CITY OF SANTA FE, NEW MEXICO

PROJECT DESCRIPTION: Sean Milks of Gravity Pad Partners, LLC, agent for St. John's College, owner, proposes to install a 75'-tall AT&T "monopine" telecommunications tower. A telecommunications waiver is requested to exceed the maximum allowable height, per Section 14-6.2(E)(8)(c).

Case number: **2020-002194-HDRB**
Project Type: HDRB

PROJECT LOCATION (S): **1160 Camino de Cruz Blanca**

OW – St. John's College Attn: Michael Duran 1160 Camino de Cruz Blanca Santa Fe, NM 87505
MichaelDuran@sjc.edu

AP – Gravity Pad Partners LLC Attn: Sean Milks 205 Tierra Corrales Corrales, NM 87048 sean@thefsg.com

PROJECT DATA:

HISTORIC DISTRICT

Don Gaspar Area ☐ Downtown and Eastside ☐ Historic Review ☑ Transition ☐ Westside-Guadalupe ☐

HISTORIC BUILDING STATUS

Non-Statused ☐ Non-Contributing ☐ Contributing ☐ Significant ☐ Landmark ☐ N/A ☑

PRIMARY ELEVATIONS: North ☐ South ☐ West ☐ East ☐ N/A ☑

PUBLICLY VISIBLE FACADE-EAST Yes ☑ No ☐

PUBLICLY VISIBLE FACADE-NORTH Yes ☑ No ☐

PUBLICLY VISIBLE FACADE-SOUTH Yes ☑ No ☐

PUBLICLY VISIBLE FACADE-WEST Yes ☑ No ☐

HISTORIC DISTRICT INVENTORY NUMBER N/A

YEAR OF CONSTRUCTION _____

PROJECT TYPE

Status ☐ Primary Elevations ☐ Remodel ☐ Demolition ☐ New ☑ Other _____

USE, EXISTING Residential ☐ Non-Residential ☑ Vacant ☐

USE, PROPOSED Residential ☐ Non-Residential ☑

HISTORIC BUILDING NAME _____

City of Santa Fe, New Mexico

memo

DATE: August 11, 2020

TO: Historic Districts Review Board Members

FROM: Lisa Gavioli Roach, Historic Preservation Division Manager

---

Case # 2020-002194-HDRB

Address: 1160 Camino de Cruz Blanca
Historic Status: N/A
Historic District: Historic Review

REFERENCE ATTACHMENTS (Sequentially):

CITY SUBMITTALS

____ **District Standards & yard wall & fence standards.**

____ **Historic Inventory Form**

____ **Zoning Review Sheet**

____ **Other:**

APPLICANT SUBMITTALS

_x_ **Proposal Letter:** Email from Sean Milks, dated August 3, 2020

_x_ **Site Plan/Floor Plan**

_x_ **Elevations**

_x_ **Photographs** (photosim images)

_x_ **Other:**
1) Location Options Map
2) Option 1: Bell Tower Structure Design (80' tall)
3) Option 2: Territoria Revival Style Watch Tower Sketch (height not specified)
4) Option 3: Monopine Design (80' tall)
5) HDRB Action Letter from the July 14, 2020 hearing
6) Exhibits A through G from the July 14th proposal

STAFF RECOMMENDATION:

Staff defers to the Board as to whether all the criteria for a waiver of the maximum allowable height have been met, per Section 14-6.2(E)(8)(c), but otherwise recommends approval of the application in compliance with 14-5.2(D) General Design Standards for all H Districts, and 14-5.2(I) Historic Review District.

BACKGROUND & SUMMARY:

1160 Camino de Cruz Blanca comprises the campus of St. John's College. On June 23, 2020, the applicant came before the HDRB to propose construction of a 75-foot-tall "monopine" telecommunications tower on the campus. The purpose of the tower is to provide improved communications capability for emergency services and first responders, as well as enhanced personal wireless service in the surrounding area. After discussing the merits of the project, the Board requested additional information regarding alternative locations that were considered and to better demonstrate that the proposal represents the least obtrusive option to close the gap in cell coverage for the area. On July 14, 2020, the applicant provided extensive additional information (see Exhibits A through G), but the Board felt that there was too much uncertainty regarding the proposed location as a result of the need for further discussion with the neighbors, that they postponed the case for up to 30 days to allow for additional time.

Now, the applicant returns to the Board to propose alternative siting and design options for the cell tower, after having made efforts to reach agreement with a group of neighbors. An agreement has not been reached; however, the following three options are presented for the Board's consideration:

1) Option 1: A "Bell Tower" design located further south from Camino de Cruz Blanca. The proposed tower is 80 feet in height and features the St. John's College name and logo. (see Option 1 design schematic in the packet).
2) Option 2: A Territorial Revival Style "watch tower" structure located slightly further south than Option 1. The design of this tower would be similar to the existing watch tower on St. John's College campus, and the height is unspecified but will attempt to match the height of surrounding trees and buildings.
3) Option 3: An 80-foot-tall "monopine" located further south and east of the originally proposed location, in an undeveloped area that the application feels would minimize its visual impact.

Under SFCC Section 14-6.2(E) Telecommunications Facilities, the Historic Districts Review Board must review the telecommunications application for compliance with the design requirements of Section 14-5.2 (Historic Districts) and relevant subsections of 14-6.2(E) and to ensure that the applicant has "demonstrated that no other less intrusive means or alternative to the proposed telecommunications facilities siting is practicable." The applicant provides lengthy discussion in the packet regarding the decision-making process around siting of the facility, which has been summarized above. In terms of the design standards of 14-5.2, staff has determined that the application is subject to the height limits and scale requirements, as specified in 14-5.2(D)(9), and that the design of the structure must adhere as closely as practicable to the design standards for the Historic Review District. The maximum allowable height for the site is 16 feet. Because the proposed tower height of 75 feet exceeds the maximum allowable height for the site, a waiver is requested as specified in Section 14-6.2(8)(c), and criteria and responses are provided below.

TELECOMMUNICATION FACILITY WAIVER CRITERIA AND RESPONSES:

A waiver is requested to exceed the maximum allowable height, which is governed by Section 14-5.2(D)(9)(c). As specified in Section 14-6.2(E)(8)(c), the HDRB may grant a waiver of the standards set forth in the Telecommunications Facilities subsection (which refers to the standards in 14-5.2 for facilities located in historic districts) if the Board finds that the applicant has demonstrated that it has explored all alternatives to the proposed site and design and if the Board finds that the applicant has met exception criteria (i), (ii), (iii), (v), and (vi) in Section 14-5.2(C)(5)(c).

Discussion of Alternatives to Proposed Site and Design:

Applicant Response: The proposed site located at 1160 Camino de Cruz Blanca, Santa Fe, NM 87505 has been identified by AT&T Mobility and FirstNet for a coverage and capacity site. This location will off load traffic from the S246 St. John's Church located at 1200 Old Pecos trail. This site is exceeding the capacity and is 1.40 miles away so the coverage is extremely lacking. Currently, wireless users in the St. John's College area are experiencing slower speeds, difficulty accessing the E911 Services, high capacity internet resources and general poor call quality, which is even more prevalent as the demand grows in the City of Santa Fe for wireless services. The proposed site will greatly improve access to Emergency 911 services, the reliability of voice and data capacity to residents and visitors in the St. John's campus area and the neighborhood near and around the College including the Santa Fe Preparatory school. Our population is turning to more and more reliance of wireless devices and AT&T/FirstNet is committed to meet that demand. The capacity improvement is necessary to improve wireless users experience when it comes to data speeds, latency, and availability of the network. The St. John's college site, allows for improved E911 service in the area which means increased reliability of access to emergency service for the health and safety of the population of Santa Fe.

Technical information supports the proposed height of the proposed antennas radius centers. The proposed site with antenna centerlines of 70' will allow for better optimization of serving the radius, permitting radio engineers to increase or decrease the service area to absorb users from, or disperse users to, nearby sites. Those using E911 services and wireless customers will benefit from improved call quality and increase data throughout speeds.

Due to the small size of the search area (approximately 0.50 miles) AT&T/FirstNet is limited to alternative wireless facility options (see search area map). Potential medium height structures within the search ring was limited to considering the potential medium height structures within the search ring AT&T/FirstNet opted to work with the St. John's College for a Monopine structure in an area of the campus that currently is not being utilized. The College was extremely concern of the lack of emergency services for an active shooter situation.

Following is a list of the sites considered:

- 3 other locations on the St. John's College Campus.
- A monopine on the Southwest area behind the dorms. The neighbors next to the site preferred the location that it currently proposed
- The existing water tank up on the hill behind the College to the East. The elevation was 200 ft higher and was creating interference with the other existing sites
- The lower east end of the College didn't not work also because of the elevation and was causing interference with the other sites. Ultimately the College preferred it in the proposed location.
- The Santa Fe Preparatory school gym. In 2011 an attempt was researched to see if a roof mounted solution would work but because of the lower elevation of the school it was not able to cover over 70% of the St. John's campus.

First, we met with the St. John's College executive board and went over the entire 250-acre campus for areas that would minimize the overall appearance of the site. We narrowed it down to 3 locations that spread across the campus. After that we met with the neighbors that land connects to the College and asked for their input. The location that was chosen by all parties was presented in June, and the three alternatives discussed further with neighors are presented now. The site options were chosen using propagation maps/studies to determine the maximum amount of coverage for a large percentage of the campus as well as the surrounding roads and neighborhoods. The site options will be able to communicate with the next closest site (S246) located at the St. John's Church. Third, we looked for any existing structures that could be used. None of the rooftops/ structures on campus were tall enough to meet the coverage objective as well as communicate with the next closest site. Lastly, the proposed options for siting will not only provide emergency services through the AT&T/FirstNet network for first responders but the tower will be able to accommodate all of the FCC wireless carriers for future use. That means we will only need one site for any future needs including 5G.

Staff Response: Staff finds that the applicant has explored alternative locations and has taken multiple factors into consideration in both siting and design.

(i) *Do not damage the character of the district*

Applicant Response: The character of the streetscape is not compromised. The applicants' fence and ground equipment will not be visible from the street. The proposed three new alternatives were selected to minimize damage to the district.

Staff Response: Staff recommends that additional testimony from the applicant is needed to determine if the criterion has been met.

(ii) *Are required to prevent a hardship to the applicant or an injury to the public welfare*

Applicant Response: The proposal will not create a hardship for the public welfare. In fact public welfare will be increased as the addition of the wireless facility will increase cell

phone users access to the E911 services and wireless communications in the surrounding neighborhoods as well as the St. John's campus.

Staff Response: Staff finds that the application would address the need for enhanced wireless coverage in the area and suggests that improved emergency communications would prevent an injury to the public welfare.

(iii) *Strengthen the unique heterogeneous character of the City by providing a full range of design options to ensure that residents can continue to reside within the historic districts*

Applicant Response: The proposed monopine would be next to and around other trees to assist with the stealth design. While the site will not be invisible it does blend in with the landscape. Due to the location of the site, well away from the main campus and tucked away between the walking trails and the North parking, this unique heterogeneous feature to blend in with the existing trees will assist with the site blending in to the landscape and to match the existing coyote fencing to hide the ground equipment which will not be seen from any streetscape. The three additional options were selected with surrounding neighborhood character in mind, as well.

Staff Response: Staff recommends that additional testimony from the applicant is needed to determine if this criterion has been met.

(v) Are due to special conditions which are not a result of the actions of the applicant

Applicant Response: There is a demonstrated need for improved wireless services and most importantly emergency 911 for the entire campus as well as the neighboring public/private streets and homes around the St. John's College. Cell phone demand has increased exponentially, access to E911 is a major concern for the safety and welfare of Santa Fe residents. Due to the lack of tall structures in the area of the St. John's College, AT&T/FirstNet Radio engineers have solved the "gap" with the proposal of the Monopine.

Staff Response: Staff finds that this criterion has been met.

(vi) Provide the least negative impact with respect to the purpose of the section as set forth in 14-5.2(A)(1).

Applicant Response: The request is in keeping with the general provisions and purpose of the section as set forth in 14-5.2(I)(1)(a&b), 14-5.2(I)(1(e), and Subsection 14-5.2(D).

Staff Response: Staff finds that the applicant has made efforts to adhere to the purpose and standards set forth in 14-5.2 but defers to the Board as to whether this criterion has been substantially met.

RELEVANT CODE CITATIONS:

14-6.2 (E) Telecommunication Facilities

(4) Planning commission and Historic Design Districts Board Review Required

(a) A *tower* or *antenna* that is not otherwise permitted or administratively approved shall be reviewed and approved by the planning commission for compliance with this section and all applicable *city* codes. In approving an *application* , the planning commission shall determine that:

(i) the *application* complies with this section;

(ii) the proposed *telecommunications facilities* are necessary to close a demonstrated significant gap in service coverage of the *applicant* based on actual signal strength data for the area where the gap is claimed and for the type of gap claimed;

(iii) the *applicant* has demonstrated that no other less intrusive means or alternative to the proposed *telecommunications facilities* siting and design is practicable;

(b) A *tower* or *antenna* that is located in a historic district and is not otherwise permitted or administratively approved shall be reviewed and approved by the historic districts review board in accordance with applicable requirements of Section 14-5.2 (Historic Districts) and in accordance with this Subsection 14-6.2(E) as follows. In approving an *application* , the historic districts review board shall determine that:

(i) the *application* complies with applicable requirements of Section 14-5.2 and this section; and

(ii) the *applicant* has demonstrated that no other less intrusive means or alternative to the proposed *telecommunications facilities* siting is practicable.

(c) The planning commission or the historic districts review board may not regulate the placement of *telecommunications facilities* on the basis of the environmental effects of radio frequency emissions where such *telecommunications facilities* comply with 47 C.F.R. 1.1310 et seq.

(d) The planning commissioner the historic districts review board may place conditions upon its approval of an *application* , but the conditions shall not prohibit or have the effect of prohibiting the provision of *telecommunication services* .

(e) A denial of an *application* or an approval of an *application* with conditions not approved by the *applicant* shall:

(i) be in writing;

(ii) cite to the administrative record; and

(iii) shall not become final until the writing is approved by the planning commission or historic districts review board, as applicable, at its next regularly scheduled meeting.

(f) The planning commission and historic districts review board shall each review *applications* submitted under this section as soon as reasonably practicable without regard to the other's schedule or decision.

(5) General Requirements

All *towers* and *antennas* , whether administratively approved or requiring planning commission or historic districts review board approval, shall comply with all applicable *city* codes and with the following:

(a) Zoning Districts; Location

Telecommunications facilities are permitted in all zoning districts in accordance with the requirements of this section. However, to the maximum extent technically feasible, *telecommunications facilities* shall be sited:

(i) on existing *structures* ;

(ii) in *nonresidential* districts; and

(iii) in C-2, I-1 and I-2 districts.

(b) Maximum Height

Telecommunications facilities located on existing *structures* shall not exceed the height of the *structure* upon which the facility is located unless otherwise allowed under this section. *Telecommunications facilities* located on new *structures* shall not exceed the maximum height for *buildings* otherwise allowed as set forth in Chapter 14 with the exception that in C-2, I-1 and I-2 districts the height limit of *telecommunications facilities* shall be one hundred feet.

(c) Aesthetic Requirements

Subject to applicable federal standards and design and safety codes, the following criteria must be met:

(i) *telecommunications facilities* shall be installed underground to the maximum extent technically feasible;

(ii) if above ground, the *telecommunications facilities* shall be designed, installed and maintained in such a manner as to minimize the visual impact upon adjacent lands, *public rights of way* and *residentially zoned property* . Acceptable methods to minimize visual impact include concealment, *screening* , camouflaging, color, materials, texture, shape, size and location;

(iii) consideration shall be given to minimize disruption to or *alteration* of the natural land forms and *landscape* ; and

(iv) permanent lighting of *telecommunications facilities* shall not be allowed unless there is no alternative available to comply with federal law, in which case all proposed lighting shall be shown in the *applicatian* . Permanent lighting shall not include equipment status indicator lights exceeding fifteen watts of power.

(d) Archaeological Requirements

Compliance with Section 14-5.3 SFCC 1987 regarding the *city's* archaeological review districts is required.

(8) Waivers

(a) The planning commission may grant a waiver of the standards set forth in this section or otherwise within its jurisdiction only if the planning commission finds that the waiver:

(i) is in the best interest of the community as a whole;

(ii) will expedite the approval of an *antenna* or *tower* ;

(iii) will not jeopardize the public health, safety and welfare, to the extent the *city* has jurisdiction;

(iv) will either mitigate the adverse visual impacts of *antenna* and *tower* proliferation or limit the need for construction of new *towers* or *antennas* ;

(v) will better serve the purposes set forth in Subsection 14-6.2(E)(1); and

(vi) if the proposed site is located in the escarpment or south central highway corridor overlay districts, that the *applicant* has demonstrated to the satisfaction of the planning commission that it has explored all alternatives to the proposed site and to the proposed design and that location outside those districts is not practicable.

(b) Factors to be considered in granting a waiver include:

(i) the design of the proposed *telecommunications facilities* , with particular reference to design elements that reduce or eliminate adverse visual impact including lighting;

(ii) the nature of uses on adjacent and nearby *properties* , including proximity to *residentially zoned property* , the BCD and historic, escarpment and south central highway corridor overlay districts;

(iii) the surrounding topography;

(iv) the surrounding vegetation;

(v) the availability of existing *towers* or other *structures* for co-location or of alternative *antenna* configurations with less visual impact;

(vi) the proposed ingress and egress; and

(vii) improved *telecommunication services* to Santa Fe residents and institutions.

(c) The historic districts review board may grant a waiver of the standards set forth in this subsection or otherwise within its jurisdiction only if the board finds that:

(i) the *applicant* has demonstrated to the satisfaction of the board that it has explored all alternatives to the proposed site in the historic district and to the proposed design; and

(ii) the conditions of Sections 14-5.2(C)(5)(c)(i) through (iii), (v) and (vi) have been met.

14-5.2(A)(1) General Purpose

In order to promote the economic, cultural, and general welfare of the people of the city and to ensure the harmonious, orderly and efficient growth and development of the city, it is deemed essential by the governing body that the qualities relating to the history of Santa Fe, and a harmonious outward appearance, which preserve property values and attract tourists and residents alike, be preserved, some of these qualities being:

(a) The continued existence and preservation of historical areas and buildings;
(b) The continued construction of buildings in the historic styles; and
(c) A general harmony as to style, form, color, height, proportion, texture and material between buildings of historic design and those of more modern design.

14-5.2(D)(9)(c) Height

(i) Official map of *building* heights in the historic districts - procedures.

A. The historic districts review board shall recommend the adoption of an official map reflecting *building* heights in the historic districts to the *governing body* . This map shall be used for the purpose of regulating *building* height in the historic districts. The map

shall be adopted at a public hearing of the *governing body* , which hearing shall be advertised in a local newspaper no less than fifteen days prior to the hearing. All affected *property owners* and *owners* of *lots* or of land within one hundred (100) feet, excluding public right-of-way, of the *property* affected shall be notified of the public hearing by first class mail, mailed at least fifteen days prior to the public hearing. The official map shall be adopted by the *governing body* by ordinance.

B. The official map of *building* heights in the historic districts may be amended from time to time. This historic districts review board shall make recommendations to the *governing body* for the amendment of the official map, at a public hearing. Such hearing shall be advertised in a local newspaper no less than fifteen days prior to the hearing.

C. The *governing body* shall hold a public hearing on any amendments to the official map. The official map, inclusive of amendments, is hereby adopted by reference and incorporated as if set out herein. Such public hearing shall be advertised in a local newspaper no less than fifteen days prior to the hearing. All affected *property owners* and *owners* of *lots* or of land within one hundred (100) feet, excluding public right-of-way, of the *property* affected shall be notified of the public hearing by first class mail, mailed at fifteen days prior to the public hearing.

D. The official map is available in the *city* planning *office* and is accessible at all reasonable times for inspection.

(ii) In exercising its authority under this section, the board shall limit the height of *structures* as set forth in this section. Heights of existing *structures* shall be as set forth on the official map of *building* heights in the historic districts.

A. If a proposed *building* has a parapet, the façade shall not be in excess of two (2) feet of the average of the height of the façades in the *streetscape* .

B. If the proposed *building* has a pitched roof, the ridge height of the proposed *building* shall not be in excess of two (2) feet of the average of the ridge height of the pitched roofs in the *streetscape* .

C. *Yard walls* and fences shall be limited to a height that does not exceed the average of the height of other *yard walls* and fences in the *streetscape* .

D. Pursuant to Section 14-7.4(C), the height of any other *structure* shall be limited to the allowable *building* height within the applicable *streetscape* , as defined in this section. (Ord. No. 2002-37 § 26)

E. The height and dimension of signage are as set forth in Section 14-8.10(H).

F. The board may increase the allowable height for proposed *buildings* and additions located on a sloping site where the difference in the natural *grade* along the *structure's* foundation exceeds two (2) feet. In no case shall the height of a façade exceed four (4) feet above the allowable height of the applicable *streetscape* measured from natural or finished *grade* , whichever is more restrictive. This increase in height shall be constructed only in the form of *building* stepbacks from the *street* .

(iii) In historic districts, height shall be the vertical distance measured between the highest part of a *structure* and the existing *grade* or finished *grade* , whichever is more restrictive, at the midpoint of the *street* facing facade, excluding *rooftop appurtenances* , the increased height of *walls* or fences over pedestrian and vehicular openings, and gates (either in opened or closed position). For *structures* which do not have *street* frontage, height shall be

determined by the facade which contains the tallest vertical distance measured between the highest part of a *structure* and the existing *grade* or finished *grade* , whichever is more restrictive. The height of *walls* and fences is measured from the *street* -facing side of the *wall* or fence. (Ord. No. 2002-37 § 27)

14-5.2(D)(9)(e) Scale

The height of a proposed *building* or addition, its façade length, and its roof form and pitch shall appear to be in proportion to the height, façade length, and roof form and pitch of *buildings* in the applicable *streetscape* , or the *building* on which the addition is proposed.

14-5.2 (F) Historic Review District

(1) Applicability

(a) The division shall review and approve or deny all *applications* for new construction, exterior alteration, and demolition of *structures* in the historic review district in accordance with the standards set forth in this section.

(b) The historic districts review board shall review and approve or deny new construction of commercial, *residential* multi-unit, public *structures* , and those *structures* requiring the Board's review as specified in Subsection 14-5.2(D)(9)(a). Approval, disapproval, or referral shall be indicated by the division on the *application* for the *building permit* and on each of the required submittals, all of which shall be signed by the division staff assigned to the review.

(2) District Standards

(a) The following structural standards shall be complied with whenever exterior features of *buildings* and other *structures* subject to public view from any public *street* , way, or other public place are erected, altered, or demolished:

(i) Slump block, stucco, or stone shall be used as exterior *wall* materials. Wood and other materials may be used for details. Aluminum siding, metal panels, mirrored glass, and unstuccoed masonry *units* or unstuccoed cement shall not be used as exterior *wall* materials; and

(ii) The color of stuccoed *buildings* shall predominantly be brown, tan, or local earth tones. This does not include chocolate brown colors or white except dull or matte off-white (yeso). Surfaces of stone shall be in the natural color. Entries and *portals* may be emphasized by the use of white or other colors or materials. Painting of *buildings* with bold repetitive patterns, or using *buildings* as signs is prohibited.

(b) It is intended that *buildings* be designed to be " *wall* dominated". "Wall dominated" means that the *building's* geometry is more defined by *walls* than by roofs. *Buildings* with flat, gabled, shed, and *hipped roofs* can be designed as "wall dominated" solutions and are allowed. However, gabled, shed and *hipped roofs* are only allowed if sufficient evidence is provided by the *applicant* showing that there are pitched roofs extant before December 12, 1983 (date of enactment) within the related *streetscape* , as viewed when standing in the public *street* in front of the site. The height of the roof above the *wall* shall be no greater than the height of the *walls* . Folded plate, hyperbolic, mansard, or red tile roofs are not allowed. Roofs in local earth tones are preferred.

(c) The use of solar and other energy collecting and conserving strategies is encouraged. The use of large glazed areas on south-facing *walls* for trombe *walls* or other solar collectors, direct gain, or other collecting purposes is allowed. When in view from any public *street* , way, or other public place, solar equipment shall be screened as follows:

(i) Raising the parapet;

(ii) Setting back from the edge of the roof;

(iii) Framing the collector with wood;

(iv) In pitched roofs, by integrating the collector into the pitch;

(v) In ground solar collectors by a *wall* or vegetation;

(vi) In *wall* collectors or *greenhouses* , by enclosing by end or other *walls* ;

(vii) Other means that screen the collector or integrate it into the overall *structure* . Non-glare materials shall be used in solar collectors.

(d) Roof-mounted mechanical, electrical and telephone equipment and other obtrusive *structures* shall be architecturally screened with opaque materials by raising the parapet, boxing in the equipment or other appropriate means. The equipment shall be of a low profile to minimize the *screening* problem.

(e) No cantilever or long apparently unsupported openings are allowed except over the projecting vigas, beams, or wood corbels or as part of the roof. The use of arches is discouraged except in freestanding *walls* .

(f) In order to emulate traditional Santa Fe architecture and construction traditions, it is intended that *structures* be designed to appear essentially as *structures* with massive *walls* which are defined as being built or appearing to be built of *adobe* construction, *wall* thickness appearing massive in relation to *wall* height, and where applicable, the depths of windows, doors and entry opening showing the massiveness of the *structure* . Solid *wall* space shall be greater in any façade than window or door space combined. Exceptions are allowed for south facing *walls* for solar equipment as provided in Subsection (F)(2)(c) of this section and under *portales* . The mass elements that make up the *building* composition shall appear as single blocks. *Buildings* with ground coverage of over twenty thousand 20,000 square feet and over one *story* shall be designed to appear more as an aggregation of smaller " *building* blocks" rather than a single large box or block. (Ord. No. 2002-37 § 28)

(g) *Walls* and fences visible from the *street* shall be built of brick, *adobe* , rock, masonry, wood, coyote fencing, wrought iron, slump block, or similar materials. *Walls* of unstuccoed concrete block or unstuccoed concrete, chain link, metal wire, or similar materials are prohibited, except where the *wall* or fence is not visible from the *street* .

(h) When parking spaces are required for commercial or multi-family *residential buildings* , they shall be placed to the rear or side of the *building* . When parking areas are visible from the *street*, they shall be screened from view by *walls* , fences, vegetation, planters, earth berms, or other means.

ROACH, LISA X.

From: Sean Milks <sean@thefsg.com>
Sent: Monday, August 3, 2020 11:01 AM
To: ROACH, LISA X.
Subject: FW: St. John's // Tower Email 1 of 3
Attachments: St Johns Cell Tower_Sketches_07-22-20 option 1 Bell tower with screening.pdf; St Johns Cell Tower_Sketches_07-22-20 option 2 Territotial watch tower.pdf; St Johns Cell Tower_Sketches_07-22-20 option 3 monopine.pdf

CAUTION: This email originated from outside of the organization. Do not click links or open attachments unless you recognize the sender and know the content is safe.

Lisa,

I will be sending you 3 e-mails outlining 3 options for the historic board to review. We hired a local architect to assist with coming up with some sketch renderings. Please see the below that was sent to the neighbors. Please confirm all 3 e-mails.

Please see attached maps (email 1 of 3 to be sent due to large files) with design criteria for each of the locations with my short narrative of the rational for selecting one type for each location.

Proposed Mono-pine in original location meets technical requirements but is close to the road and view corridor.

Option 1 - Moves the site away from the road and out of the field of vision for the travel public along Camino De las Cruz Blanca. The structure with the St Johns name and logo is a community feature that would offer a minimal visual impact and a bell could be added to mimick the other bell towers at the college and at the property to the West. There are lots of bell towers in Santa Fe so this feature and design would mirror others types of bell towers and screen the antennas with fiberglass (the panel with the college name and logo) so it would not appear to be a wireless facility.

Option 2 - Territorial style watch tower. This would mimick the existing lookout tower at the college and would appear to have a minimal visual impact as it would attempt top match an existing vertical structure that exceeds the height of the surround trees and buildings. The antennas and radios wold be visible and not screened but painted white to match the facade of the tower. This location is setback further from the road and away from all residential lots in the vicinity.

Option 3 - Moves the site away from the road and locates it in a undeveloped landscape to minimize the visual impact with the surrounding trees.

Each of these designs and locations offer different challenges compared to the original location but all are feasible from a construction standpoint and meet the technical requirements of the wireless carriers. So I hope this helps provide some direction in providing feedback to the project. Gravity Pad has engage a local architect (info below) to help with the delivery of a product that I'm hoping the community will embrace and help to collaborate for an outcome that is mutually beneficial for all stakeholders.

Hoopes + Associates Architects, 333 Montezuma Ave. Suite 200, Santa Fe, NM 87501 505.986.1010,

studio@hoopesarchitects.com

Please let me know if anyone has any questions on these specifics.

Thanks,

Sean
602-330-5150

MAP OF PROPOSED LOCATIONS

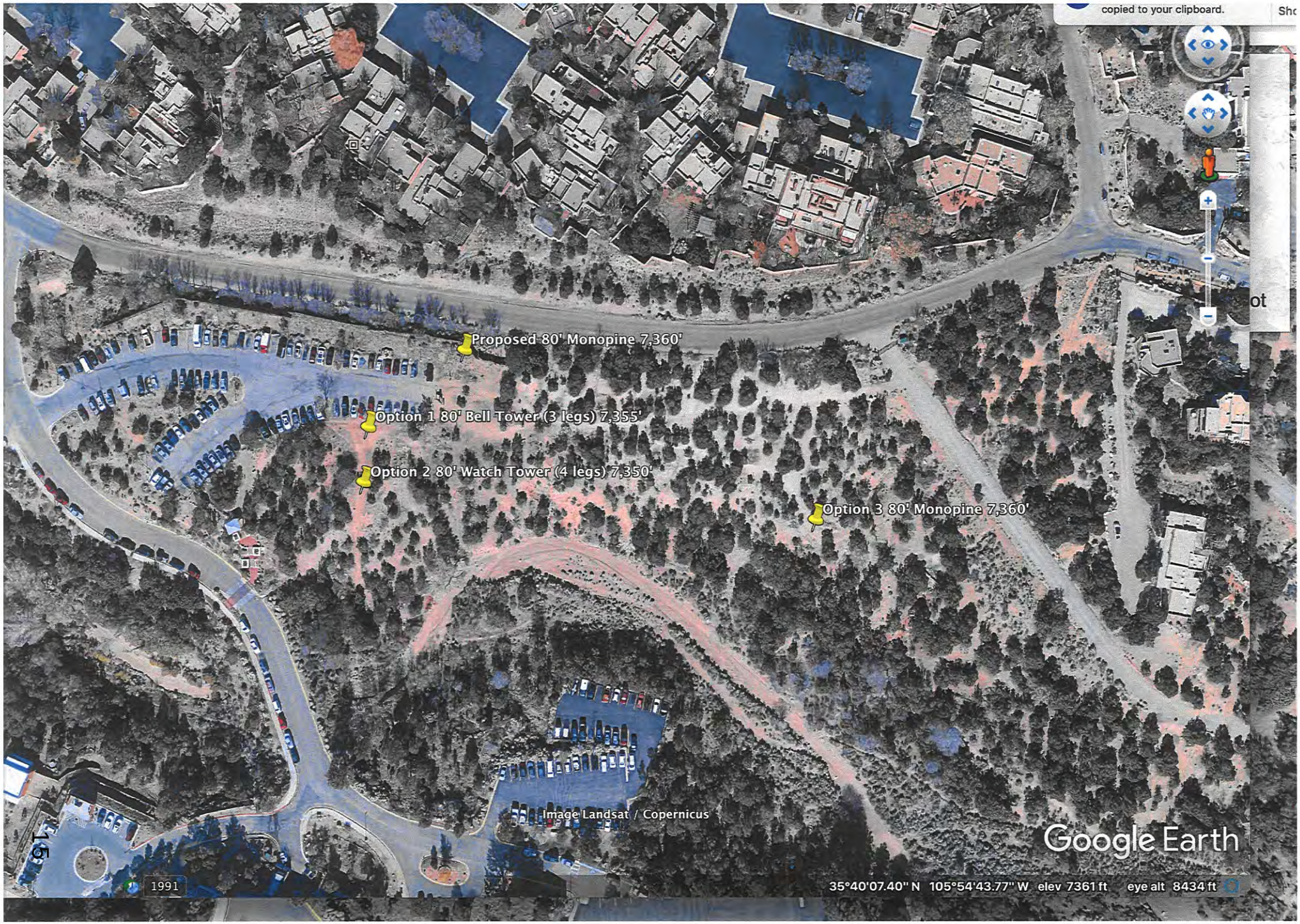

OPTION #1

ELEVATION KEY NOTES: (#)

1. (E) BUILDING (BEHIND)
2. (N) ± 80' TALL 3-LEGGED BELL TOWER WITH RF TRANS T MATERIAL EXTERIOR FINISH. PAINTED TO MATCH EXISTING BUILDING
3. (N) AT&T ANTENNAS, RRHs, & PIPE MOUNTS (INSIDE 3-LEGGED BELL TOWER)
4. (N) RAYCAP DC9-48-60-24-8C-EV DC/FIBER SURGE PROTECTOR (INSIDE 3-LEGGED BELL TOWER)
5. (N) TOWER LEGS (TYP. OF 3)
6. (N) GPS ANTENNA MOUNTED ON (N) CABINET (BEHIND)
7. (N) CABINET (WIC) (NOT VISIBLE IN THIS VIEW)
8. (N) DC BACK-UP GENERATOR (NOT VISIBLE IN THIS VIEW)
9. (N) METER, DISCONNECT, & NEMA 4 J-BOX MOUNTED ON (N) H-FRAME
10. (N) 11' TALL CMU WALLED COMPOUND & CAP ON TOP. PAINTED TO MATCH EXISTING BUILDING
11. (N) DOGHOUSE (BEYOND)
12. (N) RF TRANSPARENT Bell

NOTE: VEGETATION IS NOT SHOWN FOR CLARITY

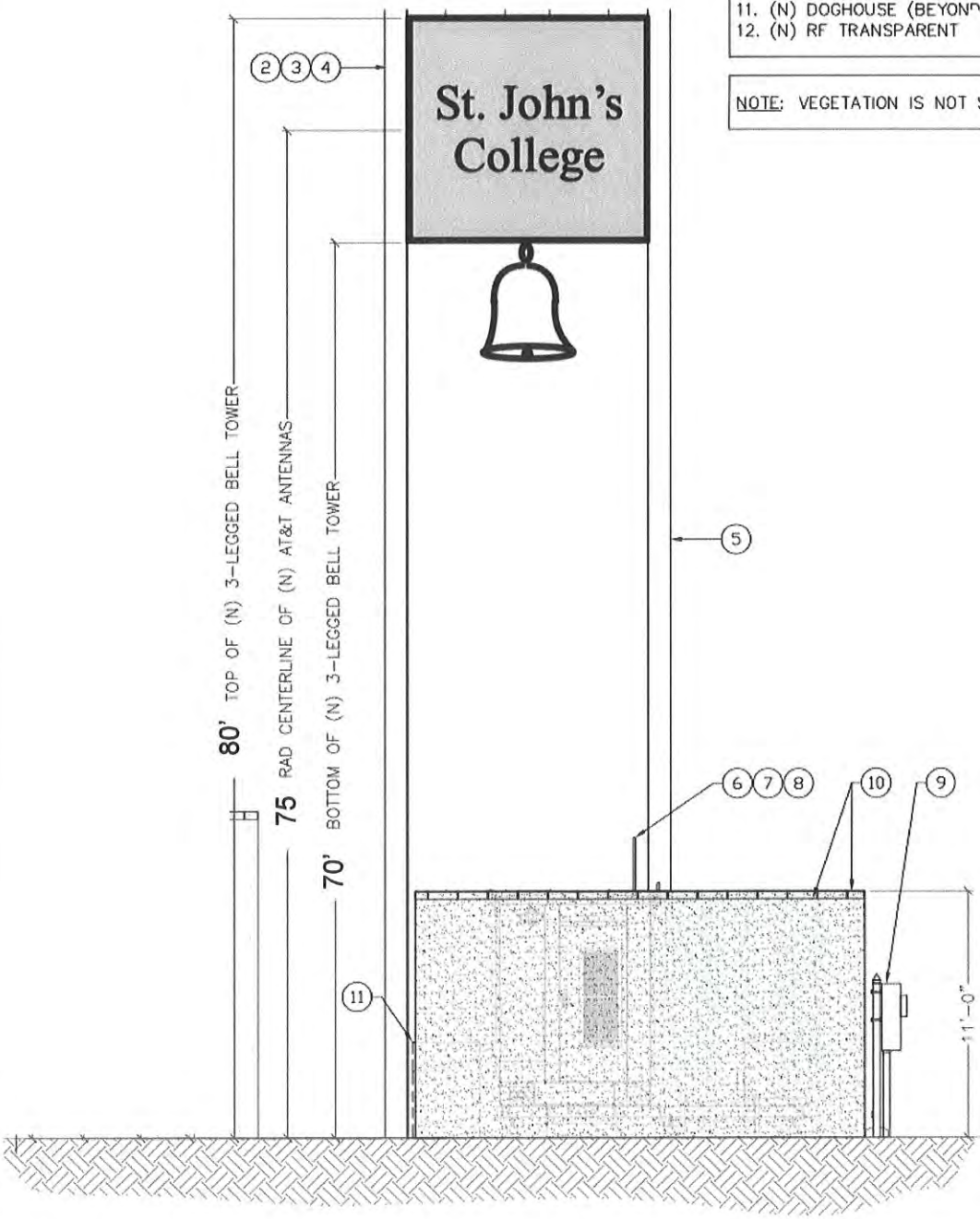

SOUTHEAST ELEVATION

22"x34" SCALE: 1/4" = 1'-0"
11"x17" SCALE: 1/8" = 1'-0"

4' 3' 2' 1' 0' 4'

OPTION #2

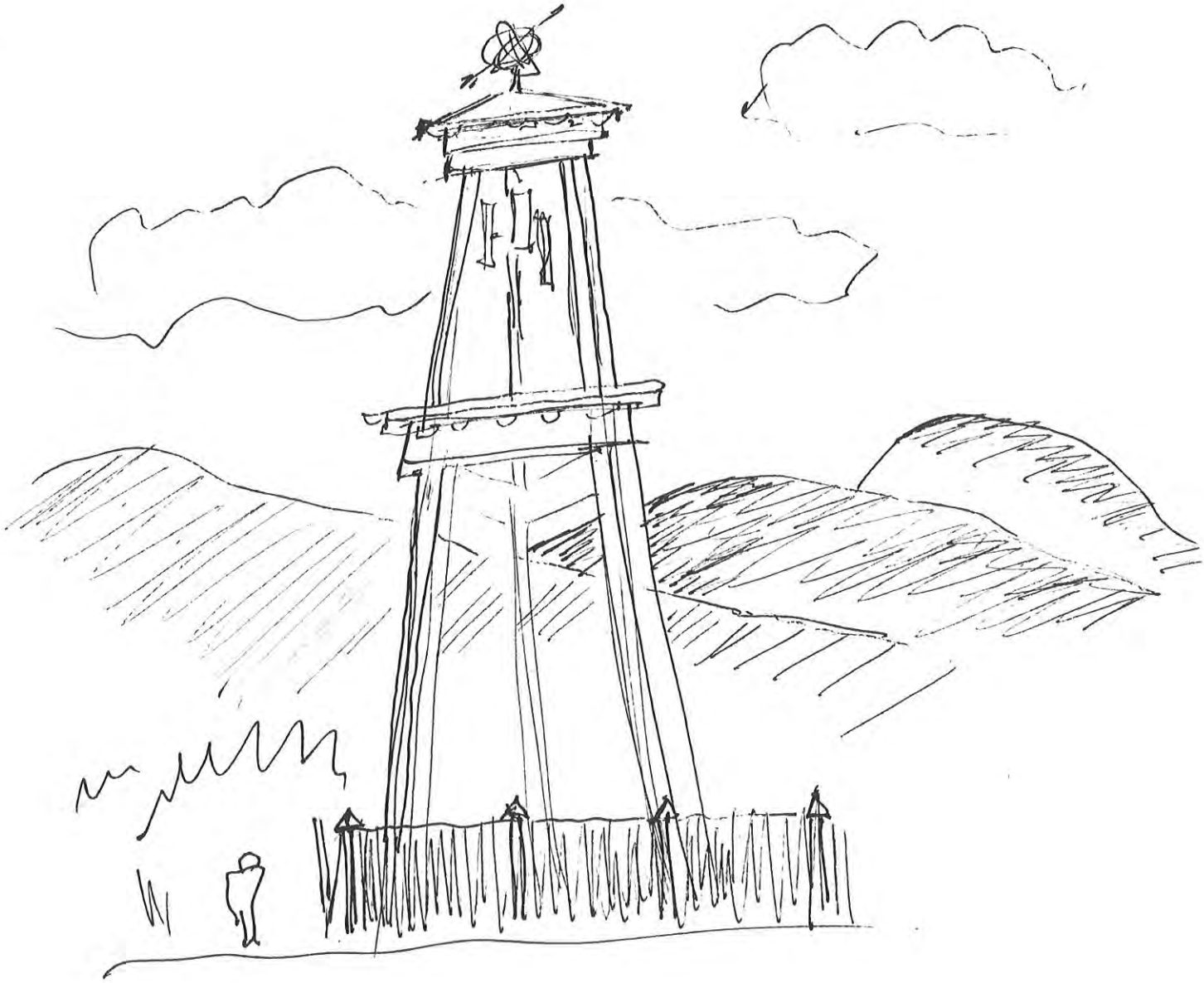

FREEING
MINDS
A Campaign
for
St. Aidan's
College

OPTION 3

CELL TREES
Celebrating 20 Years in business

5401 S. CANADA PLACE
TUCSON, AZ 85706
PH: (520) 663-1330

SJC PARKING LOT

SITE #: NML00255
MONOPINE

CELL TREES, INC. Job:
20-027

LOCATION:

1160 CAMINO DE CRUZ BLANCA
SANTA FE, NM 87505
SANTA FE COUNTY

DRAWING INDEX

MP-1 TITLE SHEET
MP-2 NOTES & SPECIFICATIONS
MP-3 ELEVATION VIEWS
MP-4 DETAILS
MP-5 NOT USED
MP-6 NOT USED
MP-7 BRANCH LAYOUT

AT&T

CELL TREES

JOB #: 20-027

VECTOR ENGINEERS
1535 N. Greenfield Rd., Suite 112
Mesa, AZ 85205
(480) 649-3514
www.vectorsve.com

DATE: 5/7/2020	DESIGNED: ALL	DRAFTER: ALL

REVISIONS

REV	DATE	DESCRIPTION

TITLE SHEET

SJC PARKING LOT
SITE #: NML00255
80'-0" MONOPINE
1160 CAMINO DE CRUZ BLANCA
SANTA FE, NM 87505
SANTA FE COUNTY

A1212-0449-201

MP-1 REV 0

Copyright © 2020 Vector Structural Engineering of Arizona, LLP. This drawing contains proprietary information belonging to Vector Structural Engineering of Arizona, LLP, and may be neither wholly nor partially copied or reproduced without the prior written permission of Vector Structural Engineering of Arizona, LLP.

SUMMARY OF SPECIAL INSPECTION		
NO.	DESCRIPTION OF TYPE OF INSPECTION REQ'D, LOCATION, REMARKS, ETC.	INSPECTION TYPE
1.	REQUIRED INSPECTIONS FOR SOIL/FOUNDATION:	
A.	VERIFY EXCAVATIONS ARE EXTENDED TO PROPER DEPTH AND THAT THE MATERIALS BELOW FOUNDATIONS ARE ADEQUATE TO ACHIEVE THE DESIGN BEARING CAPACITY	PERIODIC
B.	PERFORM CLASSIFICATION AND TESTING OF COMPACTED FILL MATERIALS	PERIODIC
C.	VERIFY USE OF PROPER MATERIALS, DENSITIES AND LIFT THICKNESSES DURING PLACEMENT AND COMPACTION OF COMPACTED FILL.	CONTINUOUS
D.	PRIOR TO PLACEMENT OF COMPACTED FILL, INSPECT SUBGRADE AND VERIFY THAT IT HAS BEEN PREPARED PROPERLY	PERIODIC
2.	REQUIRED INSPECTIONS FOR CAST-IN-PLACE DEEP FOUNDATION ELEMENTS	
A.	INSPECT DRILLING OPERATIONS AND MAINTAIN COMPLETE AND ACCURATE RECORDS FOR EACH ELEMENT	CONTINUOUS
B.	VERIFY PLACEMENT LOCATIONS AND PLUMBNESS, CONFIRM ELEMENT DIAMETERS, BELL DIAMETERS (IF APPLICABLE), LENGTHS, EMBEDMENT INTO BEDROCK (IF APPLICABLE) AND ADEQUATE END-BEARING STRATA CAPACITY. RECORD CONCRETE OR GROUT VOLUMES.	CONTINUOUS
3.	REQUIRED INSPECTIONS FOR CONCRETE CONSTRUCTION	
A.	INSPECT REINFORCEMENT AND VERIFY PLACEMENT	PERIODIC
B.	INSPECT ANCHORS CAST IN CONCRETE – PLUMBNESS, ORIENTATION, TOP AND BOTTOM TEMPLATES ARE INSTALLED, AND THAT THE MINIMUM EMBEDMENT SPECIFIED BY THE FOUNDATION DESIGNER IS MET.	PERIODIC
C.	VERIFY USE OF REQUIRED DESIGN MIX AND COMPLIANCE WITH ACI 318-14	PERIODIC
D.	PRIOR TO CONCRETE PLACEMENT, FABRICATE SPECIMENS FOR STRENGTH TESTS, PERFORM SLUMP AND AIR CONTENT TESTS, AND DETERMINE THE TEMPERATURE OF THE CONCRETE.	CONTINUOUS
E.	INSPECT CONCRETE PLACEMENT FOR PROPER APPLICATION TECHNIQUES.	CONTINUOUS
F.	VERIFY MAINTENANCE OF SPECIFIED CURING TEMPERATURE AND TECHNIQUES	PERIODIC
G.	INSPECT FORMWORK FOR PROPER SHAPE, LOCATION AND DIMENSIONS.	PERIODIC
4.	BOLTING:	
A.	ANCHOR BOLTS SHALL BE INSTALLED WITH A LOCKING MECHANISM AND BE TIGHTENED TO A "SNUG TIGHT" CONDITION PER AISC	PERIODIC
B.	ALL HIGH STRENGTH BOLTS, A325, SHALL BE TIGHTENED TO THE TURN OF NUT METHOD AS DEFINED BY AISC	PERIODIC
5.	FIELD WELDING:	
A.	NO FIELD WELDING SHALL BE PERMITTED EXCEPT WHERE SPECIFICALLY NOTED ON THE STRUCTURAL DRAWINGS	<= 5/16, PERIODIC > 5/16, CONTINUOUS
6.	SHOP WELDING:	
A.	ALL SHOP WELDING OF STRUCTURAL STEEL SHALL BE PERFORMED BY AN APPROVED FABRICATOR'S SHOP PER 2015 IBC SECTION 1704.2.5	PROVIDE CERTS.
B.	ALL WELDED CONNECTIONS SHALL CONFORM WITH THE LATEST EDITION OF THE AMERICAN WELDING SOCIETY (AWS) D1.1	N/A
C.	WELD ELECTRODES SHALL BE LOW HYDROGEN E70XX U.N.O.	N/A
D.	VISUAL INSPECTION OF ALL WELDS SHALL BE PERFORMED BEFORE GALVANIZING.	INSPECT AND REPORT
E.	IF A WELD IS IN QUESTION PER THE VISUAL INSPECTION THEN IT SHALL BE TESTED USING AN APPROPRIATE TEST, I.E. DIE PENETRATION, MAGNETIC PARTICLE, U.T., ETC.	INSPECT AND REPORT

SPECIAL INSPECTION:

1. SPECIAL INSPECTION SHALL BE PERFORMED ACCORDING TO 2015 IBC.
2. THE SPECIAL INSPECTOR SHALL BE APPROVED BY THE LOCAL JURISDICTION TO PERFORM THE TYPES OF INSPECTION REQUIRED.
3. ANY SUPPORT SERVICE PERFORMED BY THE ENGINEER OF RECORD DURING CONSTRUCTION SHALL BE DISTINGUISHED FROM INSPECTION SERVICES WHICH ARE FURNISHED BY OTHERS. THESE SUPPORT SERVICES PERFORMED BY THE ENGINEER OF RECORD ARE ONLY FOR THE PURPOSE OF ASSISTING IN THE QUALITY CONTROL AND IN ACHIEVING CONFORMANCE WITH THE CONTRACT DOCUMENTS. THIS SUPPORT DOES NOT GUARANTEE THE CONTRACTOR'S PERFORMANCE AND SHALL NOT BE CONSTRUED AS SUPERVISION OF CONSTRUCTION.

GENERAL DESIGN NOTES:

STRUCTURAL DESIGN IS BASED ON THE INTERNATIONAL BUILDING CODE, 2015 EDITION AND THE TIA-222-G STANDARD

DESIGN LOADS:

WIND: WIND SPEED = 115 MPH (3-SEC GUST) PER THE ASCE 7-10 STANDARD
RISK CATEGORY / STRUCTURE CLASS: II
EXPOSURE: C
TOPOGRAPHIC CATEGORY: 1
CREST HEIGHT: 0 FT

ICE: NONE PER THE TIA-222-G STANDARD

SEISMIC:
IMPORTANCE FACTOR: 1.00
RISK CATEGORY / STRUCTURE CLASS: II
MAPPED SPECTRAL RESPONSE ACCELERATIONS:
S_S = 0.445g, S_1 = 0.133g
SITE CLASS: D
SPECTRAL RESPONSE COEFFICIENTS:
S_{DS} = 0.428g, S_{D1} = 0.201g
SEISMIC DESIGN CATEGORY: D
BASIC SEISMIC-FORCE-RESISTING-SYSTEM:
TELECOMMUNICATION TOWER: STEEL POLE
SEISMIC BASE SHEAR, V: 4.0 K
SEISMIC RESPONSE COEFFICIENT, Cs: 0.110
RESPONSE MODIFICATION FACTOR, R: 1.5
ANALYSIS PROCEDURE: EQUIVALENT LATERAL FORCE

STRUCTURAL STEEL:

1. POLYGONAL MONOPOLE SHAFT STEEL SHALL CONFORM w/ ASTM A572 GR. 65, U.N.O.
2. BASEPLATE STEEL SHALL CONFORM w/ ASTM A572 GR. 50, U.N.O.
3. ALL STEEL PIPE SHALL CONFORM w/ ASTM A53 GR. B (35 KSI), U.N.O.
4. ALL STEEL RECTANGULAR TUBES (HSS) SHALL CONFORM w/ ASTM A500 GR. B (46 KSI), U.N.O.
5. REINFORCED PORT STEEL SHALL CONFORM w/ ASTM A572 GR. 65, U.N.O.
6. ALL OTHER STEEL SHAPES & PLATES SHALL CONFORM w/ ASTM A36, U.N.O.
7. ALL BOLTS FOR STEEL-TO-STEEL CONNECTIONS SHALL CONFORM w/ ASTM F3125 GR. A325, U.N.D.
8. ALL ANCHOR BOLTS SHALL CONFORM w/ ASTM A615 GR. 75, U.N.O.
9. ALL WELDING SHALL BE PERFORMED BY CERTIFIED WELDERS IN ACCORDANCE w/ THE LATEST VERSION OF THE AMERICAN WELDING SOCIETY AWS D1.1. STEEL WELDS SHALL BE BY E70XX LOW HYDROGEN ELECTRODES, U.N.O.
10. ALL STEEL SURFACES SHALL BE GALVANIZED IN ACCORDANCE w/ ASTM A123 AND ASTM F2329 STANDARDS.
11. ALL BOLTED CONNECTIONS SHALL BE TIGHTENED PER THE "TURN-OF-NUT" METHOD AS DEFINED BY AISC.

BASE DESIGN REACTIONS:

MOMENT, M = 3,720 K-FT (1.0 WIND)
SHEAR, V = 63.0 K (1.0 WIND)
AXIAL, P = 42.9 K (1.2 DEAD)

DISCLAIMERS:

1. ALL STRUCTURAL COMPONENTS TO BE CONNECTED TOGETHER SHALL BE COMPLETELY FIT UP ON THE GROUND OR OTHERWISE VERIFIED FOR COMPATIBILITY PRIOR TO LIFTING ANY COMPONENT INTO PLACE. REPAIRS REQUIRED DUE TO FIT-UP OR CONNECTION COMPATIBILITY PROBLEMS AFTER PARTIAL ERECTION ARE THE FINANCIAL RESPONSIBILITY OF THE CONTRACTOR.
2. WHERE EFFECTIVE PROJECTED AREAS (EPA) ARE USED, IT IS THE RESPONSIBILITY OF OTHERS TO VERIFY INSTALLED EQUIPMENT DOES NOT EXCEED LISTED EPA.

AT&T

CELL TREES

JOB #: 20-027

VECTOR ENGINEERS
1635 N. Greenfield Rd., Suite 112
Mesa, AZ 85205
(480) 846-3514
www.vectorse.com

DATE: 5/7/2020 | DESIGNED: ALL | DRAFTER: ALL

REVISIONS

REV	DATE	DESCRIPTION

NOTES & SPECIFICATIONS

SJC PARKING LOT
SITE #: NML00255
80'-0" MONOPINE
1180 CAMINO DE CRUZ BLANCA
SANTA FE, NM 87505
SANTA FE COUNTY

A1212-0449-201

MP-2 REV 0

Copyright © 2020 Vector Structural Engineering of Arizona, LLP. This drawing contains proprietary information belonging to Vector Structural Engineering of Arizona, LLP, and may be neither wholly nor partially copied or reproduced without the prior written permission of Vector Structural Engineering of Arizona, LLP.

DESIGN LOADING:
ANTENNA C.L. @ 80'-0" A.G.L.:
SAME AS DESIGN LOADING @ 70'-0" A.G.L.
ANTENNA C.L. @ 70'-0" A.G.L.:
(12) 96"x20"x9", 115 lb PANEL ANTENNAS
(15) 28"x19"x11", 75 lb RRUs
(3) 29"x16"x11", 40 lb SURGE/RAYCAP/J-BOX
(3) 9'-6" T-ARM MOUNTS BY OTHERS
ANTENNA C.L. @ 60'-0" A.G.L.:
SAME AS DESIGN LOADING @ 70'-0" A.G.L.
ANTENNA C.L. @ 50'-0" A.G.L.:
SAME AS DESIGN LOADING @ 70'-0" A.G.L.

APPURTENANCES (2)
N.T.S.

MONOPOLE SECTION CHART[2]					
SECTION	LENGTH	øTOP[4]	øBOTTOM[4]	THICKNESS	WEIGHT[1,3]
1	40'-0"	25.60"	38.00"	1/4"	3.7 K
2	39'-3"	35.87"	48.04"	3/8"	8.5 K

NOTES:
1. SECTION WEIGHT INCLUDES PORTS. LOWEST SECTION WEIGHT INCLUDES BASEPLATE WEIGHT.
2. DESIGN TAPER = 0.31 in/ft.
3. WEIGHTS LISTED IN THIS CHART ARE RAW STEEL WEIGHTS. FINAL WEIGHTS MAY BE UP TO 22% GREATER DUE TO GALVANIZING AND OTHER MISCELLANEOUS ITEMS.
4. DIAMETER OF POLE SECTIONS AT LAP SPLICES MAY BE ADJUSTED BY UP TO 0.06" TO ACCOUNT FOR THE THICKNESS OF COATINGS.

POLE SECTIONS (3)
N.T.S.

NOTE: BRANCHES ARE SHOWN FOR ILLUSTRATIVE PURPOSES ONLY AND ARE NOT NECESSARILY SHOWN TO SCALE.

NOTE: MONOPOLE DESIGNED FOR 10'-0" FUTURE EXTENSION

NOTE: ANTENNAS & PORTS ARE SHOWN FOR ILLUSTRATIVE PURPOSES & ARE NOT NECESSARILY SHOWN TO SCALE

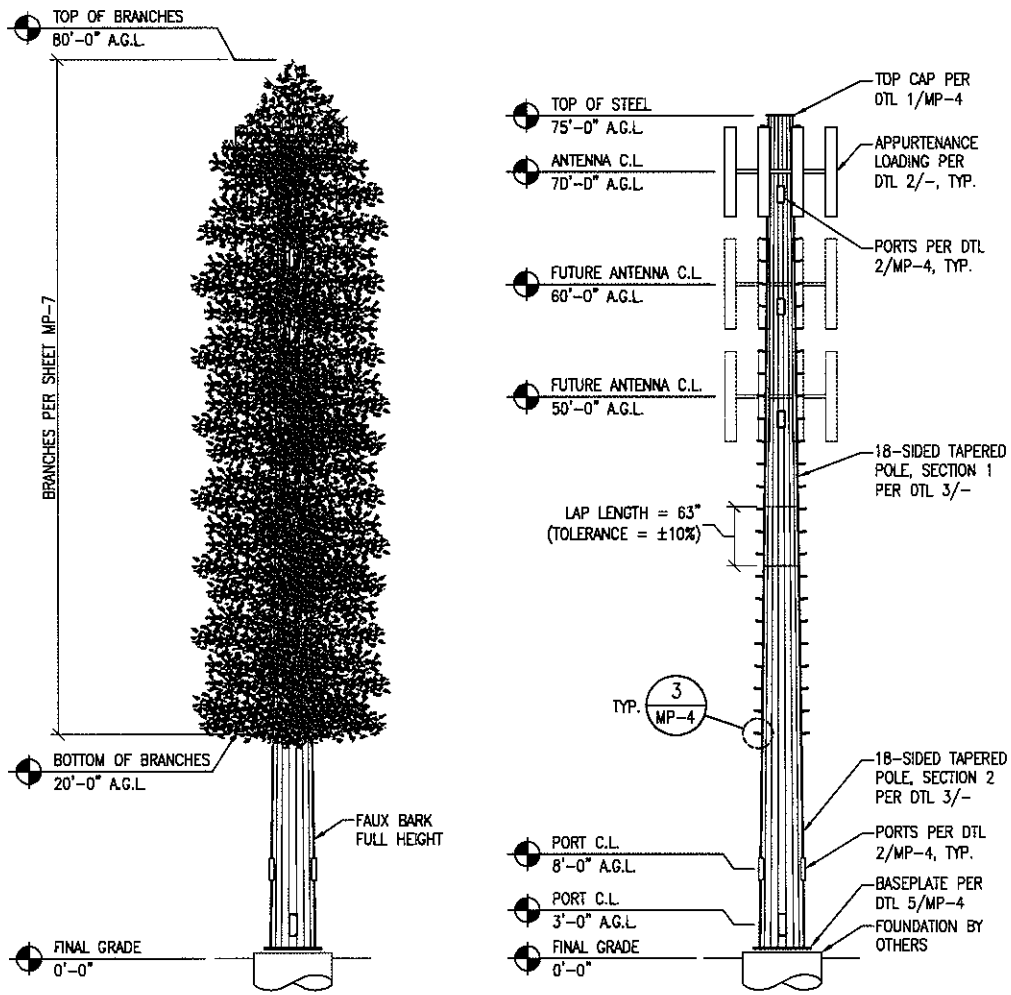

ELEVATIONS (1)
N.T.S.

AT&T

CELL TREES

JOB #: 20-027

VECTOR ENGINEERS
1535 N. Greenfield Rd., Suite 112
Mesa, AZ 85205
(480) 649-3514
www.vectorsve.com

DATE: 5/7/2020	DESIGNED: ALL	DRAFTER: ALL

REVISIONS

REV	DATE	DESCRIPTION

ELEVATION VIEWS

SJC PARKING LOT
SITE #: NML00255
80'-0" MONOPINE
1180 CAMINO DE CRUZ BLANCA
SANTA FE, NM 87505
SANTA FE COUNTY

A1212-0449-201

MP-3 REV 0

Copyright © 2020 Vector Structural Engineering of Arizona, LLP. This drawing contains proprietary information belonging to Vector Structural Engineering of Arizona, LLP, and may be neither wholly nor partially copied or reproduced without the prior written permission of Vector Structural Engineering of Arizona, LLP.

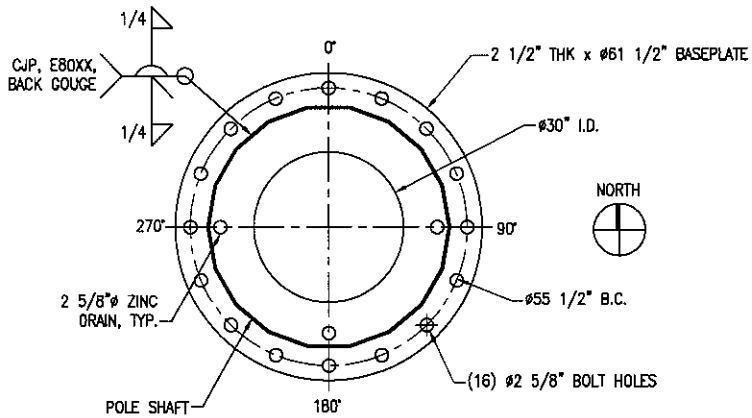

BASEPLATE N.T.S. (5)

A WEEP HOLE OR OTHER MEANS OF PREVENTING WATER BUILD UP SHALL BE PROVIDED FOR BRANCH RECEIVERS

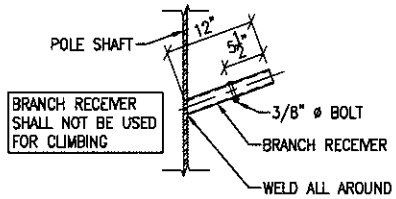

BRANCH RECEIVER SHALL NOT BE USED FOR CLIMBING

BRANCH RECEIVERS ARE BY CELL TREES AND SHOWN FOR REFERENCE ONLY. COMPONENTS ARE NOT REVIEWED BY VECTOR.

BRANCH RECEIVER N.T.S. (3)

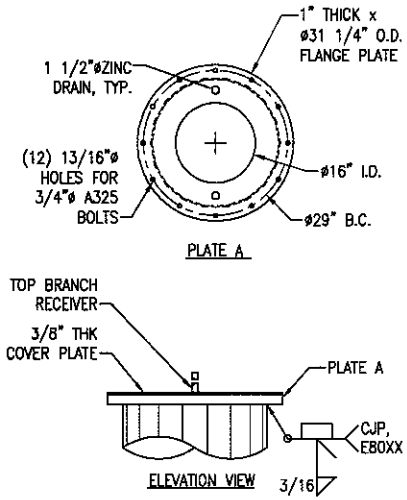

TOP CAP N.T.S. (1)

PORT SCHEDULE					
C.L. ELEV.	PORT SIZE (B x H)	D	T	QTY	AZIMUTH(S)
68'-0"	6"x18"	2"	1/2"	3	0°/120°/240°
58'-0"	6"x18"	2"	1/2"	3	0°/120°/240°
48'-0"	6"x18"	2"	1/2"	3	0°/120°/240°
8'-0"	9"x24"	6"	3/4"	2	90°/270°
3'-0"	9"x24"	6"	3/4"	2	0°/180°

PORT SCHEDULE N.T.S. (4)

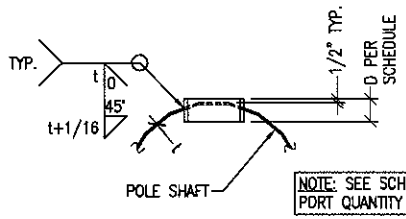

NOTE: SEE SCHEDULE FOR PORT QUANTITY & AZIMUTHS

SECTION VIEW

NOTE: SEE DTL 3/MP-3 FOR POLE SHAFT THICKNESS, t

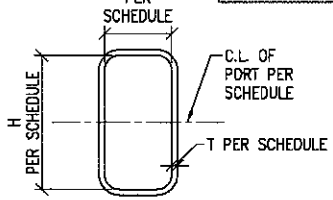

ELEVATION VIEW

PORTS N.T.S. (2)

AT&T

CELL TREES

JOB #: 20-027

VECTOR ENGINEERS

1635 N. Greenfield Rd., Suite 112, Mesa, AZ 85205 (480) 648-3514 www.vectorse.com

DATE: 5/7/2020	DESIGNED: ALL	DRAFTER: ALL

REVISIONS

REV	DATE	DESCRIPTION

DETAILS

SJC PARKING LOT
SITE #: NML00255
80'-0" MONOPINE
1160 CAMINO DE CRUZ BLANCA
SANTA FE, NM 87505
SANTA FE COUNTY

A1212-0449-201

MP-4 REV 0

Copyright © 2020 Vector Structural Engineering of Arizona, LLP. This drawing contains proprietary information belonging to Vector Structural Engineering of Arizona, LLP, and may be neither wholly nor partially copied or reproduced without the prior written permission of Vector Structural Engineering of Arizona, LLP.

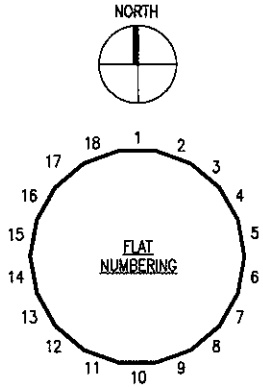

T = BRANCH TIPS
BB = BOOM BRANCH
X = VACANT RECEIVER
2 = 2'-0" BRANCH
3 = 3'-0" BRANCH
4 = 4'-0" BRANCH
5 = 5'-0" BRANCH
6 = 6'-0" BRANCH
7 = 7'-0" BRANCH
8 = 8'-0" BRANCH
9 = 9'-0" BRANCH
10 = 10'-0" BRANCH
TOTAL BRANCH COUNT = 199
AVERAGE = 3.06 BRANCHES PER FOOT

BRANCH LAYOUT

Elev	Deg	1	2	3	4	5	6	7	8	9	10	11	12	13	14	15	16	17	18
75.00	90									5									
75.00	30		3						3						3				
74.25	30			X	6					X	6					X	6		
73.50	15						6						6						6
72.50	15		8						8						8				
71.50	15					8						8						8	
70.50	15			6						6						6			
70.00			BB		BB				BB		BB				BB		BB		
69.00	0	6						6						6					
68.00	0				8						8						8		
67.00	15						6						6						6
66.00	15		6						6						6				
65.00	15					8						8						8	
64.00	15			6						6						6			
63.00	15	6						6						6					
62.00	15				8						8						8		
60.75	15						6						6						6
60.00																			
59.25	15		6						6						6				
58.00	15					8						8						8	
57.00	15			6						6						6			
56.00	15	6						6						6					
55.00	15				8						8						8		
54.00	15						6						6						6
53.00	15		6						6						6				
52.00	15					8						8						8	
50.75	15			6						6						6			
50.00																			
49.25	15	8						8						8					
48.25	15				8						8						8		
47.00	15						6						6						6
46.00	15		8						8						8				
45.00	15					8						8						8	
44.00	15			6						6						6			
43.00	15						6						6						6
42.00	15	8						8						8					
41.00	15				8						8						8		
40.00	15						6						6						6
39.00	15		8						8						8				
38.00	15				8						6						6		
37.00	15					8						8						8	
36.00	15			6						6						6			
35.00	15	8						8						8					
34.00	15				8						8						8		
33.00	15					6						6						6	
32.00	15						8						8						8
31.00	15		8						8						8				
30.00	15					8						8						8	
29.00	15			10						10						10			
28.00	15		6						6						6				
27.00	15	8						8						8					
25.75	15				10						10						10		
24.50	15						10						10						10
23.25	15		10						10						10				
22.00	15					10						10						10	
21.00	15			10						10						10			
20.00	15	10						10						10					

AT&T

CELL TREES

JOB #: 20-027

VECTOR ENGINEERS
1635 N. Greenfield Rd., Suite 112
Mesa, AZ 85205
(480) 549-3514
www.vectorse.com

DATE: 5/7/2020	DESIGNED: ALL	DRAFTER: ALL

REVISIONS

REV	DATE	DESCRIPTION

BRANCH LAYOUT

SJC PARKING LOT
SITE #: NML00255
80'-0" MONOPINE
1160 CAMINO DE CRUZ BLANCA
SANTA FE, NM 87505
SANTA FE COUNTY

A1212-0449-201

MP-7

REV 0

Copyright © 2020 Vector Structural Engineering of Arizona, LLP. This drawing contains proprietary information belonging to Vector Structural Engineering of Arizona, LLP, and may be neither wholly nor partially copied or reproduced without the prior written permission of Vector Structural Engineering of Arizona, LLP.

PUBLIC COMMENTS

July 31, 2020

VIA EMAIL

Kevin Winner,
Winner Management, Inc.
PO Box 2755
Corrales, NM 87048
kevin@winnermanagement.net

Dear Kevin,

Thank you for taking the time to come up from Albuquerque to conduct the "walkabout" and show us Gravity Pad's "alternatives" for the 75 foot tower currently proposed for the parking lot immediately adjoining Camino Cruz Blanca. However the neighbors attending see all four "sites" as being essentially in the same location with the same drawbacks, i.e. the tower's proposed 75 foot height however disguised. Thus we continue to oppose the construction of the 75 foot tower whether built on the proposed location or any one of the "alternative" sites.

Very truly yours,

Robert Snow, Stephen Durkovich, Steve Flance
Hannah McCaughey, Phillip Stern, James Polk
Darryl Coleman

cc *via email*

Sean Milks
Dan Esquibel
Santa Fe Historic Review Board
Madeleine Carey

PUBLIC COMMENTS

July 31, 2020

VIA EMAIL

City of Santa Fe Historic Review Board
P. O. Box 909
Santa Fe, NM 87504-0909
landusepubliccomment@santafenm.gov
lxrouch@santafenm.gov

Re: St. John's Tower

Members of the Board:

As invited by the Santa Fe Historic Review Board, residents of the surrounding neighborhoods met with Kevin Winner, one of the partners of Gravity Pad LLC, on Monday afternoon July the 27th for a "walk-around" to demonstrate Gravity Pad's alternatives to the 75-foot monopine wireless communication tower proposed for construction immediately adjacent to Camino Cruz Blanca.

On the Friday before the meeting, Sean Milks from Gravity Pad informed Hannah McCaughey, who had set up the meeting, that only 3 alternatives site would be considered and no other sites would be discussed. However, two of the three "alternative sites" that Gravity Pad was offering in fact had already been presented to the Historic Review Board in Gravity Pad's initial submission. The "third" site was within approximately 100 feet of Gravity Pad's first and second alternatives. All were located on essentially the same 2 acres of the St. John's campus when St. John's has 250 acres to choose from. All were essentially close and in clear view of Camino Cruz Blanca by passersby in their cars and hikers on the adjoining trails. All an eyesore to the surrounding terrain and hiking paths. Each "alternative" maintains the proposed 75 foot tower height. The design alternatives to the tower were presented only as "potential" and do not alter its fundamental defect, i.e. the tower's proposed 75 foot height.

As a consequence, the "walkabout" while cordial was not productive of a true alternative. We continue to oppose the 75 foot tower whether built at the currently proposed location or the 3 "alternative" sites. Nevertheless we thank Kevin Winner for taking the time to come up from Albuquerque to conduct the "walkabout" and show us Gravity Pad's "alternatives."

Very truly yours,

Robert Snow, Stephen Durkovich, Steve Flance
Hannah McCaughey, Phillip Stern, James Polk,
Darryl Coleman

cc *via email*

Sean Milks
Kevin Winner
Dan Esquibel
Madeleine Carey

City of Santa Fe, New Mexico

200 Lincoln Avenue, P.O. Box 909, Santa Fe, N.M. 87504-0909
www.santafenm.gov

Alan Webber, Mayor

Councilors:
Signe I. Lindell, Mayor Pro Tem, District 1
Renee Villarreal, District 1
Michael J. Garcia, District 2
Carol Romero-Wirth, District 2
Roman "Tiger" Abeyta, District 3
Chris Rivera, District 3
Jamie Cassutt-Sanchez, District 4
JoAnne Vigil Coppler, District 4

PROJECT DESCRIPTION: Sean Milks of Gravity Pad Partners, LLC, agent for St. John's College, owner, proposes to install a 75'-tall AT&T "monopine" telecommunications tower. A telecommunications waiver is requested to exceed the maximum allowable height, per Section 14-6.2(E)(8)(c).

Case number: **2020-002194-HDRB**
Project Type: HDRB

PROJECT LOCATION (S): 1160 Camino de Cruz Blanca

OW – St. John's College Attn: Michael Duran 1160 Camino de Cruz Blanca Santa Fe, NM 87505
MichaelDuran@sjc.edu

AP – Gravity Pad Partners LLC Attn: Sean Milks 205 Tierra Corrales Corrales, NM 87048 sean@thefsg.com

BOARD ACTION

This is to certify that the Historic Districts Review Board (HDRB) acted on your request at their hearing on July 14, 2020. The decision of the Board was to postpone the case for at least 30 days to allow the applicant additional time to work with neighbors in determining alternative siting for the proposed cell tower. This action was taken with the understanding that the applicant has agreed to toll the "shot clock" for the telecommunications application, which is subject to Federal Communications Commission regulations in addition to the Santa Fe City Code. For further information please call 955-6605.

Sincerely,

Lisa Gavioli Roach

Lisa Gavioli Roach
Historic Preservation Division Manager

NOTE: Applicant can use this action letter to apply for construction permit, but the permit shall not be released until the end of the appeal period which starts on the date of filing of the Findings and Conclusions in the City Clerk's office (SFCC 14-3.17(D)). Your permit will be denied if any changes on plans that were not approved by the HDRB or if conditions of approval are not met. **Please attach copies of this letter to all sets when submitting for construction permits.**

Gravity Pad Partners, LLC.
PO Box 2755
Corrales, New Mexico 87048

6/26/2020

City of Santa Fe Historic Districts Review Board

Re Case 2020-002194-HDRB Reponse for additional information for application for a Telecommunications Facility located at the St. John's College – 1160 Camino de Cruz Blanca, Santa Fe, NM 87505 – AT&T/FirstNet NML0255

Dear HDRB,

The following is a response from the HDRB video conference that was held on June 23rd, 2020.

The board requested additional radio frequency data to justify the proposed request. I have attached a before and after radio frequency propagation study (**Labeled exhibit A**) that clearly shows the absolute need for coverage in the area.

The second item that the board requested to see if the other locations that we researched and why we couldn't located it in another area. The attached (**exhibit B**) is a google earth map showing all of the other locations that we researched and ultimately why each did not work.

- Santa Fe Prep School, elevation is 7,267. We tried a monopine and also looked at the gym rooftop. The elevation was too low and line of site of our St. John's Church site (S246).
- St. John's West dorm location, elevation is 7,373. We proposed a monopine behind the dorms and the student body voted it down and the neighbors to the west requested another location.
- St. John's East dorm location, elevation is 7,396. We proposed a monopine behind the dorms and the dumpsters. This location was rejected by the St. John's college for various reasons.
- The existing Water tank, elevation 7,455. This was rejected by AT&T because the elevation was too high and the signal would interfere with other sites in the area. It was also partially block by a hill.

The third item that the board requested was a picture of another monopine. The attached (**Exhibit C**) is a picture of a recent monopine. This specific monopine is 100 ft tall but is very similar to what we are proposing.

The fourth item that the board requested proof that we actually tried to locate the site in other places. (**Exhibit D**) is an old survey from the West dorm. (**Exhibit E**) is another site plan/survey for the Santa Fe prep school.

The fifth item is in response of our applications not conforming to the City of Santa Fe Section 14-5.2 and with section 14-6.2(e). The original letter submitted to the board outlines in detail all of the other items as it relates to section 14-5.2 of the ordinance. (**Exhibit F**) demonstrates that the entire search ring area is in fact R-1 or R-1PUD. All properties within the area have the same zoning designation. No alternative locations offer preferable zoning.

The final item is (**Exhibit G**) which is the exact specifications of the proposed monopine. It will outline great detail how well made this monopine will be including showing the future use of the tower for the other FCC wireless carriers as well as any Fire/Police equipment.

We look forward to the next meeting on July 14th and if the board requests any additional information before then please feel free to reach out via phone or e-mail.

Sincerely,

Sean Milks
Sean@TheFSG.com
602-330-5150

"EXHIBIT A"

AT&T indoor signal strength (RSRP) without NML00255

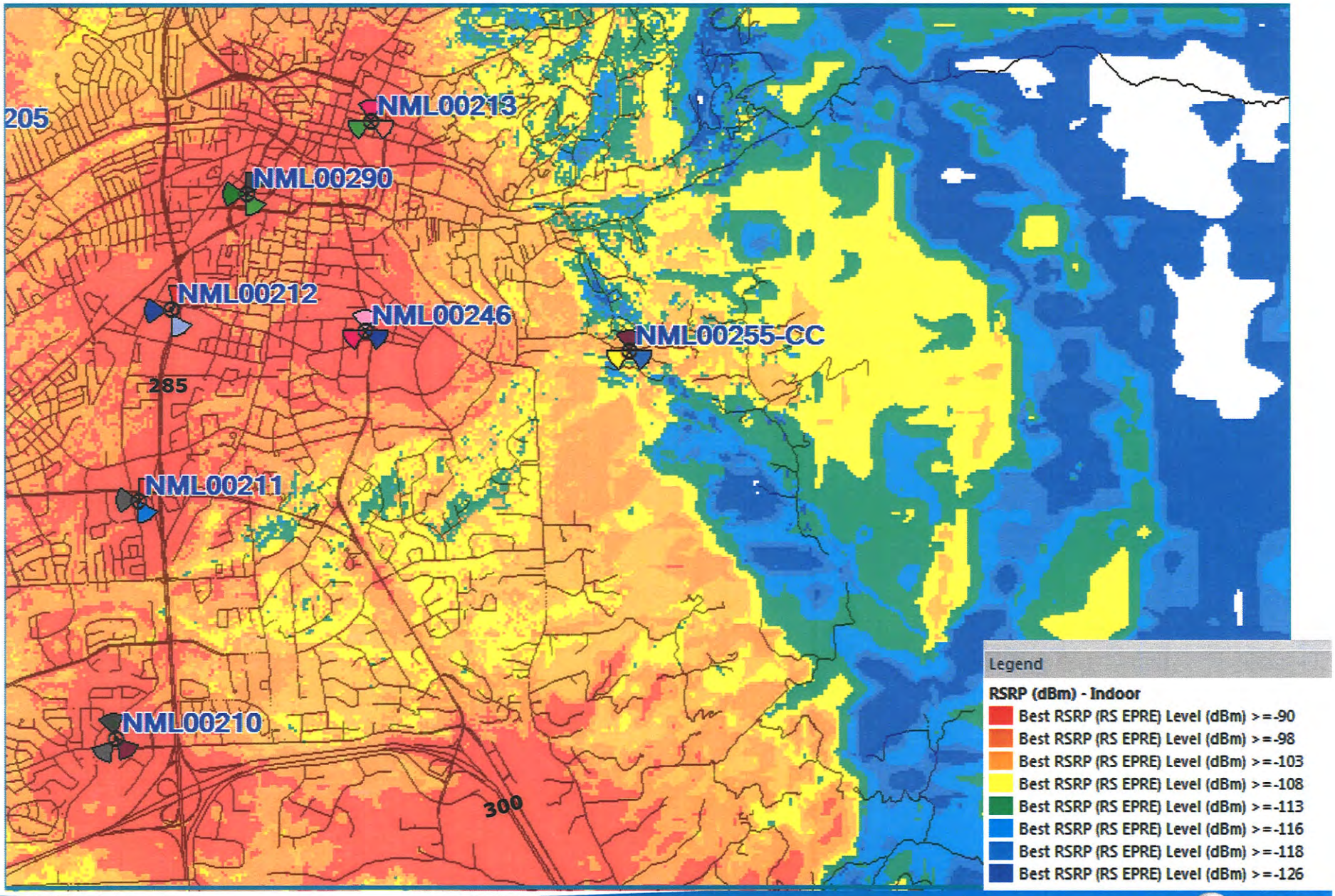

© 2006 AT&T Knowledge Ventures. All rights reserved.
AT&T is a registered trademark of AT&T Knowledge Ventures.

at&t

"EXHIBIT A"

AT&T indoor signal strength (RSRP) with NML00255

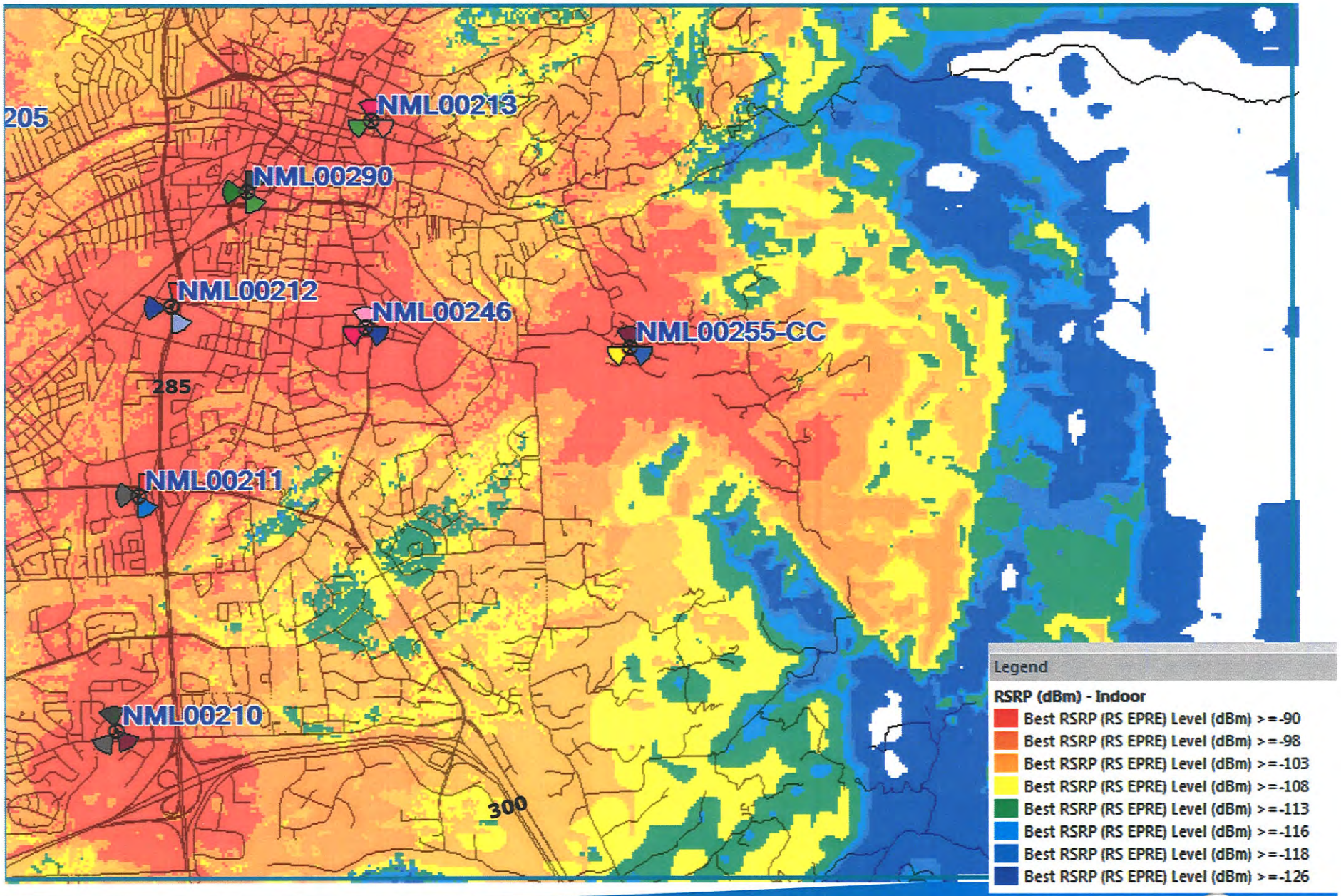

© 2006 AT&T Knowledge Ventures. All rights reserved.
AT&T is a registered trademark of AT&T Knowledge Ventures.

at&t

EXHIBIT B

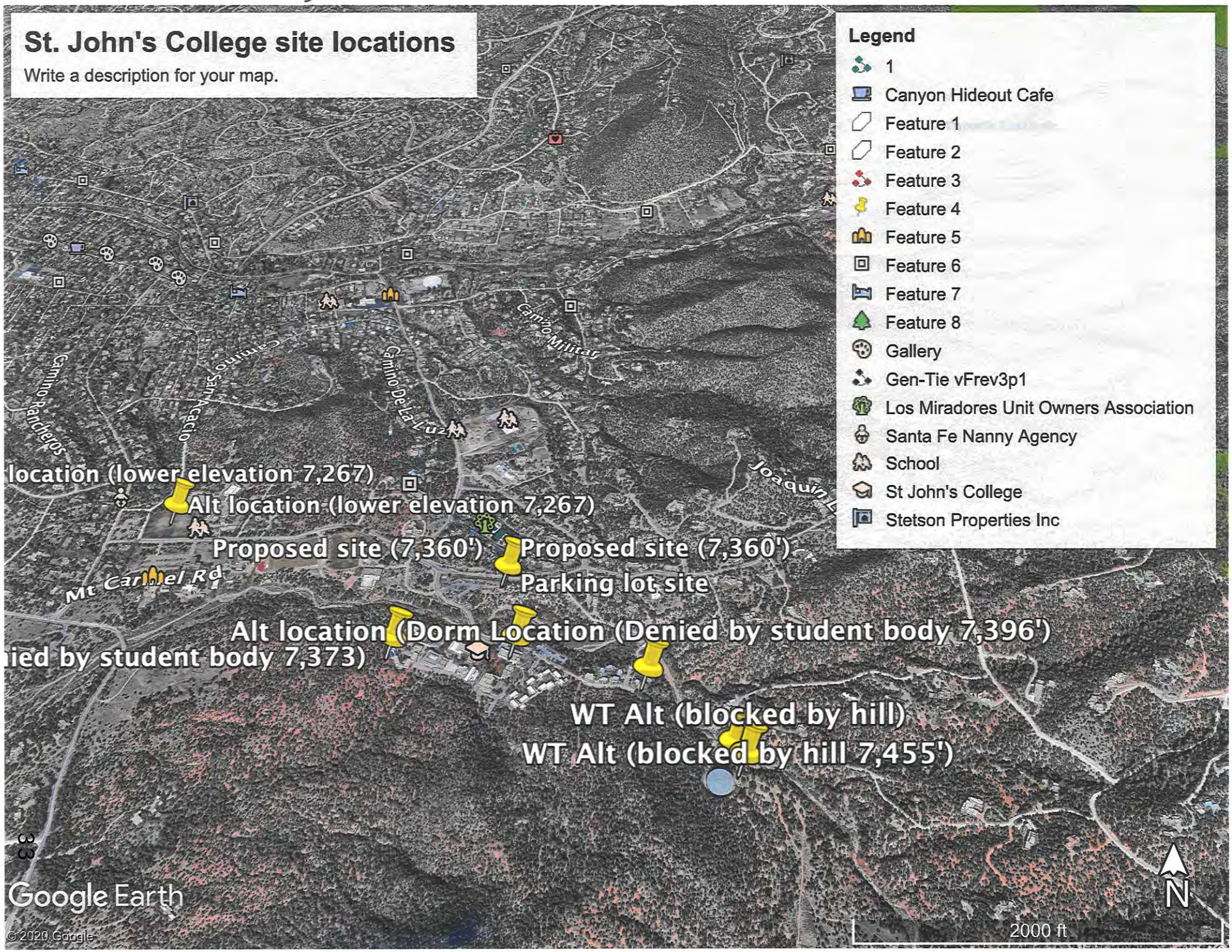
St. John's College site locations
Write a description for your map.
Legend
1
Canyon Hideout Cafe
Feature 1
Feature 2
Feature 3
Feature 4
Feature 5
Feature 6
Feature 7
Feature 8
Gallery
Gen-Tie vFrev3p1
Los Miradores Unit Owners Association
Santa Fe Nanny Agency
School
St John's College
Stetson Properties Inc
Camino Rancheros
Camino San Acacio
Camino De La Luz
Camino Militar
Joaquin
Mt Carmel Rd
location (lower elevation 7,267)
Alt location (lower elevation 7,267)
Proposed site (7,360')
Proposed site (7,360')
Parking lot site
Alt location (Dorm Location (Denied by student body 7,396')
ied by student body 7,373)
WT Alt (blocked by hill)
WT Alt (blocked by hill 7,455')
Google Earth
© 2020 Google
2000 ft
N

"EXHIBIT C"

"EXHIBIT D"

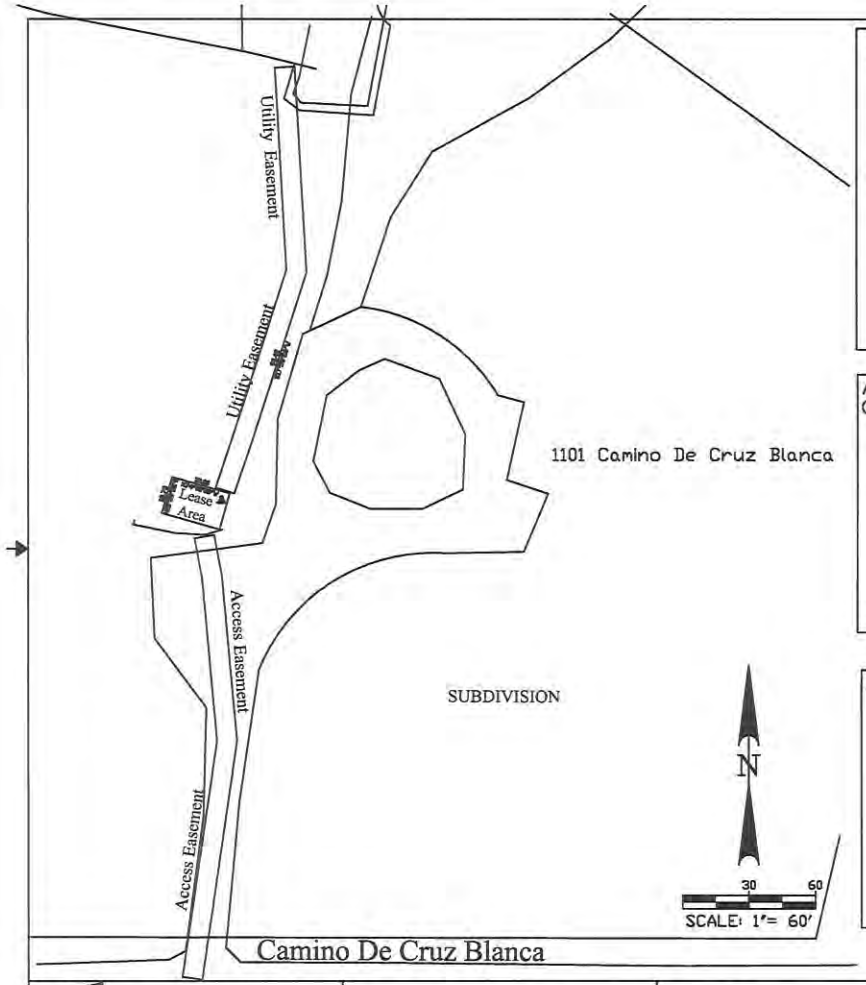

LEASE AREA LAND DESCRIPTION

TBD UPON APPROVAL OF LANDLORD

ACCESS EASEMENT CENTERLINE DESCRIPTION

TBD UPON APPROVAL OF LANDLORD

1035

UTILITY EASEMENT DESCRIPTION

TBD UPON APPROVAL OF LANDLORD

AT&T LEASE AREA SURVEY COMPRISING OF A PORTION OF SANTA FE PREP SCHOOL, CITY OF SANTA FE SANTA FE COUNTY, NEW MEXICO

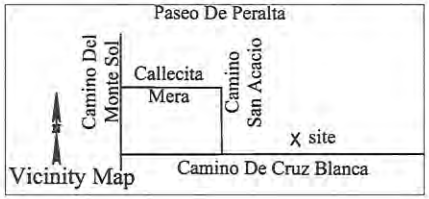

1. WARRANTY DEED.
2. LAND DIVISION PLAT

NOTE: TITLE HAS BEEN PROVIDED FOR THIS SURVEY AS OF 06-21-2008.

BASIS OF BEARINGS AND DATUM NOTE

1.) ALL DISTANCES ARE GROUND DISTANCES AND GRID BEARINGS.
2.) PROJECT CONTROL INFORMATION:
HORIZONTAL DATUM: NAD83 (CORS96)
VERTICAL DATUM: NAVD 88 (GEOID03)

I, TIMOTHY SOLINSKI, A NEW MEXICO PROFESSIONAL SURVEYOR NO. 17531, DO HEREBY CERTIFY THAT THIS LEASE AREA SURVEY PLAT AND THE ACTUAL SURVEY ON THE GROUND UPON WHICH IT IS BASED WERE PERFORMED BY ME OR UNDER MY DIRECT SUPERVISION; THAT I AM RESPONSIBLE FOR THIS SURVEY, THAT THIS SURVEY MEETS THE MINIMUM STANDARDS FOR SURVEYING IN NEW MEXICO; AND THAT IT IS TRUE AND CORRECT TO THE BEST OF MY KNOWLEDGE AND BELIEF. I FURTHER CERTIFY THAT THIS SURVEY IS NOT A LAND DIVISION OR SUBDIVISION AS DEFINED IN THE NEW MEXICO SUBDIVISION ACT AND THAT THIS INSTRUMENT IS A LEASE AREA SURVEY FOR USE IN GRANTING A NEW LEASE AREA.

TIMOTHY SOLINSKI
NMPLS 17531
03-20-2008

CIVE
11200 WESTHEIMER
SUITE 890
HOUSTON, TEXAS 77042
PH: 281.870.8727
FAX: 281.870.8728

CIVE JOB NUMBER: TBD

SITE NUMBER: S255
SITE NAME: Santa Fe Prep School
1101 Camino De Cruz Blanca
Santa Fe, NM

at&t

NO.	DATE	REVISIONS	BY	CHK'D	APP'D
0	TBD	ISSUED FOR ZONING	RJS	SW	SW
A	TBD	ISSUED FOR ZONING REVIEW	RJS	SW	SW

SCALE AS SHOWN | DESIGNED BY: SW | DRAWN BY: RJS

NEW MEXICO LAND SERVICES
1705 Celina Court
Rio Rancho, NM 87124
(505) 239-8505

Job Number 113

AT&T WIRELESS

SITE NO.	DRAWING NUMBER	REV
S255	NM-255-	A

SCALE IS BASED ON 11"x17" "Tabloid" SIZE

"EXHIBIT E"

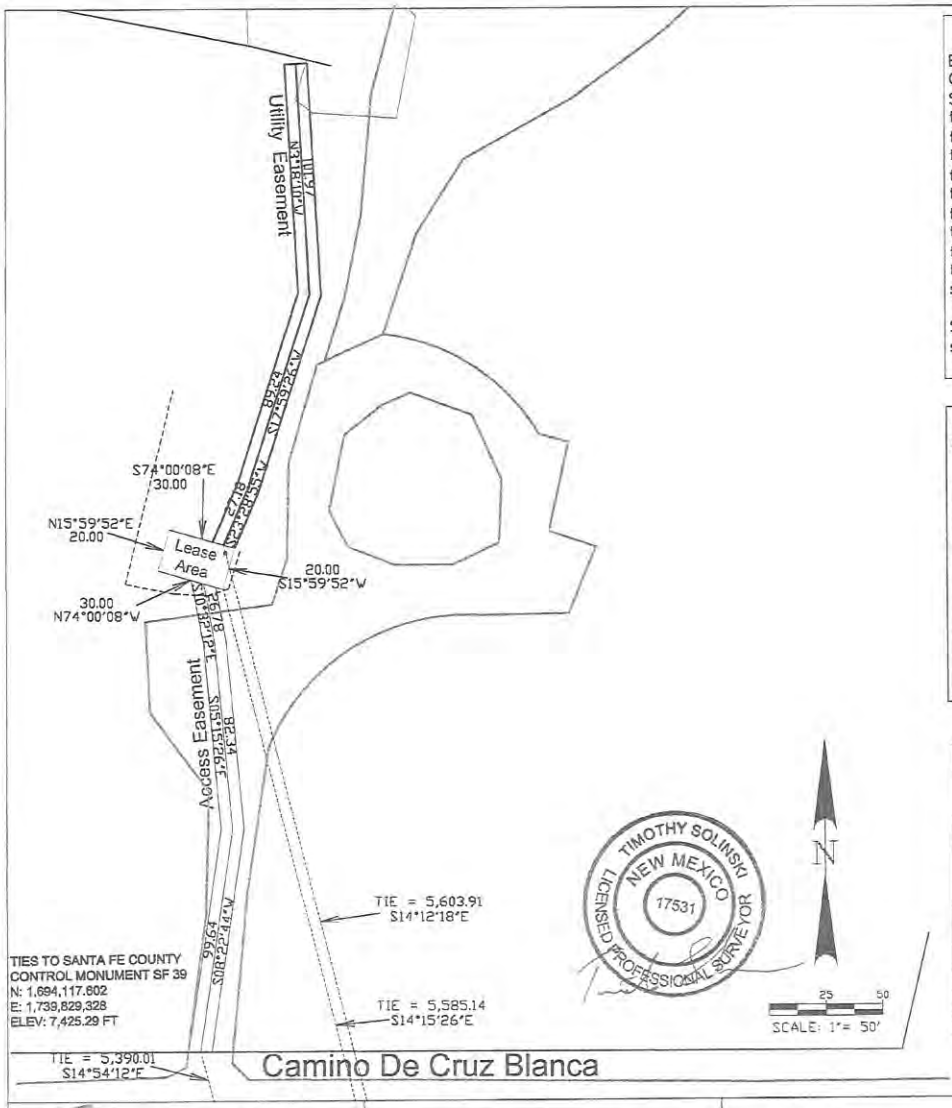

LEASE AREA LAND DESCRIPTION

BEGINNING at a point whence Santa Fe County Control monument SF 39 bears, S14°15'26""E a distance of 5,585.14 feet to the Point of Beginning for lease parcel thence N74°00'08"W a distance of 30 feet to the southwest corner of lease area, thence N15°59'52"E a distance of 20 feet to the northwest corner of lease area, thence S74°00'08"E a distance of 30 feet to the northeast corner of lease area, thence S15°59'52"W a distance of 20 feet to the point of beginning, point being the southeast corner of Lease Parcel.

Said tract contains 0.01377 acres (600 sq.ft.), more or less.

ACCESS EASEMENT CENTERLINE DESCRIPTION

A 20 foot wide strip of land being 10 feet on each side of the following described denterline:
BEGINNING at a point whence Santa Fe County Control monumnet SF 39 bears S14°54'12"E a distance of 5,390.01 feet, thence N08°22'44"E a distance of 99.64 feet, thence N05°15'26"W a distance of 82.34 feet, thence N10°32'12"W a distance of 26.78 to the point of terminus and the south line of a 20'x30' Lease Area.

UTILITY EASEMENT DESCRIPTION

A 5 foot wide strip of land being 2.5 feet on each side of the following described centerline:
Beginning at point whence Santa Fe County Control monument SF 39 bears S14°12'18"E a distance of 5,603.91 feet; thence N23°28'55"E a distance of 27.18 feet, thence N17°59'26"E a distance of 89.24 feet; thence N03°18'10"W a distance of 101.97 feet to the point of ending.

AT&T LEASE AREA SURVEY COMPRISING OF A PORTION OF SANTA FE PREP SCHOOL, CITY OF SANTA FE SANTA FE COUNTY, NEW MEXICO

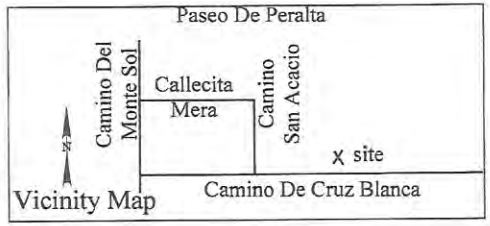

NOTE: NO TITLE HAS BEEN PROVIDED FOR THIS SURVEY AS OF 12-16-2008.

BASIS OF BEARINGS AND DATUM NOTE

1.) ALL DISTANCES ARE GROUND DISTANCES AND GRID BEARINGS.
2.) PROJECT CONTROL INFORMATION:
HORIZONTAL DATUM: NAD83
VERTICAL DATUM: NAVD 88

I, TIMOTHY SOLINSKI, A NEW MEXICO PROFESSIONAL SURVEYOR NO. 17531, DO HEREBY CERTIFY THAT THIS LEASE AREA SURVEY PLAT AND THE ACTUAL SURVEY ON THE GROUND UPON WHICH IT IS BASED WERE PERFORMED BY ME OR UNDER MY DIRECT SUPERVISION; THAT I AM RESPONSIBLE FOR THIS SURVEY, THAT THIS SURVEY MEETS THE MINIMUM STANDARDS FOR SURVEYING IN NEW MEXICO; AND THAT IT IS TRUE AND CORRECT TO THE BEST OF MY KNOWLEDGE AND BELIEF. I FURTHER CERTIFY THAT THIS SURVEY IS NOT A LAND DIVISION OR SUBDIVISION AS DEFINED IN THE NEW MEXICO SUBDIVISION ACT AND THAT THIS INSTRUMENT IS A LEASE AREA SURVEY FOR USE IN GRANTING A NEW LEASE AREA.

TIMOTHY SOLINSKI
NMPLS 17531
~~03-20-2008~~ 12-17-2008

CIVE
11200 WESTHEIMER
SUITE 890
HOUSTON, TEXAS 77042
PH: 281.870.8727
FAX: 281.870.8728
CIVE JOB NUMBER: TBD

SITE NUMBER: S255
SITE NAME: Santa Fe Prep School
1101 Camino De Cruz Blanca
Santa Fe, NM

at&t

NO.	DATE	REVISIONS	BY	CHK'D	APP'D

SCALE: AS SHOWN | DESIGNED BY: SW | DRAWN BY: RJS

NEW MEXICO LAND SERVICES
1705 Celina Court
Rio Rancho, NM 87124
(505) 239-6505
Job Number 113

AT&T WIRELESS

SITE NO.	DRAWING NUMBER	REV
S255	NM-255-	A

"EXHIBIT F"

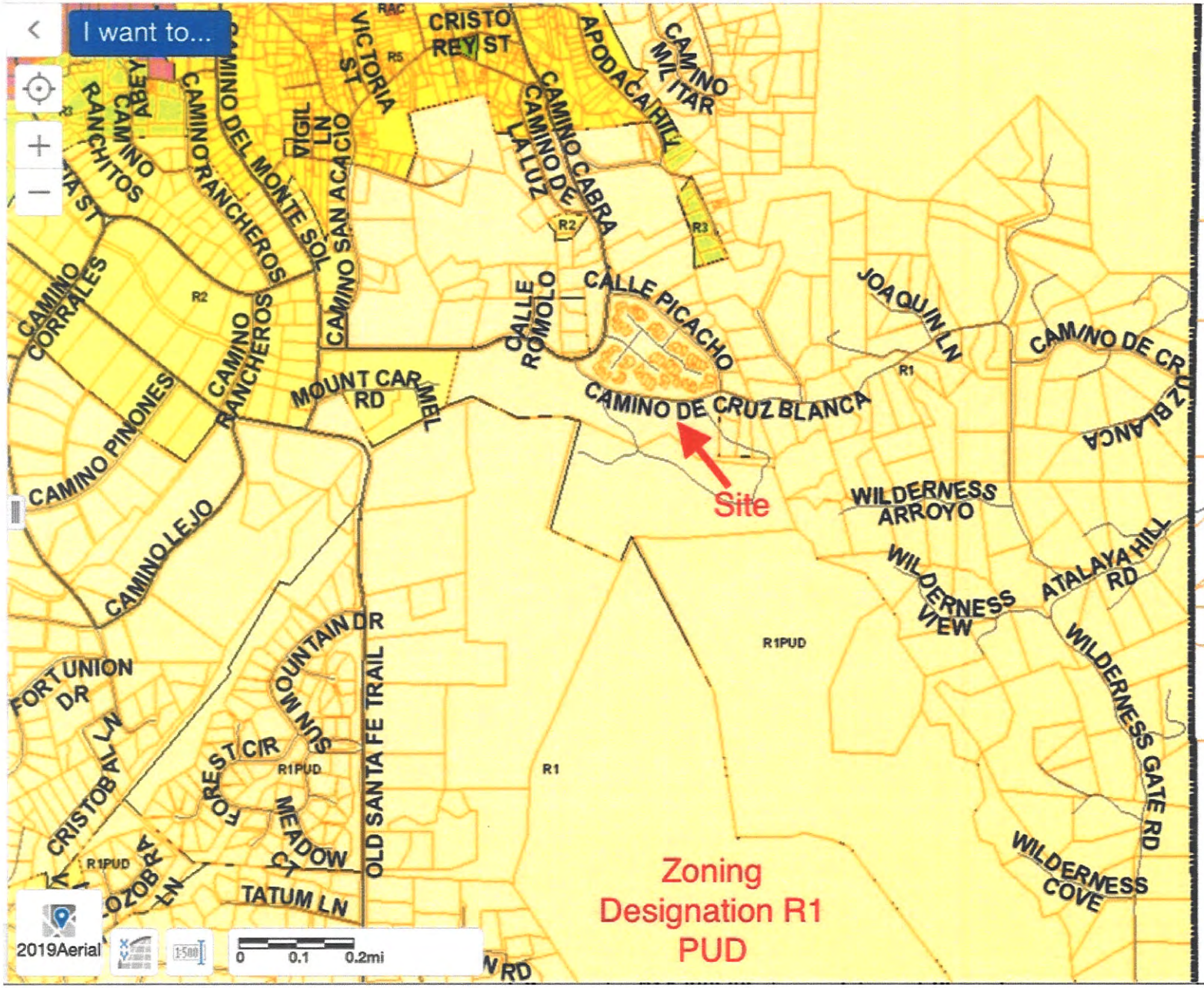
I want to...
CRISTO REY ST
VICTORIA ST
APODACA HILL
CAMINO MILITAR
CAMINO DEL MONTE SOL
CAMINO RANCHITOS
CAMINO RANCHEROS
CAMINO SAN ACACIO
CAMINO CABRA
CAMINO DE LA LUZ
CALLE ROMOLO
CALLE PICACHO
CAMINO CORRALES
CAMINO PINONES
CAMINO LEJO
MOUNT CARMEL RD
CAMINO DE CRUZ BLANCA
JOAQUIN LN
WILDERNESS ARROYO
WILDERNESS VIEW
ATALAYA HILL RD
WILDERNESS GATE RD
WILDERNESS COVE
ATALAYA HILLS TRL
FORT UNION DR
SUN MOUNTAIN DR
FOREST CIR
MEADOW CT
OLD SANTA FE TRAIL
CRISTOBAL LN
TATUM LN
R1
R1PUD
R2
R3
Site
Zoning
Designation R1
PUD
2019Aerial
0 0.1 0.2mi

"EXHIBIT G"

CELL TREES
Celebrating 20 Years in business

5401 S. CANADA PLACE
TUCSON, AZ 85706
PH: (520) 663-1330

SJC PARKING LOT

SITE #: NML00255
MONOPINE

CELL TREES, INC. Job:
20-027

LOCATION:

1160 CAMINO DE CRUZ BLANCA
SANTA FE, NM 87505
SANTA FE COUNTY

DRAWING INDEX

MP-1 TITLE SHEET
MP-2 NOTES & SPECIFICATIONS
MP-3 ELEVATION VIEWS
MP-4 DETAILS
MP-5 NOT USED
MP-6 NOT USED
MP-7 BRANCH LAYOUT

AT&T

CELL TREES

JOB #: 20-027

VECTOR ENGINEERS
1525 N. Greenfield Rd., Suite 112
Mesa, AZ 85205
(480) 640-3514
www.vectorse.com

DATE: 5/7/2020	DESIGNED: ALL	DRAFTER: ALL

REVISIONS

REV	DATE	DESCRIPTION

TITLE SHEET

SJC PARKING LOT
SITE #: NML00255
80'-0" MONOPINE
1160 CAMINO DE CRUZ BLANCA
SANTA FE, NM 87505
SANTA FE COUNTY

A1212-0449-201

MP-1 REV 0

Copyright © 2020 Vector Structural Engineering of Arizona, LLP. This drawing contains proprietary information belonging to Vector Structural Engineering of Arizona, LLP, and may be neither wholly nor partially copied or reproduced without the prior written permission of Vector Structural Engineering of Arizona, LLP.

SUMMARY OF SPECIAL INSPECTION		
NO.	DESCRIPTION OF TYPE OF INSPECTION REQ'D, LOCATION, REMARKS, ETC.	INSPECTION TYPE
1.	REQUIRED INSPECTIONS FOR SOIL/FOUNDATION:	
A.	VERIFY EXCAVATIONS ARE EXTENDED TO PROPER DEPTH AND THAT THE MATERIALS BELOW FOUNDATIONS ARE ADEQUATE TO ACHIEVE THE DESIGN BEARING CAPACITY	PERIODIC
B.	PERFORM CLASSIFICATION AND TESTING OF COMPACTED FILL MATERIALS	PERIODIC
C.	VERIFY USE OF PROPER MATERIALS, DENSITIES AND LIFT THICKNESSES DURING PLACEMENT AND COMPACTION OF COMPACTED FILL.	CONTINUOUS
D.	PRIOR TO PLACEMENT OF COMPACTED FILL, INSPECT SUBGRADE AND VERIFY THAT IT HAS BEEN PREPARED PROPERLY	PERIODIC
2.	REQUIRED INSPECTIONS FOR CAST-IN-PLACE DEEP FOUNDATION ELEMENTS	
A.	INSPECT DRILLING OPERATIONS AND MAINTAIN COMPLETE AND ACCURATE RECORDS FOR EACH ELEMENT	CONTINUOUS
B.	VERIFY PLACEMENT LOCATIONS AND PLUMBNESS, CONFIRM ELEMENT DIAMETERS, BELL DIAMETERS (IF APPLICABLE), LENGTHS, EMBEDMENT INTO BEDROCK (IF APPLICABLE) AND ADEQUATE END-BEARING STRATA CAPACITY. RECORD CONCRETE OR GROUT VOLUMES.	CONTINUOUS
3.	REQUIRED INSPECTIONS FOR CONCRETE CONSTRUCTION	
A.	INSPECT REINFORCEMENT AND VERIFY PLACEMENT	PERIODIC
B.	INSPECT ANCHORS CAST IN CONCRETE - PLUMBNESS, ORIENTATION, TOP AND BOTTOM TEMPLATES ARE INSTALLED, AND THAT THE MINIMUM EMBEDMENT SPECIFIED BY THE FOUNDATION DESIGNER IS MET.	PERIODIC
C.	VERIFY USE OF REQUIRED DESIGN MIX AND COMPLIANCE WITH ACI 318-14	PERIODIC
D.	PRIOR TO CONCRETE PLACEMENT, FABRICATE SPECIMENS FOR STRENGTH TESTS, PERFORM SLUMP AND AIR CONTENT TESTS, AND DETERMINE THE TEMPERATURE OF THE CONCRETE.	CONTINUOUS
E.	INSPECT CONCRETE PLACEMENT FOR PROPER APPLICATION TECHNIQUES.	CONTINUOUS
F.	VERIFY MAINTENANCE OF SPECIFIED CURING TEMPERATURE AND TECHNIQUES	PERIODIC
G.	INSPECT FORMWORK FOR PROPER SHAPE, LOCATION AND DIMENSIONS.	PERIODIC
4.	BOLTING:	
A.	ANCHOR BOLTS SHALL BE INSTALLED WITH A LOCKING MECHANISM AND BE TIGHTENED TO A "SNUG TIGHT" CONDITION PER AISC	PERIODIC
B.	ALL HIGH STRENGTH BOLTS, A325, SHALL BE TIGHTENED TO THE TURN OF NUT METHOD AS DEFINED BY AISC	PERIODIC
5.	FIELD WELDING:	
A.	NO FIELD WELDING SHALL BE PERMITTED EXCEPT WHERE SPECIFICALLY NOTED ON THE STRUCTURAL DRAWINGS	<= 5/16, PERIODIC > 5/16, CONTINUOUS
6.	SHOP WELDING:	
A.	ALL SHOP WELDING OF STRUCTURAL STEEL SHALL BE PERFORMED BY AN APPROVED FABRICATOR'S SHOP PER 2015 IBC SECTION 1704.2.5	PROVIDE CERTS.
B.	ALL WELDED CONNECTIONS SHALL CONFORM WITH THE LATEST EDITION OF THE AMERICAN WELDING SOCIETY (AWS) D1.1	N/A
C.	WELD ELECTRODES SHALL BE LOW HYDROGEN E70XX U.N.O.	N/A
D.	VISUAL INSPECTION OF ALL WELDS SHALL BE PERFORMED BEFORE GALVANIZING.	INSPECT AND REPORT
E.	IF A WELD IS IN QUESTION PER THE VISUAL INSPECTION THEN IT SHALL BE TESTED USING AN APPROPRIATE TEST, I.E. DIE PENETRATION, MAGNETIC PARTICLE, U.T., ETC.	INSPECT AND REPORT

SPECIAL INSPECTION:

1. SPECIAL INSPECTION SHALL BE PERFORMED ACCORDING TO 2015 IBC.
2. THE SPECIAL INSPECTOR SHALL BE APPROVED BY THE LOCAL JURISDICTION TO PERFORM THE TYPES OF INSPECTION REQUIRED.
3. ANY SUPPORT SERVICE PERFORMED BY THE ENGINEER OF RECORD DURING CONSTRUCTION SHALL BE DISTINGUISHED FROM INSPECTION SERVICES WHICH ARE FURNISHED BY OTHERS. THESE SUPPORT SERVICES PERFORMED BY THE ENGINEER OF RECORD ARE ONLY FOR THE PURPOSE OF ASSISTING IN THE QUALITY CONTROL AND IN ACHIEVING CONFORMANCE WITH THE CONTRACT DOCUMENTS. THIS SUPPORT DOES NOT GUARANTEE THE CONTRACTOR'S PERFORMANCE AND SHALL NOT BE CONSTRUED AS SUPERVISION OF CONSTRUCTION.

GENERAL DESIGN NOTES:

STRUCTURAL DESIGN IS BASED ON THE INTERNATIONAL BUILDING CODE, 2015 EDITION AND THE TIA-222-G STANDARD

DESIGN LOADS:

WIND: WIND SPEED = 115 MPH (3-SEC GUST) PER THE ASCE 7-10 STANDARD
RISK CATEGORY / STRUCTURE CLASS: II
EXPOSURE: C
TOPOGRAPHIC CATEGORY: 1
CREST HEIGHT: 0 FT

ICE: NONE PER THE TIA-222-G STANDARD

SEISMIC:
IMPORTANCE FACTOR: 1.00
RISK CATEGORY / STRUCTURE CLASS: II
MAPPED SPECTRAL RESPONSE ACCELERATIONS:
S_S = 0.445g, S_1 = 0.133g
SITE CLASS: D
SPECTRAL RESPONSE COEFFICIENTS:
S_{DS} = 0.428g, S_{D1} = 0.201g
SEISMIC DESIGN CATEGORY: D
BASIC SEISMIC-FORCE-RESISTING-SYSTEM:
TELECOMMUNICATION TOWER: STEEL POLE
SEISMIC BASE SHEAR, V: 4.0 K
SEISMIC RESPONSE COEFFICIENT, Cs: 0.110
RESPONSE MODIFICATION FACTOR, R: 1.5
ANALYSIS PROCEDURE: EQUIVALENT LATERAL FORCE

STRUCTURAL STEEL:

1. POLYGONAL MONOPOLE SHAFT STEEL SHALL CONFORM w/ ASTM A572 GR. 65, U.N.O.
2. BASEPLATE STEEL SHALL CONFORM w/ ASTM A572 GR. 50, U.N.O.
3. ALL STEEL PIPE SHALL CONFORM w/ ASTM A53 GR. B (35 KSI), U.N.O.
4. ALL STEEL RECTANGULAR TUBES (HSS) SHALL CONFORM w/ ASTM A500 GR. B (46 KSI), U.N.O.
5. REINFORCED PORT STEEL SHALL CONFORM w/ ASTM A572 GR. 65, U.N.O.
6. ALL OTHER STEEL SHAPES & PLATES SHALL CONFORM w/ ASTM A36, U.N.O.
7. ALL BOLTS FOR STEEL-TO-STEEL CONNECTIONS SHALL CONFORM w/ ASTM F3125 GR. A325, U.N.O.
8. ALL ANCHOR BOLTS SHALL CONFORM w/ ASTM A615 GR. 75, U.N.O.
9. ALL WELDING SHALL BE PERFORMED BY CERTIFIED WELDERS IN ACCORDANCE w/ THE LATEST VERSION OF THE AMERICAN WELDING SOCIETY AWS D1.1. STEEL WELDS SHALL BE BY E70XX LOW HYDROGEN ELECTRODES, U.N.O.
10. ALL STEEL SURFACES SHALL BE GALVANIZED IN ACCORDANCE w/ ASTM A123 AND ASTM F2329 STANDARDS.
11. ALL BOLTED CONNECTIONS SHALL BE TIGHTENED PER THE "TURN-OF-NUT" METHOD AS DEFINED BY AISC.

BASE DESIGN REACTIONS:

MOMENT, M = 3,720 K-FT (1.0 WIND)
SHEAR, V = 63.0 K (1.0 WIND)
AXIAL, P = 42.9 K (1.2 DEAD)

DISCLAIMERS:

1. ALL STRUCTURAL COMPONENTS TO BE CONNECTED TOGETHER SHALL BE COMPLETELY FIT UP ON THE GROUND OR OTHERWISE VERIFIED FOR COMPATIBILITY PRIOR TO LIFTING ANY COMPONENT INTO PLACE. REPAIRS REQUIRED DUE TO FIT-UP OR CONNECTION COMPATIBILITY PROBLEMS AFTER PARTIAL ERECTION ARE THE FINANCIAL RESPONSIBILITY OF THE CONTRACTOR.
2. WHERE EFFECTIVE PROJECTED AREAS (EPA) ARE USED, IT IS THE RESPONSIBILITY OF OTHERS TO VERIFY INSTALLED EQUIPMENT DOES NOT EXCEED LISTED EPA.

AT&T

CELL TREES

JOB #: 20-027

VECTOR ENGINEERS
1635 N. Greenfield Rd., Suite 112
Mesa, AZ 85205
(480) 648-3514
www.vectorsa.com

DATE: 5/7/2020	DESIGNED: ALL	DRAFTER: ALL

REVISIONS

REV	DATE	DESCRIPTION

NOTES & SPECIFICATIONS

SJC PARKING LOT
SITE #: NML00255
80'-0" MONOPINE
1160 CAMINO DE CRUZ BLANCA
SANTA FE, NM 87505
SANTA FE COUNTY

A1212-0449-201

MP-2

REV 0

Copyright © 2020 Vector Structural Engineering of Arizona, LLP. This drawing contains proprietary information belonging to Vector Structural Engineering of Arizona, LLP, and may be neither wholly nor partially copied or reproduced without the prior written permission of Vector Structural Engineering of Arizona, LLP.

DESIGN LOADING:
ANTENNA C.L. @ 80'-0" A.G.L.:
SAME AS DESIGN LOADING @ 70'-0" A.G.L
ANTENNA C.L. @ 70'-0" A.G.L.:
(12) 96"x20"x9", 115 lb PANEL ANTENNAS
(15) 28"x19"x11", 75 lb RRUs
(3) 29"x16"x11", 40 lb SURGE/RAYCAP/J-BOX
(3) 9'-6" T-ARM MOUNTS BY OTHERS
ANTENNA C.L. @ 60'-0" A.G.L.:
SAME AS DESIGN LOADING @ 70'-0" A.G.L
ANTENNA C.L. @ 50'-0" A.G.L.:
SAME AS DESIGN LOADING @ 70'-0" A.G.L

APPURTENANCES (2)
N.T.S.

MONOPOLE SECTION CHART[2]					
SECTION	LENGTH	øTOP[4]	øBOTTOM[4]	THICKNESS	WEIGHT[1,3]
1	40'-0"	25.60"	38.00"	1/4"	3.7 K
2	39'-3"	35.87"	48.04"	3/8"	8.5 K

NOTES:
1. SECTION WEIGHT INCLUDES PORTS. LOWEST SECTION WEIGHT INCLUDES BASEPLATE WEIGHT.
2. DESIGN TAPER = 0.31 in/ft.
3. WEIGHTS LISTED IN THIS CHART ARE RAW STEEL WEIGHTS. FINAL WEIGHTS MAY BE UP TO 22% GREATER DUE TO GALVANIZING AND OTHER MISCELLANEOUS ITEMS.
4. DIAMETER OF POLE SECTIONS AT LAP SPLICES MAY BE ADJUSTED BY UP TO 0.06" TO ACCOUNT FOR THE THICKNESS OF COATINGS.

POLE SECTIONS (3)
N.T.S.

NOTE: BRANCHES ARE SHOWN FOR ILLUSTRATIVE PURPOSES ONLY AND ARE NOT NECESSARILY SHOWN TO SCALE.

NOTE: MONOPOLE DESIGNED FOR 10'-0" FUTURE EXTENSION

NOTE: ANTENNAS & PORTS ARE SHOWN FOR ILLUSTRATIVE PURPOSES & ARE NOT NECESSARILY SHOWN TO SCALE

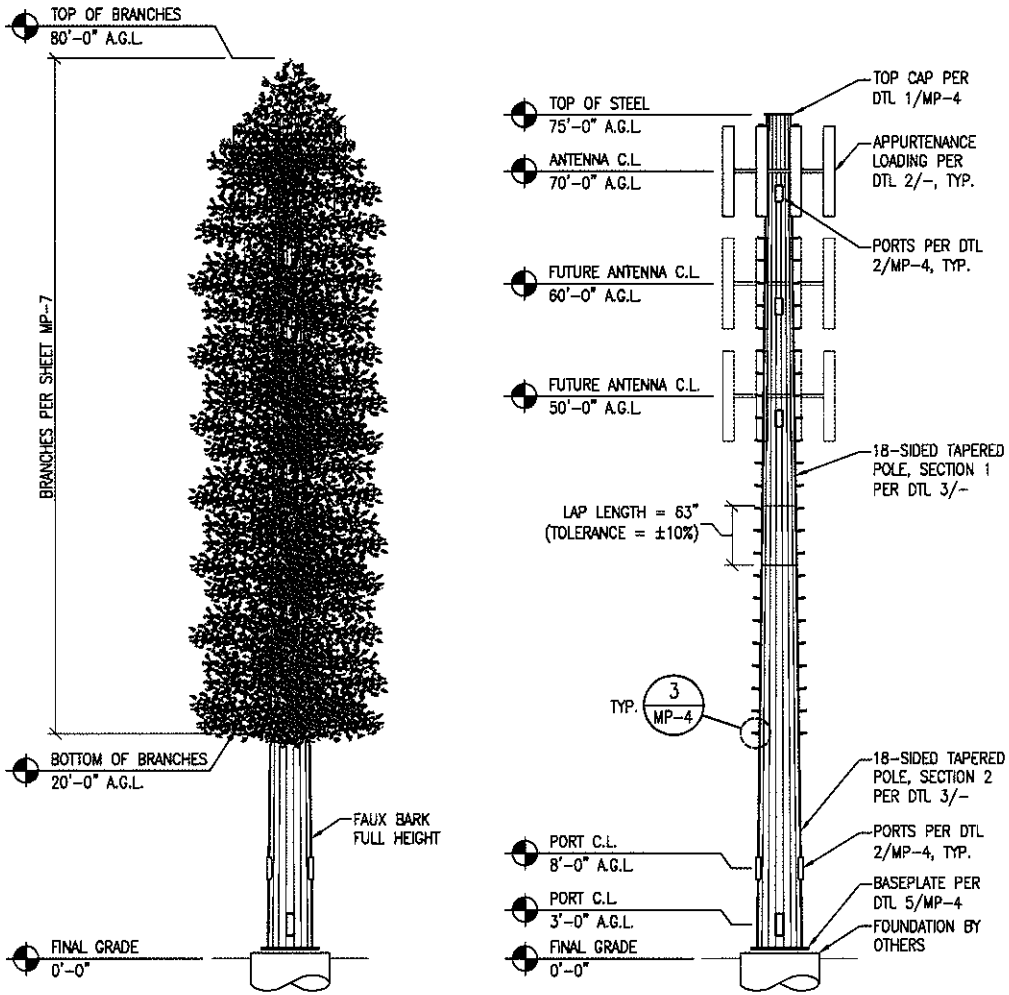

ELEVATIONS (1)
N.T.S.

AT&T

CELL TREES

JOB #: 20-027

VECTOR ENGINEERS
1635 N. Greenfield Rd., Suite 112
Mesa, AZ 85205
(480) 646-3514
www.vectorse.com

DATE: 5/7/2020	DESIGNED: ALL	DRAFTER: ALL

REVISIONS

REV	DATE	DESCRIPTION

ELEVATION VIEWS

SJC PARKING LOT
SITE #: NML00255
80'-0" MONOPINE
1180 CAMINO DE CRUZ BLANCA
SANTA FE, NM 87506
SANTA FE COUNTY

A1212-0449-201

MP-3 REV 0

Copyright © 2020 Vector Structural Engineering of Arizona, LLP. This drawing contains proprietary information belonging to Vector Structural Engineering of Arizona, LLP, and may be neither wholly nor partially copied or reproduced without the prior written permission of Vector Structural Engineering of Arizona, LLP.

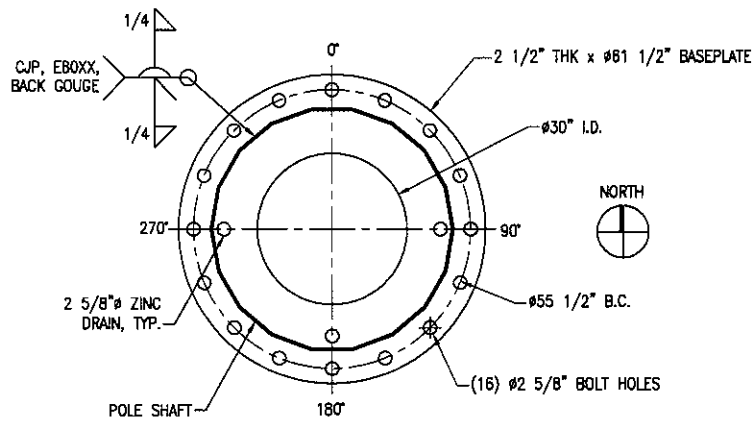

BASEPLATE N.T.S. (5)

A WEEP HOLE OR OTHER MEANS OF PREVENTING WATER BUILD UP SHALL BE PROVIDED FOR BRANCH RECEIVERS

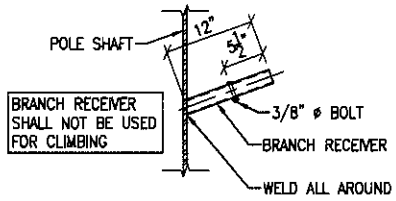

BRANCH RECEIVER SHALL NOT BE USED FOR CLIMBING

BRANCH RECEIVERS ARE BY CELL TREES AND SHOWN FOR REFERENCE ONLY. COMPONENTS ARE NOT REVIEWED BY VECTOR.

BRANCH RECEIVER N.T.S. (3)

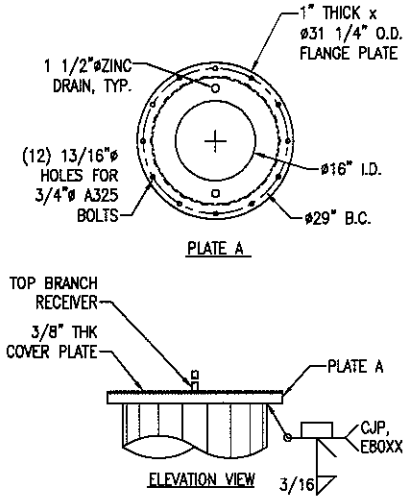

TOP CAP N.T.S. (1)

PORT SCHEDULE					
C.L. ELEV.	PORT SIZE (B x H)	D	T	QTY	AZIMUTH(S)
68'-0"	6"x18"	2"	1/2"	3	0°/120°/240°
58'-0"	6"x18"	2"	1/2"	3	0°/120°/240°
48'-0"	6"x18"	2"	1/2"	3	0°/120°/240°
8'-0"	9"x24"	6"	3/4"	2	90°/270°
3'-0"	9"x24"	6"	3/4"	2	0°/180°

PORT SCHEDULE N.T.S. (4)

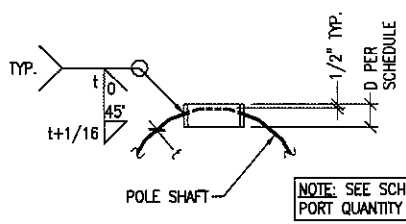

NOTE: SEE SCHEDULE FOR PORT QUANTITY & AZIMUTHS

SECTION VIEW

NOTE: SEE DTL 3/MP-3 FOR POLE SHAFT THICKNESS, t

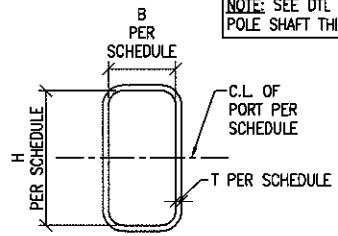

ELEVATION VIEW

PORTS N.T.S. (2)

AT&T

CELL TREES

JOB #: 20-027

VECTOR ENGINEERS

1525 N. Greenfield Rd., Suite 112 Mesa, AZ 85205 (480) 649-3514 www.vectorse.com

DATE: 5/7/2020	DESIGNED: ALL	DRAFTER: ALL

REVISIONS

REV	DATE	DESCRIPTION

DETAILS

SJC PARKING LOT
SITE #: NML00255
80'-0" MONOPINE
1160 CAMINO DE CRUZ BLANCA
SANTA FE, NM 87505
SANTA FE COUNTY

A1212-0449-201

MP-4 REV 0

Copyright © 2020 Vector Structural Engineering of Arizona, LLP. This drawing contains proprietary information belonging to Vector Structural Engineering of Arizona, LLP, and may be neither wholly nor partially copied or reproduced without the prior written permission of Vector Structural Engineering of Arizona, LLP.

NORTH

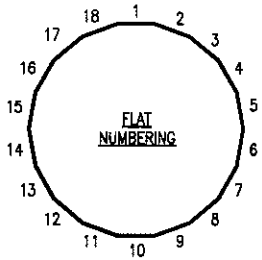

T = BRANCH TIPS
BB = BOOM BRANCH
X = VACANT RECEIVER
2 = 2'-0" BRANCH
3 = 3'-0" BRANCH
4 = 4'-0" BRANCH
5 = 5'-0" BRANCH
6 = 6'-0" BRANCH
7 = 7'-0" BRANCH
8 = 8'-0" BRANCH
9 = 9'-0" BRANCH
10 = 10'-0" BRANCH
TOTAL BRANCH COUNT = 199
AVERAGE = 3.06 BRANCHES PER FOOT

BRANCH LAYOUT

Elev	Deg	1	2	3	4	5	6	7	8	9	10	11	12	13	14	15	16	17	18
75.00	90									5									
75.00	30		3						3						3				
74.25	30			X	6					X	6					X	6		
73.50	15						6						6						6
72.50	15		8						8						8				
71.50	15					8						8						8	
70.50	15			6						6						6			
70.00			BB		BB				BB		BB				BB		BB		
69.00	0	6						6						6					
68.00	0				8						8						8		
67.00	15						6						6						6
66.00	15		6						6						6				
65.00	15					8						8						8	
64.00	15			6						6						6			
63.00	15	6						6						6					
62.00	15				8						8						8		
60.75	15						6						6						6
60.00																			
59.25	15		6						6						6				
58.00	15					8						8						8	
57.00	15			6						6						6			
56.00	15	6						6						6					
55.00	15				8						8						8		
54.00	15						6						6						6
53.00	15		6						6						6				
52.00	15					8						8						8	
50.75	15			6						6						6			
50.00																			
49.25	15	8						8						8					
48.25	15				8						8						8		
47.00	15						6						6						6
46.00	15		8						8						8				
45.00	15					8						8						8	
44.00	15			6						6						6			
43.00	15						6						6						6
42.00	15	8						8						8					
41.00	15				8						8						8		
40.00	15						6						6						6
39.00	15		8						8						8				
38.00	15				6						6						6		
37.00	15					8						8						8	
36.00	15			6						6						6			
35.00	15	8						8						8					
34.00	15				8						8						8		
33.00	15					6						6						6	
32.00	15						8						8						8
31.00	15		8						8						8				
30.00	15					8						8						8	
29.00	15			10						10						10			
28.00	15		6						6						6				
27.00	15	8						8						8					
25.75	15				10						10						10		
24.50	15						10						10						10
23.25	15		10						10						10				
22.00	15					10						10						10	
21.00	15			10						10						10			
20.00	15	10						10						10					

AT&T

CELL TREES

JOB #: 20-027

VECTOR ENGINEERS
1635 N. Greenfield Rd., Suite 112
Mesa, AZ 85205
(480) 846-3614
www.vectorse.com

DATE: 5/7/2020 | DESIGNED: ALL | DRAFTER: ALL

REVISIONS

REV	DATE	DESCRIPTION

BRANCH LAYOUT

SJC PARKING LOT
SITE #: NML00255
80'-0" MONOPINE
1160 CAMINO DE CRUZ BLANCA
SANTA FE, NM 87506
SANTA FE COUNTY

A1212-0449-201

MP-7 REV 0

Copyright © 2020 Vector Structural Engineering of Arizona, LLP. This drawing contains proprietary information belonging to Vector Structural Engineering of Arizona, LLP, and may be neither wholly nor partially copied or reproduced without the prior written permission of Vector Structural Engineering of Arizona, LLP.

CELL TREES
Celebrating 20 Years in Business

5401 S. CANADA PLACE
TUCSON, AZ 85706
PH: (520) 663-1330

SJC PARKING LOT

SITE #: NML00255
MONOPINE

CELL TREES, INC. Job:
20-027

LOCATION:

1160 CAMINO DE CRUZ BLANCA
SANTA FE, NM 87505
SANTA FE COUNTY

DRAWING INDEX

MP-1 TITLE SHEET
MP-2 NOTES & SPECIFICATIONS
MP-3 ELEVATION VIEWS
MP-4 DETAILS
MP-5 NOT USED
MP-6 NOT USED
MP-7 BRANCH LAYOUT

AT&T

CELL TREES

JOB #: 20-027

VECTOR ENGINEERS
1635 N. Greenfield Rd., Suite 112
Mesa, AZ 85205
(480) 649-3514
www.vectorsa.com

DATE: 5/7/2020	DESIGNED: ALL	DRAFTER: ALL

REVISIONS

REV	DATE	DESCRIPTION

TITLE SHEET

SJC PARKING LOT
SITE #: NML00255
80'-0" MONOPINE
1160 CAMINO DE CRUZ BLANCA
SANTA FE, NM 87505
SANTA FE COUNTY

A1212-0449-201

MP-1 REV 0

Copyright © 2020 Vector Structural Engineering of Arizona, LLP. This drawing contains proprietary information belonging to Vector Structural Engineering of Arizona, LLP, and may be neither wholly nor partially copied or reproduced without the prior written permission of Vector Structural Engineering of Arizona, LLP.

SUMMARY OF SPECIAL INSPECTION		
NO.	DESCRIPTION OF TYPE OF INSPECTION REQ'D, LOCATION, REMARKS, ETC.	INSPECTION TYPE
1.	REQUIRED INSPECTIONS FOR SOIL/FOUNDATION:	
A.	VERIFY EXCAVATIONS ARE EXTENDED TO PROPER DEPTH AND THAT THE MATERIALS BELOW FOUNDATIONS ARE ADEQUATE TO ACHIEVE THE DESIGN BEARING CAPACITY	PERIODIC
B.	PERFORM CLASSIFICATION AND TESTING OF COMPACTED FILL MATERIALS	PERIODIC
C.	VERIFY USE OF PROPER MATERIALS, DENSITIES AND LIFT THICKNESSES DURING PLACEMENT AND COMPACTION OF COMPACTED FILL.	CONTINUOUS
D.	PRIOR TO PLACEMENT OF COMPACTED FILL, INSPECT SUBGRADE AND VERIFY THAT IT HAS BEEN PREPARED PROPERLY	PERIODIC
2.	REQUIRED INSPECTIONS FOR CAST-IN-PLACE DEEP FOUNDATION ELEMENTS	
A.	INSPECT DRILLING OPERATIONS AND MAINTAIN COMPLETE AND ACCURATE RECORDS FOR EACH ELEMENT	CONTINUOUS
B.	VERIFY PLACEMENT LOCATIONS AND PLUMBNESS, CONFIRM ELEMENT DIAMETERS, BELL DIAMETERS (IF APPLICABLE), LENGTHS, EMBEDMENT INTO BEDROCK (IF APPLICABLE) AND ADEQUATE END-BEARING STRATA CAPACITY. RECORD CONCRETE OR GROUT VOLUMES.	CONTINUOUS
3.	REQUIRED INSPECTIONS FOR CONCRETE CONSTRUCTION	
A.	INSPECT REINFORCEMENT AND VERIFY PLACEMENT	PERIODIC
B.	INSPECT ANCHORS CAST IN CONCRETE - PLUMBNESS, ORIENTATION, TOP AND BOTTOM TEMPLATES ARE INSTALLED, AND THAT THE MINIMUM EMBEDMENT SPECIFIED BY THE FOUNDATION DESIGNER IS MET.	PERIODIC
C.	VERIFY USE OF REQUIRED DESIGN MIX AND COMPLIANCE WITH ACI 318-14	PERIODIC
D.	PRIOR TO CONCRETE PLACEMENT, FABRICATE SPECIMENS FOR STRENGTH TESTS, PERFORM SLUMP AND AIR CONTENT TESTS, AND DETERMINE THE TEMPERATURE OF THE CONCRETE.	CONTINUOUS
E.	INSPECT CONCRETE PLACEMENT FOR PROPER APPLICATION TECHNIQUES.	CONTINUOUS
F.	VERIFY MAINTENANCE OF SPECIFIED CURING TEMPERATURE AND TECHNIQUES	PERIODIC
G.	INSPECT FORMWORK FOR PROPER SHAPE, LOCATION AND DIMENSIONS.	PERIODIC
4.	BOLTING:	
A.	ANCHOR BOLTS SHALL BE INSTALLED WITH A LOCKING MECHANISM AND BE TIGHTENED TO A "SNUG TIGHT" CONDITION PER AISC	PERIODIC
B.	ALL HIGH STRENGTH BOLTS, A325, SHALL BE TIGHTENED TO THE TURN OF NUT METHOD AS DEFINED BY AISC	PERIODIC
5.	FIELD WELDING:	
A.	NO FIELD WELDING SHALL BE PERMITTED EXCEPT WHERE SPECIFICALLY NOTED ON THE STRUCTURAL DRAWINGS	<= 5/16, PERIODIC > 5/16, CONTINUOUS
6.	SHOP WELDING:	
A.	ALL SHOP WELDING OF STRUCTURAL STEEL SHALL BE PERFORMED BY AN APPROVED FABRICATOR'S SHOP PER 2015 IBC SECTION 1704.2.5	PROVIDE CERTS.
B.	ALL WELDED CONNECTIONS SHALL CONFORM WITH THE LATEST EDITION OF THE AMERICAN WELDING SOCIETY (AWS) D1.1	N/A
C.	WELD ELECTRODES SHALL BE LOW HYDROGEN E70XX U.N.O.	N/A
D.	VISUAL INSPECTION OF ALL WELDS SHALL BE PERFORMED BEFORE GALVANIZING.	INSPECT AND REPORT
E.	IF A WELD IS IN QUESTION PER THE VISUAL INSPECTION THEN IT SHALL BE TESTED USING AN APPROPRIATE TEST, I.E. DIE PENETRATION, MAGNETIC PARTICLE, U.T., ETC.	INSPECT AND REPORT

SPECIAL INSPECTION:

1. SPECIAL INSPECTION SHALL BE PERFORMED ACCORDING TO 2015 IBC.
2. THE SPECIAL INSPECTOR SHALL BE APPROVED BY THE LOCAL JURISDICTION TO PERFORM THE TYPES OF INSPECTION REQUIRED.
3. ANY SUPPORT SERVICE PERFORMED BY THE ENGINEER OF RECORD DURING CONSTRUCTION SHALL BE DISTINGUISHED FROM INSPECTION SERVICES WHICH ARE FURNISHED BY OTHERS. THESE SUPPORT SERVICES PERFORMED BY THE ENGINEER OF RECORD ARE ONLY FOR THE PURPOSE OF ASSISTING IN THE QUALITY CONTROL AND IN ACHIEVING CONFORMANCE WITH THE CONTRACT DOCUMENTS. THIS SUPPORT DOES NOT GUARANTEE THE CONTRACTOR'S PERFORMANCE AND SHALL NOT BE CONSTRUED AS SUPERVISION OF CONSTRUCTION.

GENERAL DESIGN NOTES:

STRUCTURAL DESIGN IS BASED ON THE INTERNATIONAL BUILDING CODE, 2015 EDITION AND THE TIA-222-G STANDARD

DESIGN LOADS:

WIND: WIND SPEED = 115 MPH (3-SEC GUST) PER THE ASCE 7-10 STANDARD
RISK CATEGORY / STRUCTURE CLASS: II
EXPOSURE: C
TOPOGRAPHIC CATEGORY: 1
CREST HEIGHT: 0 FT

ICE: NONE PER THE TIA-222-G STANDARD

SEISMIC:
IMPORTANCE FACTOR: 1.00
RISK CATEGORY / STRUCTURE CLASS: II
MAPPED SPECTRAL RESPONSE ACCELERATIONS:
S_S = 0.445g, S_1 = 0.133g
SITE CLASS: D
SPECTRAL RESPONSE COEFFICIENTS:
S_{DS} = 0.428g, S_{D1} = 0.201g
SEISMIC DESIGN CATEGORY: D
BASIC SEISMIC-FORCE-RESISTING-SYSTEM:
TELECOMMUNICATION TOWER: STEEL POLE
SEISMIC BASE SHEAR, V: 4.0 K
SEISMIC RESPONSE COEFFICIENT, Cs: 0.110
RESPONSE MODIFICATION FACTOR, R: 1.5
ANALYSIS PROCEDURE: EQUIVALENT LATERAL FORCE

STRUCTURAL STEEL:

1. POLYGONAL MONOPOLE SHAFT STEEL SHALL CONFORM w/ ASTM A572 GR. 65, U.N.O.
2. BASEPLATE STEEL SHALL CONFORM w/ ASTM A572 GR. 50, U.N.O.
3. ALL STEEL PIPE SHALL CONFORM w/ ASTM A53 GR. B (35 KSI), U.N.O.
4. ALL STEEL RECTANGULAR TUBES (HSS) SHALL CONFORM w/ ASTM A500 GR. B (46 KSI), U.N.O.
5. REINFORCED PORT STEEL SHALL CONFORM w/ ASTM A572 GR. 65, U.N.O.
6. ALL OTHER STEEL SHAPES & PLATES SHALL CONFORM w/ ASTM A36, U.N.O.
7. ALL BOLTS FOR STEEL-TO-STEEL CONNECTIONS SHALL CONFORM w/ ASTM F3125 GR. A325, U.N.O.
8. ALL ANCHOR BOLTS SHALL CONFORM w/ ASTM A615 GR. 75, U.N.O.
9. ALL WELDING SHALL BE PERFORMED BY CERTIFIED WELDERS IN ACCORDANCE w/ THE LATEST VERSION OF THE AMERICAN WELDING SOCIETY AWS D1.1. STEEL WELDS SHALL BE BY E70XX LOW HYDROGEN ELECTRODES, U.N.O.
10. ALL STEEL SURFACES SHALL BE GALVANIZED IN ACCORDANCE w/ ASTM A123 AND ASTM F2329 STANDARDS.
11. ALL BOLTED CONNECTIONS SHALL BE TIGHTENED PER THE "TURN-OF-NUT" METHOD AS DEFINED BY AISC.

BASE DESIGN REACTIONS:

MOMENT, M = 3,720 K-FT (1.0 WIND)
SHEAR, V = 63.0 K (1.0 WIND)
AXIAL, P = 42.9 K (1.2 DEAD)

DISCLAIMERS:

1. ALL STRUCTURAL COMPONENTS TO BE CONNECTED TOGETHER SHALL BE COMPLETELY FIT UP ON THE GROUND OR OTHERWISE VERIFIED FOR COMPATIBILITY PRIOR TO LIFTING ANY COMPONENT INTO PLACE. REPAIRS REQUIRED DUE TO FIT-UP OR CONNECTION COMPATIBILITY PROBLEMS AFTER PARTIAL ERECTION ARE THE FINANCIAL RESPONSIBILITY OF THE CONTRACTOR.
2. WHERE EFFECTIVE PROJECTED AREAS (EPA) ARE USED, IT IS THE RESPONSIBILITY OF OTHERS TO VERIFY INSTALLED EQUIPMENT DOES NOT EXCEED LISTED EPA.

AT&T

CELL TREES

JOB #: 20-027

VECTOR ENGINEERS
1635 N. Greenfield Rd., Suite 112
Mesa, AZ 85205
(480) 646-3514
www.vectorse.com

DATE: 5/7/2020 | DESIGNED: ALL | DRAFTER: ALL

REVISIONS

REV	DATE	DESCRIPTION

NOTES & SPECIFICATIONS

SJC PARKING LOT
SITE #: NML00255
80'-0" MONOPINE
1160 CAMINO DE CRUZ BLANCA
SANTA FE, NM 87506
SANTA FE COUNTY

A1212-0449-201

MP-2 REV 0

Copyright © 2020 Vector Structural Engineering of Arizona, LLP. This drawing contains proprietary information belonging to Vector Structural Engineering of Arizona, LLP, and may be neither wholly nor partially copied or reproduced without the prior written permission of Vector Structural Engineering of Arizona, LLP.

VECTOR ENGINEERS

STRUCTURAL CALCULATIONS
for
SJC PARKING LOT (SITE # NML00255)
MONOPINE
at
1160 CAMINO DE CRUZ BLANCA
SANTA FE, NM 87505
for
AT&T
&
CELL TREES, INC. (20-027)

BY: MICHAEL E. GIBBONS
PROJECT ENGINEER

PROJECT #: A1212-0449-201

DATE: May 6, 2020
REVISED: June 30, 2020

DESIGNED BY ALL; CHECKED BY MEG

NOTE:
The calculations presented in this package are intended for a single use at the location indicated above, for the client listed above. These calculations shall not be reproduced, reused, "card filed", sold to a third party, or altered in any way without the written authorization of Vector Structural Engineering of Arizona, LLP and Cell Trees, Inc.

Copyright © 2020 Vector Structural Engineering of Arizona,
This Excel workbook contains proprietary information belonging to Vector Structural Engineering of Arizona, LLP, and may be neither wholly nor partially copied or reproduced without the prior written permission of Vector Structural Engineering of Arizona, LLP.

1635 N. Greenfield Rd., STE 112 / Mesa, AZ 85205 / T (480) 648-3514 / www.vectorse.com

JOB NO.: A1212-0449-201

Copyright © 2020 Vector Structural Engineering of Arizona, LLP
This Excel workbook contains proprietary information belonging to Vector Structural Engineering of Arizona, LLP, and may be neither wholly nor partially copied or reproduced without the prior written permission of Vector Structural Engineering of Arizona, LLP.

PROJECT: SJC PARKING LOT

Design Criteria:

Code: Structural design is based on the International Building Code, 2015 Edition and the TIA-222-G standard.

Wind: Basic wind speed = 115 mph (3-second gust) per the ASCE 7-10 standard
Risk Category / Structure Class: II
Wind exposure: C
Topographic category: 1
Crest height: 0 ft

Ice: None per the TIA-222-G standard

Seismic: Seismic importance factor, I = 1
Risk Category / Structure Class: II
Mapped spectral response accelerations: S_S = 0.445g S_1 = 0.133g
Site class: D
Spectral response coefficients: S_{DS} = 0.428g S_{D1} = 0.201g
Seismic design category: D
Basic seismic-force-resisting-system: Telecommunication Tower: Steel Pole
Seismic base shear, V = 4.3 k
Seismic response coefficient, Cs = 0.146
Response modification factor, R = 1.5
Analysis procedure: Equivalent Lateral Force

General Notes:

1. The contractor shall verify dimensions, conditions and elevations before starting work. The engineer shall be notified immediately if any discrepancies are found.
2. The typical notes and details shall apply in all cases unless specifically detailed elsewhere. Where no detail is shown, the construction shall be as shown for other similar work and as required by the building code.
3. These calculations are limited to the structural members shown in these calculations only. The connection of the members shown in these calculations to the existing structure shall be by others, with the exception of those explicitly shown on the drawings.
4. The contractor shall be responsible for compliance with local construction safety orders. Approval of shop drawings by the architect or structural engineer shall not be construed as accepting this responsibility.
5. All structural framing members shall be adequately shored and braced during erection and until full lateral and vertical support is provided by adjoining members.

JOB NO.: A1212-0449-201

Copyright © 2020 Vector Structural Engineering of Arizona, LLP
This Excel workbook contains proprietary information belonging to Vector Structural Engineering of Arizona, LLP, and may be neither wholly nor partially copied or reproduced without the prior written permission of Vector Structural Engineering of Arizona, LLP.

PROJECT: SJC PARKING LOT

Structural Steel:

1 All structural steel code checks based on the AISC-LRFD, 3rd Edition per the TIA-222-G standard
2 All 18-sided, tapered shaft steel to be per ASTM A572 GR. 65, U.N.O.
3 The design length of slip splices is equal to 1.67 times the inside width of the base of the upper section. Slip splice length tolerance is equal to ± 10% of the design slip splice length.
4 All steel pipe to be per ASTM A53 GR. B (35 KSI), U.N.O.
5 All steel round tubes (HSS) to be per ASTM A500 GR. B (42 KSI), U.N.O.
6 All steel rectangular tubes (HSS) to be per ASTM A500 GR. B (46 KSI), U.N.O.
7 All other structural steel shapes & plates shall be per ASTM A36, U.N.O.
8 All anchor bolts shall be per ASTM A615 GR. 75, U.N.O.
9 All bolts for steel-to-steel connections shall be per ASTM F3125 GR. A325 U.N.O.
10 All bolted connections shall be tightened per the "turn-of-nut" method as defined by AISC.
11 All welding shall be performed by certified welders in accordance with the latest edition of the American Welding Society (AWS) D1.1
12 All steel surfaces shall be galvanized in accordance with ASTM A123 and ASTM F2329 standards, thoroughly coated with a zinc-rich primer, or otherwise protected as noted on the structural drawings.

JOB NO.: A1212-0449-201

Copyright © 2020 Vector Structural Engineering of Arizona, LLP
This Excel workbook contains proprietary information belonging to Vector Structural Engineering of Arizona, LLP, and may be neither wholly nor partially copied or reproduced without the prior written permission of Vector Structural Engineering of Arizona, LLP.

PROJECT: SJC Parking Lot

Monopine Branch Layout

Eff. Area Factor:	0.86	
Top Crown Radius:	5	ft
C_A Factor:	0.6	
Bott. Branch Elev. (ft):	20	ft
Top of Steel Elev. (ft):	75	ft

Branch Layout Along Pole:

Branch Length (ft)	Qty	Elevation Start (ft)	Elevation Stop (ft)	Branch Wt. (lbs)	Total Wt. (lbs)	Wind Area Gross (ft^2)	Wind Area Eff. (ft^2)	Wind Area C_AA_E (ft^2)
8	22	67.2	75.0	34.0	748	141.4	122.3	73.4
6	34	55.3	67.2	25.0	850	172.5	149.2	89.5
8	22	47.5	55.3	34.0	748	143.4	124.0	74.4
6	35	35.2	47.5	25.0	875	180.8	156.3	93.8
8	22	27.4	35.2	34.0	748	145.4	125.8	75.5
10	21	20.0	27.4	42.0	882	169.1	146.3	87.8
				Total (lbs):	4851			

Antenna Branches:

Branch Length (ft)	Qty	Elev. (ft)	Weight
4	6	70	138
2	24	70	240

Top Crown:

Branch Length (ft)	Qty	Weight	Total Wt.
5	1	24	
3	3	51	75
Gross Area (ft2):	39.3		
Eff. Area (ft2):	34.0		
C_AA_E (ft^2):	20.4		

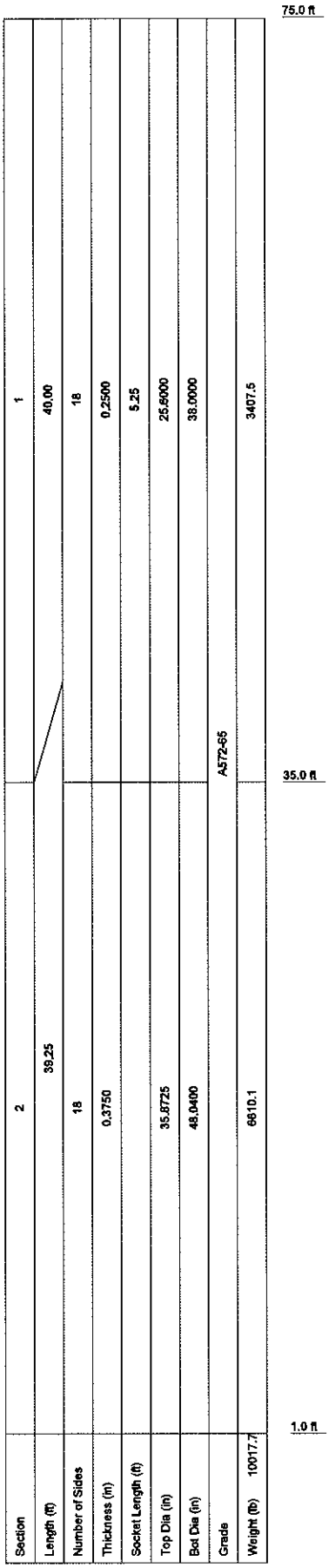

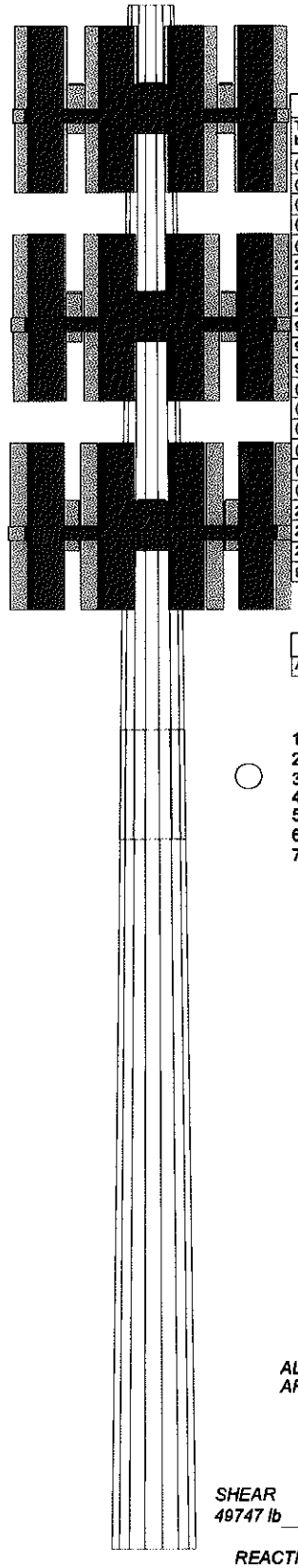

DESIGNED APPURTENANCE LOADING

TYPE	ELEVATION	TYPE	ELEVATION
Top crown with (1) 5 ft and (3) 3 ft branches	77.5	9'-6" T-Arm	60
		9'-6" T-Arm	60
(22) 8 ft branches	71.1	(5) 28x19x11 RRU/H	60
(4) 96x20x9 + MP	70	(4) 96x20x9 + MP	60
(5) 28x19x11 RRU/H	70	(4) 96x20x9 + MP	60
(5) 28x19x11 RRU/H	70	(4) 96x20x9 + MP	60
(5) 28x19x11 RRU/H	70	(5) 28x19x11 RRU/H	60
29x16x11 Surge/Raycap/J-Box + MP	70	(22) 8 ft branches	51.4
29x16x11 Surge/Raycap/J-Box + MP	70	29x16x11 Surge/Raycap/J-Box + MP	50
29x16x11 Surge/Raycap/J-Box + MP	70	29x16x11 Surge/Raycap/J-Box + MP	50
9'-6" T-Arm	70	29x16x11 Surge/Raycap/J-Box + MP	50
9'-6" T-Arm	70	9'-6" T-Arm	50
9'-6" T-Arm	70	9'-6" T-Arm	50
(4) 96x20x9 + MP	70	9'-6" T-Arm	50
(4) 96x20x9 + MP	70	(5) 28x19x11 RRU/H	50
(6) 4 ft antenna branches	70	(4) 96x20x9 + MP	50
(24) 2 ft tip branches	70	(4) 96x20x9 + MP	50
(34) 6 ft branches	61.3	(4) 96x20x9 + MP	50
(5) 28x19x11 RRU/H	60	(5) 28x19x11 RRU/H	50
29x16x11 Surge/Raycap/J-Box + MP	60	(5) 28x19x11 RRU/H	50
29x16x11 Surge/Raycap/J-Box + MP	60	(35) 6 ft branches	41.3
29x16x11 Surge/Raycap/J-Box + MP	60	(22) 8 ft branches	31.3
9'-6" T-Arm	60	(21) 10 ft branches	23.7

MATERIAL STRENGTH

GRADE	Fy	Fu	GRADE	Fy	Fu
A572-65	65 ksi	80 ksi			

TOWER DESIGN NOTES

1. Tower is located in Santa Fe County, New Mexico.
2. Tower designed for Exposure C to the TIA-222-G Standard.
3. Tower designed for a 115 mph basic wind in accordance with the TIA-222-G Standard.
4. Deflections are based upon a 60 mph wind.
5. Tower Risk Category II.
6. Topographic Category 1 with Crest Height of 0.00 ft
7. TOWER RATING: 69.3%

ALL REACTIONS ARE FACTORED

AXIAL 35201 lb

SHEAR 49747 lb

MOMENT 2631190 lb-ft

REACTIONS - 115 mph WIND

Vector Structural Engineers
1635 N. Greenfield Rd., Suite 112
Mesa, AZ 85205
Phone: (480) 648-3514
FAX: (801) 990-1776

Job: *SJC Parking Lot*			
Project: *A1212-0449-201*			
Client: Cell Trees, Inc.	Drawn by: ALL	App'd:	
Code: TIA-222-G	Date: 06/30/20	Scale: NTS	
Path:		Dwg No. E-1	

Tower Input Data

The tower is a monopole.
This tower is designed using the TIA-222-G standard.
The following design criteria apply:

Tower is located in Santa Fe County, New Mexico.
ASCE 7-10 Wind Data is used.
Basic wind speed of 115 mph.
Risk Category II.
Exposure Category C.
Topographic Category 1.
Crest Height 0.00 ft.
Deflections calculated using a wind speed of 60 mph.
A non-linear (P-delta) analysis was used.
Pressures are calculated at each section.
Stress ratio used in pole design is 1.
Local bending stresses due to climbing loads, feed line supports, and appurtenance mounts are not considered.

Options

Consider Moments - Legs
Consider Moments - Horizontals
Consider Moments - Diagonals
Use Moment Magnification
√ Use Code Stress Ratios
√ Use Code Safety Factors - Guys
Escalate Ice
Always Use Max Kz
Use Special Wind Profile
√ Include Bolts In Member Capacity
√ Leg Bolts Are At Top Of Section
√ Secondary Horizontal Braces Leg
Use Diamond Inner Bracing (4 Sided)
SR Members Have Cut Ends
SR Members Are Concentric

Distribute Leg Loads As Uniform
Assume Legs Pinned
√ Assume Rigid Index Plate
√ Use Clear Spans For Wind Area
√ Use Clear Spans For KL/r
√ Retension Guys To Initial Tension
√ Bypass Mast Stability Checks
√ Use Azimuth Dish Coefficients
√ Project Wind Area of Appurt.
√ Autocalc Torque Arm Areas
Add IBC .6D+W Combination
Sort Capacity Reports By Component
√ Triangulate Diamond Inner Bracing
Treat Feed Line Bundles As Cylinder
Ignore KL/ry For 60 Deg. Angle Legs

Use ASCE 10 X-Brace Ly Rules
√ Calculate Redundant Bracing Forces
Ignore Redundant Members in FEA
SR Leg Bolts Resist Compression
√ All Leg Panels Have Same Allowable
Offset Girt At Foundation
Consider Feed Line Torque
Include Angle Block Shear Check
Use TIA-222-G Bracing Resist. Exemption
Use TIA-222-G Tension Splice Exemption
Poles
Include Shear-Torsion Interaction
Always Use Sub-Critical Flow
Use Top Mounted Sockets
Pole Without Linear Attachments
Pole With Shroud Or No Appurtenances
Outside and Inside Corner Radii Are Known

Tapered Pole Section Geometry

Section	Elevation ft	Section Length ft	Splice Length ft	Number of Sides	Top Diameter in	Bottom Diameter in	Wall Thickness in	Bend Radius in	Pole Grade
L1	75.00-35.00	40.00	5.25	18	25.6000	38.0000	0.2500	1.0000	A572-65 (65 ksi)
L2	35.00-1.00	39.25		18	35.8725	48.0400	0.3750	1.5000	A572-65 (65 ksi)

Tapered Pole Properties

Section	Tip Dia. in	Area in^2	I in^4	r in	C in	I/C in^3	J in^4	It/Q in^2	w in	w/t
L1	25.9564	20.1152	1633.1207	8.9993	13.0048	125.5783	3268.3902	10.0595	4.0656	16.262
	38.5476	29.9546	5393.0600	13.4012	19.3040	279.3753	10793.2163	14.9802	6.2480	24.992
L2	38.0206	42.2509	6726.1871	12.6016	18.2232	369.0996	13461.2247	21.1295	5.6536	15.076
	48.7232	56.7333	16284.5001	16.9211	24.4043	667.2794	32590.4279	28.3720	7.7950	20.787

Tower Elevation ft	Gusset Area (per face) ft^2	Gusset Thickness in	Gusset Grade	Adjust. Factor A_f	Adjust. Factor A_s	Weight Mult.	Double Angle Stitch Bolt Spacing Diagonals in	Double Angle Stitch Bolt Spacing Horizontals in	Double Angle Stitch Bolt Spacing Redundants in
L1 75.00-35.00				1	1	1			
L2 35.00-1.00				1	1	1			

Feed Line/Linear Appurtenances - Entered As Area

Description	Face or Leg	Allow Shield	Exclude From Torque Calculation	Component Type	Placement ft	Total Number		C_AA_A ft^2/ft	Weight plf
6x12 hybrid fiber low inductance	B	No	Yes	Inside Pole	70.00 - 1.00	4	No Ice	0.00	1.85
6x12 hybrid fiber low inductance	B	No	Yes	Inside Pole	60.00 - 1.00	4	No Ice	0.00	1.85
6x12 hybrid fiber low inductance	B	No	Yes	Inside Pole	50.00 - 1.00	4	No Ice	0.00	1.85

Feed Line/Linear Appurtenances Section Areas

Tower Section	Tower Elevation ft	Face	A_R ft^2	A_F ft^2	C_AA_A In Face ft^2	C_AA_A Out Face ft^2	Weight lb
L1	75.00-35.00	A	0.000	0.000	0.000	0.000	0.00
		B	0.000	0.000	0.000	0.000	555.00
		C	0.000	0.000	0.000	0.000	0.00
L2	35.00-1.00	A	0.000	0.000	0.000	0.000	0.00
		B	0.000	0.000	0.000	0.000	754.80
		C	0.000	0.000	0.000	0.000	0.00

User Defined Loads

Description	Elevation ft	Offset From Centroid ft	Azimuth Angle °		Weight lb	F_x lb	F_z lb	Wind Force lb	C_AA_C ft^2
(21) 10 ft branches	23.70	0.00	0.0000	No Ice	882.00	0.00	0.00	**2903.47**	87.80
				Service	882.00	0.00	0.00	**707.16**	87.80
(22) 8 ft branches	31.30	0.00	0.0000	No Ice	748.00	0.00	0.00	**2647.28**	75.50
				Service	748.00	0.00	0.00	**644.77**	75.50
(35) 6 ft branches	41.30	0.00	0.0000	No Ice	875.00	0.00	0.00	**3486.62**	93.80
				Service	875.00	0.00	0.00	**849.19**	93.80
(22) 8 ft branches	51.40	0.00	0.0000	No Ice	748.00	0.00	0.00	**2895.86**	74.40
				Service	748.00	0.00	0.00	**705.31**	74.40
(34) 6 ft branches	61.30	0.00	0.0000	No Ice	850.00	0.00	0.00	**3615.20**	89.50
				Service	850.00	0.00	0.00	**880.51**	89.50
(22) 8 ft branches	71.10	0.00	0.0000	No Ice	748.00	0.00	0.00	**3058.90**	73.40
				Service	748.00	0.00	0.00	**745.02**	73.40
Top crown with (1) 5 ft and (3) 3 ft branches	77.50	0.00	0.0000	No Ice	75.00	0.00	0.00	**865.73**	20.40
				Service	75.00	0.00	0.00	**210.85**	20.40
(6) 4 ft antenna branches	70.00	0.00	0.0000	No Ice	138.00	0.00	0.00	**0.00**	0.00
				Service	138.00	0.00	0.00	**0.00**	0.00
(24) 2 ft tip branches	70.00	0.00	0.0000	No Ice	240.00	0.00	0.00	**0.00**	0.00
				Service	240.00	0.00	0.00	**0.00**	0.00

Discrete Tower Loads

Description	Face or Leg	Offset Type	Offsets: Horz Lateral Vert ft ft ft	Azimuth Adjustment °	Placement ft		C_AA_A Front ft^2	C_AA_A Side ft^2	Weight lb
***									
(4) 96x20x9 + MP	A	From Face	3.00 0.00 0.00	0.0000	70.00	No Ice	17.36	11.43	161.32
(4) 96x20x9 + MP	B	From Face	3.00 0.00 0.00	0.0000	70.00	No Ice	17.36	11.43	161.32
(4) 96x20x9 + MP	C	From Face	3.00 0.00 0.00	0.0000	70.00	No Ice	17.36	11.43	161.32
(5) 28x19x11 RRU/H	A	From Face	3.00 0.00 0.00	0.0000	70.00	No Ice	4.43	2.57	75.00
(5) 28x19x11 RRU/H	B	From Face	3.00 0.00 0.00	0.0000	70.00	No Ice	4.43	2.57	75.00
(5) 28x19x11 RRU/H	C	From Face	3.00 0.00 0.00	0.0000	70.00	No Ice	4.43	2.57	75.00
29x16x11 Surge/Raycap/J-Box + MP	A	From Face	3.00 0.00 0.00	0.0000	70.00	No Ice	3.88	3.13	49.13
29x16x11 Surge/Raycap/J-Box + MP	B	From Face	3.00 0.00 0.00	0.0000	70.00	No Ice	3.88	3.13	49.13
29x16x11 Surge/Raycap/J-Box + MP	C	From Face	3.00 0.00	0.0000	70.00	No Ice	3.88	3.13	49.13

Description	Face or Leg	Offset Type	Offsets: Horz Lateral Vert ft ft ft	Azimuth Adjustment °	Placement ft		C_AA_A Front ft^2	C_AA_A Side ft^2	Weight lb
			0.00						
9'-6" T-Arm	A	From Face	3.00 0.00 0.00	0.0000	70.00	No Ice	10.03	5.68	342.00
9'-6" T-Arm	B	From Face	3.00 0.00 0.00	0.0000	70.00	No Ice	10.03	5.68	342.00
9'-6" T-Arm	C	From Face	3.00 0.00 0.00	0.0000	70.00	No Ice	10.03	5.68	342.00
***									
(4) 96x20x9 + MP	A	From Face	3.00 0.00 0.00	0.0000	60.00	No Ice	17.36	11.43	161.32
(4) 96x20x9 + MP	B	From Face	3.00 0.00 0.00	0.0000	60.00	No Ice	17.36	11.43	161.32
(4) 96x20x9 + MP	C	From Face	3.00 0.00 0.00	0.0000	60.00	No Ice	17.36	11.43	161.32
(5) 28x19x11 RRU/H	A	From Face	3.00 0.00 0.00	0.0000	60.00	No Ice	4.43	2.57	75.00
(5) 28x19x11 RRU/H	B	From Face	3.00 0.00 0.00	0.0000	60.00	No Ice	4.43	2.57	75.00
(5) 28x19x11 RRU/H	C	From Face	3.00 0.00 0.00	0.0000	60.00	No Ice	4.43	2.57	75.00
29x16x11 Surge/Raycap/J-Box + MP	A	From Face	3.00 0.00 0.00	0.0000	60.00	No Ice	3.88	3.13	49.13
29x16x11 Surge/Raycap/J-Box + MP	B	From Face	3.00 0.00 0.00	0.0000	60.00	No Ice	3.88	3.13	49.13
29x16x11 Surge/Raycap/J-Box + MP	C	From Face	3.00 0.00 0.00	0.0000	60.00	No Ice	3.88	3.13	49.13
9'-6" T-Arm	A	From Face	3.00 0.00 0.00	0.0000	60.00	No Ice	10.03	5.68	342.00
9'-6" T-Arm	B	From Face	3.00 0.00 0.00	0.0000	60.00	No Ice	10.03	5.68	342.00
9'-6" T-Arm	C	From Face	3.00 0.00 0.00	0.0000	60.00	No Ice	10.03	5.68	342.00
***									
(4) 96x20x9 + MP	A	From Face	3.00 0.00 0.00	0.0000	50.00	No Ice	17.36	11.43	161.32
(4) 96x20x9 + MP	B	From Face	3.00 0.00 0.00	0.0000	50.00	No Ice	17.36	11.43	161.32
(4) 96x20x9 + MP	C	From Face	3.00 0.00 0.00	0.0000	50.00	No Ice	17.36	11.43	161.32

Description	Face or Leg	Offset Type	Offsets: Horz Lateral Vert ft ft ft	Azimuth Adjustment °	Placement ft		C_AA_A Front ft^2	C_AA_A Side ft^2	Weight lb
(5) 28x19x11 RRU/H	A	From Face	3.00 0.00 0.00	0.0000	50.00	No Ice	4.43	2.57	75.00
(5) 28x19x11 RRU/H	B	From Face	3.00 0.00 0.00	0.0000	50.00	No Ice	4.43	2.57	75.00
(5) 28x19x11 RRU/H	C	From Face	3.00 0.00 0.00	0.0000	50.00	No Ice	4.43	2.57	75.00
29x16x11 Surge/Raycap/J-Box + MP	A	From Face	3.00 0.00 0.00	0.0000	50.00	No Ice	3.88	3.13	49.13
29x16x11 Surge/Raycap/J-Box + MP	B	From Face	3.00 0.00 0.00	0.0000	50.00	No Ice	3.88	3.13	49.13
29x16x11 Surge/Raycap/J-Box + MP	C	From Face	3.00 0.00 0.00	0.0000	50.00	No Ice	3.88	3.13	49.13
9'-6" T-Arm	A	From Face	3.00 0.00 0.00	0.0000	50.00	No Ice	10.03	5.68	342.00
9'-6" T-Arm	B	From Face	3.00 0.00 0.00	0.0000	50.00	No Ice	10.03	5.68	342.00
9'-6" T-Arm	C	From Face	3.00 0.00 0.00	0.0000	50.00	No Ice	10.03	5.68	342.00

Tower Pressures - No Ice

$G_H = 1.100$

Section Elevation ft	z ft	K_z	q_z psf	A_G ft^2	Face	A_F ft^2	A_R ft^2	A_{Leg} ft^2	Leg %	C_AA_A In Face ft^2	C_AA_A Out Face ft^2
L1 75.00-35.00	54.08	1.112	36	107.507	A	0.000	107.507	107.507	100.00	0.000	0.000
					B	0.000	107.507		100.00	0.000	0.000
					C	0.000	107.507		100.00	0.000	0.000
L2 35.00-1.00	17.80	0.88	29	122.887	A	0.000	122.887	122.887	100.00	0.000	0.000
					B	0.000	122.887		100.00	0.000	0.000
					C	0.000	122.887		100.00	0.000	0.000

Tower Pressure - Service

$G_H = 1.100$

Section Elevation ft	z ft	K_z	q_z psf	A_G ft^2	Face	A_F ft^2	A_R ft^2	A_{Leg} ft^2	Leg %	C_AA_A In Face ft^2	C_AA_A Out Face ft^2
L1 75.00-35.00	54.08	1.112	9	107.507	A	0.000	107.507	107.507	100.00	0.000	0.000
					B	0.000	107.507		100.00	0.000	0.000
					C	0.000	107.507		100.00	0.000	0.000
L2 35.00-1.00	17.80	0.88	7	122.887	A	0.000	122.887	122.887	100.00	0.000	0.000
					B	0.000	122.887		100.00	0.000	0.000
					C	0.000	122.887		100.00	0.000	0.000

Tower Forces - No Ice - Wind Normal To Face

Section Elevation ft	Add Weight lb	Self Weight lb	Face	e	C_F	q_z psf	D_F	D_R	A_E ft^2	F lb	w plf	Ctrl. Face
L1 75.00-35.00	555.00	3407.55	A	1	0.65	36	1	1	107.507	2737.34	68.43	C
			B	1	0.65		1	1	107.507			
			C	1	0.65		1	1	107.507			
L2 35.00-1.00	754.80	6610.14	A	1	0.65	29	1	1	122.887	2541.99	74.76	C
			B	1	0.65		1	1	122.887			
			C	1	0.65		1	1	122.887			
Sum Weight:	1309.80	10017.69						OTM	188004.25 lb-ft	5279.33		

Tower Forces - No Ice - Wind 45 To Face

Section Elevation ft	Add Weight lb	Self Weight lb	Face	e	C_F	q_z psf	D_F	D_R	A_E ft^2	F lb	w plf	Ctrl. Face
L1 75.00-35.00	555.00	3407.55	A	1	0.65	36	1	1	107.507	2737.34	68.43	C
			B	1	0.65		1	1	107.507			
			C	1	0.65		1	1	107.507			
L2 35.00-1.00	754.80	6610.14	A	1	0.65	29	1	1	122.887	2541.99	74.76	C
			B	1	0.65		1	1	122.887			
			C	1	0.65		1	1	122.887			
Sum Weight:	1309.80	10017.69						OTM	188004.25 lb-ft	5279.33		

Tower Forces - No Ice - Wind 60 To Face

Section Elevation ft	Add Weight lb	Self Weight lb	Face	e	C_F	q_z psf	D_F	D_R	A_E ft^2	F lb	w plf	Ctrl. Face
L1 75.00-35.00	555.00	3407.55	A	1	0.65	36	1	1	107.507	2737.34	68.43	C
			B	1	0.65		1	1	107.507			
			C	1	0.65		1	1	107.507			

Section Elevation ft	Add Weight lb	Self Weight lb	Face	e	C_F	q_z psf	D_F	D_R	A_E ft²	F lb	w plf	Ctrl. Face
L2 35.00-1.00	754.80	6610.14	A	1	0.65	29	1	1	122.887	2541.99	74.76	C
			B	1	0.65		1	1	122.887			
			C	1	0.65		1	1	122.887			
Sum Weight:	1309.80	10017.69						OTM	188004.25 lb-ft	5279.33		

Tower Forces - No Ice - Wind 90 To Face

Section Elevation ft	Add Weight lb	Self Weight lb	Face	e	C_F	q_z psf	D_F	D_R	A_E ft²	F lb	w plf	Ctrl. Face
L1	555.00	3407.55	A	1	0.65	36	1	1	107.507	2737.34	68.43	C
75.00-35.00			B	1	0.65		1	1	107.507			
			C	1	0.65		1	1	107.507			
L2 35.00-1.00	754.80	6610.14	A	1	0.65	29	1	1	122.887	2541.99	74.76	C
			B	1	0.65		1	1	122.887			
			C	1	0.65		1	1	122.887			
Sum Weight:	1309.80	10017.69						OTM	188004.25 lb-ft	5279.33		

Tower Forces - Service - Wind Normal To Face

Section Elevation ft	Add Weight lb	Self Weight lb	Face	e	C_F	q_z psf	D_F	D_R	A_E ft²	F lb	w plf	Ctrl. Face
L1	555.00	3407.55	A	1	0.65	9	1	1	107.507	666.70	16.67	C
75.00-35.00			B	1	0.65		1	1	107.507			
			C	1	0.65		1	1	107.507			
L2 35.00-1.00	754.80	6610.14	A	1	0.65	7	1	1	122.887	619.12	18.21	C
			B	1	0.65		1	1	122.887			
			C	1	0.65		1	1	122.887			
Sum Weight:	1309.80	10017.69						OTM	45789.91 lb-ft	1285.82		

Tower Forces - Service - Wind 45 To Face

Section Elevation ft	Add Weight lb	Self Weight lb	Face	e	C_F	q_z psf	D_F	D_R	A_E ft²	F lb	w plf	Ctrl. Face
L1	555.00	3407.55	A	1	0.65	9	1	1	107.507	666.70	16.67	C
75.00-35.00			B	1	0.65		1	1	107.507			

Section Elevation ft	Add Weight lb	Self Weight lb	Face	e	C_F	q_z psf	D_F	D_R	A_E ft²	F lb	w plf	Ctrl. Face
			C	1	0.65		1	1	107.507			
L2 35.00-1.00	754.80	6610.14	A	1	0.65	7	1	1	122.887	619.12	18.21	C
			B	1	0.65		1	1	122.887			
			C	1	0.65		1	1	122.887			
Sum Weight:	1309.80	10017.69						OTM	45789.91 lb-ft	1285.82		

Tower Forces - Service - Wind 60 To Face

Section Elevation ft	Add Weight lb	Self Weight lb	Face	e	C_F	q_z psf	D_F	D_R	A_E ft²	F lb	w plf	Ctrl. Face
L1	555.00	3407.55	A	1	0.65	9	1	1	107.507	666.70	16.67	C
75.00-35.00			B	1	0.65		1	1	107.507			
			C	1	0.65		1	1	107.507			
L2 35.00-1.00	754.80	6610.14	A	1	0.65	7	1	1	122.887	619.12	18.21	C
			B	1	0.65		1	1	122.887			
			C	1	0.65		1	1	122.887			
Sum Weight:	1309.80	10017.69						OTM	45789.91 lb-ft	1285.82		

Tower Forces - Service - Wind 90 To Face

Section Elevation ft	Add Weight lb	Self Weight lb	Face	e	C_F	q_z psf	D_F	D_R	A_E ft²	F lb	w plf	Ctrl. Face
L1	555.00	3407.55	A	1	0.65	9	1	1	107.507	666.70	16.67	C
75.00-35.00			B	1	0.65		1	1	107.507			
			C	1	0.65		1	1	107.507			
L2 35.00-1.00	754.80	6610.14	A	1	0.65	7	1	1	122.887	619.12	18.21	C
			B	1	0.65		1	1	122.887			
			C	1	0.65		1	1	122.887			
Sum Weight:	1309.80	10017.69						OTM	45789.91 lb-ft	1285.82		

Discrete Appurtenance Pressures - No Ice $G_H = 1.100$

Description	Aiming Azimuth °	Weight lb	Offset, ft	Offset, ft	z ft	K_z	q_z psf	C_AA_C Front ft²	C_AA_C Side ft²
96x20x9 + MP	300.0000	645.28	-3.58	-2.07	70.00	1.174	38	69.45	45.73
96x20x9 + MP	60.0000	645.28	3.58	-2.07	70.00	1.174	38	69.45	45.73

Description	Aiming Azimuth °	Weight lb	$Offset_x$ ft	$Offset_z$ ft	z ft	K_z	q_z psf	C_AA_C Front ft^2	C_AA_C Side ft^2
96x20x9 + MP	180.0000	645.28	0.00	4.13	70.00	1.174	38	69.45	45.73
28x19x11 RRU/H	300.0000	375.00	-3.58	-2.07	70.00	1.174	38	22.17	12.85
28x19x11 RRU/H	60.0000	375.00	3.58	-2.07	70.00	1.174	38	22.17	12.85
28x19x11 RRU/H	180.0000	375.00	0.00	4.13	70.00	1.174	38	22.17	12.85
29x16x11 Surge/Raycap/J-Box + MP	300.0000	49.13	-3.58	-2.07	70.00	1.174	38	3.88	3.13
29x16x11 Surge/Raycap/J-Box + MP	60.0000	49.13	3.58	-2.07	70.00	1.174	38	3.88	3.13
29x16x11 Surge/Raycap/J-Box + MP	180.0000	49.13	0.00	4.13	70.00	1.174	38	3.88	3.13
9'-6" T-Arm	300.0000	342.00	-3.58	-2.07	70.00	1.174	38	10.03	5.68
9'-6" T-Arm	60.0000	342.00	3.58	-2.07	70.00	1.174	38	10.03	5.68
9'-6" T-Arm	180.0000	342.00	0.00	4.13	70.00	1.174	38	10.03	5.68
96x20x9 + MP	300.0000	645.28	-3.69	-2.13	60.00	1.137	37	69.45	45.73
96x20x9 + MP	60.0000	645.28	3.69	-2.13	60.00	1.137	37	69.45	45.73
96x20x9 + MP	180.0000	645.28	0.00	4.26	60.00	1.137	37	69.45	45.73
28x19x11 RRU/H	300.0000	375.00	-3.69	-2.13	60.00	1.137	37	22.17	12.85
28x19x11 RRU/H	60.0000	375.00	3.69	-2.13	60.00	1.137	37	22.17	12.85
28x19x11 RRU/H	180.0000	375.00	0.00	4.26	60.00	1.137	37	22.17	12.85
29x16x11 Surge/Raycap/J-Box + MP	300.0000	49.13	-3.69	-2.13	60.00	1.137	37	3.88	3.13
29x16x11 Surge/Raycap/J-Box + MP	60.0000	49.13	3.69	-2.13	60.00	1.137	37	3.88	3.13
29x16x11 Surge/Raycap/J-Box + MP	180.0000	49.13	0.00	4.26	60.00	1.137	37	3.88	3.13
9'-6" T-Arm	300.0000	342.00	-3.69	-2.13	60.00	1.137	37	10.03	5.68
9'-6" T-Arm	60.0000	342.00	3.69	-2.13	60.00	1.137	37	10.03	5.68
9'-6" T-Arm	180.0000	342.00	0.00	4.26	60.00	1.137	37	10.03	5.68
96x20x9 + MP	300.0000	645.28	-3.80	-2.19	50.00	1.094	35	69.45	45.73
96x20x9 + MP	60.0000	645.28	3.80	-2.19	50.00	1.094	35	69.45	45.73
96x20x9 + MP	180.0000	645.28	0.00	4.39	50.00	1.094	35	69.45	45.73
28x19x11 RRU/H	300.0000	375.00	-3.80	-2.19	50.00	1.094	35	22.17	12.85
28x19x11 RRU/H	60.0000	375.00	3.80	-2.19	50.00	1.094	35	22.17	12.85
28x19x11 RRU/H	180.0000	375.00	0.00	4.39	50.00	1.094	35	22.17	12.85
29x16x11 Surge/Raycap/J-Box + MP	300.0000	49.13	-3.80	-2.19	50.00	1.094	35	3.88	3.13
29x16x11 Surge/Raycap/J-Box + MP	60.0000	49.13	3.80	-2.19	50.00	1.094	35	3.88	3.13
29x16x11 Surge/Raycap/J-Box + MP	180.0000	49.13	0.00	4.39	50.00	1.094	35	3.88	3.13
9'-6" T-Arm	300.0000	342.00	-3.80	-2.19	50.00	1.094	35	10.03	5.68
9'-6" T-Arm	60.0000	342.00	3.80	-2.19	50.00	1.094	35	10.03	5.68
9'-6" T-Arm	180.0000	342.00	0.00	4.39	50.00	1.094	35	10.03	5.68
	Sum Weight:	12702.69							

Discrete Appurtenance Pressures - Service $G_H = 1.100$

Description	Aiming Azimuth °	Weight lb	$Offset_x$ ft	$Offset_z$ ft	z ft	K_z	q_z psf	C_AA_C Front ft^2	C_AA_C Side ft^2
96x20x9 + MP	300.0000	645.28	-3.58	-2.07	70.00	1.174	9	69.45	45.73
96x20x9 + MP	60.0000	645.28	3.58	-2.07	70.00	1.174	9	69.45	45.73
96x20x9 + MP	180.0000	645.28	0.00	4.13	70.00	1.174	9	69.45	45.73
28x19x11 RRU/H	300.0000	375.00	-3.58	-2.07	70.00	1.174	9	22.17	12.85
28x19x11 RRU/H	60.0000	375.00	3.58	-2.07	70.00	1.174	9	22.17	12.85
28x19x11 RRU/H	180.0000	375.00	0.00	4.13	70.00	1.174	9	22.17	12.85
29x16x11 Surge/Raycap/J-Box + MP	300.0000	49.13	-3.58	-2.07	70.00	1.174	9	3.88	3.13
29x16x11 Surge/Raycap/J-Box + MP	60.0000	49.13	3.58	-2.07	70.00	1.174	9	3.88	3.13
29x16x11 Surge/Raycap/J-Box + MP	180.0000	49.13	0.00	4.13	70.00	1.174	9	3.88	3.13
9'-6" T-Arm	300.0000	342.00	-3.58	-2.07	70.00	1.174	9	10.03	5.68
9'-6" T-Arm	60.0000	342.00	3.58	-2.07	70.00	1.174	9	10.03	5.68
9'-6" T-Arm	180.0000	342.00	0.00	4.13	70.00	1.174	9	10.03	5.68
96x20x9 + MP	300.0000	645.28	-3.69	-2.13	60.00	1.137	9	69.45	45.73
96x20x9 + MP	60.0000	645.28	3.69	-2.13	60.00	1.137	9	69.45	45.73
96x20x9 + MP	180.0000	645.28	0.00	4.26	60.00	1.137	9	69.45	45.73
28x19x11 RRU/H	300.0000	375.00	-3.69	-2.13	60.00	1.137	9	22.17	12.85
28x19x11 RRU/H	60.0000	375.00	3.69	-2.13	60.00	1.137	9	22.17	12.85
28x19x11 RRU/H	180.0000	375.00	0.00	4.26	60.00	1.137	9	22.17	12.85
29x16x11 Surge/Raycap/J-Box + MP	300.0000	49.13	-3.69	-2.13	60.00	1.137	9	3.88	3.13
29x16x11 Surge/Raycap/J-Box + MP	60.0000	49.13	3.69	-2.13	60.00	1.137	9	3.88	3.13
29x16x11 Surge/Raycap/J-Box + MP	180.0000	49.13	0.00	4.26	60.00	1.137	9	3.88	3.13
9'-6" T-Arm	300.0000	342.00	-3.69	-2.13	60.00	1.137	9	10.03	5.68
9'-6" T-Arm	60.0000	342.00	3.69	-2.13	60.00	1.137	9	10.03	5.68
9'-6" T-Arm	180.0000	342.00	0.00	4.26	60.00	1.137	9	10.03	5.68
96x20x9 + MP	300.0000	645.28	-3.80	-2.19	50.00	1.094	9	69.45	45.73
96x20x9 + MP	60.0000	645.28	3.80	-2.19	50.00	1.094	9	69.45	45.73
96x20x9 + MP	180.0000	645.28	0.00	4.39	50.00	1.094	9	69.45	45.73
28x19x11 RRU/H	300.0000	375.00	-3.80	-2.19	50.00	1.094	9	22.17	12.85
28x19x11 RRU/H	60.0000	375.00	3.80	-2.19	50.00	1.094	9	22.17	12.85
28x19x11 RRU/H	180.0000	375.00	0.00	4.39	50.00	1.094	9	22.17	12.85
29x16x11 Surge/Raycap/J-Box + MP	300.0000	49.13	-3.80	-2.19	50.00	1.094	9	3.88	3.13
29x16x11 Surge/Raycap/J-Box + MP	60.0000	49.13	3.80	-2.19	50.00	1.094	9	3.88	3.13
29x16x11 Surge/Raycap/J-Box + MP	180.0000	49.13	0.00	4.39	50.00	1.094	9	3.88	3.13
9'-6" T-Arm	300.0000	342.00	-3.80	-2.19	50.00	1.094	9	10.03	5.68
9'-6" T-Arm	60.0000	342.00	3.80	-2.19	50.00	1.094	9	10.03	5.68
9'-6" T-Arm	180.0000	342.00	0.00	4.39	50.00	1.094	9	10.03	5.68
	Sum Weight:	12702.69							

Force Totals

Load Case	Vertical Forces lb	Sum of Forces X lb	Sum of Forces Z lb	Sum of Overturning Moments, M_x lb-ft	Sum of Overturning Moments, M_z lb-ft	Sum of Torques lb-ft
Leg Weight	10017.69					
Bracing Weight	0.00					
Total Member Self-Weight	10017.69			0.00	0.00	
Total Weight	29334.18			0.00	0.00	
Wind 0 deg - No Ice		0.00	-49746.73	-2599801.96	0.00	0.00
Wind 30 deg - No Ice		24873.37	-43081.94	-2251494.55	-1299900.98	0.00
Wind 45 deg - No Ice		35176.25	-35176.25	-1838337.60	-1838337.60	0.00
Wind 60 deg - No Ice		43081.94	-24873.37	-1299900.98	-2251494.55	0.00
Wind 90 deg - No Ice		49746.73	0.00	0.00	-2599801.96	0.00
Wind 120 deg - No Ice		43081.94	24873.37	1299900.98	-2251494.55	0.00
Wind 135 deg - No Ice		35176.25	35176.25	1838337.60	-1838337.60	0.00
Wind 150 deg - No Ice		24873.37	43081.94	2251494.55	-1299900.98	0.00
Wind 180 deg - No Ice		0.00	49746.73	2599801.96	0.00	0.00
Wind 210 deg - No Ice		-24873.37	43081.94	2251494.55	1299900.98	0.00
Wind 225 deg - No Ice		-35176.25	35176.25	1838337.60	1838337.60	0.00
Wind 240 deg - No Ice		-43081.94	24873.37	1299900.98	2251494.55	0.00
Wind 270 deg - No Ice		-49746.73	0.00	0.00	2599801.96	0.00
Wind 300 deg - No Ice		-43081.94	-24873.37	-1299900.98	2251494.55	0.00
Wind 315 deg - No Ice		-35176.25	-35176.25	-1838337.60	1838337.60	0.00
Wind 330 deg - No Ice		-24873.37	-43081.94	-2251494.55	1299900.98	0.00
Total Weight	29334.18			0.00	0.00	
Wind 0 deg - Service		0.00	-12116.21	-633202.19	0.00	0.00
Wind 30 deg - Service		6058.10	-10492.94	-548369.18	-316601.09	0.00
Wind 45 deg - Service		8567.45	-8567.45	-447741.56	-447741.56	0.00
Wind 60 deg - Service		10492.94	-6058.10	-316601.09	-548369.18	0.00
Wind 90 deg - Service		12116.21	0.00	0.00	-633202.19	0.00
Wind 120 deg - Service		10492.94	6058.10	316601.09	-548369.18	0.00
Wind 135 deg - Service		8567.45	8567.45	447741.56	-447741.56	0.00
Wind 150 deg - Service		6058.10	10492.94	548369.18	-316601.09	0.00
Wind 180 deg - Service		0.00	12116.21	633202.19	0.00	0.00
Wind 210 deg - Service		-6058.10	10492.94	548369.18	316601.09	0.00
Wind 225 deg - Service		-8567.45	8567.45	447741.56	447741.56	0.00
Wind 240 deg - Service		-10492.94	6058.10	316601.09	548369.18	0.00
Wind 270 deg - Service		-12116.21	0.00	0.00	633202.19	0.00
Wind 300 deg - Service		-10492.94	-6058.10	-316601.09	548369.18	0.00
Wind 315 deg - Service		-8567.45	-8567.45	-447741.56	447741.56	0.00
Wind 330 deg - Service		-6058.10	-10492.94	-548369.18	316601.09	0.00

Load Combinations

Comb. No.	Description
1	Dead Only
2	1.2 Dead+1.0 Wind 0 deg - No Ice
3	0.9 Dead+1.0 Wind 0 deg - No Ice
4	1.2 Dead+1.0 Wind 30 deg - No Ice
5	0.9 Dead+1.0 Wind 30 deg - No Ice
6	1.2 Dead+1.0 Wind 45 deg - No Ice
7	0.9 Dead+1.0 Wind 45 deg - No Ice
8	1.2 Dead+1.0 Wind 60 deg - No Ice
9	0.9 Dead+1.0 Wind 60 deg - No Ice
10	1.2 Dead+1.0 Wind 90 deg - No Ice
11	0.9 Dead+1.0 Wind 90 deg - No Ice
12	1.2 Dead+1.0 Wind 120 deg - No Ice
13	0.9 Dead+1.0 Wind 120 deg - No Ice

Comb. No.	Description
14	1.2 Dead+1.0 Wind 135 deg - No Ice
15	0.9 Dead+1.0 Wind 135 deg - No Ice
16	1.2 Dead+1.0 Wind 150 deg - No Ice
17	0.9 Dead+1.0 Wind 150 deg - No Ice
18	1.2 Dead+1.0 Wind 180 deg - No Ice
19	0.9 Dead+1.0 Wind 180 deg - No Ice
20	1.2 Dead+1.0 Wind 210 deg - No Ice
21	0.9 Dead+1.0 Wind 210 deg - No Ice
22	1.2 Dead+1.0 Wind 225 deg - No Ice
23	0.9 Dead+1.0 Wind 225 deg - No Ice
24	1.2 Dead+1.0 Wind 240 deg - No Ice
25	0.9 Dead+1.0 Wind 240 deg - No Ice
26	1.2 Dead+1.0 Wind 270 deg - No Ice
27	0.9 Dead+1.0 Wind 270 deg - No Ice
28	1.2 Dead+1.0 Wind 300 deg - No Ice
29	0.9 Dead+1.0 Wind 300 deg - No Ice
30	1.2 Dead+1.0 Wind 315 deg - No Ice
31	0.9 Dead+1.0 Wind 315 deg - No Ice
32	1.2 Dead+1.0 Wind 330 deg - No Ice
33	0.9 Dead+1.0 Wind 330 deg - No Ice
34	Dead+Wind 0 deg - Service
35	Dead+Wind 30 deg - Service
36	Dead+Wind 45 deg - Service
37	Dead+Wind 60 deg - Service
38	Dead+Wind 90 deg - Service
39	Dead+Wind 120 deg - Service
40	Dead+Wind 135 deg - Service
41	Dead+Wind 150 deg - Service
42	Dead+Wind 180 deg - Service
43	Dead+Wind 210 deg - Service
44	Dead+Wind 225 deg - Service
45	Dead+Wind 240 deg - Service
46	Dead+Wind 270 deg - Service
47	Dead+Wind 300 deg - Service
48	Dead+Wind 315 deg - Service
49	Dead+Wind 330 deg - Service

Maximum Member Forces

Section No.	Elevation ft	Component Type	Condition	Gov. Load Comb.	Axial lb	Major Axis Moment lb-ft	Minor Axis Moment lb-ft
L1	75 - 35	Pole	Max Tension	1	0.00	0.00	0.00
			Max. Compression	10	-22505.89	-792116.43	0.00
			Max. Mx	10	-22505.89	-792116.43	0.00
			Max. My	18	-22505.89	0.00	-792116.43
			Max. Vy	10	41909.66	-792116.43	0.00
			Max. Vx	18	41909.66	0.00	-792116.43
			Max. Torque	4			-0.01
L2	35 - 1	Pole	Max Tension	1	0.00	0.00	0.00
			Max. Compression	6	-35165.08	-1860532.36	1860532.36
			Max. Mx	10	-35165.05	-2631101.78	0.00
			Max. My	2	-35165.05	0.00	2631101.78
			Max. Vy	10	49770.74	-2631101.78	0.00
			Max. Vx	2	-49770.74	0.00	2631101.78
			Max. Torque	4			-0.01

Section No.	Elevation ft	Component Type	Condition	Gov. Load Comb.	Axial lb	Major Axis Moment lb-ft	Minor Axis Moment lb-ft

Maximum Reactions

Location	Condition	Gov. Load Comb.	Vertical lb	Horizontal, X lb	Horizontal, Z lb
Pole	Max. Vert	6	35201.01	-35176.24	35176.24
	Max. H_x	27	26400.74	49745.72	0.00
	Max. H_z	3	26400.74	0.00	49745.72
	Max. M_x	2	2631101.78	0.00	49745.33
	Max. M_z	10	2631101.78	-49745.33	0.00
	Max. Torsion	32	0.01	24873.30	43081.82
	Min. Vert	3	26400.74	0.00	49745.72
	Min. H_x	11	26400.74	-49745.72	0.00
	Min. H_z	19	26400.74	0.00	-49745.72
	Min. M_x	18	-2631101.78	0.00	-49745.33
	Min. M_z	26	-2631101.78	49745.33	0.00
	Min. Torsion	4	-0.01	-24873.30	43081.82

Tower Mast Reaction Summary

Load Combination	Vertical lb	$Shear_x$ lb	$Shear_z$ lb	Overturning Moment, M_x lb-ft	Overturning Moment, M_z lb-ft	Torque lb-ft
Dead Only	29334.18	0.00	0.00	0.00	0.00	0.00
1.2 Dead+1.0 Wind 0 deg - No Ice	35200.98	0.00	-49745.33	-2631101.78	0.00	0.00
0.9 Dead+1.0 Wind 0 deg - No Ice	26400.74	0.00	-49745.72	-2623006.88	0.00	0.00
1.2 Dead+1.0 Wind 30 deg - No Ice	35201.01	24873.30	-43081.82	-2278670.23	-1315590.94	0.01
0.9 Dead+1.0 Wind 30 deg - No Ice	26400.76	24873.32	-43081.85	-2271639.57	-1311531.78	0.01
1.2 Dead+1.0 Wind 45 deg - No Ice	35201.01	35176.24	-35176.24	-1860532.36	-1860532.36	0.00
0.9 Dead+1.0 Wind 45 deg - No Ice	26400.76	35176.18	-35176.18	-1854785.98	-1854785.98	0.00
1.2 Dead+1.0 Wind 60 deg - No Ice	35201.01	43081.82	-24873.30	-1315590.94	-2278670.23	-0.01
0.9 Dead+1.0 Wind 60 deg - No Ice	26400.76	43081.85	-24873.32	-1311531.78	-2271639.57	-0.01
1.2 Dead+1.0 Wind 90 deg - No Ice	35200.98	49745.33	0.00	0.00	-2631101.78	0.00
0.9 Dead+1.0 Wind 90 deg - No Ice	26400.74	49745.72	0.00	0.00	-2623006.88	0.00
1.2 Dead+1.0 Wind 120 deg - No Ice	35201.01	43081.82	24873.30	1315590.94	-2278670.23	0.01
0.9 Dead+1.0 Wind 120 deg - No Ice	26400.76	43081.85	24873.32	1311531.78	-2271639.57	0.01
1.2 Dead+1.0 Wind 135 deg - No Ice	35201.01	35176.24	35176.24	1860532.36	-1860532.36	0.00
0.9 Dead+1.0 Wind 135 deg - No Ice	26400.76	35176.18	35176.18	1854785.98	-1854785.98	0.00

Load Combination	Vertical lb	$Shear_x$ lb	$Shear_z$ lb	Overturning Moment, M_x lb-ft	Overturning Moment, M_z lb-ft	Torque lb-ft
1.2 Dead+1.0 Wind 150 deg - No Ice	35201.01	24873.30	43081.82	2278670.23	-1315590.94	-0.01
0.9 Dead+1.0 Wind 150 deg - No Ice	26400.76	24873.32	43081.85	2271639.57	-1311531.78	-0.01
1.2 Dead+1.0 Wind 180 deg - No Ice	35200.98	0.00	49745.33	2631101.78	0.00	0.00
0.9 Dead+1.0 Wind 180 deg - No Ice	26400.74	0.00	49745.72	2623006.88	0.00	0.00
1.2 Dead+1.0 Wind 210 deg - No Ice	35201.01	-24873.30	43081.82	2278670.23	1315590.94	0.01
0.9 Dead+1.0 Wind 210 deg - No Ice	26400.76	-24873.32	43081.85	2271639.57	1311531.78	0.01
1.2 Dead+1.0 Wind 225 deg - No Ice	35201.01	-35176.24	35176.24	1860532.36	1860532.36	0.00
0.9 Dead+1.0 Wind 225 deg - No Ice	26400.76	-35176.18	35176.18	1854785.98	1854785.98	0.00
1.2 Dead+1.0 Wind 240 deg - No Ice	35201.01	-43081.82	24873.30	1315590.94	2278670.23	-0.01
0.9 Dead+1.0 Wind 240 deg - No Ice	26400.76	-43081.85	24873.32	1311531.78	2271639.57	-0.01
1.2 Dead+1.0 Wind 270 deg - No Ice	35200.98	-49745.33	0.00	0.00	2631101.78	0.00
0.9 Dead+1.0 Wind 270 deg - No Ice	26400.74	-49745.72	0.00	0.00	2623006.88	0.00
1.2 Dead+1.0 Wind 300 deg - No Ice	35201.01	-43081.82	-24873.30	-1315590.94	2278670.23	0.01
0.9 Dead+1.0 Wind 300 deg - No Ice	26400.76	-43081.85	-24873.32	-1311531.78	2271639.57	0.01
1.2 Dead+1.0 Wind 315 deg - No Ice	35201.01	-35176.24	-35176.24	-1860532.36	1860532.36	0.00
0.9 Dead+1.0 Wind 315 deg - No Ice	26400.76	-35176.18	-35176.18	-1854785.98	1854785.98	0.00
1.2 Dead+1.0 Wind 330 deg - No Ice	35201.01	-24873.30	-43081.82	-2278670.23	1315590.94	-0.01
0.9 Dead+1.0 Wind 330 deg - No Ice	26400.76	-24873.32	-43081.85	-2271639.57	1311531.78	-0.01
Dead+Wind 0 deg - Service	29334.18	0.00	-12115.92	-639680.30	0.00	0.00
Dead+Wind 30 deg - Service	29334.18	6057.96	-10492.70	-553979.40	-319840.16	0.00
Dead+Wind 45 deg - Service	29334.18	8567.25	-8567.25	-452322.29	-452322.29	0.00
Dead+Wind 60 deg - Service	29334.18	10492.70	-6057.96	-319840.16	-553979.40	-0.00
Dead+Wind 90 deg - Service	29334.18	12115.92	0.00	0.00	-639680.30	0.00
Dead+Wind 120 deg - Service	29334.18	10492.70	6057.96	319840.16	-553979.40	0.00
Dead+Wind 135 deg - Service	29334.18	8567.25	8567.25	452322.29	-452322.29	0.00
Dead+Wind 150 deg - Service	29334.18	6057.96	10492.70	553979.40	-319840.16	-0.00
Dead+Wind 180 deg - Service	29334.18	0.00	12115.92	639680.30	0.00	0.00
Dead+Wind 210 deg - Service	29334.18	-6057.96	10492.70	553979.40	319840.16	0.00
Dead+Wind 225 deg - Service	29334.18	-8567.25	8567.25	452322.29	452322.29	0.00
Dead+Wind 240 deg - Service	29334.18	-10492.70	6057.96	319840.16	553979.40	-0.00
Dead+Wind 270 deg - Service	29334.18	-12115.92	0.00	0.00	639680.30	0.00
Dead+Wind 300 deg - Service	29334.18	-10492.70	-6057.96	-319840.16	553979.40	0.00
Dead+Wind 315 deg - Service	29334.18	-8567.25	-8567.25	-452322.29	452322.29	0.00
Dead+Wind 330 deg - Service	29334.18	-6057.96	-10492.70	-553979.40	319840.16	-0.00

Solution Summary

Load Comb.	Sum of Applied Forces PX lb	PY lb	PZ lb	Sum of Reactions PX lb	PY lb	PZ lb	% Error
1	0.00	-29334.18	0.00	0.00	29334.18	0.00	0.000%
2	0.00	-35201.01	-49746.73	0.00	35200.98	49745.33	0.002%
3	0.00	-26400.76	-49746.73	0.00	26400.74	49745.72	0.002%
4	24873.37	-35201.01	-43081.94	-24873.30	35201.01	43081.82	0.000%
5	24873.37	-26400.76	-43081.94	-24873.32	26400.76	43081.85	0.000%
6	35176.25	-35201.01	-35176.25	-35176.24	35201.01	35176.24	0.000%
7	35176.25	-26400.76	-35176.25	-35176.18	26400.76	35176.18	0.000%
8	43081.94	-35201.01	-24873.37	-43081.82	35201.01	24873.30	0.000%
9	43081.94	-26400.76	-24873.37	-43081.85	26400.76	24873.32	0.000%
10	49746.73	-35201.01	0.00	-49745.33	35200.98	0.00	0.002%
11	49746.73	-26400.76	0.00	-49745.72	26400.74	0.00	0.002%
12	43081.94	-35201.01	24873.37	-43081.82	35201.01	-24873.30	0.000%
13	43081.94	-26400.76	24873.37	-43081.85	26400.76	-24873.32	0.000%
14	35176.25	-35201.01	35176.25	-35176.24	35201.01	-35176.24	0.000%
15	35176.25	-26400.76	35176.25	-35176.18	26400.76	-35176.18	0.000%
16	24873.37	-35201.01	43081.94	-24873.30	35201.01	-43081.82	0.000%
17	24873.37	-26400.76	43081.94	-24873.32	26400.76	-43081.85	0.000%
18	0.00	-35201.01	49746.73	0.00	35200.98	-49745.33	0.002%
19	0.00	-26400.76	49746.73	0.00	26400.74	-49745.72	0.002%
20	-24873.37	-35201.01	43081.94	24873.30	35201.01	-43081.82	0.000%
21	-24873.37	-26400.76	43081.94	24873.32	26400.76	-43081.85	0.000%
22	-35176.25	-35201.01	35176.25	35176.24	35201.01	-35176.24	0.000%
23	-35176.25	-26400.76	35176.25	35176.18	26400.76	-35176.18	0.000%
24	-43081.94	-35201.01	24873.37	43081.82	35201.01	-24873.30	0.000%
25	-43081.94	-26400.76	24873.37	43081.85	26400.76	-24873.32	0.000%
26	-49746.73	-35201.01	0.00	49745.33	35200.98	0.00	0.002%
27	-49746.73	-26400.76	0.00	49745.72	26400.74	0.00	0.002%
28	-43081.94	-35201.01	-24873.37	43081.82	35201.01	24873.30	0.000%
29	-43081.94	-26400.76	-24873.37	43081.85	26400.76	24873.32	0.000%
30	-35176.25	-35201.01	-35176.25	35176.24	35201.01	35176.24	0.000%
31	-35176.25	-26400.76	-35176.25	35176.18	26400.76	35176.18	0.000%
32	-24873.37	-35201.01	-43081.94	24873.30	35201.01	43081.82	0.000%
33	-24873.37	-26400.76	-43081.94	24873.32	26400.76	43081.85	0.000%
34	0.00	-29334.18	-12116.21	0.00	29334.18	12115.92	0.001%
35	6058.10	-29334.18	-10492.94	-6057.96	29334.18	10492.70	0.001%
36	8567.45	-29334.18	-8567.45	-8567.25	29334.18	8567.25	0.001%
37	10492.94	-29334.18	-6058.10	-10492.70	29334.18	6057.96	0.001%
38	12116.21	-29334.18	0.00	-12115.92	29334.18	0.00	0.001%
39	10492.94	-29334.18	6058.10	-10492.70	29334.18	-6057.96	0.001%
40	8567.45	-29334.18	8567.45	-8567.25	29334.18	-8567.25	0.001%
41	6058.10	-29334.18	10492.94	-6057.96	29334.18	-10492.70	0.001%
42	0.00	-29334.18	12116.21	0.00	29334.18	-12115.92	0.001%
43	-6058.10	-29334.18	10492.94	6057.96	29334.18	-10492.70	0.001%
44	-8567.45	-29334.18	8567.45	8567.25	29334.18	-8567.25	0.001%
45	-10492.94	-29334.18	6058.10	10492.70	29334.18	-6057.96	0.001%
46	-12116.21	-29334.18	0.00	12115.92	29334.18	0.00	0.001%
47	-10492.94	-29334.18	-6058.10	10492.70	29334.18	6057.96	0.001%
48	-8567.45	-29334.18	-8567.45	8567.25	29334.18	8567.25	0.001%
49	-6058.10	-29334.18	-10492.94	6057.96	29334.18	10492.70	0.001%

Non-Linear Convergence Results

Load Combination	Converged?	Number of Cycles	Displacement Tolerance	Force Tolerance
1	Yes	6	0.00000001	0.00000001
2	Yes	7	0.00000001	0.00014747

3	Yes	7	0.00000001	0.00012170
4	Yes	8	0.00000001	0.00014738
5	Yes	8	0.00000001	0.00011229
6	Yes	9	0.00000001	0.00002471
7	Yes	8	0.00000001	0.00012877
8	Yes	8	0.00000001	0.00014738
9	Yes	8	0.00000001	0.00011229
10	Yes	7	0.00000001	0.00014747
11	Yes	7	0.00000001	0.00012170
12	Yes	8	0.00000001	0.00014738
13	Yes	8	0.00000001	0.00011229
14	Yes	9	0.00000001	0.00002471
15	Yes	8	0.00000001	0.00012877
16	Yes	8	0.00000001	0.00014738
17	Yes	8	0.00000001	0.00011229
18	Yes	7	0.00000001	0.00014747
19	Yes	7	0.00000001	0.00012170
20	Yes	8	0.00000001	0.00014738
21	Yes	8	0.00000001	0.00011229
22	Yes	9	0.00000001	0.00002471
23	Yes	8	0.00000001	0.00012877
24	Yes	8	0.00000001	0.00014738
25	Yes	8	0.00000001	0.00011229
26	Yes	7	0.00000001	0.00014747
27	Yes	7	0.00000001	0.00012170
28	Yes	8	0.00000001	0.00014738
29	Yes	8	0.00000001	0.00011229
30	Yes	9	0.00000001	0.00002471
31	Yes	8	0.00000001	0.00012877
32	Yes	8	0.00000001	0.00014738
33	Yes	8	0.00000001	0.00011229
34	Yes	7	0.00000001	0.00006238
35	Yes	7	0.00000001	0.00005443
36	Yes	7	0.00000001	0.00005150
37	Yes	7	0.00000001	0.00005443
38	Yes	7	0.00000001	0.00006238
39	Yes	7	0.00000001	0.00005443
40	Yes	7	0.00000001	0.00005150
41	Yes	7	0.00000001	0.00005443
42	Yes	7	0.00000001	0.00006238
43	Yes	7	0.00000001	0.00005443
44	Yes	7	0.00000001	0.00005150
45	Yes	7	0.00000001	0.00005443
46	Yes	7	0.00000001	0.00006238
47	Yes	7	0.00000001	0.00005443
48	Yes	7	0.00000001	0.00005150
49	Yes	7	0.00000001	0.00005443

Maximum Tower Deflections - Service Wind

Section No.	Elevation ft	Horz. Deflection in	Gov. Load Comb.	Tilt °	Twist °
L1	75 - 35	5.472	34	0.5671	0.0000
L2	40.25 - 1	1.733	34	0.3865	0.0000

Critical Deflections and Radius of Curvature - Service Wind

Elevation ft	Appurtenance	Gov. Load Comb.	Deflection in	Tilt °	Twist °	Radius of Curvature ft
77.50	Top crown with (1) 5 ft and (3) 3 ft branches	34	5.472	0.5671	0.0000	32440
71.10	(22) 8 ft branches	34	4.995	0.5511	0.0000	32440
70.00	(4) 96x20x9 + MP	34	4.861	0.5465	0.0000	32440
61.30	(34) 6 ft branches	34	3.826	0.5085	0.0000	11839
60.00	(4) 96x20x9 + MP	34	3.676	0.5025	0.0000	10813
51.40	(22) 8 ft branches	34	2.743	0.4583	0.0000	6875
50.00	(4) 96x20x9 + MP	34	2.603	0.4504	0.0000	6488
41.30	(35) 6 ft branches	34	1.816	0.3942	0.0000	4926
31.30	(22) 8 ft branches	34	1.132	0.3135	0.0000	6046
23.70	(21) 10 ft branches	40	0.748	0.2422	0.0000	8070

Maximum Tower Deflections - Design Wind

Section No.	Elevation ft	Horz. Deflection in	Gov. Load Comb.	Tilt °	Twist °
L1	75 - 35	22.514	10	2.3342	0.0000
L2	40.25 - 1	7.131	10	1.5906	0.0000

Critical Deflections and Radius of Curvature - Design Wind

Elevation ft	Appurtenance	Gov. Load Comb.	Deflection in	Tilt °	Twist °	Radius of Curvature ft
77.50	Top crown with (1) 5 ft and (3) 3 ft branches	10	22.514	2.3342	0.0000	7902
71.10	(22) 8 ft branches	10	20.552	2.2680	0.0000	7902
70.00	(4) 96x20x9 + MP	10	20.001	2.2492	0.0000	7902
61.30	(34) 6 ft branches	10	15.741	2.0930	0.0000	2883
60.00	(4) 96x20x9 + MP	10	15.126	2.0680	0.0000	2633
51.40	(22) 8 ft branches	10	11.288	1.8863	0.0000	1673
50.00	(4) 96x20x9 + MP	10	10.708	1.8534	0.0000	1579
41.30	(35) 6 ft branches	10	7.473	1.6220	0.0000	1198
31.30	(22) 8 ft branches	10	4.658	1.2900	0.0000	1470
23.70	(21) 10 ft branches	30	3.079	0.9965	0.0000	1962

Compression Checks

Pole Design Data

Section No.	Elevation ft	Size	L ft	L_u ft	Kl/r	A in^2	P_u lb	ϕP_n lb	Ratio $\frac{P_u}{\phi P_n}$
L1	75 - 73.1711	TP38x25.6x0.25	40.00	0.00	0.0	20.5651	-232.46	1514070.00	0.000
	73.1711 - 71.3421					21.0150	-413.55	1538310.00	0.000
	71.3421 - 69.5132					21.4649	-6549.95	1562180.00	0.004
	69.5132 - 67.6842					21.9148	-6738.72	1585660.00	0.004
	67.6842 - 65.8553					22.3647	-6932.05	1608760.00	0.004
	65.8553 - 64.0263					22.8146	-7129.91	1631490.00	0.004
	64.0263 - 62.1974					23.2645	-7332.21	1653830.00	0.004
	62.1974 - 60.3684					23.7144	-8415.65	1675790.00	0.005
	60.3684 - 58.5395					24.1643	-13381.20	1697370.00	0.008
	58.5395 - 56.7105					24.6142	-13604.70	1718580.00	0.008
	56.7105 - 54.8816					25.0641	-13834.50	1739400.00	0.008
	54.8816 - 53.0526					25.5139	-14070.40	1759840.00	0.008
	53.0526 - 51.2237					25.9638	-15105.50	1779900.00	0.008
	51.2237 - 49.3947					26.4137	-20153.80	1799580.00	0.011
	49.3947 - 47.5658					26.8636	-20419.60	1818880.00	0.011
	47.5658 - 45.7368					27.3135	-20692.90	1837800.00	0.011
	45.7368 - 43.9079					27.7634	-20973.60	1856350.00	0.011
	43.9079 - 42.0789					28.2133	-21261.20	1874510.00	0.011
	42.0789 - 40.25					28.6632	-22505.60	1892290.00	0.012
	40.25 - 35					29.9546	-9804.72	1941210.00	0.005
L2	40.25 - 35	TP48.04x35.8725x0.375	39.25	0.00	0.0	44.1880	-14401.90	3282950.00	0.004
	35 - 33.2105					44.8483	-24643.20	3328520.00	0.007
	33.2105 - 31.4211					45.5086	-25068.70	3364980.00	0.007
	31.4211 - 29.6316					46.1689	-26337.60	3401080.00	0.008
	29.6316 - 27.8421					46.8291	-26779.20	3436810.00	0.008
	27.8421 - 26.0526					47.4894	-27227.20	3472180.00	0.008
	26.0526 - 24.2632					48.1497	-27681.30	3507190.00	0.008
	24.2632 - 22.4737					48.8100	-29148.40	3541850.00	0.008
	22.4737 - 20.6842					49.4702	-29618.50	3576110.00	0.008
	20.6842 - 18.8947					50.1305	-30094.70	3610020.00	0.008
	18.8947 - 17.1053					50.7908	-30576.80	3643570.00	0.008
	17.1053 - 15.3158					51.4511	-31064.60	3676760.00	0.008

Section No.	Elevation ft	Size	L ft	L_u ft	K/r	A in^2	P_u lb	ϕP_n lb	Ratio $\frac{P_u}{\phi P_n}$
	15.3158 - 13.5263					52.1113	-31558.20	3709580.00	0.009
	13.5263 - 11.7368					52.7716	-32057.30	3742040.00	0.009
	11.7368 - 9.94737					53.4319	-32562.00	3774130.00	0.009
	9.94737 - 8.15789					54.0922	-33072.00	3805870.00	0.009
	8.15789 - 6.36842					54.7524	-33587.40	3837230.00	0.009
	6.36842 - 4.57895					55.4127	-34108.10	3868240.00	0.009
	4.57895 - 2.78947					56.0730	-34634.00	3898870.00	0.009
	2.78947 - 1					56.7333	-35165.10	3929150.00	0.009

Pole Bending Design Data

Section No.	Elevation ft	Size	M_{ux} lb-ft	ϕM_{nx} lb-ft	Ratio $\frac{M_{ux}}{\phi M_{nx}}$	M_{uy} lb-ft	ϕM_{ny} lb-ft	Ratio $\frac{M_{uy}}{\phi M_{ny}}$
L1	75 - 73.1711	TP38x25.6x0.25	3859.87	805477.50	0.005	0.00	805477.50	0.000
	73.1711 - 71.3421		5768.38	836450.00	0.007	0.00	836450.00	0.000
	71.3421 - 69.5132		17105.08	867783.33	0.020	0.00	867783.33	0.000
	69.5132 - 67.6842		41269.83	899458.33	0.046	0.00	899458.33	0.000
	67.6842 - 65.8553		65655.58	931458.33	0.070	0.00	931458.33	0.000
	65.8553 - 64.0263		90264.17	963791.67	0.094	0.00	963791.67	0.000
	64.0263 - 62.1974		115097.50	996416.67	0.116	0.00	996416.67	0.000
	62.1974 - 60.3684		143560.00	1029341.67	0.139	0.00	1029341.67	0.000
	60.3684 - 58.5395		187993.33	1062541.67	0.177	0.00	1062541.67	0.000
	58.5395 - 56.7105		235795.83	1096008.33	0.215	0.00	1096008.33	0.000
	56.7105 - 54.8816		283821.67	1129725.00	0.251	0.00	1129725.00	0.000
	54.8816 - 53.0526		332070.83	1163675.00	0.285	0.00	1163675.00	0.000
	53.0526 - 51.2237		381059.17	1197858.33	0.318	0.00	1197858.33	0.000
	51.2237 - 49.3947		440070.00	1232250.00	0.357	0.00	1232250.00	0.000
	49.3947 - 47.5658		509330.00	1266833.33	0.402	0.00	1266833.33	0.000
	47.5658 - 45.7368		578800.83	1301608.33	0.445	0.00	1301608.33	0.000
	45.7368 - 43.9079		648479.17	1336550.00	0.485	0.00	1336550.00	0.000
	43.9079 - 42.0789		718364.17	1371650.00	0.524	0.00	1371650.00	0.000

Section No.	Elevation ft	Size	M_{ux} lb-ft	ϕM_{nx} lb-ft	Ratio $\frac{M_{ux}}{\phi M_{nx}}$	M_{uy} lb-ft	ϕM_{ny} lb-ft	Ratio $\frac{M_{uy}}{\phi M_{ny}}$
	42.0789 - 40.25		792146.67	1406891.67	0.563	0.00	1406891.67	0.000
	40.25 - 35		417858.33	1508750.00	0.277	0.00	1508750.00	0.000
L2	40.25 - 35	TP48.04x35.8725x0.375	595284.17	2500683.33	0.238	0.00	2500683.33	0.000
	35 - 33.2105		1088925.00	2573658.33	0.423	0.00	2573658.33	0.000
	33.2105 - 31.4211		1164908.33	2640533.33	0.441	0.00	2640533.33	0.000
	31.4211 - 29.6316		1245525.00	2707958.33	0.460	0.00	2707958.33	0.000
	29.6316 - 27.8421		1326658.33	2775916.67	0.478	0.00	2775916.67	0.000
	27.8421 - 26.0526		1407983.33	2844400.00	0.495	0.00	2844400.00	0.000
	26.0526 - 24.2632		1489491.67	2913391.67	0.511	0.00	2913391.67	0.000
	24.2632 - 22.4737		1574758.33	2982891.67	0.528	0.00	2982891.67	0.000
	22.4737 - 20.6842		1661858.33	3052866.67	0.544	0.00	3052866.67	0.000
	20.6842 - 18.8947		1749133.33	3123325.00	0.560	0.00	3123325.00	0.000
	18.8947 - 17.1053		1836583.33	3194233.33	0.575	0.00	3194233.33	0.000
	17.1053 - 15.3158		1924200.00	3265600.00	0.589	0.00	3265600.00	0.000
	15.3158 - 13.5263		2012000.00	3337391.67	0.603	0.00	3337391.67	0.000
	13.5263 - 11.7368		2099958.33	3409616.67	0.616	0.00	3409616.67	0.000
	11.7368 - 9.94737		2188091.67	3482250.00	0.628	0.00	3482250.00	0.000
	9.94737 - 8.15789		2276383.33	3555275.00	0.640	0.00	3555275.00	0.000
	8.15789 - 6.36842		2364841.67	3628691.67	0.652	0.00	3628691.67	0.000
	6.36842 - 4.57895		2453466.67	3702475.00	0.663	0.00	3702475.00	0.000
	4.57895 - 2.78947		2542250.00	3776625.00	0.673	0.00	3776625.00	0.000
	2.78947 - 1		2631191.67	3851125.00	0.683	0.00	3851125.00	0.000

Pole Shear Design Data

Section No.	Elevation ft	Size	Actual V_u lb	ϕV_n lb	Ratio $\frac{V_u}{\phi V_n}$	Actual T_u lb-ft	ϕT_n lb-ft	Ratio $\frac{T_u}{\phi T_n}$
L1	75 - 73.1711	TP38x25.6x0.25	985.76	757035.00	0.001	0.00	1615266.67	0.000
	73.1711 - 71.3421		1103.59	769157.00	0.001	0.00	1677325.00	0.000
	71.3421 - 69.5132		13153.60	781088.00	0.017	0.00	1740100.00	0.000
	69.5132 - 67.6842		13274.30	792830.00	0.017	0.00	1803566.67	0.000
	67.6842 - 65.8553		13396.10	804382.00	0.017	0.00	1867700.00	0.000
	65.8553 -		13518.80	815743.00	0.017	0.00	1932466.67	0.000

Section No.	Elevation ft	Size	Actual V_u lb	ϕV_n lb	Ratio $\frac{V_u}{\phi V_n}$	Actual T_u lb-ft	ϕT_n lb-ft	Ratio $\frac{T_u}{\phi T_n}$
	64.0263							
	64.0263 - 62.1974		13642.50	826914.00	0.016	0.00	1997841.67	0.000
	62.1974 - 60.3684		17419.80	837895.00	0.021	0.00	2063800.00	0.000
	60.3684 - 58.5395		26080.90	848687.00	0.031	0.00	2130316.67	0.000
	58.5395 - 56.7105		26205.80	859288.00	0.030	0.00	2197358.33	0.000
	56.7105 - 54.8816		26326.50	869699.00	0.030	0.00	2264908.33	0.000
	54.8816 - 53.0526		26448.10	879920.00	0.030	0.00	2332933.33	0.000
	53.0526 - 51.2237		29497.10	889950.00	0.033	0.00	2401408.33	0.000
	51.2237 - 49.3947		37821.70	899791.00	0.042	0.00	2470308.33	0.000
	49.3947 - 47.5658		37938.40	909442.00	0.042	0.00	2539591.67	0.000
	47.5658 - 45.7368		38053.90	918902.00	0.041	0.00	2609258.33	0.000
	45.7368 - 43.9079		38168.50	928173.00	0.041	0.00	2679258.33	0.000
	43.9079 - 42.0789		38282.40	937253.00	0.041	0.00	2749575.00	0.000
	42.0789 - 40.25		41910.60	946143.00	0.044	0.00	2820175.00	0.000
	40.25 - 35		17569.00	970607.00	0.018	0.00	3024208.33	0.000
L2	40.25 - 35	TP48.04x35.8725x0.375	24749.90	1641470.00	0.015	0.00	5015100.00	0.000
	35 - 33.2105		42419.30	1664260.00	0.025	0.00	5161333.33	0.000
	33.2105 - 31.4211		42528.40	1682490.00	0.025	0.00	5295333.33	0.000
	31.4211 - 29.6316		45303.50	1700540.00	0.027	0.00	5430433.33	0.000
	29.6316 - 27.8421		45409.30	1718410.00	0.026	0.00	5566608.33	0.000
	27.8421 - 26.0526		45514.00	1736090.00	0.026	0.00	5703824.67	0.000
	26.0526 - 24.2632		45617.60	1753590.00	0.026	0.00	5842066.67	0.000
	24.2632 - 22.4737		48641.70	1770920.00	0.027	0.00	5981308.00	0.000
	22.4737 - 20.6842		48741.70	1788050.00	0.027	0.00	6121516.67	0.000
	20.6842 - 18.8947		48840.60	1805010.00	0.027	0.00	6262674.67	0.000
	18.8947 - 17.1053		48938.30	1821790.00	0.027	0.00	6404758.00	0.000
	17.1053 - 15.3158		49035.00	1838380.00	0.027	0.00	6547733.33	0.000
	15.3158 - 13.5263		49130.50	1854790.00	0.026	0.00	6691583.33	0.000
	13.5263 - 11.7368		49225.10	1871020.00	0.026	0.00	6836283.33	0.000
	11.7368 - 9.94737		49318.70	1887070.00	0.026	0.00	6981800.00	0.000
	9.94737 - 8.15789		49411.20	1902930.00	0.026	0.00	7128108.00	0.000
	8.15789 - 6.36842		49502.80	1918620.00	0.026	0.00	7275191.33	0.000

Section No.	Elevation ft	Size	Actual V_u lb	ϕV_n lb	Ratio $\frac{V_u}{\phi V_n}$	Actual T_u lb-ft	ϕT_n lb-ft	Ratio $\frac{T_u}{\phi T_n}$
	6.36842 - 4.57895		49593.50	1934120.00	0.026	0.00	7423024.67	0.000
	4.57895 - 2.78947		49683.30	1949440.00	0.025	0.00	7571574.67	0.000
	2.78947 - 1		49772.10	1964570.00	0.025	0.00	7720816.67	0.000

Pole Interaction Design Data

Section No.	Elevation ft	Ratio $\frac{P_u}{\phi P_n}$	Ratio $\frac{M_{ux}}{\phi M_{nx}}$	Ratio $\frac{M_{uy}}{\phi M_{ny}}$	Ratio $\frac{V_u}{\phi V_n}$	Ratio $\frac{T_u}{\phi T_n}$	Comb. Stress Ratio	Allow. Stress Ratio	Criteria
L1	75 - 73.1711	0.000	0.005	0.000	0.001	0.000	0.005 ✔	1.000	4.8.2 ✔
	73.1711 - 71.3421	0.000	0.007	0.000	0.001	0.000	0.007 ✔	1.000	4.8.2 ✔
	71.3421 - 69.5132	0.004	0.020	0.000	0.017	0.000	0.024 ✔	1.000	4.8.2 ✔
	69.5132 - 67.6842	0.004	0.046	0.000	0.017	0.000	0.050 ✔	1.000	4.8.2 ✔
	67.6842 - 65.8553	0.004	0.070	0.000	0.017	0.000	0.075 ✔	1.000	4.8.2 ✔
	65.8553 - 64.0263	0.004	0.094	0.000	0.017	0.000	0.098 ✔	1.000	4.8.2 ✔
	64.0263 - 62.1974	0.004	0.116	0.000	0.016	0.000	0.120 ✔	1.000	4.8.2 ✔
	62.1974 - 60.3684	0.005	0.139	0.000	0.021	0.000	0.145 ✔	1.000	4.8.2 ✔
	60.3684 - 58.5395	0.008	0.177	0.000	0.031	0.000	0.186 ✔	1.000	4.8.2 ✔
	58.5395 - 56.7105	0.008	0.215	0.000	0.030	0.000	0.224 ✔	1.000	4.8.2 ✔
	56.7105 - 54.8816	0.008	0.251	0.000	0.030	0.000	0.260 ✔	1.000	4.8.2 ✔
	54.8816 - 53.0526	0.008	0.285	0.000	0.030	0.000	0.294 ✔	1.000	4.8.2 ✔
	53.0526 - 51.2237	0.008	0.318	0.000	0.033	0.000	0.328 ✔	1.000	4.8.2 ✔
	51.2237 - 49.3947	0.011	0.357	0.000	0.042	0.000	0.370 ✔	1.000	4.8.2 ✔
	49.3947 - 47.5658	0.011	0.402	0.000	0.042	0.000	0.415 ✔	1.000	4.8.2 ✔
	47.5658 - 45.7368	0.011	0.445	0.000	0.041	0.000	0.458 ✔	1.000	4.8.2 ✔
	45.7368 - 43.9079	0.011	0.485	0.000	0.041	0.000	0.498 ✔	1.000	4.8.2 ✔
	43.9079 - 42.0789	0.011	0.524	0.000	0.041	0.000	0.537 ✔	1.000	4.8.2 ✔
	42.0789 - 40.25	0.012	0.563	0.000	0.044	0.000	0.577 ✔	1.000	4.8.2 ✔

Section No.	Elevation ft	Ratio $P_u / \phi P_n$	Ratio $M_{ux} / \phi M_{nx}$	Ratio $M_{uy} / \phi M_{ny}$	Ratio $V_u / \phi V_n$	Ratio $T_u / \phi T_n$	Comb. Stress Ratio	Allow. Stress Ratio	Criteria
	40.25 - 35	0.005	0.277	0.000	0.018	0.000	0.282 ✔	1.000	4.8.2 ✔
L2	40.25 - 35	0.004	0.238	0.000	0.015	0.000	0.243 ✔	1.000	4.8.2 ✔
	35 - 33.2105	0.007	0.423	0.000	0.025	0.000	0.431 ✔	1.000	4.8.2 ✔
	33.2105 - 31.4211	0.007	0.441	0.000	0.025	0.000	0.449 ✔	1.000	4.8.2 ✔
	31.4211 - 29.6316	0.008	0.460	0.000	0.027	0.000	0.468 ✔	1.000	4.8.2 ✔
	29.6316 - 27.8421	0.008	0.478	0.000	0.026	0.000	0.486 ✔	1.000	4.8.2 ✔
	27.8421 - 26.0526	0.008	0.495	0.000	0.026	0.000	0.504 ✔	1.000	4.8.2 ✔
	26.0526 - 24.2632	0.008	0.511	0.000	0.026	0.000	0.520 ✔	1.000	4.8.2 ✔
	24.2632 - 22.4737	0.008	0.528	0.000	0.027	0.000	0.537 ✔	1.000	4.8.2 ✔
	22.4737 - 20.6842	0.008	0.544	0.000	0.027	0.000	0.553 ✔	1.000	4.8.2 ✔
	20.6842 - 18.8947	0.008	0.560	0.000	0.027	0.000	0.569 ✔	1.000	4.8.2 ✔
	18.8947 - 17.1053	0.008	0.575	0.000	0.027	0.000	0.584 ✔	1.000	4.8.2 ✔
	17.1053 - 15.3158	0.008	0.589	0.000	0.027	0.000	0.598 ✔	1.000	4.8.2 ✔
	15.3158 - 13.5263	0.009	0.603	0.000	0.026	0.000	0.612 ✔	1.000	4.8.2 ✔
	13.5263 - 11.7368	0.009	0.616	0.000	0.026	0.000	0.625 ✔	1.000	4.8.2 ✔
	11.7368 - 9.94737	0.009	0.628	0.000	0.026	0.000	0.638 ✔	1.000	4.8.2 ✔
	9.94737 - 8.15789	0.009	0.640	0.000	0.026	0.000	0.650 ✔	1.000	4.8.2 ✔
	8.15789 - 6.36842	0.009	0.652	0.000	0.026	0.000	0.661 ✔	1.000	4.8.2 ✔
	6.36842 - 4.57895	0.009	0.663	0.000	0.026	0.000	0.672 ✔	1.000	4.8.2 ✔
	4.57895 - 2.78947	0.009	0.673	0.000	0.025	0.000	0.683 ✔	1.000	4.8.2 ✔
	2.78947 - 1	0.009	0.683	0.000	0.025	0.000	0.693 ✔	1.000	4.8.2 ✔

Section Capacity Table

Section No.	Elevation ft	Component Type	Size	Critical Element	P lb	αP_{allow} lb	% Capacity	Pass Fail

Section No.	Elevation ft	Component Type	Size	Critical Element	P lb	αP_{allow} lb	% Capacity	Pass Fail
L1	75 - 35	Pole	TP38x25.6x0.25	1	-22505.60	1892290.00	57.7	Pass
L2	35 - 1	Pole	TP48.04x35.8725x0.375	2	-35165.10	3929150.00	69.3	Pass
							Summary	
						Pole (L2)	69.3	Pass
						RATING =	**69.3**	**Pass**

Program Version 8.0.7.4 - 5/11/2020 File:P:/1.0 Projects/2020/A1212 Cell Trees/A1212-0449-201 (20-027) SJC Parking Lot (80' Monopine, Santa Fe NM)/ENG/Tower/SJC Parking Lot.eri

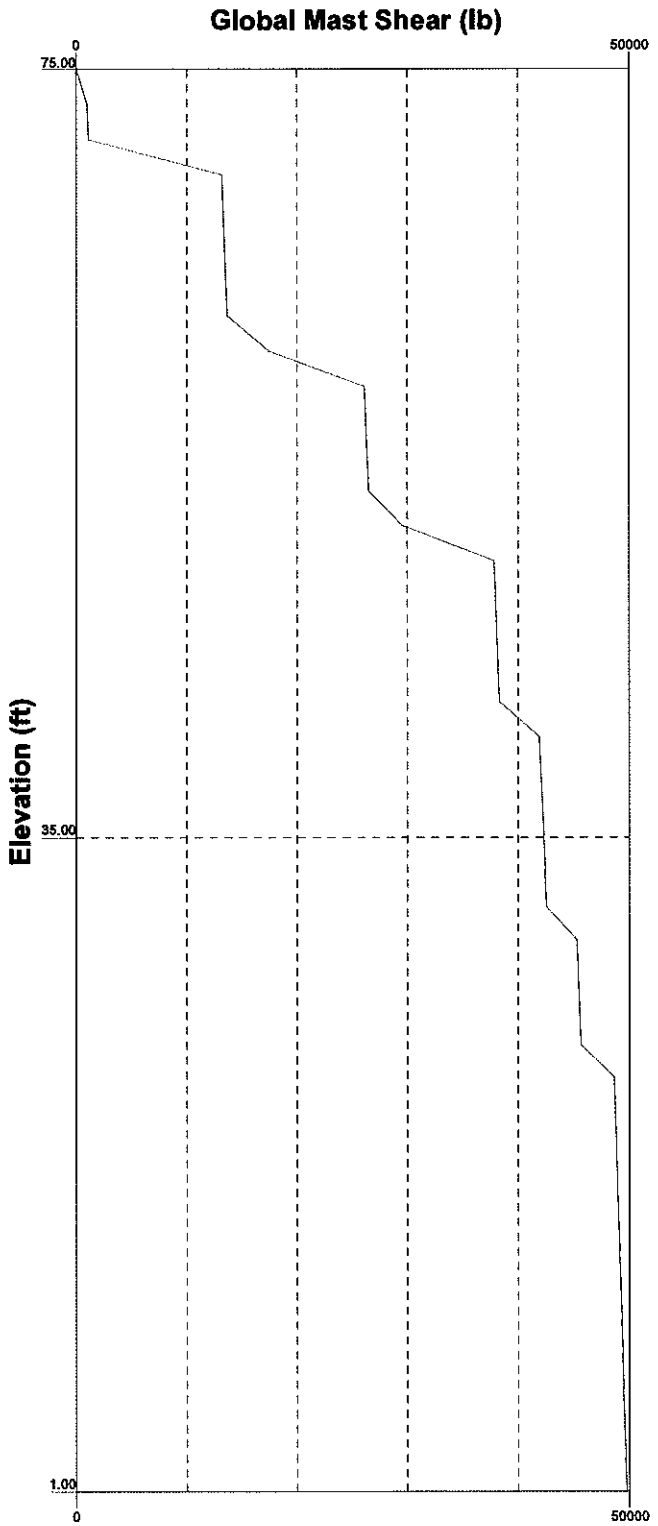

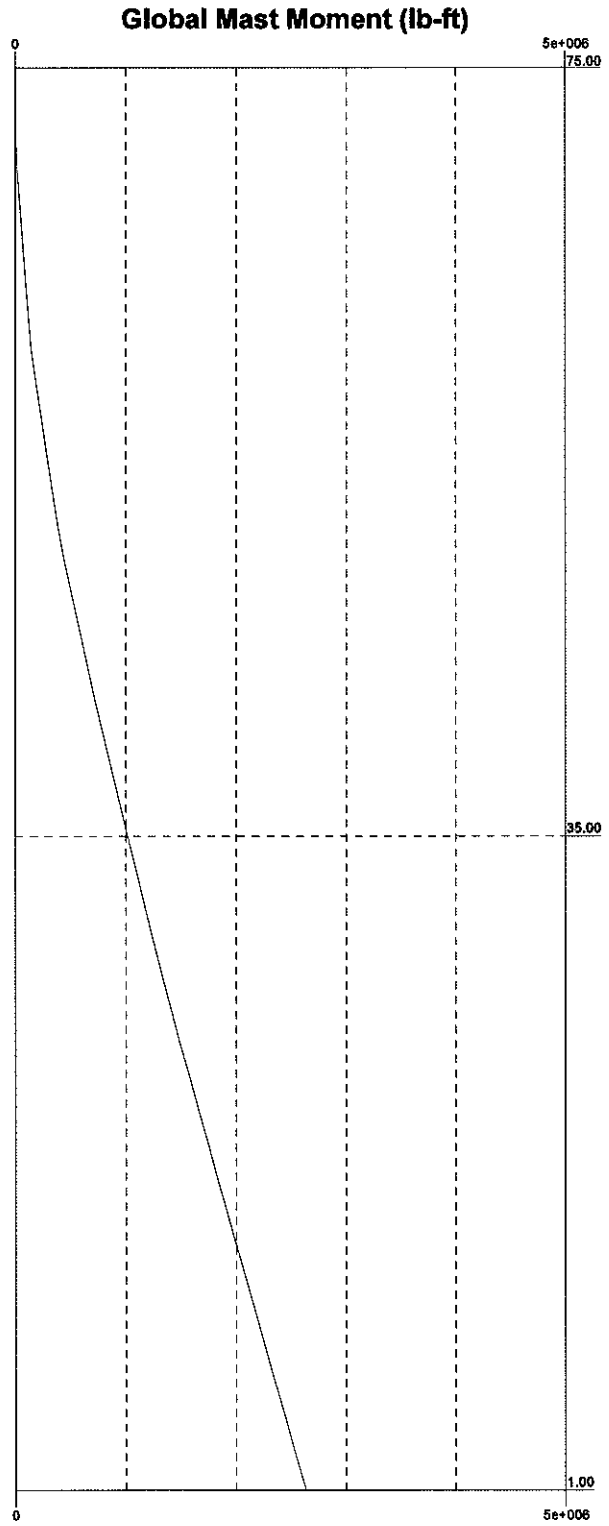

Vector Structural Engineers
1635 N. Greenfield Rd., Suite 112
Mesa, AZ 85205
Phone: (480) 648-3514
FAX: (801) 990-1776

Job: ***SJC Parking Lot***		
Project: ***A1212-0449-201***		
Client: Cell Trees, Inc.	Drawn by: ALL	App'd:
Code: TIA-222-G	Date: 06/30/20	Scale: NTS
Path:		Dwg No. E-4

TIA-222-G - Service - 60 mph

Maximum Values

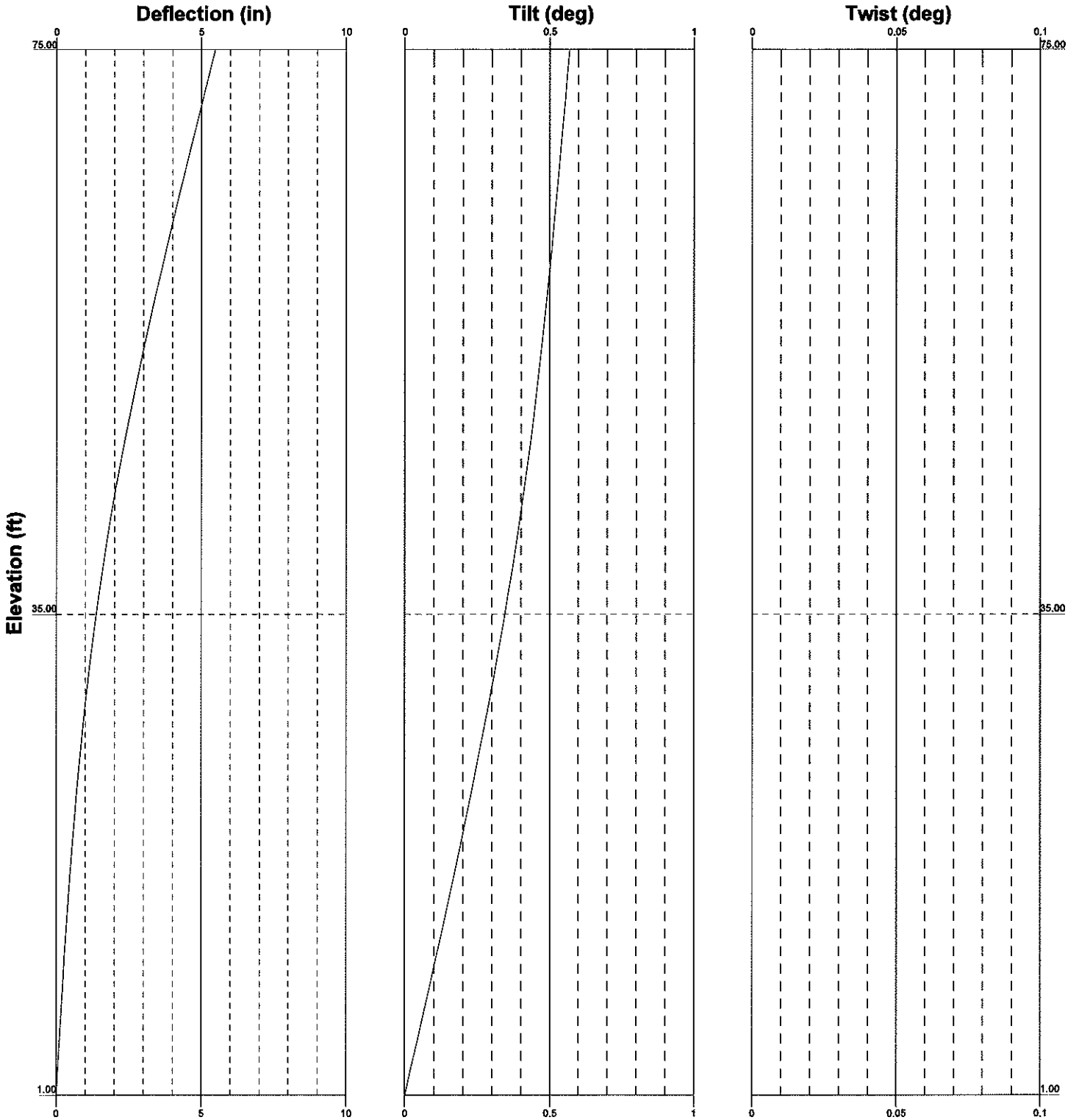

Vector Structural Engineers 1635 N. Greenfield Rd., Suite 112 Mesa, AZ 85205 Phone: (480) 648-3514 FAX: (801) 990-1776	Job: ***SJC Parking Lot***		
	Project: ***A1212-0449-201***		
	Client: Cell Trees, Inc.	Drawn by: ALL	App'd:
	Code: TIA-222-G	Date: 06/30/20	Scale: NTS
	Path:		Dwg No. E-5

JOB NO.: A1212-0449-201

VECTOR ENGINEERS

Copyright © 2020 Vector Structural Engineering of Arizona, LLP
This Excel workbook contains proprietary information belonging to Vector Structural Engineering of Arizona, LLP, and may be neither wholly nor partially copied or reproduced without the prior written permission of Vector Structural Engineering of Arizona, LLP.

PROJECT: SJC PARKING LOT

Seismic Base Shear Calculations:

Reactions From Wind:
V_u (kips): 49.8
Wt (kips): 29.3

Structure Height
75

Seismic Parameters:
Per International Building Code, 2015 Edition, ASCE 7-10

Risk Category / Structure Class=	II	F_a=	1.44
Seismic Design Category=	D	F_v=	2.27
I_S =	1.00	S_{MS}=	0.64
Site Class=	D	S_{M1}=	0.30
R=	1.50	S_{DS}=	0.43
S_s=	0.445	S_{D1}=	0.20
S_1=	0.133		

Seismic Base Shear:

$C_{S(MIN)} = 0.03$	0.03	
$C_{S(MIN)} = 0.8 \times S_1 / (R / I_S)$ =		(if S_1 >= 0.6)
$C_{S(MAX)} = S_{D1} / (T_a \times (R / I_S))$ =	0.15	
T =	0.92	s
$C_s = S_{DS} / (R / I_S)$ =	0.146	
$V = C_s \times W$ =	4.30	kips

Total Seismic Shear (V_u):	**4.3**	**Kips**
Total Wind Shear:	**49.8**	**Kips**

Earthquake Effects May Be Ignored

Stiffened or Unstiffened, Ungrouted, Circular Base Plate - Any Rod Material

TIA Rev G

Site Data

Project #: A1212-0449-201
Site Name: SJC Parking Lot

Pole Manufacturer:	*Other*

Anchor Rod Data		
Qty:	16	
Diam:	2.25	in
Rod Material:	A615-J	
Strength (Fu):	100	ksi
Yield (Fy):	75	ksi
Bolt Circle:	55.5	in

Plate Data		
Diam:	61.5	in
Thick:	2.5	in
Grade:	50	ksi
Single-Rod B-eff:	9.53	in

Stiffener Data (Welding at both sides)		
Config:	0	*
Weld Type:	Fillet	
Groove Depth:	0.25	<-- Disregard
Groove Angle:	45	<-- Disregard
Fillet H. Weld:	0.25	in
Fillet V. Weld:	0.3125	in
Width:	5	in
Height:	18	in
Thick:	0.75	in
Notch:	0.5	in
Grade:	36	ksi
Weld str.:	70	ksi

Pole Data		
Diam:	48.04	in
Thick:	0.375	in
Grade:	65	ksi
# of Sides:	18	"0" IF Round
Fu	80	ksi
Reinf. Fillet Weld	0.25	"0" if None

Reactions		
Mu:	2631	ft-kips
Axial, Pu:	35.2	kips
Shear, Vu:	49.8	kips

If No stiffeners, Criteria: AISC LRFD <-Only Applcable to Unstiffened Cases

Anchor Rod Results

		Rigid
Max Rod (Cu+ Vu/ŋ):	150.6 Kips	AISC LRFD
Allowable Axial, Φ*Fu*Anet:	260.0 Kips	φ*Tn
Anchor Rod Stress Ratio:	57.9% Pass	

Base Plate Results Flexural Check

		Rigid
Base Plate Stress:	22.4 ksi	AISC LRFD
Allowable Plate Stress:	45.0 ksi	φ*Fy
Base Plate Stress Ratio:	49.7% Pass	Y.L. Length: 27.79

n/a

Stiffener Results

Horizontal Weld :	n/a
Vertical Weld:	n/a
Plate Flex+Shear, fb/Fb+(fv/Fv)^2:	n/a
Plate Tension+Shear, ft/Ft+(fv/Fv)^2:	n/a
Plate Comp. (AISC Bracket):	n/a

Pole Results

Pole Punching Shear Check: n/a

Note: images below are for illustration only and may not reflect actual bolt quantity, etc.

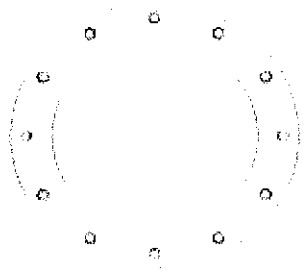

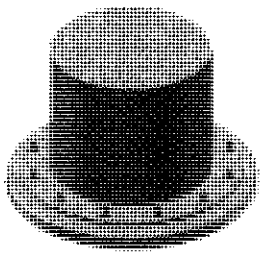

* 0 = none, 1 = every bolt, 2 = every 2 bolts, 3 = 2 per bolt

** Note: for complete joint penetration groove welds the groove depth must be exactly 1/2 the stiffener thickness for calculation purposes

JOB NO.: A1212-0449-201

Copyright © 2020 Vector Structural Engineering of Arizona, LLP

This Excel workbook contains proprietary information belonging to Vector Structural Engineering of Arizona, LLP, and may be neither wholly nor partially copied or reproduced without the prior written permission of Vector Structural Engineering of Arizona, LLP.

PROJECT: SJC PARKING LOT

Port Design:

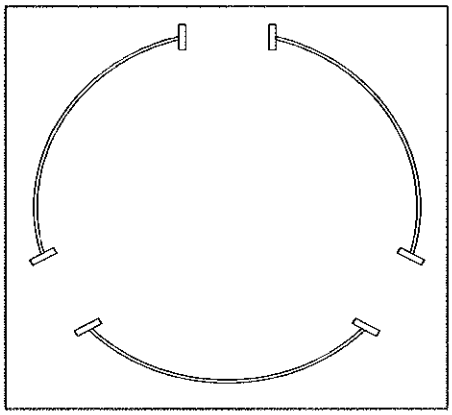

Label: Ports at 68 ft A.G.L.

Geometry Input

Pole Diameter	28.00	in
Pole Thickness	0.25	in
Pole Yield Strength	65	ksi
Effective Reinforcing Rims?	Yes	
Rim Yield Strength	65	ksi
# of Ports	3	

	Port 1	Port 2	Port 3
Azimuth (°)	0	120	240
Height (in)	19	19	19
Width (in)	7	7	7
Depth (in)	2	2	2
Thickness (in)	0.5	0.5	0.5
Projection (in)	0.5	0.5	0.5
Port Weight (lbs)	16		

Composite Section Properties

	Original	w/ ports	
A	22	22	in2
Ixx	2099	2163	in4
Iyy	2099	2163	in4
Smin	150	149	in3

Port Check

Pole unity at port location from tower model:	8%	(optional)
Rim Fy Reduction:	100%	
Result:	8%	

JOB NO.: A1212-0449-201

Copyright © 2020 Vector Structural Engineering of Arizona, LLP

This Excel workbook contains proprietary information belonging to Vector Structural Engineering of Arizona, LLP, and may be neither wholly nor partially copied or reproduced without the prior written permission of Vector Structural Engineering of Arizona, LLP.

PROJECT: SJC PARKING LOT

Port Design:

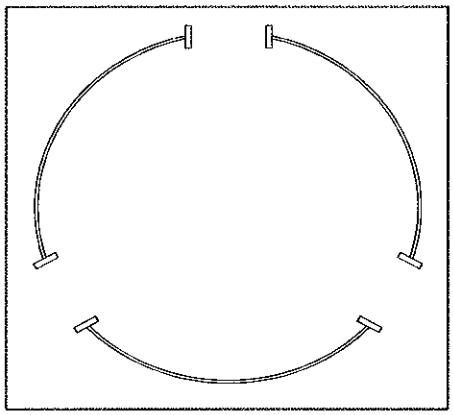

Label: Ports at 58 ft A.G.L.

Geometry Input

Pole Diameter	31.10	in
Pole Thickness	0.25	in
Pole Yield Strength	65	ksi
Effective Reinforcing Rims?	Yes	
Rim Yield Strength	65	ksi
# of Ports	3	

	Port 1	Port 2	Port 3
Azimuth (°)	0	120	240
Height (in)	19	19	19
Width (in)	7	7	7
Depth (in)	2	2	2
Thickness (in)	0.5	0.5	0.5
Projection (in)	0.5	0.5	0.5
Port Weight (lbs)	16		

Composite Section Properties

	Original	w/ ports	
A	24	25	in2
Ixx	2883	2959	in4
Iyy	2883	2959	in4
Smin	185	184	in3

Port Check

Pole unity at port location from tower model:	22%	(optional)
Rim Fy Reduction:	100%	
Result:	**23%**	

JOB NO.: A1212-0449-201

Copyright © 2020 Vector Structural Engineering of Arizona, LLP

This Excel workbook contains proprietary information belonging to Vector Structural Engineering of Arizona, LLP, and may be neither wholly nor partially copied or reproduced without the prior written permission of Vector Structural Engineering of Arizona, LLP.

PROJECT: SJC PARKING LOT

Port Design:

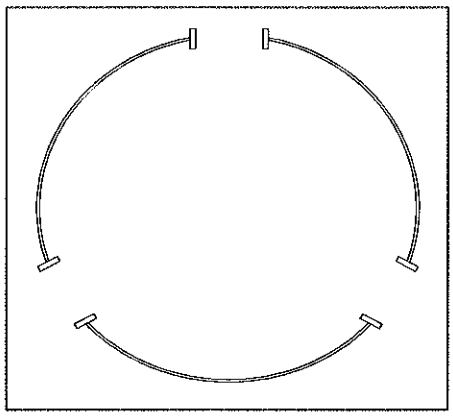

Label: Ports at 48 ft A.G.L.

Geometry Input

Pole Diameter	34.20	in
Pole Thickness	0.25	in
Pole Yield Strength	65	ksi
Effective Reinforcing Rims?	Yes	
Rim Yield Strength	65	ksi
# of Ports	3	

	Port 1	Port 2	Port 3
Azimuth (°)	0	120	240
Height (in)	19	19	19
Width (in)	7	7	7
Depth (in)	2	2	2
Thickness (in)	0.5	0.5	0.5
Projection (in)	0.5	0.5	0.5
Port Weight (lbs)	16		

Composite Section Properties

	Original	w/ ports	
A	27	27	in2
Ixx	3843	3932	in4
Iyy	3843	3932	in4
Smin	225	223	in3

Port Check

Pole unity at port location from tower model:	46%	(optional)
Rim Fy Reduction:	100%	
Result:	**46%**	

JOB NO.: A1212-0449-201

Copyright © 2020 Vector Structural Engineering of Arizona, LLP

This Excel workbook contains proprietary information belonging to Vector Structural Engineering of Arizona, LLP, and may be neither wholly nor partially copied or reproduced without the prior written permission of Vector Structural Engineering of Arizona, LLP.

PROJECT: SJC PARKING LOT

Port Design:

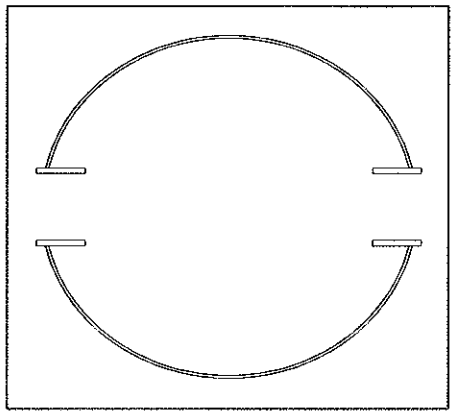

Label: Ports at 8 ft A.G.L.

Geometry Input

Pole Diameter	46.18	in
Pole Thickness	0.375	in
Pole Yield Strength	65	ksi
Effective Reinforcing Rims?	Yes	
Rim Yield Strength	65	ksi
# of Ports	2	

	Port 1	Port 2
Azimuth (°)	90	270
Height (in)	25.5	25.5
Width (in)	10.5	10.5
Depth (in)	6	6
Thickness (in)	0.75	0.75
Projection (in)	0.5	0.5
Port Weight (lbs)	126	

Composite Section Properties

	Original	w/ ports	
A	54	64	in2
Ixx	14153	14417	in4
Iyy	14153	17673	in4
Smin	613	611	in3

Port Check

Pole unity at port location from tower model:	66%	(optional)
Rim Fy Reduction:	100%	
Result:	66%	

JOB NO.: A1212-0449-201

Copyright © 2020 Vector Structural Engineering of Arizona, LLP

This Excel workbook contains proprietery information belonging to Vector Structural Engineering of Arizona, LLP, and may be neither wholly nor partially copied or reproduced without the prior written permission of Vector Structural Engineering of Arizona, LLP.

PROJECT: SJC PARKING LOT

Port Design:

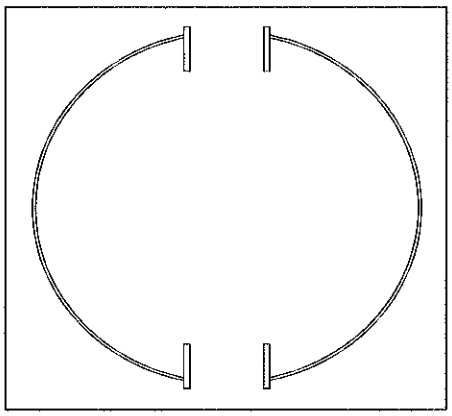

Label: Ports at 3 ft A.G.L.

Geometry Input

Pole Diameter	47.73	in
Pole Thickness	0.375	in
Pole Yield Strength	65	ksi
Effective Reinforcing Rims?	Yes	
Rim Yield Strength	65	ksi
# of Ports	2	

	Port 1	Port 2
Azimuth (°)	0	180
Height (in)	25.5	25.5
Width (in)	10.5	10.5
Depth (in)	6	6
Thickness (in)	0.75	0.75
Projection (in)	0.5	0.5
Port Weight (lbs)	126	

Composite Section Properties

	Original	w/ ports	
A	56	66	in2
Ixx	15639	19451	in4
Iyy	15639	15892	in4
Smin	655	652	in3

Port Check

Pole unity at port location from tower model:	69%	(optional)
Rim Fy Reduction:	100%	
Result:	**70%**	

ATC Hazards by Location

Search Information

Coordinates:	35.668532, -105.911806
Elevation:	7352 ft
Timestamp:	2020-05-04T20:52:23.958Z
Hazard Type:	Seismic
Reference Document:	IBC-2015
Risk Category:	II
Site Class:	D

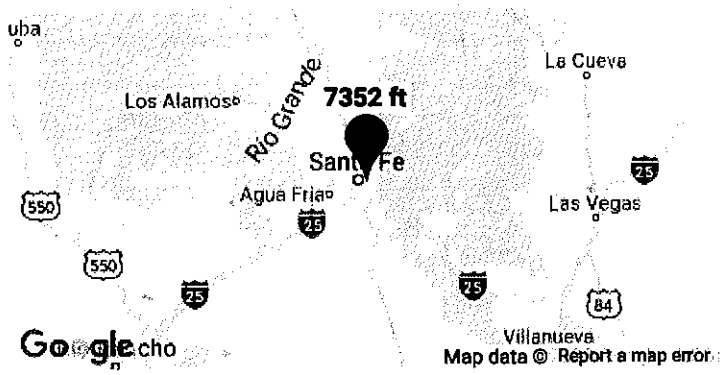

MCER Horizontal Response Spectrum

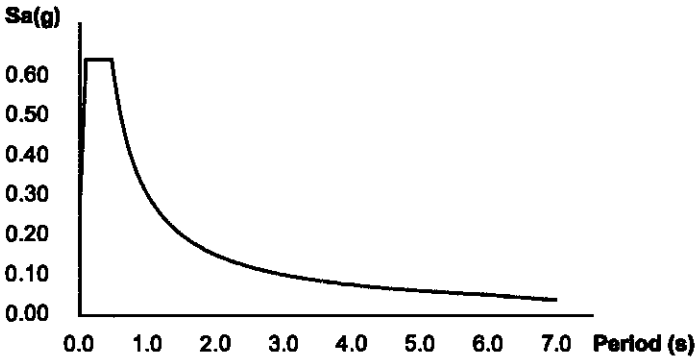

Design Horizontal Response Spectrum

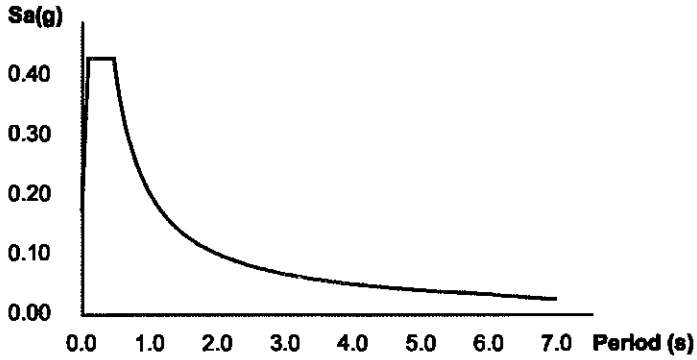

Basic Parameters

Name	Value	Description
S_S	0.445	MCE_R ground motion (period=0.2s)
S_1	0.133	MCE_R ground motion (period=1.0s)

June 23, 2020
HDRB Hearing

Gravity Pad Partners II, LLC.
PO Box 2755
Corrales, New Mexico 87048

RECEIVED
JUN - 1 2020
BY:

5/26/2020

City of Santa Fe
Historic Preservation Division
Historic District Review Board
P.O. Box 909
Santa Fe, NM 87501

Re HDRD/ Zoning Application for a Telecommunications Facility located at the St. John's College – 1160 Camino de Cruz Blanca, Santa Fe, NM 87505 – AT&T/FirstNet NML0255

Application Narrative Letter

Dear Mrs. Roach,

The following is a complete narrative letter that describes our proposed Monopine site with the St. John's College.

First, we met with the St. John's College executive board and went over the entire 250-acre campus for areas that would minimize the overall appearance of the site. We narrowed it down to 3 locations that spread across the campus. After that we met with the neighbors that land connects to the College and asked for their input. The location that was chosen by all parties is what we present to you here now. This location, next to the parking lot in next to the beginning of a walking trail currently has multiple trees as well as a 6 ft coyote fencing. Understanding that we can't complete camouflage the monopine, this location will blend in to the area as much as possible. The ground equipment will be behind a coyote fence that will completely hide it from view at ground level.

Second, the site was chosen using propagation maps/studies to determine the maximum amount of coverage for a large percentage of the campus as well as the surrounding roads and neighborhoods. The site will be able to communicate with the next closest site (S246) located at the St. John's Church.

Third, we looked for any existing structures that could be used. None of the rooftops/structures on campus were tall enough to meet the coverage objective as well as communicate with the next closest site.

Lastly, the proposed site will not only provide emergency services through the AT&T/FirstNet network for first responders but the tower will be able to accommodate all of the FCC wireless carriers for future use. That means we will only need one site for any future needs including 5G.

14-5.2 Historic Districts

On behalf of the St. John's College and AT&T/FirstNet, this letter is provided as part of the Historic Design Review Board 14-5.2 and Telecommunications Facilities 14-6.2E, submittal requirements for the above referenced property. The proposal is for approval of installation of a new 75 'Monopine, with antennas hidden by the foliage, which protects from public view coyote fencing to match the existing fence to screen the ground equipment as required by 14-5.2(I)(1)(e). The proposal is also for approval to construct an

equipment enclosure, at ground level 72" X 102". The alterations are proposed on the Non-Contributing dirt area next to the parking lot (no parking spaces in this area) at the North area lot

1160 Camino de Cruz Blanca known as the St. John's College, is located directly off of Camino de Cruz Blanca. The total acreage is 250.01 acres + (10,890,000 ± square feet). The property is within the 65 'of the Camino de Cruz Blanca road just off of the north parking lot area.

This proposal is request for approval of a 75 'monopine for the AT&T/FirstNet for E911 and emergency services for the first responders as well as ground equipment to be hidden behind a 6ft coyote fence similar to the fence that currently on the property. This monopine will also be capable of accommodating additional FCC wireless carriers in the future use.

The construction of the coyote screening wall to conceal the ground equipment in a residential area is required in the historic district and will match the existing coyote fencing running along the North property line along Camino de Cruz Blanca. This request for the coyote fence complies with all the criteria listed as follows:

(i) Do not damage the streetscape;
   a. The character of the streetscape is not compromised. The applicants' fence and ground equipment will not be visible from the street.

(ii) Prevent a hardship to the public welfare;
   a. The proposal will create a hardship for the public welfare. In fact public welfare will be increased as the addition of the wireless facility will increase cell phone users access to the E911 services and wireless communications in the surrounding neighborhoods as well as the St. John's campus.

(iii) Strengthen the unique heterogeneous character of the City by providing a full range of design options to ensure that residents reside within the Historic Districts:
   a. The proposed monopine would be next to and around other trees to assist with the stealth design. While the site will not be invisible it does blend in with the landscape.

(iv) Are due to special conditions and circumstances which are peculiar to the land or structures involves and which are not applicable to other lands or structures involved and which are not applicable to other lands or structures in the related streetscape;
   a. Due to the location of the site, well away from the main campus and tucked away between the walking trails and the North parking, this unique heterogeneous feature to blend in with the existing trees will assist with the site blending in to the landscape and to match the existing coyote fencing to hide the ground equipment which will not be seen from any streetscape.

(v) Are due to special conditions and circumstances which are not a result of the actions of the applicant;
   a. There is a demonstrated need for improved wireless services and most importantly emergency 911 for the entire campus as well as the neighboring public/private streets and homes around the St. John's College. Cell phone demand has increased exponentially, access to E911 is a major concern for the safety and welfare of Santa Fe residents. Due to the lack

of tall structures in the area of the St. John's College, AT&T/FirstNet Radio engineers have solved the "gap" with the proposal of the Monopine.

(vi) Provide the least negative impact with respect to the purpose of the section as set forth in 14-5.2(A)(1).

a. The request is in keeping with the general provisions and purpose of the section as set forth in 14-5.2(I)(1)(a&b), 14-5.2(I)(1(e), and Subsection 14-5.2(D).

14-6.2(E) **Telecommunication Facilities**

(4)(a) A tower or antenna that is not otherwise permitted or administratively approved shall be reviewed and approved by the planning commission for compliance with the section and all applicable city codes. In approving an application, the planning commission shall determine that:

(i) The application complies with this section;

(ii) The proposed telecommunications facilities are necessary to close a demonstrated significant gap in service coverage of the applicant based on actual signal strength data for the area where the gap is claimed and for the type of gap claimed;

The proposed site located at 1160 Camino de Cruz Blanca, Santa Fe, NM 87505 has been identified by AT&T Mobility and FirstNet for a coverage and capacity site. This location will off load traffic from the S246 St. John's Church located at 1200 Old Pecos trail. This site is exceeding the capacity and is 1.40 miles away so the coverage is extremely lacking. Currently, wireless users in the St. John's College area are experiencing slower speeds, difficulty accessing the E911 Services, high capacity internet resources and general poor call quality, which is even more prevalent as the demand grows in the City of Santa Fe for wireless services. The proposed site will greatly improve access to Emergency 911 services, the reliability of voice and data capacity to residents and visitors in the St. John's campus area and the neighborhood near and around the College including the Santa Fe Preparatory school. Our population is turning to more and more reliance of wireless devices and AT&T/FirstNet is committed to meet that demand. The capacity improvement is necessary to improve wireless users experience when it comes to data speeds, latency, and availability of the network. The St. John's college site, allows for improved E911 service in the area which means increased reliability of access to emergency service for the health and safety of the population of Santa Fe.

(iii) The applicant has demonstrated that no other less intrusive means or alternative to the proposed telecommunications facilities siting and design is practicable;

Since 2010, there has been several attempts to secure a cell site in this location to bridge the gap between the existing wireless facility at 1200 old Pecos Trail (S246) and the proposed site. AT&T Mobility has analyzed the feasibility of alternative site in the surrounding vicinity. It was determined that:

- **The lack of coverage in this area is caused by the distance of the next closest site (1.40 miles) as well as elevation change.**

- **Population Density – The addition of the new site will distribute cell phone user traffic more evenly. By successfully optimizing the distribution of cell phone user traffic, there will be less congestion, higher data speed, better quality voice and video calls.**

St. John's College NML0255 solves all of these issues in the St. John's College campus/neighborhood

Technical information supports the proposed height of the proposed antennas radius centers. The proposed site with antenna centerlines of 70 'will allow for better optimization of serving the radius, permitting radio engineers to increase or decrease the service area to absorb users from, or disperse users to, nearby sites. Those using E911 services and wireless customers will benefit from improved call quality and increase data throughout speeds.

Due to the small size of the search area (approximately 0.50 miles) AT&T/FirstNet is limited to alternative wireless facility options (see search area map). Potential medium height structures within the search ring was limited to considering the potential medium height structures within the search ring AT&T/FirstNet opted to work with the St. John's College for a Monopine structure in an area of the campus that currently is not being utilized. The College was extremely concern of the lack of emergency services for an active shooter situation.

Following is a list of the sites considered:

- 3 other locations on the St. John's College Campus.
- A monopine on the Southwest area behind the dorms. The neighbors next to the site preferred the location that it currently proposed
- The existing water tank up on the hill behind the College to the East. The elevation was 200 ft higher and was creating interference with the other existing sites
- The lower east end of the College didn't not work also because of the elevation and was causing interference with the other sites. Ultimately the College preferred it in the proposed location.
- The Santa Fe Preparatory school gym. In 2011 an attempt was researched to see if a roof mounted solution would work but because of the lower elevation of the school it was not able to cover over 70% of the St. John's campus.

14-6.2(E)(4)
(b) A tower or antenna that is located I a historic district and is not otherwise permitted or administratively approved shall be reviewed and approved by the historic districts review board in accordance with applicable requirements of Section 14-5.2 (Historic Districts) and in accordance with this Subsection 14-6.2(E) as follows. In approving an application, the historic districts review board shall determine that:

The wireless application for the 1160 Camino de Cruz Blanca, Santa Fe, NM 87505 meets the requirements of Section 14-5.2 (Historic Districts).

(i) The application complies with applicable requirements of Section 14-5.2 and this section; and
(ii) The applicant has demonstrated that no other less intrusive means or alternative to the proposed telecommunications facilities siting is practicable.

(c) The planning commission or the historic districts review board may not regulate the placement of telecommunications facilitates on the basis of the environmental effects of radio frequency emissions where such telecommunications facilities comply with 47 C.F.R. 1.1310 et seq.
(d) The planning commission or the historic districts review board may place conditions upon its approval of an application, but the conditions shall not prohibit or have the effect of prohibiting the provisions of telecommunications services.
(e) A denial of an application or an approval of an application with conditions not approved by the applicant shall:
(i) be in writing;
(ii) cite to the administrative record; and
(iii) shall not become final until the writing is approved by the planning omission or historic districts review board, as applicable, as its next regularly scheduled meeting.
(f) The planning commission and historic districts review board shall each review applications submitted under this section as soon as reasonably practicable without regard to the other's schedule or decision.

14-6.2(E)
(5) General Requirements

All towers and antennas, whether administratively approved or requiring planning commission or historic districts review board approval, shall comply with all applicable city codes and with the following:

(a) Zoning Districts; Locations

Telecommunications facilities are permitted in all zoning districts in accordance with the requirements of this section. However, to the maximum extent technically feasible, telecommunications facilities shall be sites:
(i) on existing structures: There were no existing structures that could accommodate the height needed to service the area.
(ii) in nonresidential districts; The applicant exhausted attempts to secure a location other than a nonresidential area but none exist in the area.
(iii) in C-2, I-1 and I-2 districts. The applicant exhausted attempts to secure a location other than a C-2, I-1 and I-2 districts area but none exist in the area.

(b) Maximum Height

Telecommunications height requirements in this section????

(c) Aesthetic Requirements

Subject to applicable federal standards and design ad safety codes, the following criteria must be met:

(i) Telecommunications facilities shall be installed underground to the maximum extent technically feasible;

The equipment used by AT&T/FirstNet is meant for outdoor use only. An underground vault would not allow adequate ventilation since the climate controls for the telco equipment work on ambient air. The ventilation would not allow removal of the built-up heat inside the underground vault, causing the equipment to overheat and fail. Additionally, due to Sant Fe's monsoon season and snow falls, flooding is a real possibility, which could endanger the workers 9cell technicians) and equipment, potentially causing electrical failure. Furthermore, underground equipment vaults must be large enough for two cell technicians, and be

ventilated and water tight. This would make the underground equipment vault larger than what is needed for the site. In this application AT&T/FirstNet and the property owner feel that a smaller, above ground equipment compound is safer, and least obtrusive solution.

(ii) If above ground, the telecommunications facilities shall be designed, installed and maintained in such a manner as to minimize the visual impact upon adjacent lands, public rights of way and residentially zoned property. Acceptable methods to minimize visual impact include concealment, screening, camouflaging, color, materials, texture, shape, size and location. Much consideration has been involved in the design of the equipment cabinet. We purposely went with a smaller, shorter cabinet and took the location of the trees and existing coyote fencing to place the equipment area away from the general public. By using the same coyote fencing both in height and design in an effort to match the existing area as to blend as much as possible. The placement of the equipment is installed as to minimize the impact to adjacent lands, public rights of way and residentially zoned property.

(iii) Consideration shall be given to minimize disruption to or alteration of the natural land forms and landscape;
Installation of the equipment cabinet will cause minimum disruption or alternation to the existing land as it will be located in an unused area east of existing parking spaces on the Northern portion of the campus.

(iv) Permanent lighting of telecommunications facilities shall not be allowed unless there is no alternative available to comply with federal law, in which case all proposed lighting shall be shown in the application. Permanent lighting hall not include equipment status indicator lights exceeding fifteen watts of power.
Proposed in the application and shown on the plans are small light fixtures to only be used by the technicians working within the equipment shelter in case of emergency at night. The proposed lights are to be installed lower that the height of the coyote fence of the equipment cabinet. The proposed lights are to be installed in a fashion that will only direct light into the equipment cabinet and not toward the sky or onto adjacent properties or streets. There will be no lights installed on the proposed Monopine.

(d) Archaeological Requirements

Compliance with Section 14-5.3 SFCC 1987 regarding the City's archaeological review districts is required.

This proposal is in compliance with Section 14-5.3, approximately 1,000 square feet of land will be disturbed. Any land disturbance above 2,500 square feet would require an archaeological clearance.

(e) Signs

Signs are not allowed unless required for safety reasons or otherwise in compliance with federal, state or local law, or unless permitted by the city.

Signs required for safety reasons or otherwise in compliance with federal, state or local law, or unless permitted by the city are the only signs that may possibly be required.

(f) Telecommunications facilities Maintenance

All telecommunications facilities shall be maintained so as to be safe, orderly, attractive and in conformity with all applicable federal, state and city laws, ordinances, regulation and codes. Weeds, trash and graffiti shall be promptly removed. All lockable telecommunications facilities shall be kept locked when not being actively serviced. All telecommunications facilities shall be kept free of graffiti.

This proposal will maintain compliance with Section 14-6.2E(5)(f) Telecommunications facilities Maintenance. AT&T/FirstNet equipment compound will be locked and monitored 24 hours a day, 7 days a week by the National Network Operation Center (NNOC). Any issues with either security or maintenance may be addressed by calling the NNOC.

(g) Noise

All telecommunications facilities shall be designed, constructed and installed in such a manner as to minimize noise to the maximum extent feasible, but in no event shall noise exceed the standards set forth in Article 10-2-SFCC 1987.

Chapter 10-2.5 Zone District Noise levels; maximum;

The wireless communications facility at 1160 Camino de Cruz Blanca will maintain and not exceed the maximum noise levels. The generator proposed will be at or lower than the 50 db.

(h) Restoration of Improvements

Promptly upon completion of a tower or antenna construction, all public and private property improvements, landscaping, fixtures, and facilities damaged in the course of construction or as otherwise agreed to by the applicant.

AT&T/FirstNet acknowledges and will comply with this request.

(i) Airport

Telecommunications facilities within the Class D airspace surrounding the Santa Fe airport shall be constructed in conformity with all applicable FAA regulations. A copy of any submittals required to be made to the FAA shall be provided to the city's airport manager at the time the submittal is made to the FAA. **Not applicable 1160 Camino de Cruz Blanca is not in Class D airspace. And the carrier will comply with all FAA regulations.**

(j) Co-location Requirement

A tower or tower alternative shall not be approved unless the applicant and the telecommunications owner agree to allow on a nondiscriminatory basis, to the maximum extent technically feasible, the co-location of other antennas on commercially reasonable terms on the approved tower or tower alternative.

The proposed 75' monopine is being structurally design to accommodate all wireless carriers and we will do everything possible to ensure collocation occurs.

(k) Tower setbacks and Separation Distances Between Towers

All towers shall be set back a distance equal to at least one hundred percent of the height of the tower from any adjoining lot line, measured from the base of the tower. A tower shall not be sited closer than one thousand (1,000) linear feet to another tower, measured from the base of the towers, unless co-location on the existing tower is not technically feasible or would have a significant adverse visual impact. (ord. NO. 2014-31 13)

The proposed monopine will have a 100% separation from any adjoining lot line, measured from the base of the monopine.

(l) Certification

On or before one year after the date of any final action approving an application and annually thereafter, the applicant shall provide to the land use director the certification or qualified independent parties that based on an inspection of the approved telecommunications facilities

their structural integrity remains intact and they remain in compliance with the radio frequency exposure limits set out in 47 C.F.R. 1.310 Table 1(A) and (B).

AT&T/FirstNet acknowledges and will comply with this request.

Acknowledgement

I acknowledge that the application and related submittal constitute a public record under the New Mexico inspection of Public Records Act and are required to be made available to members of the public for inspection upon request in accordance with City practice.

By: _____

Name: Kevin Winner

Title: Agent, Gravity Pad Partners II, LLC, on behalf of AT&T/FirstNet

STATE OF NEW MEXICO

COUNTY OF BERNALILLO

This instrument was acknowledged before me this 27 day of May, 2020, by Kevin Winner as the Agent of Gravity Pad Partners II, LLC, a New Mexico Limited Liability Company on behalf of said company.

Linda T. Anaya

Notary Public: Linda T. Anaya

My Commission Expires: 3-15-22

OFFICIAL SEAL
Linda T. Anaya
NOTARY PUBLIC
STATE OF NEW MEXICO
My Commission Expires: 3-15-22

RECEIVED
JUN - 1 2020
BY:_____

Gravity Pad Partners, LLC.
PO Box 2755
Corrales, New Mexico 87048

5/29/2020

City of Santa Fe
Historic Preservation Division
Historic District Review Board
P.O. Box 909
Santa Fe, NM 87501

Re Exception to the allowable height under SFCC Section 14-5.2. Telecommunications Facility located at the St. John's College – 1160 Camino de Cruz Blanca, Santa Fe, NM 87505 – AT&T/FirstNet NML0255

Exception Letter

Dear Mrs. Roach,

The following is a complete exception letter to the allowable height under SFCC Section 14-5.2.

First, we met with the St. John's College executive board and went over the entire 250-acre campus for areas that would minimize the overall appearance of the site. We narrowed it down to 3 locations that spread across the campus. After that we met with the neighbors that land connects to the College and asked for their input. The location that was chosen by all parties is what we present to you here now. This location, next to the parking lot in next to the beginning of a walking trail currently has multiple trees as well as a 6 ft coyote fencing. Understanding that we can't complete camouflage the monopine, this location will blend in to the area as much as possible. The ground equipment will be behind a coyote fence that will completely hide it from view at ground level.

Second, the site was chosen using propagation maps/studies to determine the maximum amount of coverage for a large percentage of the campus as well as the surrounding roads and neighborhoods. The site will be able to communicate with the next closest site (S246) located at the St. John's Church.

Third, we looked for any existing structures that could be used. None of the rooftops/structures on campus were tall enough to meet the coverage objective as well as communicate with the next closest site.

Lastly, the proposed site will not only provide emergency services through the AT&T/FirstNet network for first responders but the tower will be able to accommodate all of the FCC wireless carriers for future use. That means we will only need one site for any future needs including 5G.

May 29, 2020

14-5.2 Historic Districts

On behalf of the St. John's College and AT&T/FirstNet, this letter is provided as part of the Historic Design Review Board 14-5.2 and Telecommunications Facilities 14-6.2E, submittal requirements for the above referenced property. The proposal is for approval of installation of a new 75' Monopine, with antennas hidden by the foliage, which protects from public view coyote fencing to match the existing fence to screen the ground equipment as required by 14-5.2(I)(1)(e). The proposal is also for approval to construct an equipment enclosure, at ground level 72" X 102". The alterations are proposed on the Non-Contributing dirt area next to the parking lot (no parking spaces in this area) at the North area lot

1160 Camino de Cruz Blanca known as the St. John's College, is located directly off of Camino de Cruz Blanca. The total acreage is 250.01 acres + (10,890,000 ± square feet). The property is within the 65' of the Camino de Cruz Blanca road just off of the north parking lot area.

This proposal is request for approval of a 75' monopine for the AT&T/FirstNet for E911 and emergency services for the first responders as well as ground equipment to be hidden behind a 6ft coyote fence similar to the fence that currently on the property. This monopine will also be capable of accommodating additional FCC wireless carriers in the future use.

The construction of the coyote screening wall to conceal the ground equipment in a residential area is required in the historic district and will match the existing coyote fencing running along the North property line along Camino de Cruz Blanca. This request for the coyote fence complies with all the criteria listed as follows:

(i) Do not damage the streetscape;
   a. The character of the streetscape is not compromised. The applicants' fence and ground equipment will not be visible from the street.

(ii) Prevent a hardship to the public welfare;
   a. The proposal will create a hardship for the public welfare. In fact public welfare will be increased as the addition of the wireless facility will increase cell phone users access to the E911 services and wireless communications in the surrounding neighborhoods as well as the St. John's campus.

(iii) Strengthen the unique heterogeneous character of the City by providing a full range of design options to ensure that residents reside within the Historic Districts:
   a. The proposed monopine would be next to and around other trees to assist with the stealth design. While the site will not be invisible it does blend in with the landscape.

(iv) Are due to special conditions and circumstances which are peculiar to the land or structures involves and which are not applicable to other lands or structures involved and which are not applicable to other lands or structures in the related streetscape;
   a. Due to the location of the site, well away from the main campus and tucked away between the walking trails and the North parking, this unique heterogeneous feature to blend in with the existing trees will assist with the site blending in to the landscape and to match the existing coyote fencing to hide the ground equipment which will not be seen from any streetscape.

Gravity Pad Towers, LLC
PO Box 2755
towers@gravitypad.com

(v) Are due to special conditions and circumstances which are not a result of the actions of the applicant;

a. There is a demonstrated need for improved wireless services and most importantly emergency 911 for the entire campus as well as the neighboring public/private streets and homes around the St. John's College. Cell phone demand has increased exponentially, access to E911 is a major concern for the safety and welfare of Santa Fe residents. Due to the lack of tall structures in the area of the St. John's College, AT&T/FirstNet Radio engineers have solved the "gap" with the proposal of the Monopine.

(vi) Provide the least negative impact with respect to the purpose of the section as set forth in 14-5.2(A)(1).

a. The request is in keeping with the general provisions and purpose of the section as set forth in 14-5.2(I)(1)(a&b), 14-5.2(I)(1(e), and Subsection 14-5.2(D).

Thank you,

Sean Milks

Sean Milks

PROJECT DESCRIPTION

SHEET INDEX		
SHEET #	DESCRIPTION	REV #
T-1	SITE LOCATION	A
V-1	V-1 EXISTING	A
V-2	V-1 PROPOSED	A
V-3	V-2 EXISTING	A
V-4	V-2 PROPOSED	A
V-5	V-3 EXISTING	A
V-6	V-3 PROPOSED	A

AT&T

SITE ID:
NML00255
SITE NAME:
SJC PARKING LOT

DISCLAIMER:

THIS PHOTOSIMULATION IS INTENDED AS A GRAPHICAL REPRESENTATION OF EXISTING AND PROPOSED SITE CONDITIONS BASED ON THE PROJECT/DRAWING PLANS. IT IS NOT INTENDED FOR CONSTRUCTION, ACTUAL, FINAL CONSTRUCTION MAY VARY.

1 SITE LOCATION
SCALE (11" X 17"): 1/32" = 1'-0"

0 16'-0" 32'-0" 64'-0" 96'-0"

AT&T
1355 WEST UNIVERSITY DRIVE
MESA, AZ 85201

md7
10590 WEST OCEAN AIR DRIVE SUITE 300
SAN DIEGO, CA 92130

Trylon
1825 W. WALNUT HILL LANE, SUITE 120
IRVING, TEXAS 75038
1-855-669-5421

SUBMITTALS			
REV	DATE	DESCRIPTION	BY
A	11.20.19	ISSUED FOR REVIEW	SUD

PROJECT INFORMATION
SITE ID NML00255
SITE NAME SJC PARKING LOT
LATITUDE 35.6685320°
LONGITUDE -105.9118060°
SITE ADDRESS 1160 CAMINO DE CRUZ BLANCA SANTA FE, NM 87505

SHEET DESCRIPTION
SITE LOCATION

SHEET NO.
T-1

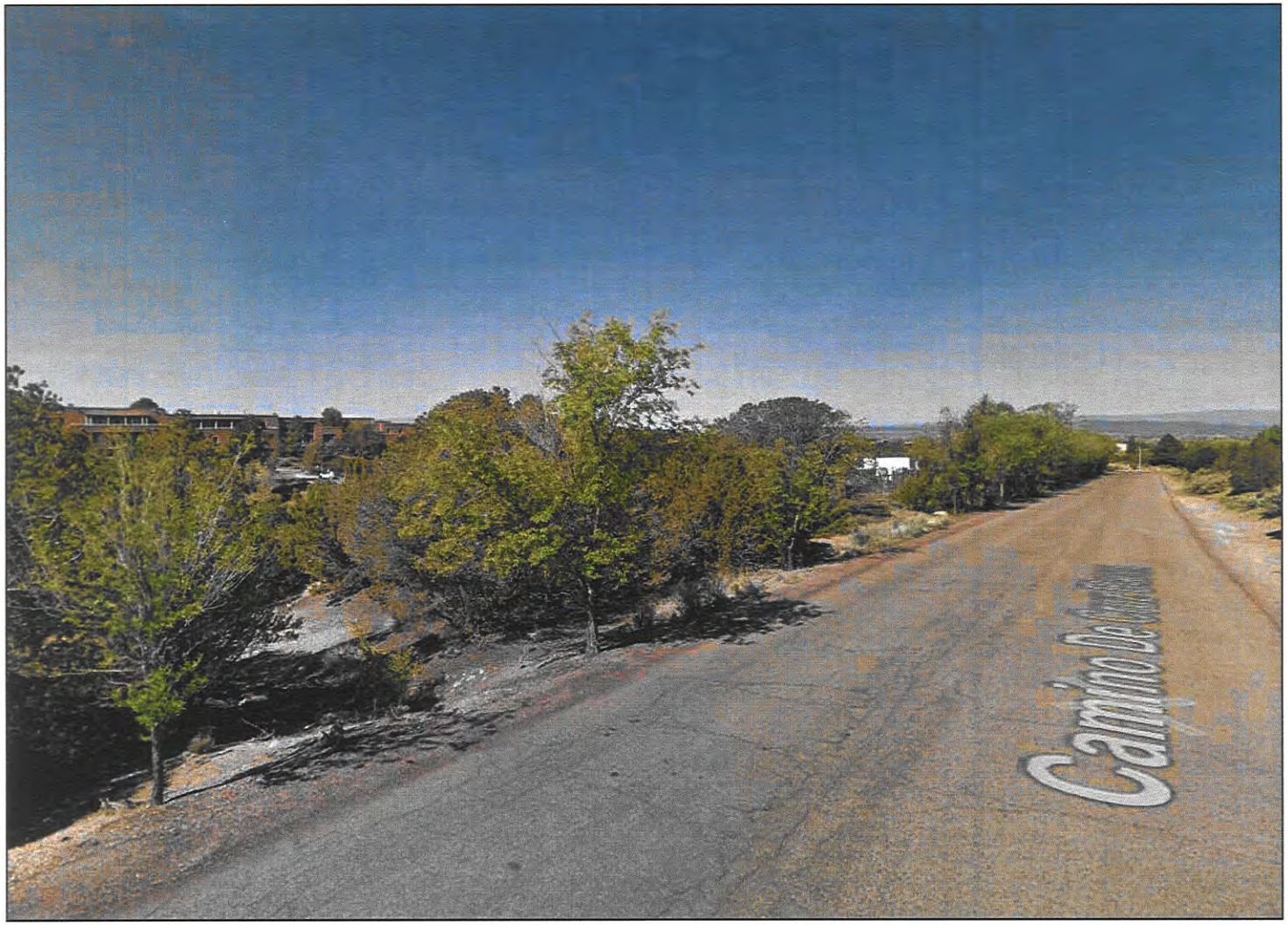

VIEW 1–EXISTING
NTS

AT&T
1355 WEST UNIVERSITY DRIVE
MESA, AZ 85201

md7
10590 WEST OCEAN AIR DRIVE SUITE 300
SAN DIEGO, CA 92130

Trylon
1825 W. WALNUT HILL LANE, SUITE 120
IRVING, TEXAS 75038
1–855–669–5421

SUBMITTALS

REV	DATE	DESCRIPTION	BY
A	11.20.19	ISSUED FOR REVIEW	SUD

PROJECT INFORMATION

SITE ID
NML00255

SITE NAME
SJC PARKING LOT

LATITUDE
35.6685320°

LONGITUDE
−105.9118060°

SITE ADDRESS
1160 CAMINO DE CRUZ BLANCA
SANTA FE, NM 87505

SHEET DESCRIPTION

V1–EXISTING

SHEET NO.

V–1

VIEW 1-PROPOSED
NTS

AT&T
1355 WEST UNIVERSITY DRIVE
MESA, AZ 85201

md7
10590 WEST OCEAN AIR DRIVE SUITE 300
SAN DIEGO, CA 92130

Trylon
1825 W. WALNUT HILL LANE, SUITE 120
IRVING, TEXAS 75038
1-855-669-5421

SUBMITTALS

REV	DATE	DESCRIPTION	BY
A	11.20.19	ISSUED FOR REVIEW	SUD

PROJECT INFORMATION

SITE ID
NML00255

SITE NAME
SJC PARKING LOT

LATITUDE
35.6685320°

LONGITUDE
-105.9118060°

SITE ADDRESS
1160 CAMINO DE CRUZ BLANCA
SANTA FE, NM 87505

SHEET DESCRIPTION

V1-PROPOSED

SHEET NO.

V-2

VIEW 2–EXISTING
NTS

AT&T
1355 WEST UNIVERSITY DRIVE
MESA, AZ 85201

md7
10590 WEST OCEAN AIR DRIVE SUITE 300
SAN DIEGO, CA 92130

Trylon
1825 W. WALNUT HILL LANE, SUITE 120
IRVING, TEXAS 75038
1–855–669–5421

SUBMITTALS

REV	DATE	DESCRIPTION	BY
A	11.20.19	ISSUED FOR REVIEW	SUD

PROJECT INFORMATION

SITE ID
NML00255

SITE NAME
SJC PARKING LOT

LATITUDE
35.6685320°

LONGITUDE
–105.9118060°

SITE ADDRESS
1160 CAMINO DE CRUZ BLANCA
SANTA FE, NM 87505

SHEET DESCRIPTION

V2–EXISTING

SHEET NO.

V–3

VIEW 2-PROPOSED
NTS

AT&T
1355 WEST UNIVERSITY DRIVE
MESA, AZ 85201

md7
10590 WEST OCEAN AIR DRIVE SUITE 300
SAN DIEGO, CA 92130

Trylon
1825 W. WALNUT HILL LANE, SUITE 120
IRVING, TEXAS 75038
1-855-669-5421

SUBMITTALS

REV	DATE	DESCRIPTION	BY
A	11.20.19	ISSUED FOR REVIEW	SUD

PROJECT INFORMATION

SITE ID
NML00255

SITE NAME
SJC PARKING LOT

LATITUDE
35.6685320°

LONGITUDE
-105.9118060°

SITE ADDRESS
1160 CAMINO DE CRUZ BLANCA
SANTA FE, NM 87505

SHEET DESCRIPTION

V2-PROPOSED

SHEET NO.

V-4

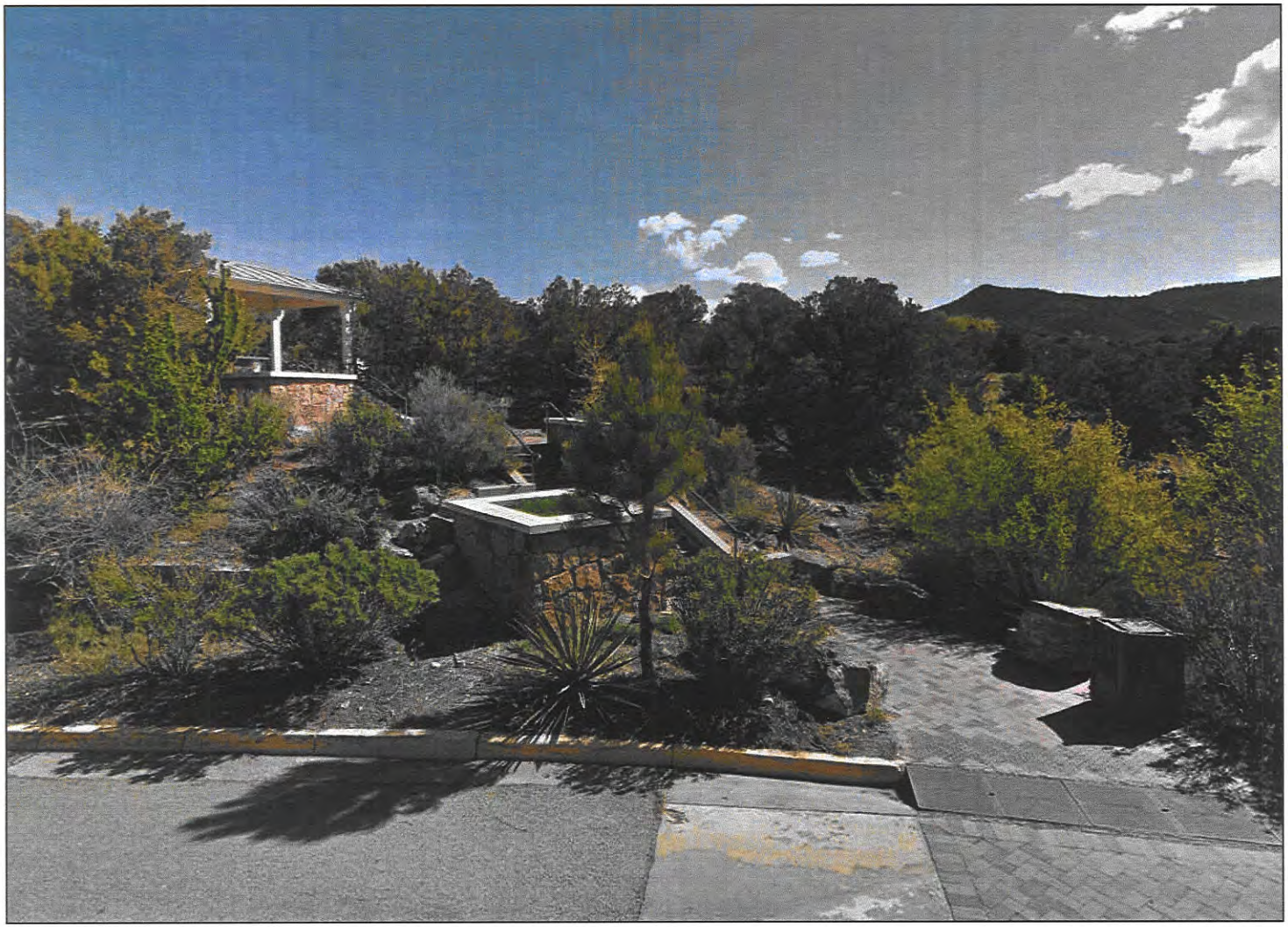

VIEW 3–EXISTING
NTS

AT&T
1355 WEST UNIVERSITY DRIVE
MESA, AZ 85201

md7
10590 WEST OCEAN AIR DRIVE SUITE 300
SAN DIEGO, CA 92130

Trylon
1825 W. WALNUT HILL LANE, SUITE 120
IRVING, TEXAS 75038
1–855–669–5421

SUBMITTALS

REV	DATE	DESCRIPTION	BY
A	11.20.19	ISSUED FOR REVIEW	SUD

PROJECT INFORMATION

SITE ID
NML00255

SITE NAME
SJC PARKING LOT

LATITUDE
35.6685320°

LONGITUDE
–105.9118060°

SITE ADDRESS
1160 CAMINO DE CRUZ BLANCA
SANTA FE, NM 87505

SHEET DESCRIPTION

V3–EXISTING

SHEET NO.

V–5

VIEW 3–PROPOSED
NTS

AT&T
1355 WEST UNIVERSITY DRIVE
MESA, AZ 85201

md7
10590 WEST OCEAN AIR DRIVE SUITE 300
SAN DIEGO, CA 92130

Trylon
1825 W. WALNUT HILL LANE, SUITE 120
IRVING, TEXAS 75038
1–855–669–5421

SUBMITTALS

REV	DATE	DESCRIPTION	BY
A	11.20.19	ISSUED FOR REVIEW	SUD

PROJECT INFORMATION

SITE ID
NML00255

SITE NAME
SJC PARKING LOT

LATITUDE
35.6685320°

LONGITUDE
–105.9118060°

SITE ADDRESS
1160 CAMINO DE CRUZ BLANCA
SANTA FE, NM 87505

SHEET DESCRIPTION

V3–PROPOSED

SHEET NO.

V–6