CONSTRUCTION PLANS FOR

SANTA FE RIVER TRAIL

CONNECTIONS AND IMPROVEMENTS, PHASE 1

CAMINO DE CHELLY / AGUA FRIA TO CAMINO DEL CAMPO

CN: S100280

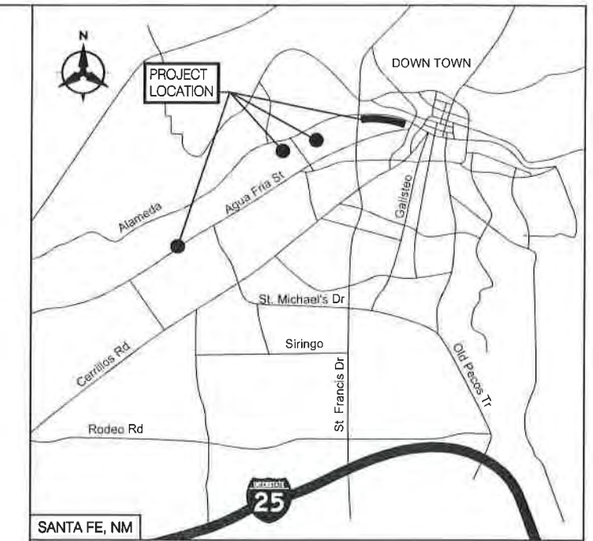

VICINITY MAP
NOT TO SCALE

NMDOT

CITY OF SANTA FE, NEW MEXICO

DECEMBER, 2014

Approved by City of Santa Fe

Public Works Department Director — Date: 5-2-15

Approved by City of Santa Fe

Roadway & Trails Engineering Division Director — Date: 5-1-15

Reviewed by City of Santa Fe

ADA Coordinator — Date: 4/23/15

Reviewed by City of Santa Fe

Historic Preservation Division — Date: 4.28.15

UTILITY COMPANY CONTACTS

COMPANY	CONTACT	ADDRESS	PHONE	E MAIL
Century Link	Gilbert Barela	2701 Sawmill Rd. SFNM 87505	505.473.1984	Gilbert.Barela@CenturyLink.com
Comcast Cable	David Aikin	2534 Camino Entrada, SFNM 87505	505.780.1348	David_Aikin@cable.comcast.com
City Of Santa Fe Sewer	Stan Holland	PO Box 909, SFNM 87504	505.955.4637	tsholland@santafenm.gov
City Of Santa Fe Water	Alex Puglisi	PO Box 909, SFNM 87504	505.955.4232	aapuglisi@santafenm.gov
NM Gas	La Vanda Jones	6 Forest Lane	505.239.5687	lavanda.jones@nmgco.com
PNM Electric	Tom Dominguez	4565 NM 14, SFNM 87507	505.473.3209	tom.dominguez@pnm.com

JEANETTE A. WALTERS — NEW MEXICO — 11243 — REGISTERED PROFESSIONAL ENGINEER — 2/10/15

No.	Date	REVISIONS	By

Designed By: JAW DATE: 11/2014
Drawn By: LAH DATE: 11/2014
Checked By: JAW DATE: 11/2014

Bohannan Huston
www.bhinc.com 800 877.5332

CITY OF SANTA FE
SANTA FE RIVER TRAIL
CONNECTIONS AND IMPROVEMENTS, PHASE 1
CAMINO DE CHELLY / AGUA FRIA TO CAMINO DEL CAMPO

COVER SHEET

CN: S100280 — Sheet 1-1

P:\20140268\TRANS\Design\Plan Production\Plans\20140268-Cover dwg
Mon, 16-Feb-2015 - 10:13:am, Plotted by: LAHINDE

INDEX OF SHEETS - SANTA FE RIVER TRAIL - CONNECTIONS & IMPROVEMENTS PHASE 1
CAMINO DE CHELLY / AGUA FRIA TO CAMINO DEL CAMPO

SHEET NO.	DESCRIPTION		REVISION DATE	DWG NO	AGENCY
1-1	COVER SHEET				
1-2	INDEX OF SHEETS				
1-3	SUMMARY OF QUANTITIES				
1-4 TO 1-5	GENERAL NOTES				
1-6	ENVIRONMENTAL REQUIREMENTS				
	SUBTOTAL =	6			
2-1	TYPICAL SECTIONS				
2-2 TO 2-3	MISCELLANEOUS QUANTITIES				
2-4 TO 2-5	MISCELLANEOUS DETAILS				
2-6	MISCELLANEOUS DETAILS				
	SUBTOTAL =	6			
3-1	FRENCHY'S PARK PLAN SHEET				
3-2	CONQUISTADORA PLAN & PROFILE SHEET				
3-3	ALTO PARK PLAN & PROFILE SHEET				
3-4 TO 3-7	WEST ALAMEDA PLAN & PROFILE SHEETS				
	SUBTOTAL =	7			
6-1	TRAFFIC CONTROL PLAN				
	SUBTOTAL =	1			
7-1 TO 7-3	PERMANENT SIGNING & STRIPING PLANS				
	SUBTOTAL =	3			
8-1 TO 8-2	LIGHTING CONDUIT PLANS				
	SUBTOTAL =	2			
10-1	STRUCTURE PLACEMENT				
	SUBTOTAL =	1			
12-1	FILL HEIGHT AND BEDDING DETAILS FOR CIRCULAR PONCRETE PIPE CULVERTS		4/10/2012	206-01-1/1	NMDOT
12-2	MAXIMUM AND MINIMUM COVER STEEL-ROUND PIPES HELICAL CORRUGATED METAL AND STRUCTUREAL PLATES		4/10/2012	206-03-1/1	NMDOT
12-3	MAXIMUM AND MINIMUM COVER ALUMINUM ROUND HELICAL CORRUGATED METAL AND STRUCTUREAL PLATES		4/10/2012	206-05-1/1	NMDOT
12-4	CORRUGATED METAL CULVERT AND PIPE ARCHES BEDDING AND BACKFILL DETAILS		8/29/2008	206-07-1/1	NMDOT
12-5	FILL HEIGHTS FOR PLASTIC CULVERT PIPE EXCAVATION DETAIL		3/16/2011	206-10-1/1	NMDOT
12-6	PEDESTRIAN RAILING WITHOUT HANDRAIL		1/10/2013	607-20-1/4	NMDOT
12-7	PEDESTRIAN RAILING WITH HANDRAIL		1/10/2013	607-20-2/4	NMDOT
12-8	PEDESTRIAN RAILING FOUNDATION DETAILS		1/10/2013	607-20-3/4	NMDOT
12-9	SIDEWALK CURB AND GUTTER		11/16/2009	609-01-1/1	NMDOT
12-10	MEDIAN DROP INLET JUNCTION BOX, GRATES, NOTES, AND QUANTITIES		11/10/2009	623-01-1/1	NMDOT
12-11	DROP INLET FOR TYPE "B" CURB		1/10/2013	623-14-1/3	NMDOT
12-12	DROP INLET FOR TYPE "B" CURBS GRATES, FRAMES, NOSE PLATES AND CENTER SUPPORT BEAMS		1/10/2013	623-14-2/3	NMDOT
12-13	DROP INLET FOR TYPE "B" CURBS GRATES, FRAMES, NOSE PLATES AND CENTER SUPPORT BEAMS		1/10/2013	623-14-3/3	NMDOT
12-14	PULL BOX DETAILS		12/22/2004	710S-01-1/1	NMDOT
12-15	DRAINAGE STATIONARY & REMOVABLE POST DETAILS		Feb-06	DWG 2250	NM APWA
12-16	CURB AND GUTTER & TEMPORARY PAVING SECTION		Feb-06	DWG 2415B	NM APWA
12-17	TEMPORARY TRAFFIC CONTROL GENERAL NOTES		Feb-06	DWG 2801	NM APWA
12-18	TEMPORARY TRAFFIC CONTROL TRAFFIC CONTROL SIGNING		Feb-06	DWG 2802	NM APWA
12-19	TEMPORARY TRAFFIC CONTROL CONSTRUCTION TRAFFIC CONTROL STANDARDS		Feb-06	DWG 2803	NM APWA
	SUBTOTAL =	19			
13-1 TO 13-21	CROSS-SECTIONS				
	SUBTOTAL =	21			
	SHEET TOTAL =	66			

JEANETTE A. WALTHER
NEW MEXICO
11243
REGISTERED PROFESSIONAL ENGINEER
10/21/14

No.	Date	REVISIONS	By

Designed By: JAW DATE: 07/2014
Drawn By: LAH DATE: 07/2014
Checked By: JAW DATE: 07/2014

Bohannan Huston
www.bhinc.com 800.877.5332

CITY OF SANTA FE
SANTA FE RIVER TRAIL
CONNECTIONS AND IMPROVEMENTS, PHASE 1
CAMINO DE CHELLY / AGUA FRIA TO CAMINO DEL CAMPO

INDEX OF SHEETS

CN: S100280

Sheet 1-2

P:\20140268\TRANS\Design\Plan Production\Plans\20140268-Index.dwg
Thu, 13-Nov-2014 -- 12:55:pm, Plotted by: LAHINDE

SUMMARY OF QUANTITIES

ITEM SPECIFICATIONS			TOTAL	
NUMBER	DESCRIPTION	UNIT	ESTIMATE	FINAL
201000	CLEARING AND GRUBBING	LS	LS	
203000	UNCLASSIFIED EXCAVATION	CY	180	
203100	BORROW	CY	510	
416000	MINOR PAVEMENT	SY	8	
543100	METAL RAILING, PEDESTRIAN	LF	405	
543200	METAL RAILING, BICYCLE	LF	260	
570024	24" STORM DRAIN CULVERT PIPE	LF	15	
601000	REMOVAL OF STRUCTURES AND OBSTRUCTIONS	LS	LS	
601110	REMOVAL OF SURFACING	SY	140	
603100	TEMPORARY SOIL STABILANT	AC	0.150	
603261	COMPOSTED MULCH SOCKS	LF	380	
608004	CONCRETE SIDEWALK 4"	SY	3265	
609200	HEADER CURB	LF	235	
609418	CONCRETE VERTICAL CURB AND GUTTER TYPE B 6" X 18"	LF	310	
609424	CONCRETE VERTICAL CURB AND GUTTER TYPE B 6" X 24"	LF	214	
618000	TRAFFIC CONTROL MANAGEMENT	LS	LS	
621000	MOBILIZATION	LS	LS	
623311	CDI TYPE I-B, TO 4'	EA	1	
623600	JUNCTION BOX	EA	1	
632000	CLASS A SEEDING	AC	0.130	
667309	RECYCLED CONCRETE WALL	SF	590	
667500	BOLLARD	EA	1	
667319	CEDAR RAIL FENCE	LF	100	
667507	AMENDED SOIL	CY	32	
701000	PANEL SIGNS	SF	95	
701030	REMOVE AND RESET PANEL SIGN	EA	1	
701100	STEEL POST AND BASE POST FOR ALUMINUM PANEL SIGNS	LF	275	
702610	PORTABLE CHANGEABLE MESSAGE SIGN	EA	2	
702810	TRAFFIC CONTROL DEVICES FOR CONSTRUCTION	LS	LS	
704814	TYPE I RETROREFLECTIVE PREFORMED PAVEMENT STRIPE 24"	LF	326	
709020	RIGID ELECTRICAL CONDUIT 2" (DIA.)	LF	1980	
710000	ELECTRICAL PULL BOX (STANDARD)	EA	12	
801000	CONSTRUCTION STAKING BY THE CONTRACTOR	LS	LS	
802000	POST CONSTRUCTION PLANS	LS	LS	
801000	CONTRACTOR PROCESS QUALITY CONTROL	LS	LS	

JEANETTE A. WALTHER
NEW MEXICO
11243
REGISTERED PROFESSIONAL ENGINEER
2/9/15

No.	Date	REVISIONS	By

Designed By: JAW DATE: 11/2014
Drawn By: LAH DATE: 11/2014
Checked By: JAW DATE: 11/2014

Bohannan Huston
www.bhinc.com 800.877.6332

CITY OF SANTA FE
SANTA FE RIVER TRAIL
CONNECTIONS AND IMPROVEMENTS, PHASE 1
CAMINO DE CHELLY / AGUA FRIA TO CAMINO DEL CARPO

SUMMARY OF QUANTITIES

CN: 5100280

Sheet 1-3

P:\20140268\TRANS\Design\Plan Production\Plans\20140268-SumQuan3-2-15.dwg
Mon, 2-Feb-2015 - 9:14am, Plotted by: LAHHBC

GENERAL NOTES:

1. PROTECTION OF SURVEY MONUMENTS : THE CONTRACTOR SHALL TAKE PRECAUTIONS TO PROTECT HORIZONTAL AND VERTICAL CONTROL SURVEY MONUMENTS (MARKS) FROM DAMAGE PRIOR TO INITIATING CONSTRUCTION. IF DURING THE COURSE OF CONSTRUCTION OPERATIONS THE CONTRACTOR DISTURBS OR DESTROYS A MARK, THE CONTRACTOR SHALL ESTABLISH A NEW MARK IN COMPLIANCE WITH THE STANDARDS AND PROCEDURES SET FORTH IN THE "GEODETIC MARK PRESERVATION GUIDEBOOK". NATIONAL GEODETIC SURVEY, MARCH 1990, AT CONTRACTORS EXPENSE. CONTACT: NGS MARK, PRESERVATION CENTER - NOAA, TELEPHONE (505) 768 3606. THIS WORK IS INCLUDED IN ITEM 801000 - CONSTRUCTION STAKING.

2. REMOVALS: THE CONTRACTOR SHALL BE RESPONSIBLE FOR ALL REMOVALS REQUIRED TO COMPLETE THIS PROJECT. IF ADDITIONAL REMOVALS NOT LISTED IN PLANS ARE NECESSARY TO COMPLETE THIS PROJECT THE WORK AND COSTS ASSOCIATED WILL BE CONSIDERED AS INCLUDED IN THE CONTRACT PRICE FOR ITEM 601000 - REMOVAL OF STRUCTURES AND OBSTRUCTIONS AND NO SEPARATE MEASUREMENT OR PAYMENT WILL BE MADE THEREFOR.

3. MAINTENANCE OF AS-BUILT PLANS: THE CONTRACTOR WILL BE RESPONSIBLE FOR MAINTAINING A CURRENT SET OF AS-BUILT PLANS FOR THE PROJECT. THE CONTRACTOR MUST PROVIDE THE CITY WITH VERTICAL AND HORIZONTAL SURVEY DATA FOR ANY AND ALL FIELD CHANGES TO ALIGNMENT AND ELEVATIONS. DATA SHALL BE PROVIDED WITHIN TWO (2) DAYS OF THE PROJECT MANAGER'S REQUEST. ALL DATA MUST BE PROVIDED PRIOR TO FINAL PAYMENT. SUBMITTAL OF THIS DATA SHALL BE CONSIDERED INCIDENTAL TO ITEM 801000 - CONSTRUCTION STAKING BY THE CONTRACTOR AND NO SEPARATE MEASUREMENT OR PAYMENT WILL BE MADE THEREFOR.

4. PUBLIC NOTIFICATIONS OF ROAD AND LANE CLOSURES: THE CONTRACTOR SHALL KEEP THE CITY'S PROJECT MANAGER AND THE LOCAL MEDIA INFORMED OF LANE CLOSURES THAT WILL RESTRICT THE NORMAL FLOW OF TRAFFIC. NOTICE OF LANE CLOSURES OF OTHER IMPACTS TO NORMAL TRAFFIC FLOW SHALL BE PROVIDED AT LEAST ONE (1) WEEK PRIOR TO SUCH CLOSURES OR IMPACTS THIS WORK WILL BE CONSIDERED AS INCIDENTAL TO THE COMPLETION OF THE PROJECT AND NO SEPARATE MEASUREMENT OR PAYMENT WILL BE MADE THEREFOR.

5. CLEANING OF EXISTING STRUCTURES: THE CONTRACTOR SHALL CLEAN ALL EXISTING STRUCTURES THAT ARE TO REMAIN OPERATIONAL, PRIOR TO INITIATING STRUCTURE EXTENSION WORK. STRUCTURES SHALL BE CLEAN PRIOR TO FINAL PROJECT ACCEPTANCE. THIS WORK WILL BE CONSIDERED AS INCIDENTAL TO THE COMPLETION OF THE PROJECT NO SEPARATE MEASUREMENT OR PAYMENT WILL BE MADE THEREFOR.

6. SPECIFICATIONS: THE NEW MEXICO DEPARTMENT OF TRANSPORTATION STANDARD SPECIFICATIONS FOR HIGHWAY AND BRIDGE CONSTRUCTION, 2014 EDITION, WILL GOVERN THE CONSTRUCTION OF THIS PROJECT.

7. ESTIMATED QUANTITIES: ALL QUANTITIES SCHEDULED IN THE PLANS ARE FOR PURPOSES OF PRELIMINARY ESTIMATE ONLY. PAYMENT AND MEASUREMENT OF QUANTITIES SHALL BE DONE IN ACCORDANCE WITH SECTION 109 - MEASUREMENT AND PAYMENT OF THE NMDOT STANDARD SPECIFICATIONS FOR HIGHWAY AND BRIDGE CONSTRUCTION, 2014 EDITION.

8. DISPOSAL OF ASPHALT AND OTHER MATERIAL : THE CONTRACTOR SHALL PROPERLY HANDLE AND DISPOSE OF MATERIAL (E.G., ASPHALT, CONCRETE, VEGETATION, UNSTABLE EARTH, METAL, & OTHER DEBRIS) REMOVED ON THE PROJECT BY HAULING IT TO AN APPROVED LANDFILL IN ACCORDANCE WITH THE REGULATIONS OF THE NEW MEXICO SOLID WASTE ACT. THE CONTRACTOR SHALL BE RESPONSIBLE FOR ALL HAULING AND DUMPING FEES. THIS WORK IS INCLUDED IN ITEM 601000 - REMOVALS OF STRUCTURES AND OBSTRUCTIONS.

9. VERIFYING EXISTING CONDITIONS : THE CONTRACTOR SHALL FIELD VERIFY ALL CONSTRUCTION CENTERLINES AND EXISTING GROUND LINE PROFILES PRIOR TO INITIATING CONSTRUCTION ACTIVITIES. THE CONTRACTOR SHALL UTILIZE THE FIELD VERIFICATION DATA TO ADJUST THE PROPOSED HORIZONTAL AND VERTICAL ALIGNMENTS TO BETTER FIT THE EXISTING FIELD CONDITIONS. THE CONTRACTOR SHALL SUBMIT PROPOSED MODIFICATIONS TO THE PROJECT MANAGER FOR APPROVAL PRIOR TO COMMENCING CONSTRUCTION ACTIVITIES. THE WORK AND COST ASSOCIATED WITH VERIFYING EXISTING CONDITIONS SHALL BE CONSIDERED AS INCLUDED IN THE CONTRACT PRICE FOR ITEM NO. 801000 - CONSTRUCTION STAKING BY THE CONTRACTOR AND NO SEPARATE MEASUREMENT OR PAYMENT WILL BE MADE THEREFOR, THE CONTRACTOR SHALL FIELD VERIFY ALL ELEVATIONS, DIMENSIONS, AND RIGHT-OF-WAY PRIOR TO THE BEGINNING OF CONSTRUCTION. RIGHT-OF-WAY MAPS ARE AVAILABLE FROM THE CITY OF SANTA FE. THE CONTRACTOR SHALL LIMIT ALL WORK ON THIS PROJECT TO WITHIN THE EXISTING RIGHT-OF-WAY OR PUBLIC EASEMENTS. PAYMENT FOR THIS WORK SHALL BE INCLUDED IN THE CONTRACT PRICE.

10. EXCAVATION/STREET CUT PERMITS : THE CONTRACTOR SHALL OBTAIN AN EXCAVATION/STREET CUT PERMIT FROM THE CITY OF SANTA FE PRIOR TO CONSTRUCTION. THE CONTRACTOR SHALL BE RESPONSIBLE FOR ALL FEES ASSOCIATED WITH THESE PERMITS WHICH SHALL BE CONSIDERED INCIDENTAL TO THE COMPLETION OF THE PROJECT AND NO SEPARATE MEASUREMENT OR PAYMENT WILL BE MADE THEREFOR. PERMITS MAY BE OBTAINED FROM THE CITY OF SANTA FE STREETS AND DRAINAGE SECTION, 1142 SILER ROAD, (505) 955-3000.

11. PAVEMENT ABUTMENT : WHEN ABUTTING NEW PAVEMENT TO EXISTING, SAW-CUT EXISTING PAVEMENT TO A NEAR VERTICAL CUT, OR AS APPROVED BY THE PROJECT MANAGER. THE COST OF SAW CUTTINGS SHALL BE INCIDENTAL TO THE PAVEMENT, AND NO SEPARATE MEASUREMENT OR PAYMENT WILL BE MADE THEREFOR.

12. CPM SCHEDULE : THE CONTRACTOR SHALL SUBMIT TO THE PROJECT MANAGER A CRITICAL PATH PROJECT SCHEDULE TWO (2) WEEKS PRIOR TO THE PRECONSTRUCTION CONFERENCE. THE CRITICAL PATH PROJECT SCHEDULE IS TO INCLUDE LOGIC POINTS, OR PRODUCTION LEVELS, USED IN ITS DEVELOPMENT. THE SCHEDULE SHALL BE UPDATED MONTHLY OR AS REQUIRED BY THE PROJECT MANAGER. THE WORK SHALL BE CONSIDERED INCIDENTAL TO THE COMPLETION OF THE PROJECT, AND NO SEPARATE MEASUREMENT OR PAYMENT WILL BE MADE THEREFOR.

13. ADA COMPLIANCE: THE CONTRACTOR SHALL ENSURE COMPLIANCE WITH THE AMERICANS WITH DISABILITIES ACT (ADA) FOR CONSTRUCTION OF ADA FEATURES AND APPURTENANCES (INCLUDING, BUT NOT LIMITED TO, SIDEWALK & CURB RAMP CROSS SLOPES, RAMP SLOPES, LEVEL LANDINGS, ETC) AS DETAILED IN THE PLANS AND IN ACCORDANCE WITH REFERENCED STANDARD DRAWINGS, SPECIFICATIONS AND ESTABLISHED ADA GUIDELINES AND STANDARDS. THE CONTRACTOR IS RESPONSIBLE FOR FIELD CHECKING SLOPES AND DIMENSIONS OF ALL FORM WORK FOR COMPLIANCE PRIOR TO INSTALLATION OF CONCRETE. THE CITY RESERVES THE RIGHT TO INSPECT ANY ADA FEATURES AND APPURTENANCES AT ANY TIME BEFORE FINAL COMPLETION OF THE PROJECT AND MAY REQUIRE THE CONTRACTOR TO REMOVE, REPLACE, AND/OR CORRECT ANY WORK, AT THE CONTRACTOR'S EXPENSE, THAT IS NOT IN COMPLIANCE, AS DETERMINED BY THE PROJECT MANAGER.

14. ALL REFLECTORIZED PLASTIC STRIPING SHALL BE 3M 3801-ES INTERSECTION GRADE TAPE, 60 MIL (NO SUBSTITUTES)

15. NOISE ORDINANCE: CITY OF SANTA FE NOISE ORDINANCE SFCC S 10-2.4 B. (5) (a) PROHIBITS OPERATION OF EQUIPMENT USED IN CONSTRUCTION WORK ON STREETS IN RESIDENTIAL OR COMMERCIALLY ZONED AREAS BETWEEN THE HOURS OF 9:00 P.M. AND 7:00 A.M. THE FOLLOWING DAY. IN ACCORDANCE WITH SFCC S 10-2.8 PERMITS, THE CONTRACTOR MAY REQUEST APPROVAL OF A PERMIT TO BE EXEMPT FROM THE AFOREMENTIONED NOISE ORDINANCE FOR THE DURATION OF PROJECT CONSTRUCTION.

16. CONSTRUCTION YARD : THE CONTRACTOR SHALL PROVIDE AT THE CONTRACTOR'S OWN EXPENSE AND WITHOUT LIABILITY TO THE OWNER ANY ADDITIONAL LAND AND ACCESS THERETO THAT THE CONTRACTOR MAY DESIRE FOR A TEMPORARY STAGING AREA OR YARD FOR STORAGE OF EQUIPMENT AND MATERIALS. NPDES SWPPP MEASURES AND INSPECTIONS TO ANY SUCH AREA OR YARD UTILIZED FOR PURPOSES OF THE PROJECT MAY APPLY THIS WORK IS INCLUDED IN ITEM 621000 - MOBILIZATION..

17. WEEKLY PROJECT MEETING: THE CONTRACTOR SHALL COORDINATE AND CONDUCT A WEEKLY PROJECT MEETING DURING CONSTRUCTION, IN COORDINATION WITH THE PROJECT MANAGER. THE CONTRACTOR SHALL BE RESPONSIBLE FOR OBTAINING MEETING LOCATION AND SHALL INVITE APPROPRIATE CITY STAFF & UTILITY COMPANY REPRESENTATIVES. THE COST ASSOCIATED WITH THESE WEEKLY MEETINGS SHALL BE CONSIDERED INCIDENTAL TO CONSTRUCTION AND NO FURTHER MEASUREMENT OR PAYMENT WILL BE MADE THEREFORE.

18. CONSTRUCTION WATER : THE CITY OF SANTA FE MAY PROHIBIT THE USE OF POTABLE WATER (FROM FIRE HYDRANTS) FOR CONSTRUCTION PURPOSES AND THE CONTRACTOR MAY BE REQUIRED TO USE RECLAIMED OR EFFLUENT WATER. THE CONTRACTOR SHOULD CONTACT THE CITY'S WASTEWATER DIVISION AT 955 4650 FOR MORE INFORMATION AND PRICING. REGARDING THE AVAILABILITY, USE, METERING AND PRICING OF FIRE HYDRANT WATER, CONTACT THE CITY WATER DIVISION AT 955 4333. IT WILL BE THE CONTRACTOR'S RESPONSIBILITY TO SECURE AND SUPPLY WATER FOR THE PROJECT. THE COST WILL BE INCIDENTAL TO COMPLETION OF THE PROJECT AND NO SEPARATE PAYMENT WILL BE MADE THEREFOR.

19. SHRINKAGE FACTOR : THE EARTHWORK QUANTITIES ARE BASED ON A SHRINKAGE FACTOR OF 20% IN ROADWAY EMBANKMENT.

20. "R" VALUE: THE DESIGN "R" FOR THE PROJECT IS 40. MATERIAL WITH AN "R" VALUE LESS THAN THE DESIGN "R" VALUE SHALL NOT BE PLACED IN OR BE ALLOWED TO REMAIN WITHIN THE TOP TWO (2) FEET OF THE FINISHED SUBGRADE. THIS SHALL INCLUDE DETOUR SUBGRADE. REMOVAL OF UNSUITABLE MATERIAL SHALL BE PAID FOR AS ITEM 203200 - SUB EXCAVATION

21. WARPING OF SLOPES: THE CONTRACTOR SHALL WARP SLOPES WHERE NECESSARY TO STAY WITHIN THE RIGHT-OF-WAY OR CONSTRUCTION EASEMENT LIMITS.

22. HANDLING OF MATERIAL : THE CONTRACTOR MAY BE REQUIRED TO DOUBLE HANDLE MATERIAL NEEDED FOR THIS PROJECT. THE COST ASSOCIATED TO DOUBLE HANDLE SUCH MATERIAL SHALL BE CONSIDERED INCIDENTAL TO CONSTRUCTION AND NO FURTHER MEASUREMENT OR PAYMENT WILL BE MADE THEREFOR.

23. NMDOT STANDARD DRAWINGS : MAY BE FOUND ON THE NMDOT'S WEB SITE OR BY USING THE FOLLOWING WEB LINK: http://dot.state.nm.us/en/Standards.html

24. NMDOT STANDARD SPECIFICATIONS FOR HIGHWAY AND BRIDGE CONSTRUCTION, 2014 EDITION : MAY BE FOUND ON THE NMDOT'S WEB SITE OR BY USING THE FOLLOWING WEB LINK:

http://dot.state.nm.us/content/dam/nmdot/Plans_Specs_Estimates/2014_Specs_For_Highway_And_Bridge_Construction.pdf

25. Contractor weekly work schedule : The contractor shall submit for the City project manager's approval a weekly work schedule (I.E. DAYS & HOURS TO BE WORKED) at THE PRECONSTRUCTION MEETING. IF DURING THE COURSE OF CONSTRUCTION The contractor DETERMINES A CHANGE TO THEIR REGULAR WORK SCHEDULE IS NECESSARY, THE CONTRACTOR SHALL submit A REVISED WORK SCHEDULE TO the City project manager FOR approval at least one week in advance of the scheduled work week to allow the City sufficient time to schedule city inspection personnel.

26. GRAFFITI-FREE WORK SITE : THE CONTRACTOR SHALL MAINTAIN A GRAFFITI-FREE WORK SITE. CONTRACTOR SHALL REMOVE GRAFFITI FROM ALL EQUIPMENT, MATERIALS AND WORK, WHETHER PERMANENT OR TEMPORARY, WITHIN 24 HOURS. THIS PROVISION INCLUDES GRAFFITI OR OTHER MARKINGS ON INSTALLED CONCRETE SURFACES. UNTIL THE WORK IS ACCEPTED BY THE CITY, THE CONTRACTOR IS RESPONSIBLE FOR PROTECTION OF CONCRETE AND OTHER PAVED SURFACES INSTALLED AS PART OF THE PROJECT.

27. CONTRACTOR CAN FIELD ADJUST THE TRAIL 1 - 2 FEET HORIZONTALLY TO AVOID OBSTACLES AND LANDSCAPING. SOME OF THIS PLAN SET WAS DEVELOPED ON AERIAL BACKGROUNDS WITHOUT SURVEY INFORMATION. THIS SHALL BE INCIDENTAL TO BID ITEM 608004 - 4" CONCRETE SIDEWALK.

28. CONTRACTOR SHALL ADJUST IRRIGATION ITEMS AS NECESSARY TO CONSTRUCT THE TRAIL. THIS ITEM IS INCIDENTAL TO COMPLETION OF THE PROJECT.

29. CONTRACTOR SHALL CONSTRUCT ACCESS RAMPS TO MEET THE GEOMETRY REQUIREMENTS LISTED IN THE UNITED STATES ACCESS BOARD PROPOSED GUIDELINES FOR PEDESTRIAN FACILITIES IN THE PUBLIC RIGHT-OF-WAY.
WWW.ACCESS-BOARD.GOV/GUIDELINES-AND-STANDARDS/STREETS-SIDEWALKS/PUBLIC-RIGHTS-OF-WAY/PUBLIC-RIGHTS-OF-WAY-GUIDELINES

30. CONTRACTOR SHALL REMOVE ANY CONFLICTING STRIPING NECESSARY TO CONSTRUCT THE MEDIANS ON ALAMEDA. THIS WORK SHALL BE INCIDENTAL TO CONSTRUCTION OF THE ISLANDS.

INCIDENTALS:

1. NOTE 3 - MAINTENANCE OF AS-BUILT PLANS
2. NOTE 4 - NOTIFICATION OF CLOSURES
3. NOTE 5 - CLEANING OF EXISTING STRUCTURES
4. NOTE 10 - EXCAVATION / STREET CUT PERMITS
5. NOTE 12 - SAW CUTTING EXISTING PAVEMENT
6. NOTE 13 - CPM SCHEDULE
7. NOTE 18 - WEEKLY PROJECT MEETING
8. NOTE 19 - CONSTRUCTION WATER
9. NOTE 23 - POSSIBLE DOUBLE HANDLING OF MATERIAL
10. TRAFFIC NOTE 7 - CLEANING OF TRAFFIC CONTROL DEVICES
11. TRAFFIC NOTE 8 - FLAGGING OPERATIONS
12. TRAFFIC NOTE 12 - DRAINAGE DURING CONSTRUCTION
13. TRAFFIC NOTES II-1 - PAVEMENT DROP OFF GUIDELINE
14. UTILITY NOTE 1 - LOCATING EXISTING UTILITIES
15. BED COURSE MATERIAL, EXCAVATION, BACKFILL, EXPANSION JOINT MATERIAL AND COLORING FOR SIDEWALKS
16. DETECTABLE WARNING SURFACES
17. NOTE 28 - ADJUSTMENT OF IRRIGATION SYSTEM
18. NOTE 27 - FIELD ADJUSTMENT OF TRAIL
19. NOTE 30 - REMOVAL OF EXISTING STRIPING
20. PAINTING MEDIAN NOSES YELLOW

PROJECT SPECIFIC SPECIAL PROVISIONS:

SECTION 667 - RECYCLED CONCRETE WALL

SECTION 702-C - TRAFFIC CONTROL DEVICES DURING CONSTRUCTION

JEANETTE A. WALTHER
NEW MEXICO
11243
10/21/14
REGISTERED PROFESSIONAL ENGINEER

No.	Date	REVISIONS	By

Designed By:	JAW	DATE: 07/2014
Drawn By:	LAH	DATE: 07/2014
Checked By:	JAW	DATE: 07/2014

Bohannan Huston
www.bhinc.com 800.877.5332

CITY OF SANTA FE
SANTA FE RIVER TRAIL
CONNECTIONS AND IMPROVEMENTS, PHASE 1
CAMINO DE CHELLY / AGUA FRIA TO CAMINO DEL CAMPO

GENERAL NOTES

CN: S100280

Sheet 1-4

P:\20140268\TRANS\Design\Plan Production\Plans\20140268-GenNotes.dwg
Thu, 13-Nov-2014 - 12:55:pm, Plotted by: LAHINDE

TRAFFIC NOTES

1. THE CONTRACTOR SHALL USE TYPE VIII OR IX DIAMOND GRADE SHEETING A ON ALL CONSTRUCTION SIGNS.

2. RESPONSIBLE PARTY: THE CONTRACTOR SHALL HAVE A CERTIFIED TRAFFIC CONTROL SUPERVISOR ON-SITE DURING WORKING HOURS AND ON CALL DURING NON WORKING HOURS TO INSPECT AND MAINTAIN PROJECT TRAFFIC CONTROL, OR AS DIRECTED BY THE PROJECT MANAGER.

3. MUTCD: THE CONTRACTOR SHALL ADHERE TO ALL REQUIREMENTS LISTED IN THE CURRENT EDITION OF THE MANUAL ON UNIFORM TRAFFIC CONTROL DEVICES (MUTCD)

4. DEVICE REQUIREMENTS : ALL DEVICES SHALL ADHERE TO THE REQUIREMENTS OF SECTION 702 - TRAFFIC CONTROL DEVICES FOR CONSTRUCTION, IN THE 2014 EDITION OF THE NMDOT SPECIFICATIONS BOOK.

5. CONSTRUCTION SIGNING: ALL CONSTRUCTION SIGNING SHALL BE BLACK ON REFLECTIVE ORANGE UNLESS OTHERWISE SPECIFIED. ALL CONSTRUCTION BARRICADES AND CHANNELIZATION DEVICES SHALL BE ORANGE ON WHITE REFLECTORIZED UNLESS OTHERWISE SPECIFIED.

6. REMOVING/COVERING OF SIGNS : ALL NON-APPLICABLE SIGNING, WITHIN OR IN ADVANCE OF THE WORK ZONE, SHALL BE REMOVED OR COVERED COMPLETELY WITH AN OPAQUE NON-LIGHT TRANSMITTING MATERIAL. ALL REMAINING, NON-APPLICABLE TRAFFIC CONTROL DEVICES ARE TO BE REMOVED AND STORED AT LOCATIONS DESIGNATED BY THE PROJECT MANAGER.

7. CLEANING OF SIGNS: ALL TRAFFIC CONTROL DEVICES SHALL BE KEPT CLEAN THROUGHOUT THE DURATION OF CONSTRUCTION. ANY SIGN THAT IS TAGGED BY GRAFFITI SHALL BE CLEANED WITHIN 24 HOURS OR REMOVED AND REPLACED. THIS WORK IS INCIDENTAL TO BID ITEM 702810 - TRAFFIC CONTROL DEVICES FOR CONSTRUCTION.

8. FLAGGING OPERATIONS : FLAGGING SUPERVISED BY A CERTIFIED TRAFFIC CONTROL SUPERVISOR, SHALL BE PROVIDED AS REQUIRED TO MAINTAIN SAFE ACCESS DURING CONSTRUCTION OR AS DIRECTED BY THE PROJECT MANAGER. FLAGGERS SHALL BE LICENSED AND OPERATIONS IN ACCORDANCE WITH THE MUTCD. THE FLAGGER, APPLICABLE SIGNS AND OTHER RELATED ITEMS SHALL BE INCIDENTAL TO CONSTRUCTION, NO MEASUREMENT OR PAYMENT WILL BE MADE THEREFORE. FLOODLIGHTS SHALL BE PROVIDED TO MARK FLAGGER STATIONS AT NIGHT AS NEEDED.

9. TRAFFIC CONTROL PLAN CHANGES : ANY PROPOSED CHANGES TO THE CONSTRUCTION SEQUENCE AND/OR TRAFFIC CONTROL PLAN MUST BE SUBMITTED BY THE CONTRACTOR TO THE PROJECT MANAGER FOR APPROVAL. NO PAYMENT WILL BE MADE FOR ANY ADDITIONAL COST RESULTING FROM CHANGES TO THE CONSTRUCTION SEQUENCE OR TRAFFIC CONTROL PLAN. THE CONTRACTOR SHALL BE REQUIRED TO SUBMIT A LETTER OF JUSTIFICATION FOR THE CHANGES WITH THE FOLLOWING ITEMS INCLUDED:

A REVISED TRAFFIC CONTROL PLAN INCLUDING A SUMMARY OF QUANTITIES AND A COST ESTIMATE.
THE REVISED TRAFFIC CONTROL PLAN SHALL BE DRAFTED ON 11 X 17 PAPER AND SEALED BY A LICENSED ENGINEER. THE SUBMITTAL PAPER SHALL MEET CURRENT DRAFTING STANDARDS.
CHANGES TO THE TRAFFIC CONTROL PLAN MUST BE APPROVED BY THE CITY AT LEAST ONE (1) WEEK IN ADVANCE OF IMPLEMENTING CHANGES TO IN THE FIELD.

10. PEDESTRIAN ACCESS: THE CONTRACTOR SHALL PROVIDE AND MAINTAIN SAFE AND ADEQUATE MEANS OF CHANNELIZING PEDESTRIAN TRAFFIC WITHIN THE PROJECT LIMITS DURING CONSTRUCTION. ACCESS MUST BE PROVIDED ALONG ONE OR BOTH SIDES OF CONSTRUCTION AT ALL TIMES. MARKED CROSSINGS MUST BE PROVIDED AT ALL SIGNALIZED INTERSECTIONS. THIS WORK MAY INCLUDE TEMPORARY WALKWAYS, SIGNING, PROTECTION RAILING, AND PLACEMENT OF CONCRETE WALL BARRIER.

11. BUS SERVICE: THE CONTRACTOR SHALL CONTACT THE CITY OF SANTA FE TRANSIT DEPARTMENT (JOHN BULTHUIS OR CASEY PADILLA: 955-2006) TO COORDINATE THE TEMPORARY REMOVAL OR RELOCATION OF BUS STOPS AS REQUIRED DURING CONSTRUCTION. DETERMINATION FOR REMOVAL OR RELOCATION OF BUS STOPS SHALL BE AT SOLE DISCRETION OF THE CITY OF SANTA FE. THE CONTRACTOR SHALL NOTIFY THE BUS COMPANY OF ANY LANE CLOSURES. THIS WORK IS INCLUDED IN BID ITEM 618000 - TRAFFIC CONTROL MANAGEMENT.

12. DRAINAGE DURING CONSTRUCTION: THE CONTRACTOR SHALL PROVIDE FOR ADEQUATE DRAINAGE, FREE OF PONDING, WITHIN THE LIMITS OF THE PROJECT DURING CONSTRUCTION. THIS SHALL INCLUDE ROADWAY AND ANY TEMPORARY FACILITIES, ACCESS ROADS, OR DRIVEWAYS CONSTRUCTED FOR THE PROJECT. THIS WORK, WHICH MAY REQUIRE TEMPORARY DRAINAGE CONSTRUCTION, PUMPING, OR OTHER METHODS; WILL BE CONSIDERED INCIDENTAL TO COMPLETION OF THE PROJECT AND NO SEPARATE MEASUREMENT OR PAYMENT WILL BE MADE. DIVERSION OF DRAINAGE ONTO PRIVATE PROPERTY WILL NOT BE PERMITTED.

13. ACCESS TO BUSINESSES AND RESIDENCES : THE CONTRACTOR SHALL PROVIDE INGRESS AND EGRESS TO ALL BUSINESSES AND RESIDENTS IMPACTED BY CONSTRUCTION FOR THE DURATION OF THIS PROJECT. THE CONTRACTOR SHALL SCHEDULE ALL ACCESS CLOSURES WITH THE PROJECT MANAGER AT LEAST ONE WEEK PRIOR TO CLOSURE. THE CONTRACTOR SHALL NOTIFY ALL BUSINESSES AND RESIDENCES THAT WILL BE IMPACTED BY PROPOSED CLOSURE AT LEAST 48 HOURS IN ADVANCE.

14. TRAFFIC CONTROL PLAN : THE CONTRACTOR SHALL BE RESPONSIBLE FOR PROVIDING AN APPROVED TRAFFIC CONTROL PLAN FOR THIS PROJECT IN ACCORDANCE WITH SPECIAL PROVISION 618 - TRAFFIC CONTROL MANAGEMENT. ALL TRAFFIC CONTROL DEVICES TO BE USED IN THIS PROJECT SHALL COMPLY WITH SECTION 702 - CONSTRUCTION TRAFFIC CONTROL DEVICES OF THE NMDOT STANDARD SPECIFICATIONS FOR HIGHWAY & BRIDGE CONSTRUCTION, 2014 EDITION.

15. THE CONTRACTOR SHALL RESTRICT HIS OPERATION BETWEEN THE HOURS OF 7:00AM TO 8:30AM AND 4:00PM TO 6:00PM, MONDAY THRU FRIDAY SO AS TO NOT IMPEDE RUSH HOUR TRAFFIC. THE CONTRACTOR SHALL COMPLY WITH CITY OF SANTA FE ORDINANCES, AS REQUIRED, REGARDING WORKING HOUR LIMITATIONS. AT ALL TIMES, ACCESS SHALL BE PROVIDED TO PROPERTIES AND BUSINESSES.

16. THE CONTRACTOR SHALL USE WATER BLASTING ERADICATION FOR STRIPING REMOVAL ONLY ON PAVED SURFACES NOT RECONSTRUCTED, REPAVED OR RESURFACED.

17. THE CONTRACTOR SHALL PROVIDE APPROPRIATE SIDEWALK CLOSURE SIGNAGE AND PEDESTRIAN DETOURS MEETING ADA REQUIREMENT SHALL BE INSTALLED PER THE MUTCD FOR TEMPORARY CONSTRUCTION ACTIVITIES AFFECTING PEDESTRIAN TRAVEL. PAYMENT FOR THIS WORK SHALL BE INCLUDED IN THE PRICE FOR ITEM 702810 - TRAFFIC CONTROL DEVICES FOR CONSTRUCTION.

TRAFFIC NOTES II

1. PAVEMENT DROP-OFF GUIDELINE
IN THE AREAS OF PAVEMENT OPERATIONS OR OTHER ACTIVITIES WITHIN THE TRAVELED WAY AND ADJACENT TO THE EXISTING TRAVEL LANE, THE CONTRACTOR SHALL ASSURE THAT NO PAVEMENT DROP-OFFS ARE LEFT EXPOSED DURING NON-WORKERS HOURS. THE CONTRACTOR SHALL INITIATE CORRECTIVE MEANS AS PER "THE NEW MEXICO DEPARTMENT OF TRANSPORTATION PAVEMENT DROP-OFF GUIDELINE" TO ACHIEVE A MINIMUM 6:1 SLOPE BETWEEN TRAVELED LANES AND A MINIMUM 3:1 SLOPE ADJACEMENT TO THE EXISTING TRAVELED LANE WITH TWO 11 FOOT DRIVING LANES AS SHOWN IN THE DETAIL BELOW. THIS WORK SHALL BE INCIDENTAL TO CONSTRUCTION AND NO SEPARATE MEASUREMENT OR PAYMENT WILL BE MADE THEREFOR.

2. SEQUENTIAL ARROW
PLACEMENT OF THE SEQUENTIAL ARROW SHALL BE AT OR NEAR THE BEGINNING OF THE LANE CLOSURE TAPER. IN AREAS OF INSUFFICIENT PAVEMENT WIDTH, THE SEQUENTIAL ARROW MAY BE PLACED WITHIN THE TAPER, BUT SHOULD NOT BE PLACED BEYOND MID-POINT OF THE TAPER LENGTH. IN ALL CASES, THE SEQUENTIAL ARROW SHALL BE PLACED BEHIND THE CHANNELIZATION DEVICES.

3. TAPERS IN VERTICAL CURVES
IN THE EVENT THAT A TAPER OCCURS IN A VERTICAL CURVE, A LONGITUDINAL BUFFER SPACE SHALL BE PROVIDED SO AS THE POSITION THE TAPER AND SEQUENTIAL ARROW IN ADVANCE OF THE VERTICAL CURVE TO OBTAIN ADEQUATE SIGHT DISTANCE OF THESE DEVICES.

4. TAPERS IN HORIZONTAL CURVES
IN THE EVENT THAT A TAPER OCCURS IN A HORIZONTAL CURVE, A LONGITUDINAL BUFFER SPACE SHALL BE PROVIDED SO AS THE POSITION THE TAPER AND SEQUENTIAL ARROW IN ADVANCE OF THE HORIZONTAL CURVE TO OBTAIN ADEQUATE SIGHT DISTANCE OF THESE DEVICES.

5. STEEL POST AND BASE POSTS
THE CONTRACTOR SHALL HAVE THE OPTION OF SUPPLYING EITHER SQUARE TUBING POSTS OR FLANGED CHANNEL U-POSTS (STEEL POSTS AND BASE PASTS FOR CONSTRUCTION SIGNING) AS PER STANDARD DRAWING 701-02-1/3 OR 701-02-2/3.

6. TRAFFIC CONTROL PLAN CHANGES
NO PAYMENT WILL BE MADE FOR ANY ADDITIONAL COST RESULTING FROM APPROVED TRAFFIC CONTROL CHANGES REQUESTED BY THE CONTRACTOR.

UTILITY GENERAL NOTES:

1. EXISTING UTILITIES : THE CONTRACTOR SHALL LOCATE ALL UTIITIES WITHIN THE CONSTRUCTION LIMITS OF THIS PROJECT PRIOR TO COMMENCING ANY CONTRUCTION ACTIVITIES. THIS WORK MAY INCLUDE POT HOLING. COSTS ASSOCIATED WITH LOCATING EXISTING UTILITIES ARE CONSIDERED INCIDENTAL AND NO SEPARATE MEASUREMENT OR PAYMENT WILL BE MADE THEREFOR. IF EXISTING UTILTIES ARE DAMAGED DURING POTHOLE OPERATIONS OR DURING CONSTRUCTION ALL WORK OR COSTS ASSOCIATED WITH REPAIRING DAMAGED UTILITIES SHALL BE AT THE CONTRACTOR'S EXPENSE AND WILL BE CONSIDERED INCIDENTAL TO THE COMPLETION OF THE PROJECT AND NO SEPARATE MEASUREMENT OR PAYMENT WILL BE MADE THEREFOR.

3. CONTRACTOR COORDINATION WITH UTILITY OWNERS : THE CONTRACTOR IS HERERY ADVISED THAT UTILITY RELOCATING WORK BY THE UTILITY OWNERS MAY HAVE TO BE PERFORMED CONCURRENT WITH CONSTRUCTION. THE CONTRACTOR SHALL PROVIDE FOR UTILITY WORK IN CONJUNCTION WITH RESPECTIVE UTILITY OWNERS. ANY CLAIMS FOR DELAY SHALL BE CONTROLLED BY THE TERMS AND CONDITIONS OF SUBSECTIONS 105.6 - COOPERATION WITH UTILITIES, AND 107.20 - CONTRACTOR'S RESPONSIBILITY OF THE NMDOT STANDARD SPECIFICATIONS FOR HIGHWAY & BRIDGE CONSTRUCTION, 2014 EDITION

4. CONTRACTOR SHALL PREVENT ANY DEBRIS FROM ENTERING THE SANITARY SEWER DURING CONSTRUCTION. SPECIAL ATTENTION SHALL BE GIVEN TO THE SANITARY SEWER TO PREVENT STOPPAGE OR DAMAGES. THE CONTACTOR SHALL BE RESPONIBLE FOR ALL COST ASSOCIATED WITH ANY MAINTENANCE, INCLUDING BY-PASS PUMPING OR DAMAGES CAUSED BY CONSTRUCTION.

5. THE CONTRACTOR WILL NOT RECEIVE ADDITIONAL COMPENSATION OR TIME EXTENSION FOR DELAYS OR INCONVENIENCES OR DAMAGES SUSTAINED DUE TO ANY INTERFERENCE FROM SAID UTILITY APPURTENANCES OR THE OPERATION OF MOVING THEM RESULTING FROM CONTRACTOR'S NEGLIGENCE.

6. CENTURYLINK (OR OTHER) FIBER OPTIC LINE : THE CONTRACTOR SHALL NOTIFY CENTURYLINK 72 HOURS IN ADVANCE OF ANY EXCAVATION WORK IN THE AREA OF A FIBER OPTIC LINE. THE CONTRACTOR SHALL COORDINATE WITH CENTURYLINK DURING EXCAVATION EFFORT, SO CENTURYLINK CAN PROVIDE THE LABOR AND MATERIAL TO PROPERLY SUPPORT THE FIBER OPTIC LINE BEFORE SOIL IS REMOVED FROM UNDER THE LINE. COORDINATION OF WORK SHALL BE INCIDENTAL TO THE PROJECT.

7. THERE ARE EXISTING IRRIGATION LINES IN THE MEDIAN ON CONQUISTADORA. CONTRACTOR SHALL REPLACE THE IRRIGATION LINES IF NECESSARY TO CONSTRUCT MEDIAN OPENING. THIS WORK SHALL BE CONSIDERED INCIDENTAL TO THE COMPLETION OF THE PROJECT.

JEANETTE A. WALTHER
NEW MEXICO
11243
10/21/14
REGISTERED PROFESSIONAL ENGINEER

No.	Date	REVISIONS	By

Designed By:	JAW	DATE: 07/2014
Drawn By:	LAH	DATE: 07/2014
Checked By:	JAW	DATE: 07/2014

Bohannan Huston
www.bhinc.com 800.877.5332

CITY OF SANTA FE
SANTA FE RIVER TRAIL
CONNECTIONS AND IMPROVEMENTS, PHASE 1
CAMINO DE CHELLY / AGUA FRIA TO CAMINO DEL CAMPO

GENERAL NOTES

CN: S100280

Sheet 1-5

P:\20140268\TRANS\Design\Plan Production\Plans\20140268-GenNotes.dwg
Thu, 13-Nov-2014 - 12:55:pm, Plotted by: LAHINDE

ENVIRONMENTAL COMMITMENTS

THE CONTRACTOR SHALL REFER TO SECTION 107 OF THE STANDARD SPECIFICATION, MAKING SPECIAL NOTE OF SUB-SECTION 107.14: CONTRACTORS RESPONSIBILITIES FOR ENVIRONMENTAL AND CULTURAL RESOURCE APPROVAL.

☐ NO ADDITIONAL PROJECT-SPECIFIC ENVIRONMENTAL REQUIREMENTS APPLY.

☒ IN ADDITION TO SECTION 107, THE FOLLOWING PROJECT-SPECIFIC ENVIRONMENTAL REQUIREMENTS APPLY:

ENVIRONMENTAL COMMITMENTS NOTES

1) THE CONTRACTOR SHALL MINIMIZE VEGETATION AND SOIL DISTURBANCE FOR ALL LOCATIONS WHERE EQUIPMENT WILL BE PARKED DURING CONSTRUCTION, AND THE CONTRACTOR SHALL ACQUIRE ENVIRONMENTAL AND CULTURAL RESOURCES CLEARANCES FOR THESE SITES IN ACCORDANCE WITH SECTION 107.14 OF THE 2014 EDITION OF THE NMDOT STANDARD SPECIFICATIONS FOR HIGHWAY AND BRIDGE CONSTRUCTION.

2) THE CONTRACTOR SHALL NOT TAKE MIGRATORY BIRDS, OCCUPIED NESTS, AND EGGS DURING THE PROJECT. IF CLEARING OF SHRUBS OR TREES BEGINS BETWEEN APRIL 15 AND AUGUST 15, THE CITY SHALL CONDUCT A PRE-CONSTRUCTION NESTING BIRD SURVEY AND SUBMIT A LETTER REPORT TO THE NMDOT ENVIRONMENTAL DIVISION (GWYNETH DUNCAN 505-827-0751) AT LEAST 2 WEEKS PRIOR TO THIS TYPE OF ACTIVITY. VACATED NESTS SHALL BE REMOVED FROM STRUCTURES DURING THE NON-NESTING SEASON (SEPTEMBER-FEBRUARY).

3) TO PREVENT THE SPREAD OF NOXIOUS WEEDS, THE CONTRACTOR SHALL THOROUGHLY CLEAN ALL EQUIPMENT WITH A HIGH PRESSURE WASHER PRIOR TO ENTERING AND LEAVING THE PROJECT AREA. MATERIALS TRANSPORTED INTO OR OUT OF THE PROJECT AREA SHALL BE CAREFULLY INSPECTED TO AVOID THE INTRODUCTION OF ADDITIONAL NOXIOUS WEED SPECIES. MATERIAL SOURCES CONTAINING NOXIOUS WEED SEEDS SHALL NOT BE UTILIZED BY THE CONTRACTOR. MULCH AND COMPOST USED ON THE PROJECT MUST BE CERTIFIED NOXIOUS WEED FREE, AS REQUIRED BY SECTION 632 OF THE 2014 EDITION OF THE NMDOT STANDARD SPECIFICATIONS FOR HIGHWAY AND BRIDGE CONSTRUCTION.

4) BEST MANAGEMENT PRACTICES (BMP'S) SHALL BE INSTALLED AND MAINTAINED BOTH DURING AND AFTER CONSTRUCTION TO PREVENT, TO THE EXTENT PRACTICABLE, POLLUTANTS IN STORM WATER RUNOFF FROM ENTERING WATERS OF THE U.S. TEMPORARILY DISTURBED AREAS WILL BE RE-VEGETATED AFTER CONSTRUCTION TO LIMIT EROSION POTENTIAL.

5) IF BURIED ARCHEOLOGICAL OR CULTURAL DEPOSITS ARE DISCOVERED DURING CONSTRUCTION, WORK IN THE AREA SHALL CEASE WHILE THE SHPO, THE NMDOT, AND THE LOCAL/TRIBAL GOVERNMENT ARE CONSULTED.

C. Blake Rayburn — 9-2-14

ENVIRONMENTAL SECTION MANAGER, NEW MEXICO DEPARTMENT OF TRANSPORTATION — DATE

JEANETTE A. WALTHER — NEW MEXICO — 11243 — REGISTERED PROFESSIONAL ENGINEER

No.	Date	REVISIONS	By

Designed By:	JAW	DATE: 07/2014
Drawn By:	LAH	DATE: 07/2014
Checked By:	JAW	DATE: 07/2014

Bohannan Huston
www.bhinc.com 800 877.5332

CITY OF SANTA FE
SANTA FE RIVER TRAIL
CONNECTIONS AND IMPROVEMENTS, PHASE 1
CAMINO DE CHELLY / AGUA FRIA TO CAMINO DEL CAMPO

ENVIRONMENTAL COMMITMENTS

CN: S100280

Sheet 1-6

P:\20140268\TRANS\Design\Plan Production\Plans\20140268-ER.dwg
Tue, 2-Sep-2014 - 9:49:am, Plotted by: JWALTHER

GENERAL ADA NOTES

1. THESE DRAWINGS PROVIDE GUIDANCE FOR COMPLIANCE WITH THE CURRENT PUBLIC RIGHT OF WAY ACCESSIBILITY GUIDELINES (PROWAG). THESE STANDARDS SHALL APPLY TO ALL NEW AND ALTERED SIDEWALKS.

2. SURFACES SHALL BE STABLE, FIRM AND SLIP RESISTANT, SIDEWALK AND CURB RAMP SURFACES SHALL PROVIDE CONSISTENT SLOPES WITHIN EACH SECTION.

3. ALL BROOM FINISHES SHALL BE PERPENDICULAR TO THE DIRECTION OF PEDESTRIAN TRAVEL.

4. A VERTICAL CHANGE OF 1/4 INCH (6MM) OR LESS IS ALLOWED IF BETWEEN 1/4 INCH AND 1/2 INCH (6MM AND 13MM). THEN IT NEEDS TO BE BEVELED 2:1. CHANGES GREATER THAT 1/2 INCH SHALL BE RAMPED.

5. OPENING OR CRACKS IN SIDEWALK SURFACES SHALL NOT EXCEED 1/2 INCH (13MM). ELONGATED OPENING SHOULD BE PLACED SO THAT THE LONG DIMENSION IS PERPENDICULAR OR DIAGONAL TO THE DOMINANT DIRECTION OF TRAVEL.

6. THE LEAST POSSIBLE CURB RAMP SLOPE SHALL BE USED. CURB RAMPS RUNNING SLOPE SHALL NOT EXCEED 12:1. WHERE EXISTING TERRAIN IS STEEP, CURB RAMPS SHALL NOT EXCEED 15 FEET IN LENGTH.

7. PROVIDE A FLUSH TRANSITION BETWEEN CURB RAMPS, SIDEWALKS, GUTTER, AND EDGE OF PAVEMENT, FREE OF DRAINAGE LIP, ABRUPT GRADE CHANGES, DROP-OFFS, OR ANY SURFACE IRREGULARITIES. A 5% (20:1) OR FLATTER TRANSITION TAPER SHALL BE PROVIDED FROM THE STREET TO THE GUTTER FROM CURB RAMP LOCATIONS (THIS MAY REQUIRE SPECIAL TREATMENT OF THE EDGE OF O.G.F.C.) WHEN DIAGONAL (NOT IN LINE WITH CROSSWALKS) CURB RAMPS ARE NECESSARY. A 2% (50:1) TRANSITION OR "LOWER LANDING" SHALL BE PROVIDED. THE GUTTER RUNNING SLOPE (FLOW LINE) SHALL NOT EXCEED 2% MEASURED ALONG THE BOTTOM OF THE CURB RAMP.

8. CURB RAMPS SHALL BE LOCATED TO PROVIDE THE MOST DIRECT ROUTE OF TRAVEL ACROSS THE TRAFFIC LANES.

9. TWO DIRECTIONAL (IN LINE WITH THE CROSSWALKS) CURB RAMPS PER CORNER ARE USED IN ORDER TO PROVIDE SHORT AND DIRECT CROSSINGS FOR THE USER.

10. SIGN POSTS, UTILITY POLES, FIRE HYDRANTS, TRAFFIC SIGNAL STANDARDS, LIGHT POLES, PULL BOXES, METERS, VALVES, ETC. SHALL NOT BE LOCATED IN THE CURB RAMP INCLUDING SIDE FLARES AND LANDINGS.

11. IN ORDER TO BETTER ACCOMMODATE CONDITIONS IN THE FIELD, THE CONTRACTOR SHALL OBTAIN FINAL APPROVAL OF CURB RAMP LOCATIONS FOR THE PROJECT MANAGER AND THE CITY TRAFFIC ENGINEER. WHEN NECESSITATED BY EXISTING PHYSICAL CONDITIONS. ALTERNATE CURB RAMPS MUST BE SUBMITTED TO THE PROJECT MANAGER FOR APPROVAL BY THE CITY TRAFFIC ENGINEER.

12. LANDINGS SHALL BE A MINIMUM OF 48" X 48". SLOPES SHALL NOT EXCEED 2% (50:1) IN ALL DIRECTIONS.

13. DETECTABLE WARNINGS ARE REQUIRED AT ALL STREET INTERSECTIONS. SIGNALIZED DRIVEWAYS, COMMERCIAL DRIVEWAYS 30' WIDE OR GREATER, AND MARKED MID-BLOCK CROSSWALKS.

14. SUBMIT SPECIFICATIONS TO CONSTRUCTION ENGINEER FOR EVALUATION PRIOR TO CONSTRUCTION.

15. CONCRETE PROCEDURAL NOTE: BEFORE SCHEDULING DELIVERY OF CONCRETE, CONTRACTOR SHALL MEET WITH CITY INSPECTOR/PM TO ENSURE THE CONCRETE FORMWORK IS CONSTRUCTED TO DIMENSIONS AND GRADES SHOWN ON PLANS AND MEETS PROWAG, 2011 TECHNICAL DESIGN CRITERIA. CALIBRATE 24" ELECTRONIC DIGITAL LEVEL WITH CONTRACTOR'S ELECTRONIC DIGITAL LEVEL PRIOR TO VERIFYING MEASUREMENTS. VERIFY MEASUREMENTS MEET REQUIREMENTS OR REQUIRE CORRECTION OF ALL DISCREPANCIES BEFORE SCHEDULING OF CONCRETE TO ENSURE THE FINISHED CONCRETE WILL MEET PROWAG. WHEN ALL MEASUREMENTS MEET REQUIREMENTS THEN THE INSPECTOR SHALL PERMIT CONCRETE POUR, REPEAT THE PROCEDURE AFTER CONCRETE POUR TO ENSURE THE CURB RAMP MEETS PROWAG COMPLIANCE. FINAL ACCEPTANCE OF A CURB RAMP DOES NOT OCCUR UNTIL THE FINAL INSPECTION OF THE PROJECT.

JEANETTE A. WALTHER
NEW MEXICO
11243
12/5/14
REGISTERED PROFESSIONAL ENGINEER

No.	Date	REVISIONS	By

Designed By: JAW DATE: 11/2014
Drawn By: LAH DATE: 11/2014
Checked By: JAW DATE: 11/2014

Bohannan Huston
www.bhinc.com 800.877.5332

CITY OF SANTA FE
SANTA FE RIVER TRAIL
CONNECTIONS AND IMPROVEMENTS, PHASE 1
CAMINO DE CHELLY / AGUA FRIA TO CAMINO DEL CAMPO

GENERAL ADA NOTES

CN: S100280

Sheet 1-7

P:\20140268\TRANS\Design\Plan Production\Plans\20140268-GenNotes.dwg
Mon, 2-Feb-2015 - 10:56:am, Plotted by: JWALTHER

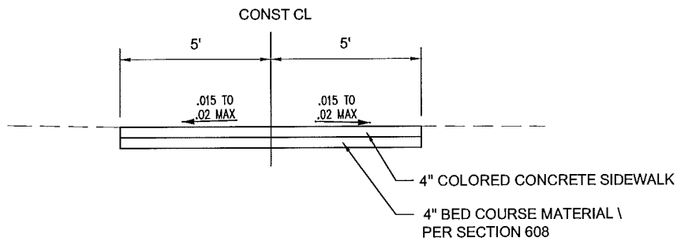

PROPOSED TYPICAL TRAIL SECTION

STA 400+00.00 TO 402+50.00 W. ALAMEDA
STA 404+90.00 TO 416+15.47 W. ALAMEDA
STA 416+54.90 TO 421+71.00 W. ALAMEDA
STA 100+00.00 TO STA 102+43.58 FRENCHY'S PARK

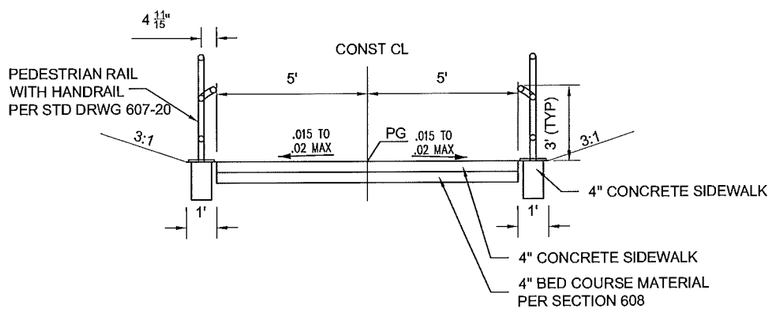

PROPOSED TYPICAL TRAIL SECTION

STA 200+00.00 TO STA 200+75 CONQUISTADORA

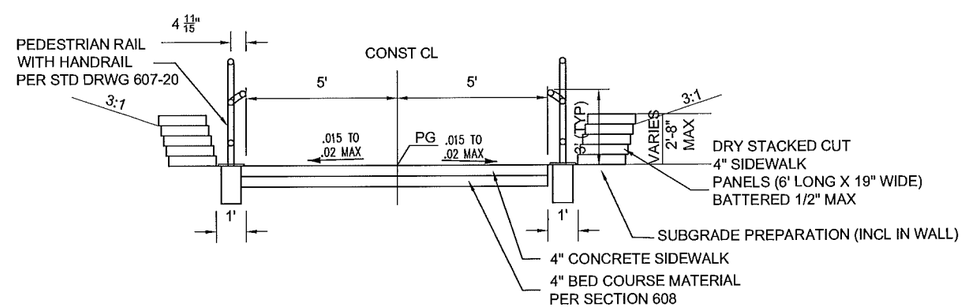

PROPOSED TYPICAL TRAIL SECTION

STA 200+75.00 TO STA 201+03.30 CONQUISTADORA

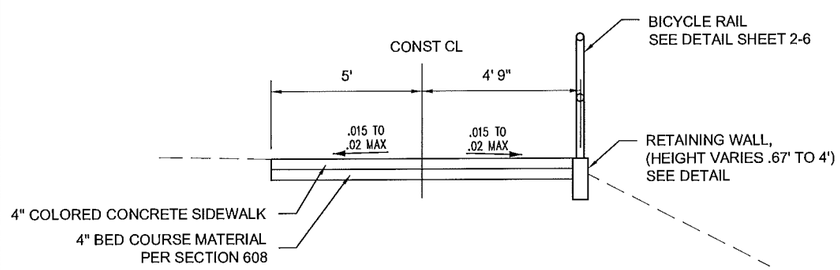

PROPOSED TYPICAL TRAIL SECTION

STA 402+50.00 TO STA 404+90.00 W. ALAMEDA

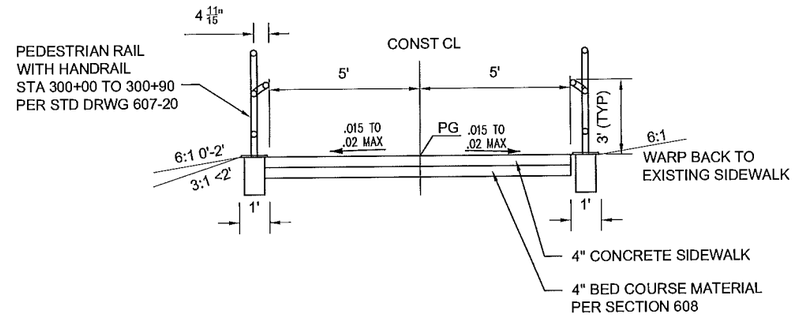

PROPOSED TYPICAL TRAIL SECTION

STA 300+00.00 TO STA 301+92.99 ALTO PARK

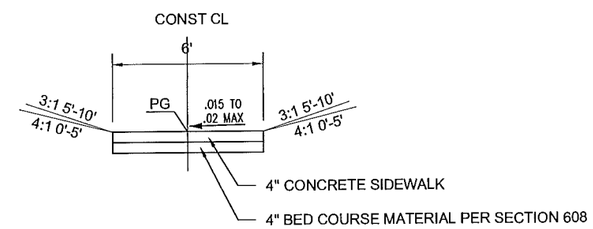

PROPOSED TYPICAL TRAIL SECTION

STA 250+00.00 TO 250+39.73 CONQUISTADORA

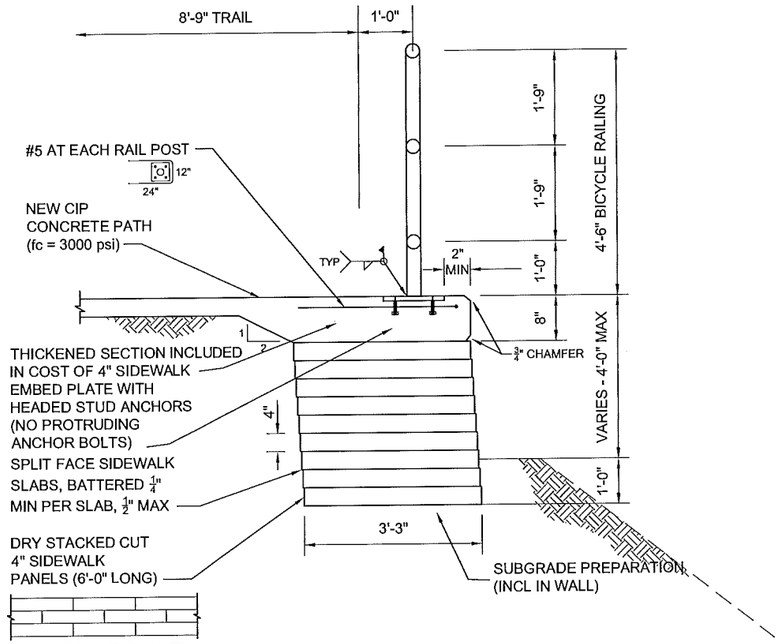

WALL PROFILE

WALL DETAIL

STA 402+50.00 TO 404+90.00 W. ALAMEDA

NOTES:

1. INSTALL EXPANSION JOINT BETWEEN TRAIL AND BACK OF CURB PER STD DWG 609-01-1/1.
2. CONCRETE JOINTS IN TRAIL SHALL BE SAWCUT 10' ON CENTER WITH FULL DEPTH EXPANSION JOINT AT 60' ON CENTER.
3. BED COURSE MATERIAL IS INCLUDED IN THE UNIT BID PRICE FOR CONCRETE SIDEWALK.
4. THE CONCRETE SIDEWALK AT FRENCHY'S PARK AND ALAMEDA SHALL HAVE INTEGRAL BROWN COLOR, DAVIS COLOR #641 YOSEMITE BROWN OR APPROVED EQUAL. COLOR SHALL BE INCIDENTAL TO ITEM NUMBER 608004 - SIDEWALK.
5. CONCRETE TRAIL MUST BE CONSTRUCTED BEFORE RECYCLED CONCRETE WALLS ARE BACKFILLED ON CONQUISTADORA.
6. SEE NOTICE TO CONTRACTOR FOR PEDESTRIAN AND BIKE RAIL

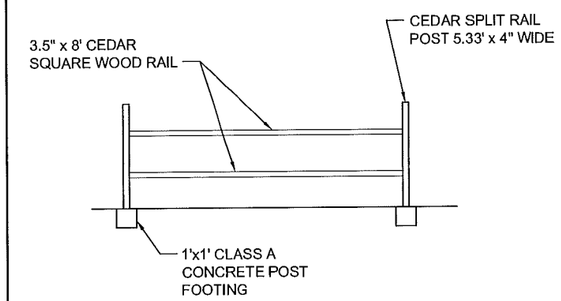

CEDAR RAIL FENCE DETAIL

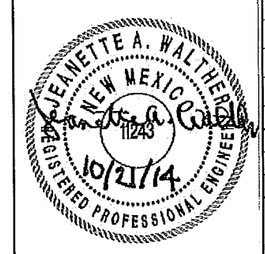

No.	Date	REVISIONS	By

Designed By:	JAW	DATE: 07/2014
Drawn By:	LAH	DATE: 07/2014
Checked By:	JAW	DATE: 07/2014

Bohannan Huston
www.bhinc.com 800.877.5332

CITY OF SANTA FE
SANTA FE RIVER TRAIL
CONNECTIONS AND IMPROVEMENTS, PHASE 1
CAMINO DE CHELLY / AGUA FRIA TO CAMINO DEL CAMPO

TYPICAL SECTIONS

CN: S100280

Sheet 2-1

P:\20140268\TRANS\Design\Plan Production\Plans\20140268-TypSec.dwg
Thu, 13-Nov-2014 - 12:55:pm, Plotted by: LAHINDE

SIDEWALK

DESCRIPTION	STATION	TO	STATION	FT	608004 SIDEWALK 4" WIDTH	SQ YD
FRENCHY'S PARK	100+00.00		102+43.58	243.58	10	270.64
FRENCHY'S PARK	102+43.58		102+90.47	46.89	CALC	102.78
FRENCHY'S PARK ACCESS RAMP				25.60	4.2	11.95
						385.37
						390.00
CONQUISTADORA	200+00.00		201+03.30	103.30	10	114.78
CONQUISTADORA	250+00.00		250+34.73	34.73	6	23.15
CONQUISTADORA ALONG STREET				7.50	4	3.33
CONQUISTADORA ALONG STREET				7.50	5	4.17
CONQUISTADORA MEDIAN				12.27	10	13.63
FLARES AT TRAIL CONNECTION					CALC	6.00
						165.06
						170.00
ALTO PARK	300+00.00		301+92.99	192.99	10	214.43
ALTO PARK TRIANGLE				10.35	7	3.89
ALTO PARK ACCESS RAMP				6.00	3.52	2.35
ALTO PARK ACCESS RAMP				10.00	4	4.44
LA MADERA SW CORNER RAMP					CALC	12.22
						237.34
						240.00
ALAMEDA	400+00.00		406+46.45	646.45	10	718.28
ALAMEDA	406+76.47		416+15.47	939.00	10	1043.33
ALAMEDA	416+54.90		421+71.00	516.10	10	573.44
ALAMEDA	421+71.00		422+08.13	37.13	9.25	38.16
CONNECTION TO PICNIC TABLE SLAB	411+70.00			7.25	6	4.83
ALAMEDA TRAIL ACCESS RAMPS (3 TOTAL ON SOUTH SIDE OF STREET)					CALC	36.43
CANDELARIO ACCESS RAMPS (2 TOTAL, NORTH SIDE OF STREET)					CALC	19.50
CANDELARIO CURB DROP INLET				10.00	4.33	4.81
ALAMEDA ACCESS RAMP (SALVATION ARMY)					CALC	12.83
ALAMEDA MEDIAN (SALVATION ARMY)				9.00	10	10.00
ALAMEDA TRAIL FLAIR	406+46.00				CALC	1.39
						2463.01
						2465.00
					TOTAL	3265.00

SEED TYPE	GENUS/SPECIES	COMMON NAME	SEED RATE LBS/ACRE OF PURE LIVE SEED
GRASSES	*Achnatherum hymenoides*	Indian Ricegrass	1.5
	Bouteloua gracilis	Blue Grama	4
	Bouteloua curtipendula	Sideoats Grama	3
	Buchloe dactyloides	Buffalograss	8
	Muhlenbergia wrightii	Spike Muhly	1
	Pascopyrum smithii	Western Wheatgrass	2
	Pleuraphis jamesii	Galleta	1
	Schizachyrium scoparium	Little Bluestem	2
PERENNIALS	*Sporobolus airoides*	Alkali Sacaton	1
	Castilleja integra	Orange paintbrush	1
	Gaillardia pulchella	Firewheel	2
	Linum lewisii	Blue Flax	1.5
	Lupinus argenteus	Silvery Lupine	1.5
	Oenoethera hookeri	Hooker's evening primrose	1
	Penstemun barbatus	Scarlet bugler	2
	Penstemun strictus	Rocky Mountain penstemon	2
	Verbena bipinnatifida	Great Plains Verbena	1
		TOTAL	35.5

667500 - BOLLARD

STA	DESCRIPTION	LOC	QTY
200+10	CONQUISTADORA	CL	1

LUMP SUM ITEMS

ITEM NO.	DESCRIPTION	UNIT	QTY
201000	CLEARING AND GRUBBING	LS	LS
618000	TRAFFIC CONTROL MANAGEMENT	LS	LS
621000	MOBILIZATION	LS	LS
801000	CONSTRUCTION STAKING BY THE CONTRACTOR	LS	LS
802000	POST CONSTRUCTION PLANS	LS	LS

DESCRIPTION	603261 COMPOSTED MULCH SOCKS LOC	LF
CONQUISTADORA	STATION 200+10 TO 200+93	30.00
ALAMEDA	STATION 402+00 TO 405+50	350.00
	TOTAL	380.00
	USE	380.00

FENCE

DESCRIPTION	667319 CEDAR RAIL FENCE LOC	LF
FRENCHY'S PARK	EXISTING OPENING	20.00
CONQUISTADORA	WEST PROPERTY LINE	56.00
CONQUISTADORA	SOUTH PROPERTY LINE	20.00
	TOTAL	96.00
	USE	100.00

RAIL

DESCRIPTION	543100 METAL RAILING, PEDESTRIAN LOC	LF	543200 METAL RAILING, BICYCLE LOC	LF
CONQUISTADORA	STATION 200+10 TO 200+93	152.00		
CONQUISTADORA	STATION 250+00 TO 250+30	70.00		
ALTO PARK	STATION 300+00 TO 300+90	180.00		
ALAMEDA			STATION 402+35 TO 405+00	265.00
	TOTAL	402.00	TOTAL	265.00
	USE	405.00	USE	265.00

P:\20140268\TRANS\Design\Plan Production\Plans\20140268-MiscQuan2-2-15.dwg
Mon, 2-Feb-2015 - 9:15:am, Plotted by: LAHINDE

JEANETTE A. WALTHER
NEW MEXICO
11243
2/9/15
REGISTERED PROFESSIONAL ENGINEER

No.	Date	REVISIONS	By

Designed By: JAW DATE: 11/2014
Drawn By: LAH DATE: 11/2014
Checked By: JAW DATE: 11/2014

Bohannan Huston
www.bhinc.com 800.877.5332

CITY OF SANTA FE
SANTA FE RIVER TRAIL
CONNECTIONS AND IMPROVEMENTS, PHASE 1
CAMINO DE CHELLY / AGUA FRIA TO CAMINO DEL CAMPO

MISCELLANEOUS QUANTITIES

CN: S100280

Sheet 2-2

CURB	609200 HEADER CURB		609418 CONCRETE VERTICAL CURB & GUTTER B 6" X 18"		609424 CONCRETE VERTICAL CURB & GUTTER B 6" X 24"	
DESCRIPTION	LOC	LF	LOC	LF	LOC	LF
FRENCHY'S PARK	ACCESS RAMP	27.50			ACCESS RAMP	25.60
	MEDIAN	20.00	MEDIAN	20.00		
TOTAL		47.50		20.00		25.60
USE		48.00		20.00		26.00
CONQUISTADORA	MEDIAN	24.54	MEDIAN	20.00		
	ACCESS RAMP	15.00			ACCESS RAMP	14.00
TOTAL		39.54		20.00		14.00
USE		40.00		20.00		14.00
ALTO PARK	ACCESS RAMP	15.00			ACCESS RAMP	25.00
LA MADERA SW CORNER RAMP	ACCESS RAMP	20.00			ACCESS RAMP	25.64
TOTAL		35.00		0.00		50.64
USE		35.00		0.00		51.00
ALAMEDA AT CANDELARIO	ACCESS RAMP	30.00			ACCESS RAMP	10.00
NW CORNER CANDELARIO	ACCESS RAMP	17.60			ACCESS RAMP & CDI	29.38
NE CORNER CANDELARIO	ACCESS RAMP	24.80			ACCESS RAMP	26.05
N. SALVATION ARMY ACCESS RAMP	ACCESS RAMP	21.00			ACCESS RAMP	21.00
S. SALVATION ARMY ACCESS RAMP	ACCESS RAMP				ACCESS RAMP	16.00
CANDELARIO MEDIAN ISLAND	MEDIAN	14.00		106.80		
SALVATION ARMY MEDIAN ISLAND	MEDIAN			92.30		
CAMINO DEL CAMPO	MEDIAN			106.20		
CAMINO DEL CAMPO	ACCESS RAMP				ACCESS RAMP	20.30
TOTAL		107.40		305.30		122.73
USE		108.00		306.00		123.00
	TOTAL	231.00	TOTAL	306.00	TOTAL	214.00
	USE	235.00	USE	310.00	USE	214.00

EARTHWORK SUMMARY

LOC	203000 UNCLASSIFIED EXCAVATION	EMBANKMENT	SHRINK (20%)	203100 BORROW
	CU YD	CU YD	CU YD	CU YD
CONQUISTADORA	170	0	0	-170.0
ALTO PARK	2.1	565	113	675.9
TOTALS	172	565	113	506
USE	180			510

WALL	667309 RECYCLED CONCRETE WALL	
DESCRIPTION	LOC	SF
CONQUISTADORA	STATION 200+70 TO 201+03	150.00
ALAMEDA	STATION 402+50 TO 404+90	400.00
	TOTAL	550.00
	USE	550.00

SEEDING	632000 CLASS A SEEDING		603100 TEMP SOIL STABILANT	667XXX AMENDED SOIL
DESCRIPTION	SF	AC	AC	CY
FRENCHY'S PARK	4100	0.094	0.113	
CONQUISTADORA	177	0.004	0.005	
ALTO PARK	1085	0.025	0.030	
ALAMEDA MEDIANS	75	0.002	0.002	31.250
	TOTAL	0.125	0.150	31.250
	USE	0.130	0.150	32.000

601000 - REMOVALS OF STRUCTURES AND OBSTRUCTIONS

DESCRIPTION	QTY	UNIT
FRENCHY'S PARK - REMOVE EXISTING BOLLARDS	2	EA
FRENCHY'S PARK - REMOVE EXISTING FENCE AT NEW OPENING	20	LF
FRENCHY'S - MEDIAN/CONCRETE REMOVALS	12	SY
CONQUISTADORA - MEDIAN/CONCRETE REMOVALS	30	SY
ALTO - MEDIAN/CONCRETE REMOVALS	20	SY
ALAMEDA - CONCRETE SIDEWALK REMOVALS (BOP - 406+46)	500	SY
ALAMEDA - CONCRETE SIDEWALK REMOVALS (406+76 - 416+15)	630	SY
ALAMEDA - CONCRETE SIDEWALK REMOVALS (416+55 - EOP)	350	SY
ALAMEDA - REMOVAL OF INLET	1	EA

601110 - REMOVALS OF SURFACING

DESCRIPTION	QTY (SY)
ALAMEDA - STA 414+00 MEDIAN	60.88
ALAMEDA - STA 416+60 MEDIAN	62.22
ALAMEDA - STA 421+50 MEDIAN	60
ALAMEDA - STA 413+25 CDI	8.5
TOTAL	191.6
USE	200

JEANETTE A. WALTHER NEW MEXICO 11243 REGISTERED PROFESSIONAL ENGINEER 10/21/14

No.	Date	REVISIONS	By

Designed By: JAW DATE: 07/2014
Drawn By: LAH DATE: 07/2014
Checked By: JAW DATE: 07/2014

Bohannan Huston
www.bhinc.com 800.877.5332

CITY OF SANTA FE
SANTA FE RIVER TRAIL
CONNECTIONS AND IMPROVEMENTS, PHASE 1
CAMINO DE CHELLY / AGUA FRIA TO CAMINO DEL CAMPO

MISCELLANEOUS QUANTITIES

CN: S100280

Sheet 2-3

P:\20140268\TRANS\Design\Plan Production\Plans\20140268-MiscQuan.dwg
Thu, 13-Nov-2014 - 12:55:pm, Plotted by: LAHINDE

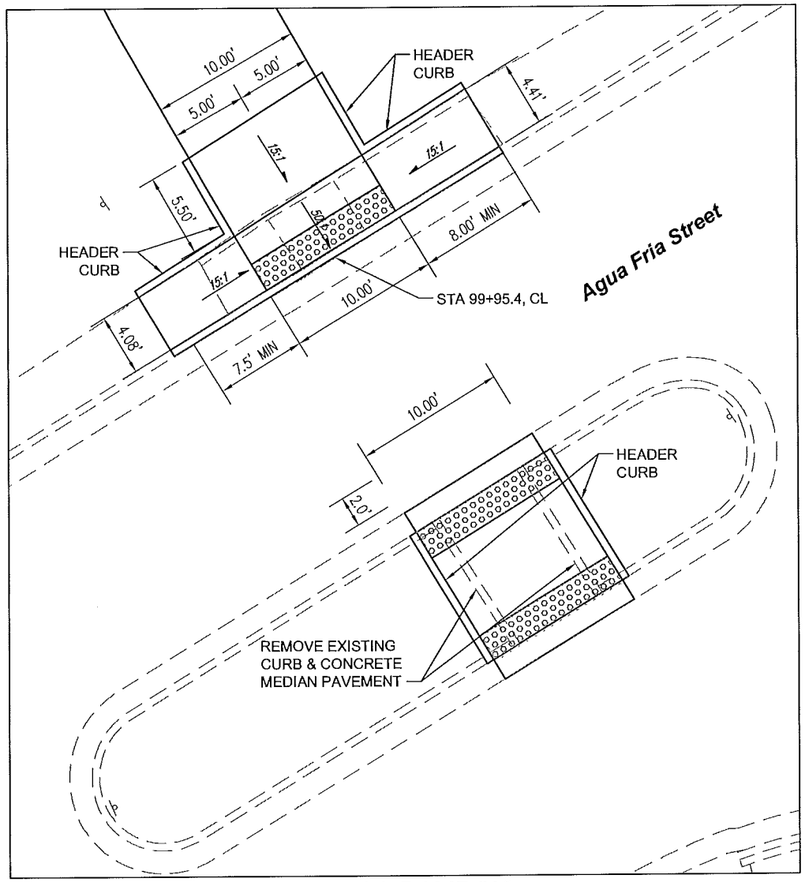

ACCESS RAMP "A"

SCALE: 1"=10'

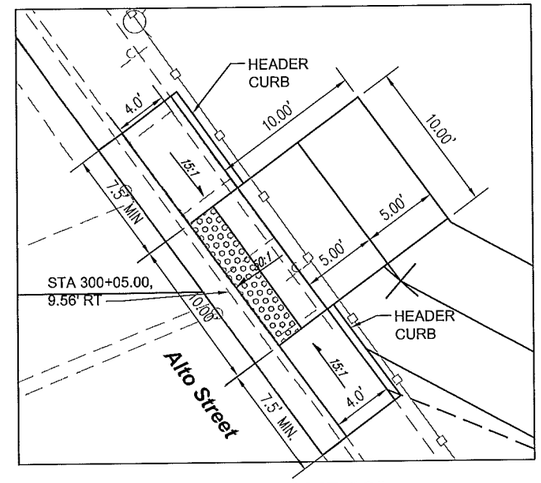

ACCESS RAMP "C"

SCALE: 1"=10'

NOTES

1. HEADER CURB TO BE CONSTRUCTED PER APWA STD DWG 2415B, SHEET 2-16.

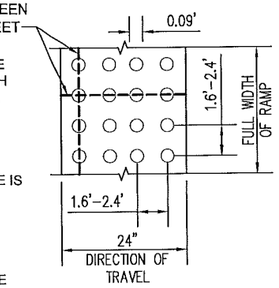

NOTES

1. DETECTABLE WARNING SURFACE SHALL CONTRAST VISUALLY WITH SIDEWALK AND CURB & GUTTER.
2. SEE www.access-board.gov FOR ADDITIONAL REQUIREMENTS.
3. DETECTABLE WARNING SURFACE IS INCIDENTAL TO THE SIDEWALK.
4. SURFACE APPLIED DETECTABLE WARNING SURFACE IS NOT PERMITTED. EMBED WET SET DETECTABLE WARNING SURFACE ONLY

DETECTABLE WARNING SURFACE

NTS

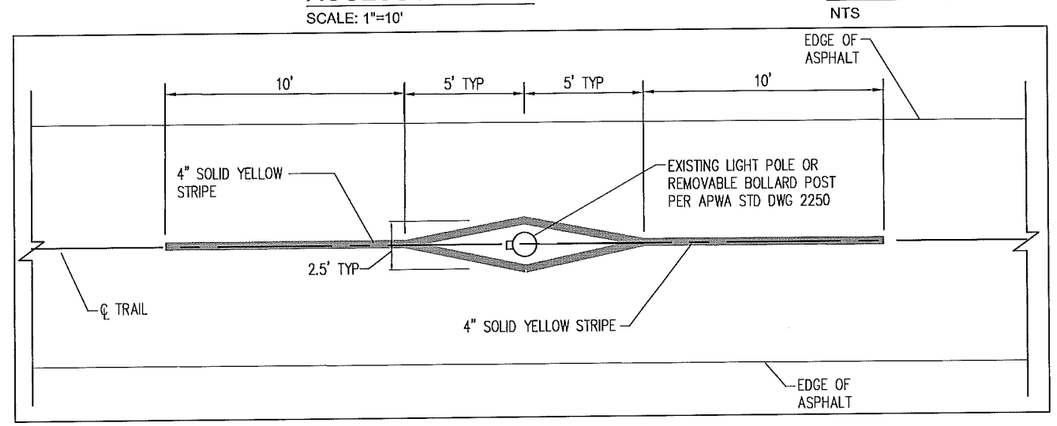

TYPICAL TRAIL STRIPING & REMOVABLE BOLLARD DETAIL

SCALE: 1"=10'

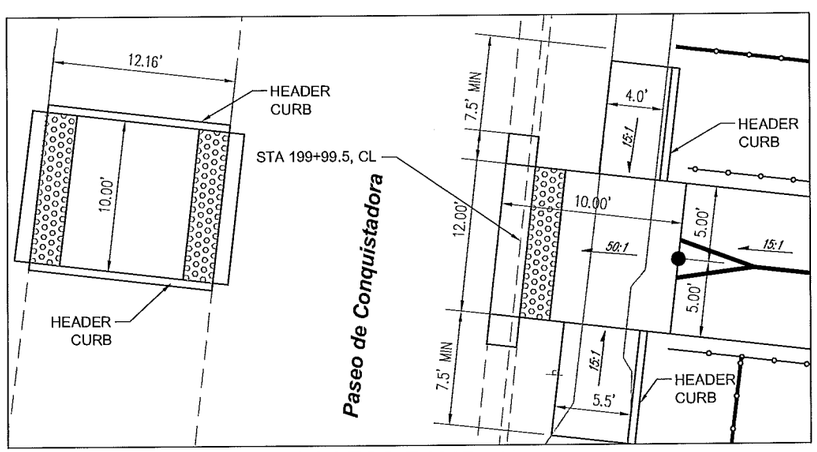

ACCESS RAMP "B"

SCALE: 1"=10'

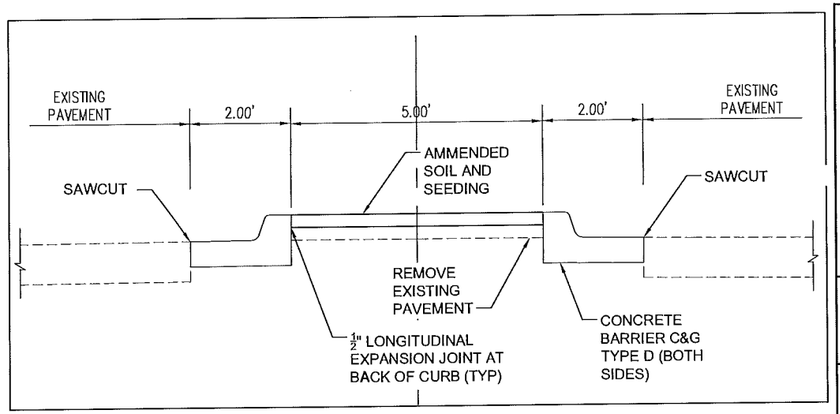

MEDIAN ISLAND TYPICAL SECTION

NTS

JEANETTE A. WALTHER
NEW MEXICO
11243
REGISTERED PROFESSIONAL ENGINEER
10/21/14

No.	Date	REVISIONS	By

Designed By:	JAW	DATE: 07/2014
Drawn By:	LAH	DATE: 07/2014
Checked By:	JAW	DATE: 07/2014

Bohannan Huston
www.bhinc.com 800.877.5332

CITY OF SANTA FE

SANTA FE RIVER TRAIL
CONNECTIONS AND IMPROVEMENTS, PHASE 1
CAMINO DE CHELLY / AGUA FRIA TO CAMINO DEL CAMPO

MISCELLANEOUS DETAILS

CN: S100280

Sheet 2-4

P:\20140268\TRANS\Design\Plan Production\Plans\20140268-Ramps.dwg
Thu, 13-Nov-2014 - 12:56:pm, Plotted by: LAHINDE

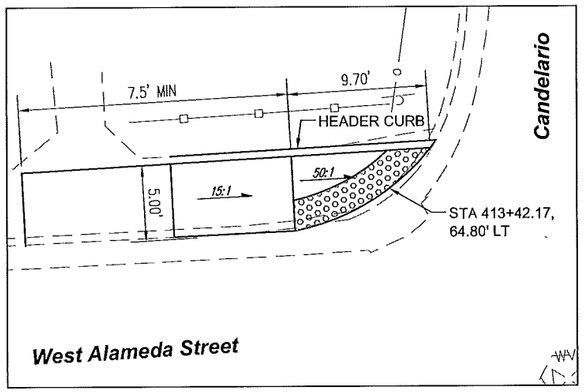

ACCESS RAMP "D"

SCALE: 1"=10'

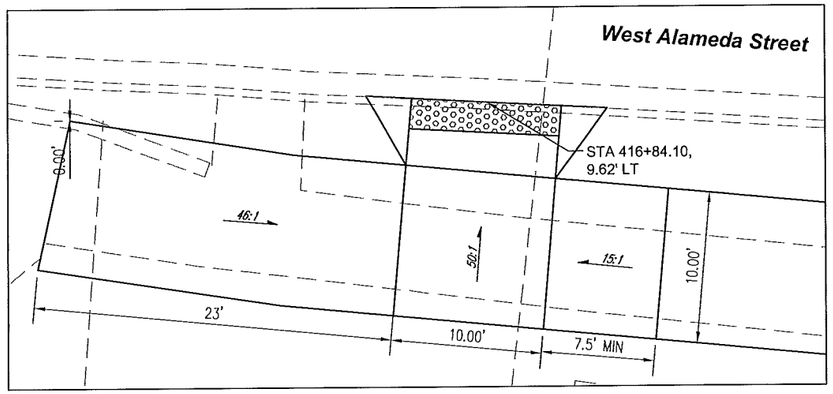

ACCESS RAMP "G"

SCALE: 1"=10'

LINES SHALL BE PERPENDICULAR TO THE GRADE BREAK BETWEEN RAMP & STREET

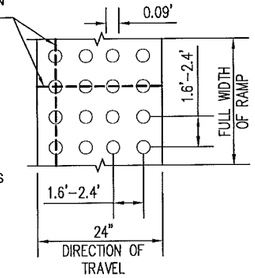

NOTES

1. DETECTABLE WARNING SURFACE SHALL CONTRAST VISUALLY WITH SIDEWALK AND CURB & GUTTER.
2. SEE www.access-board.gov FOR ADDITIONAL REQUIREMENTS.
3. DETECTABLE WARNING SURFACE IS INCIDENTAL TO THE SIDEWALK.
4. SURFACE APPLIED DETECTABLE WARNING SURFACE IS NOT PERMITTED. EMBED WET SET DETECTABLE WARNING SURFACE ONLY

DETECTABLE WARNING SURFACE

NTS

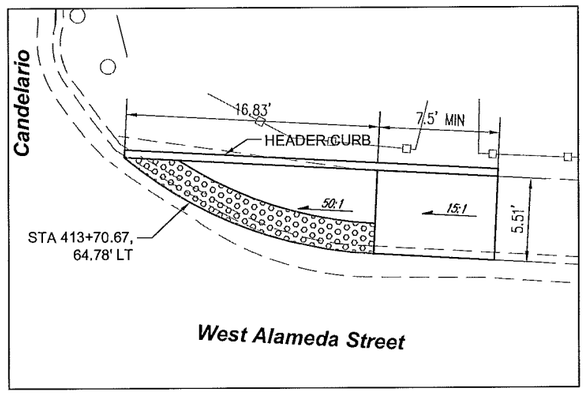

ACCESS RAMP "E"

SCALE: 1"=10'

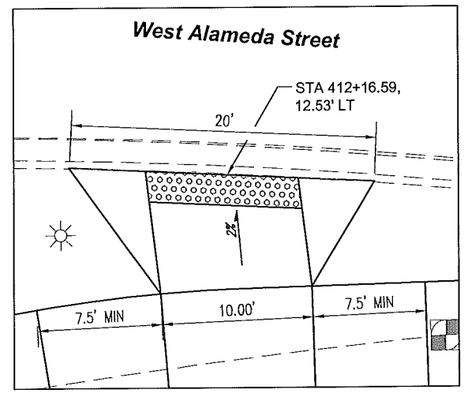

ACCESS RAMP "H"

SCALE: 1"=10'

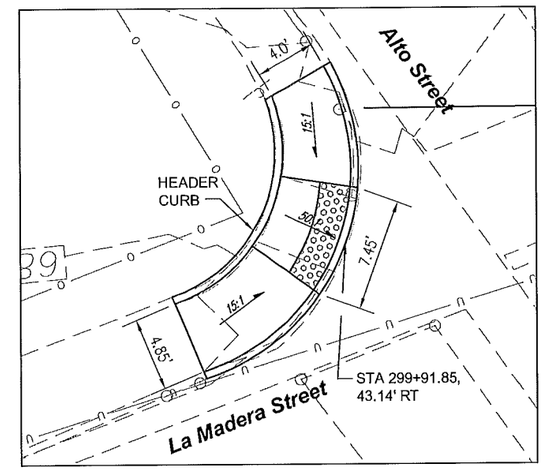

ACCESS RAMP "K"

SCALE: 1"=10'

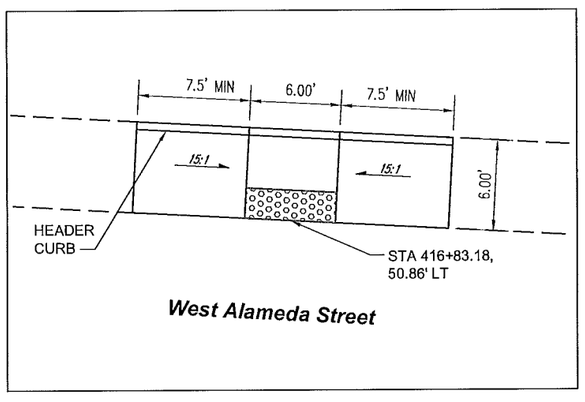

ACCESS RAMP "F"

SCALE: 1"=10'

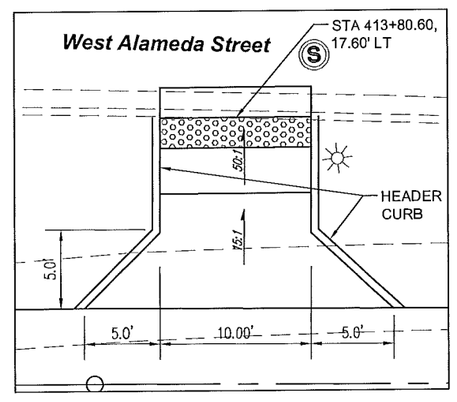

ACCESS RAMP "J"

SCALE: 1"=10'

JEANETTE A. WALTHER
NEW MEXICO
11243
REGISTERED PROFESSIONAL ENGINEER
10/21/14

No.	Date	REVISIONS	By

Designed By:	JAW	DATE: 07/2014
Drawn By:	LAH	DATE: 07/2014
Checked By:	JAW	DATE: 07/2014

Bohannan Huston
www.bhinc.com 800.877.5332

CITY OF SANTA FE

SANTA FE RIVER TRAIL
CONNECTIONS AND IMPROVEMENTS, PHASE 1
CAMINO DE CHELLY / AGUA FRIA TO CAMINO DEL CAMPO

MISCELLANEOUS DETAILS

CN: S100280

Sheet 2-5

P:\20140268\TRANS\Design\Plan Production\Plans\20140268-Ramps.dwg
Thu, 13-Nov-2014 - 12:56:pm, Plotted by: LAHINDE

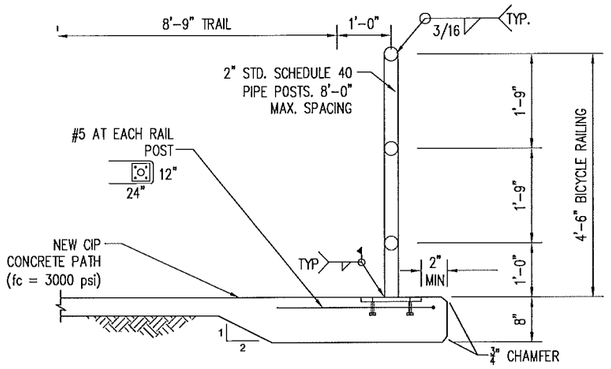

TYPICAL SECTION

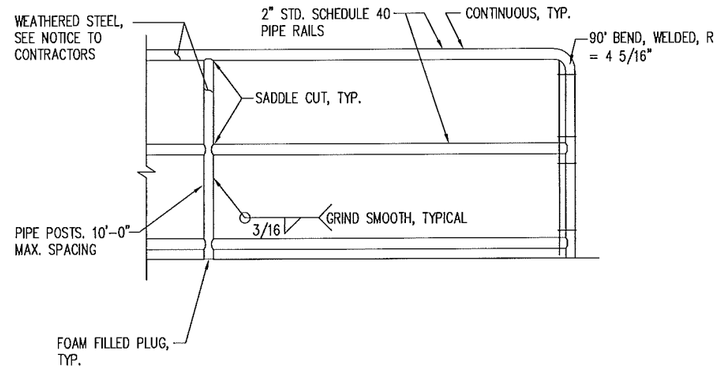

TYPICAL FRAME ELVEVATION

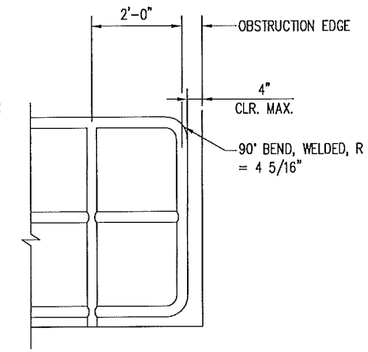

TYPICAL END FRAME

TYPICAL PIPE RAIL MOUNTED ON CONCRETE WALL

NTS

No.	Date	REVISIONS	By

Designed By:	JAW	DATE: 07/2014
Drawn By:	LAH	DATE: 07/2014
Checked By:	JAW	DATE: 07/2014

JEANETTE A. WALTHER
NEW MEXICO
11243
10/21/14
REGISTERED PROFESSIONAL ENGINEER

Bohannan Huston
www.bhinc.com 800.877.5332

CITY OF SANTA FE

SANTA FE RIVER TRAIL
CONNECTIONS AND IMPROVEMENTS, PHASE 1
CAMINO DE CHELLY / AGUA FRIA TO CAMINO DEL CAMPO

MISCELLANEOUS DETAILS

CN: S100280

Sheet 2-6

P:\20140268\TRANS\Design\Plan Production\Plans\20140268-MiscDet.dwg
Thu, 13-Nov-2014 - 12:56:pm, Plotted by: LAHINDE

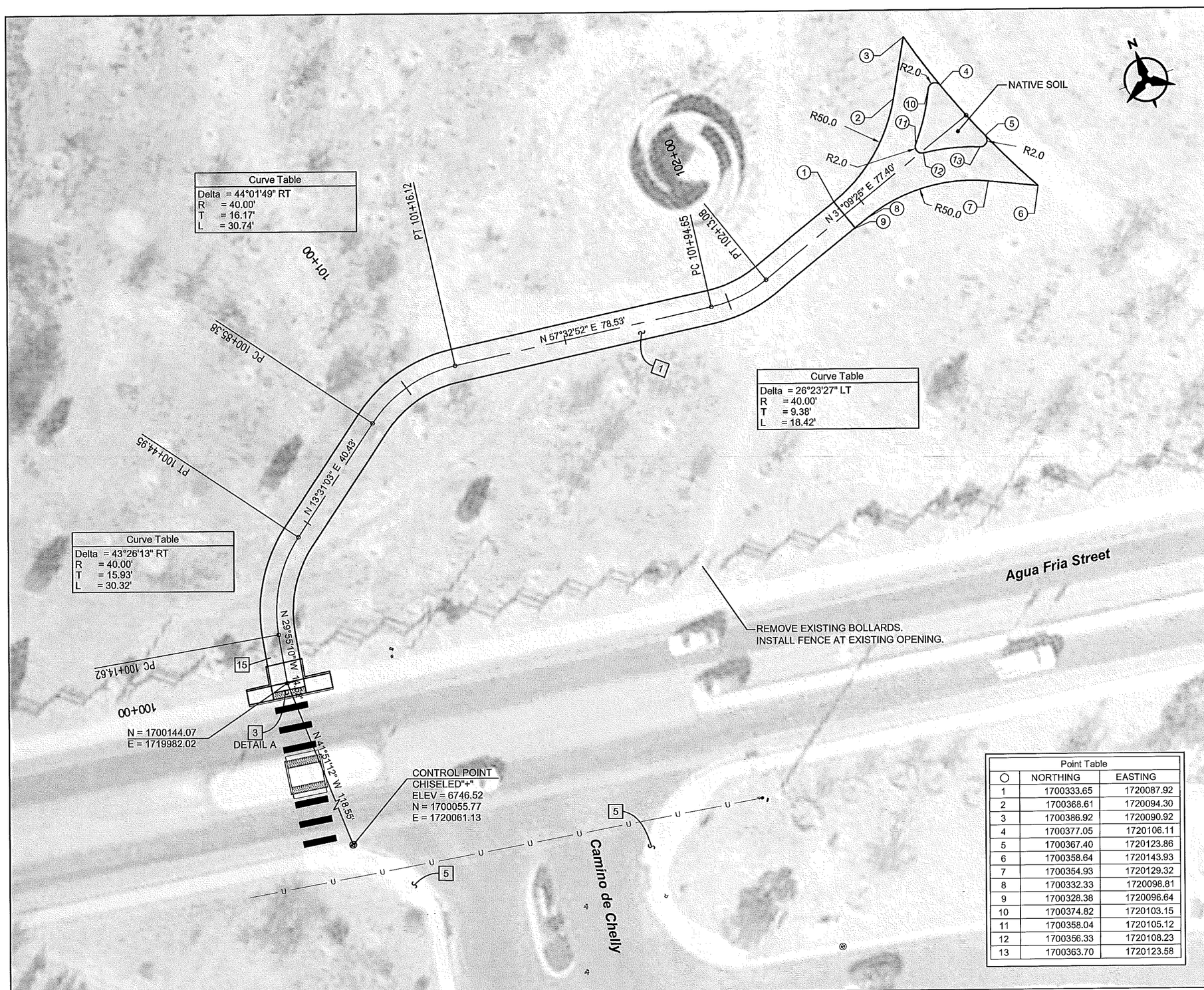

Point Table		
○	NORTHING	EASTING
1	1700333.65	1720087.92
2	1700368.61	1720094.30
3	1700386.92	1720090.92
4	1700377.05	1720106.11
5	1700367.40	1720123.86
6	1700358.64	1720143.93
7	1700354.93	1720129.32
8	1700332.33	1720098.81
9	1700328.38	1720096.64
10	1700374.82	1720103.15
11	1700358.04	1720105.12
12	1700356.33	1720108.23
13	1700363.70	1720123.58

KEYED NOTES

1. BUILD 10' WIDE 4" CONCRETE SIDEWALK. SEE SHT. 2-1 FOR COLOR
2. REMOVE EXISTING SIDEWALK
3. BUILD WHEELCHAIR RAMP PER DETAIL, SHEETS 2-4 AND 2-5
4. BUILD RECYCLED CONCRETE WALL, SEE SHT 2-1 FOR DETAILS
5. EXISTING WHEELCHAIR RAMP TO REMAIN
6. BUILD CONCRETE BARRIER CURB & GUTTER, TYPE "D" PER NMDOT STD DWG 609-01-1/1.
7. PAINT MEDIAN NOSE YELLOW, INCIDENTAL TO BID ITEM 609418 CONCRETE VERTICAL CURB AND GUTTER 6"X18".
8. FILL MEDIANS WITH AMENDED SOIL AND INSTALL CLASS A SEEDING
9. SEE SHEET 10-1 FOR STORM DRAIN IMPROVEMENTS
10. EXISTING SIDEWALK TO REMAIN
11. BUILD RAILING PER NMDOT STD DRWG 607-20-1/4 THRU 3/4
12. BUILD 6' WIDE 4" BROWN CONCRETE SIDEWALK
13. BUILD HEADER CURB PER APWA STD DRWG 2415B
14. REMOVE BRICK AT NEW MEDIAN OPENING AND RESET AT BACK OF HEADER CURB. THIS SHALL BE CONSIDERED INCIDENTAL TO THE UNIT BID PRICE FOR THE HEADER CURB.
15. REMOVE EXISTING FENCE AT NEW OPENING
16. BUILD CEDAR RAIL FENCE PER MANUFACTURER'S RECOMMENDATIONS
17. REMOVE EXISTING CABLE AND REPLACE ON BOTH SIDES OF OPENING
18. CITY OF SANTA FE WILL CONTRACT WITH PNM TO RELOCATE LIGHTS PRIOR TO CONSTRUCTION
19. INSTALL REMOVABLE POST PER APWA STD DWG 2250, PAINTED YELLOW. STRIPE PER DETAIL SHEET 2-4.
20. CITY OF SANTA FE WILL COORDINATE WITH PNM TO REMOVE EXISTING POLE PRIOR TO CONSTRUCTION
21. REMOVE EXISTING TREE, INCLUDED IN CLEARING AND GRUBBING
22. SEE SHEET 7-1 THRU 7-3 FOR DETAILS
23. INSTALL COMPOST MULCH SOCK
24. SQUARE OFF SIDEWALK WHEN DISTANCE TO CURB IS LESS THAN 2'

0 15 30 60
SCALE IN FEET

JEANETTE A. WALTHER
NEW MEXICO
11243
REGISTERED PROFESSIONAL ENGINEER
10/21/14

No.	Date	REVISIONS	By

Designed By: JAW DATE: 07/2014
Drawn By: LAH DATE: 07/2014
Checked By: JAW DATE: 07/2014

Bohannan Huston
www.bhinc.com 800.877.5332

CITY OF SANTA FE
SANTA FE RIVER TRAIL
CONNECTIONS AND IMPROVEMENTS, PHASE 1
CAMINO DE CHELLY / AGUA FRIA TO CAMINO DEL CAMPO

FRENCHY'S PARK

CN: S100280

Sheet 3-1

P:\20140268\TRANS\Design\Plan Production\Plans\20140268-Plan Sheets.dwg
Thu, 13-Nov-2014 - 12:57:pm, Plotted by: LAHINDE

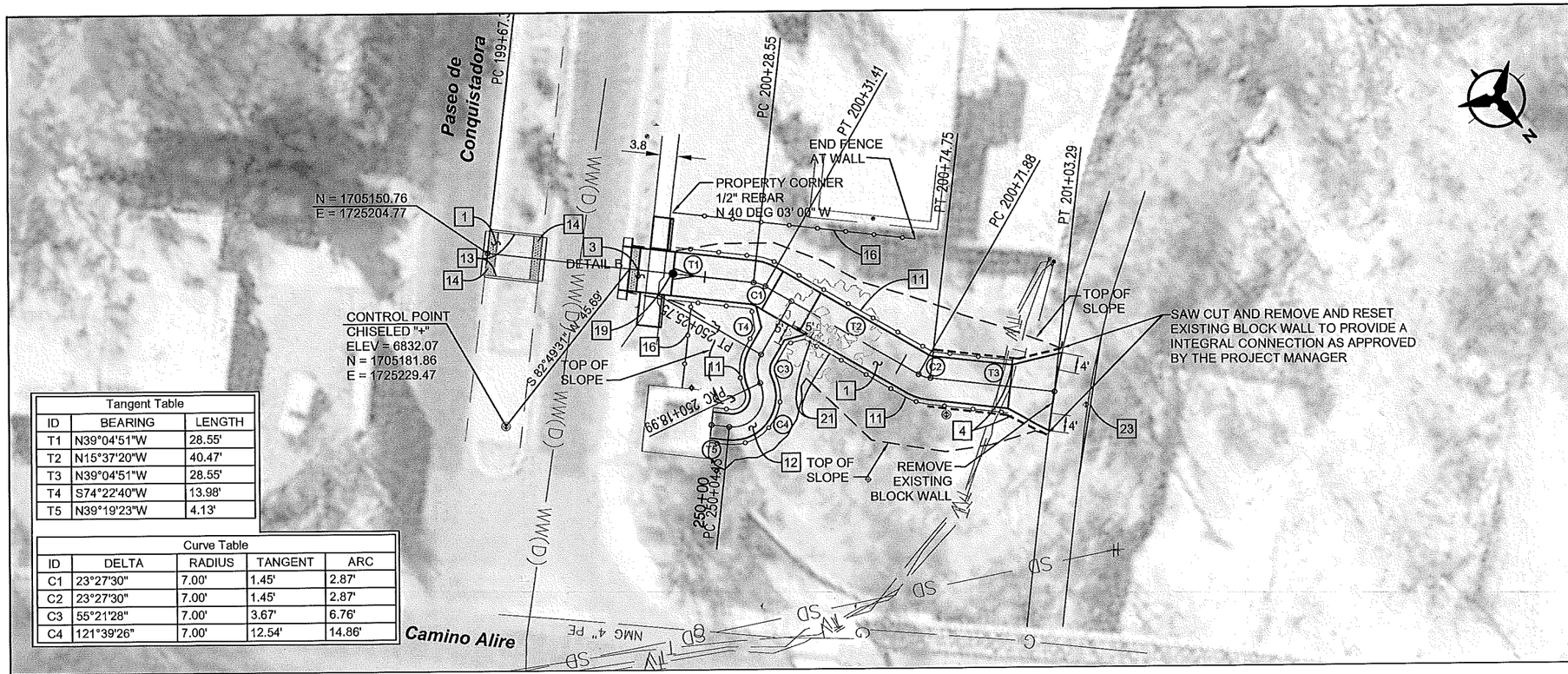

Tangent Table		
ID	BEARING	LENGTH
T1	N39°04'51"W	28.55'
T2	N15°37'20"W	40.47'
T3	N39°04'51"W	28.55'
T4	S74°22'40"W	13.98'
T5	N39°19'23"W	4.13'

Curve Table				
ID	DELTA	RADIUS	TANGENT	ARC
C1	23°27'30"	7.00'	1.45'	2.87'
C2	23°27'30"	7.00'	1.45'	2.87'
C3	55°21'28"	7.00'	3.67'	6.76'
C4	121°39'26"	7.00'	12.54'	14.86'

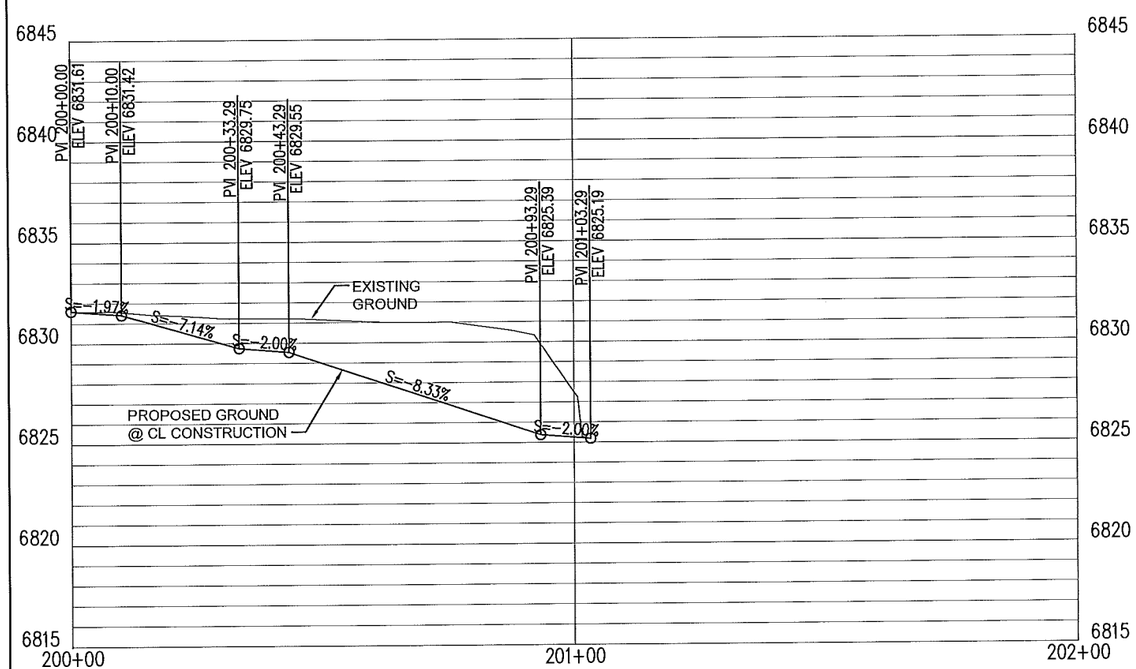

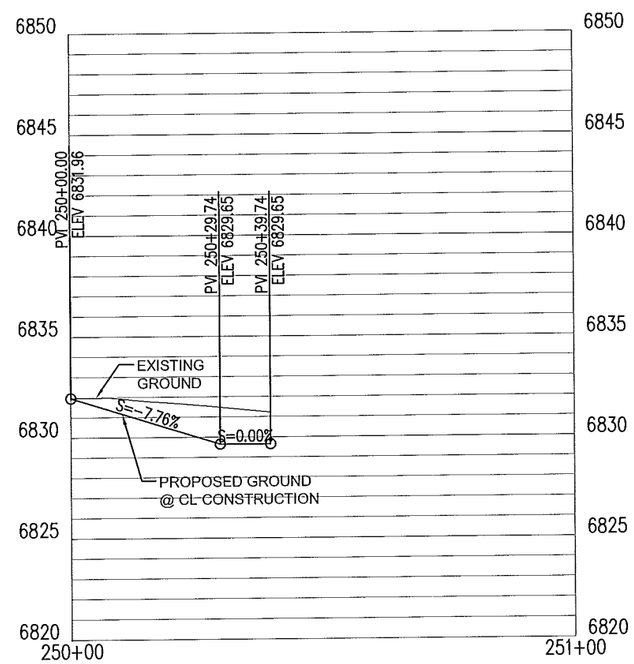

P:\20140268\TRANS\Design\Plan Production\Plans\20140268-Plan Sheets.dwg
Thu, 13-Nov-2014 - 12:57:pm, Plotted by: LAHINDE

KEYED NOTES

1. BUILD 10' WIDE 4" CONCRETE SIDEWALK. SEE SHT. 2-1 FOR COLOR
2. REMOVE EXISTING SIDEWALK
3. BUILD WHEELCHAIR RAMP PER DETAIL, SHEETS 2-4 AND 2-5
4. BUILD RECYCLED CONCRETE WALL, SEE SHT 2-1 FOR DETAILS
5. EXISTING WHEELCHAIR RAMP TO REMAIN
6. BUILD CONCRETE BARRIER CURB & GUTTER, TYPE "D" PER NMDOT STD DWG 609-01-1/1.
7. PAINT MEDIAN NOSE YELLOW, INCIDENTAL TO BID ITEM 609418 CONCRETE VERTICAL CURB AND GUTTER 6"X18".
8. FILL MEDIANS WITH AMENDED SOIL AND INSTALL CLASS A SEEDING
9. SEE SHEET 10-1 FOR STORM DRAIN IMPROVEMENTS
10. EXISTING SIDEWALK TO REMAIN
11. BUILD RAILING PER NMDOT STD DRWG 607-20-1/4 THRU 3/4
12. BUILD 6' WIDE 4" BROWN CONCRETE SIDEWALK
13. BUILD HEADER CURB PER APWA STD DRWG 2415B
14. REMOVE BRICK AT NEW MEDIAN OPENING AND RESET AT BACK OF HEADER CURB. THIS SHALL BE CONSIDERED INCIDENTAL TO THE UNIT BID PRICE FOR THE HEADER CURB.
15. REMOVE EXISTING FENCE AT NEW OPENING
16. BUILD CEDAR RAIL FENCE PER MANUFACTURER'S RECOMMENDATIONS
17. REMOVE EXISTING CABLE AND REPLACE ON BOTH SIDES OF OPENING
18. CITY OF SANTA FE WILL CONTRACT WITH PNM TO RELOCATE LIGHTS PRIOR TO CONSTRUCTION
19. INSTALL REMOVABLE POST PER APWA STD DWG 2250, PAINTED YELLOW. STRIPE PER DETAIL SHEET 2-4.
20. CITY OF SANTA FE WILL COORDINATE WITH PNM TO REMOVE EXISTING POLE PRIOR TO CONSTRUCTION
21. REMOVE EXISTING TREE, INCLUDED IN CLEARING AND GRUBBING
22. SEE SHEET 7-1 THRU 7-3 FOR DETAILS
23. INSTALL COMPOST MULCH SOCK
24. SQUARE OFF SIDEWALK WHEN DISTANCE TO CURB IS LESS THAN 2'

0 15 30 60
SCALE IN FEET

JEANETTE A. WALTHER NEW MEXICO 11243 REGISTERED PROFESSIONAL ENGINEER 10/21/14

No.	Date	REVISIONS	By

Designed By:	JAW	DATE: 07/2014
Drawn By:	LAH	DATE: 07/2014
Checked By:	JAW	DATE: 07/2014

Bohannan Huston
www.bhinc.com 800.877.5332

CITY OF SANTA FE
SANTA FE RIVER TRAIL
CONNECTIONS AND IMPROVEMENTS, PHASE 1
CAMINO DE CHELLY / AGUA FRIA TO CAMINO DEL CAMPO

CONQUISTADORA

CN: S100280

Sheet 3-2

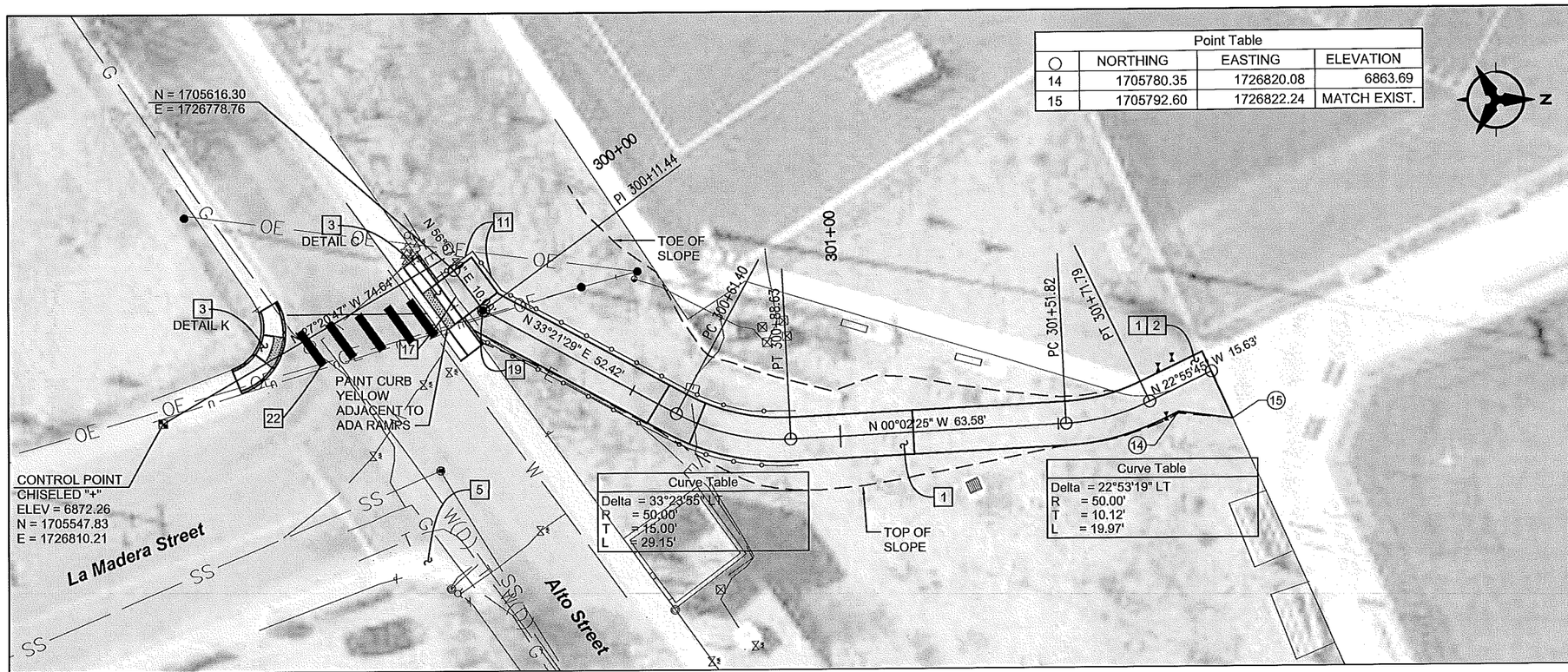

Point Table			
○	NORTHING	EASTING	ELEVATION
14	1705780.35	1726820.08	6863.69
15	1705792.60	1726822.24	MATCH EXIST.

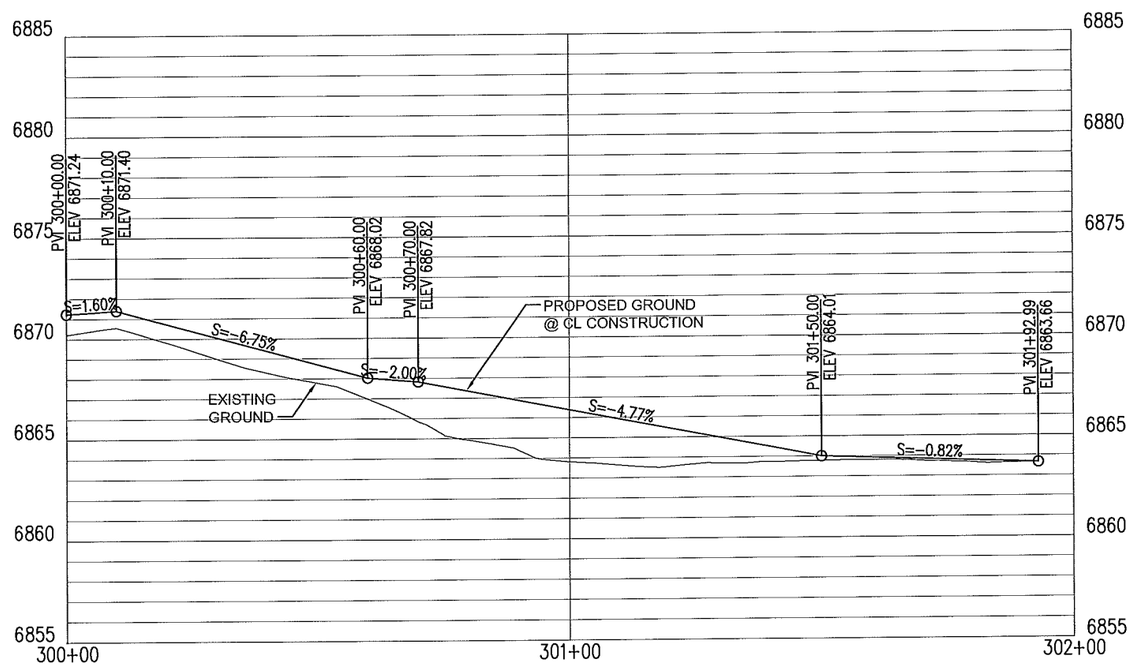

P:\20140268\TRANS\Design\Plan Production\Plans\20140268-Plan Sheets.dwg
Thu, 13-Nov-2014 - 12:58:pm, Plotted by: LAHINDE

KEYED NOTES

1. BUILD 10' WIDE 4" CONCRETE SIDEWALK. SEE SHT. 2-1 FOR COLOR
2. REMOVE EXISTING SIDEWALK
3. BUILD WHEELCHAIR RAMP PER DETAIL, SHEETS 2-4 AND 2-5
4. BUILD RECYCLED CONCRETE WALL, SEE SHT 2-1 FOR DETAILS
5. EXISTING WHEELCHAIR RAMP TO REMAIN
6. BUILD CONCRETE BARRIER CURB & GUTTER, TYPE "D" PER NMDOT STD DWG 609-01-1/1.
7. PAINT MEDIAN NOSE YELLOW, INCIDENTAL TO BID ITEM 609418 CONCRETE VERTICAL CURB AND GUTTER 6"X18".
8. FILL MEDIANS WITH AMENDED SOIL AND INSTALL CLASS A SEEDING
9. SEE SHEET 10-1 FOR STORM DRAIN IMPROVEMENTS
10. EXISTING SIDEWALK TO REMAIN
11. BUILD RAILING PER NMDOT STD DRWG 607-20-1/4 THRU 3/4
12. BUILD 6' WIDE 4" BROWN CONCRETE SIDEWALK
13. BUILD HEADER CURB PER APWA STD DRWG 2415B
14. REMOVE BRICK AT NEW MEDIAN OPENING AND RESET AT BACK OF HEADER CURB. THIS SHALL BE CONSIDERED INCIDENTAL TO THE UNIT BID PRICE FOR THE HEADER CURB.
15. REMOVE EXISTING FENCE AT NEW OPENING
16. BUILD CEDAR RAIL FENCE PER MANUFACTURER'S RECOMMENDATIONS
17. REMOVE EXISTING CABLE AND REPLACE ON BOTH SIDES OF OPENING
18. CITY OF SANTA FE WILL CONTRACT WITH PNM TO RELOCATE LIGHTS PRIOR TO CONSTRUCTION
19. INSTALL REMOVABLE POST PER APWA STD DWG 2250, PAINTED YELLOW. STRIPE PER DETAIL SHEET 2-4.
20. CITY OF SANTA FE WILL COORDINATE WITH PNM TO REMOVE EXISTING POLE PRIOR TO CONSTRUCTION
21. REMOVE EXISTING TREE, INCLUDED IN CLEARING AND GRUBBING
22. SEE SHEET 7-1 THRU 7-3 FOR DETAILS
23. INSTALL COMPOST MULCH SOCK
24. SQUARE OFF SIDEWALK WHEN DISTANCE TO CURB IS LESS THAN 2'

0 15 30 60
SCALE IN FEET

JEANETTE A. WALTHER
NEW MEXICO
11243
REGISTERED PROFESSIONAL ENGINEER
10/21/14

No.	Date	REVISIONS	By

Designed By:	JAW	DATE: 07/2014
Drawn By:	LAH	DATE: 07/2014
Checked By:	JAW	DATE: 07/2014

Bohannan Huston
www.bhinc.com 800.877.5332

CITY OF SANTA FE
SANTA FE RIVER TRAIL
CONNECTIONS AND IMPROVEMENTS, PHASE 1
CAMINO DE CHELLY / AGUA FRIA TO CAMINO DEL CAMPO

ALTO PARK

CN: S100280

Sheet 3-3

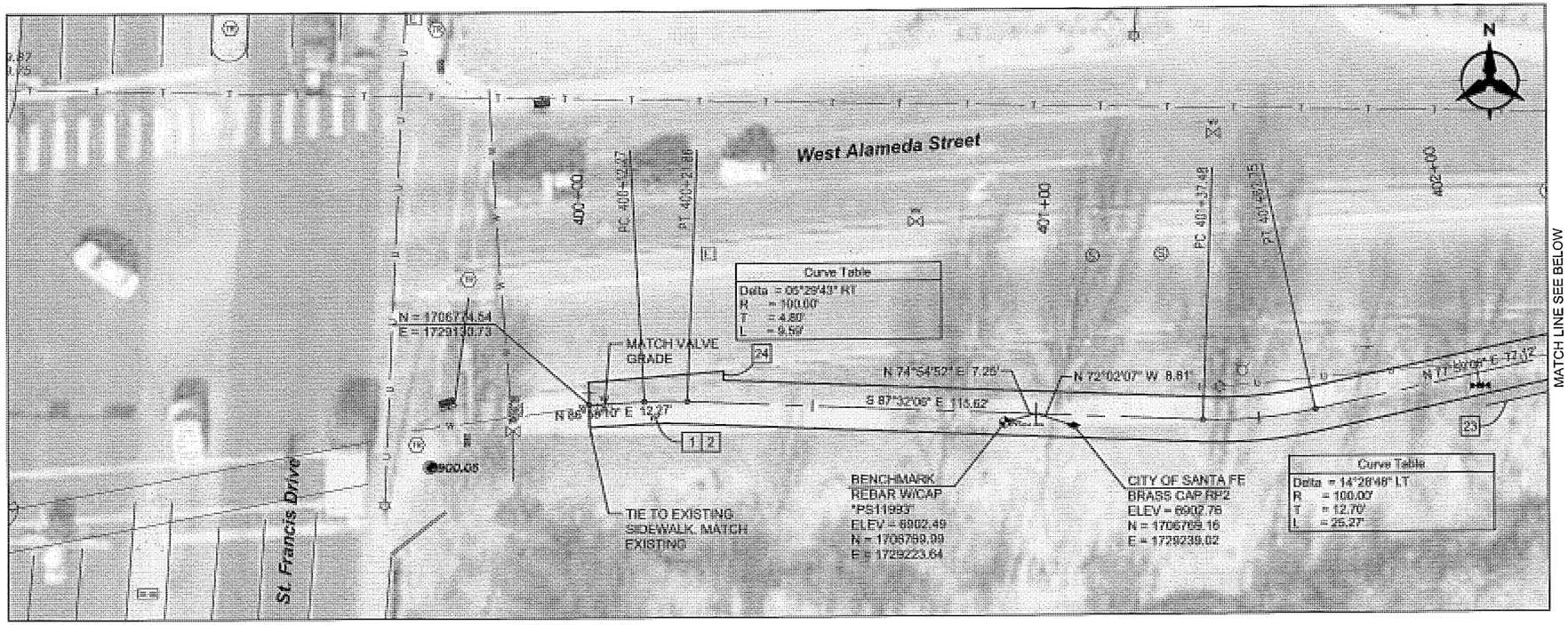

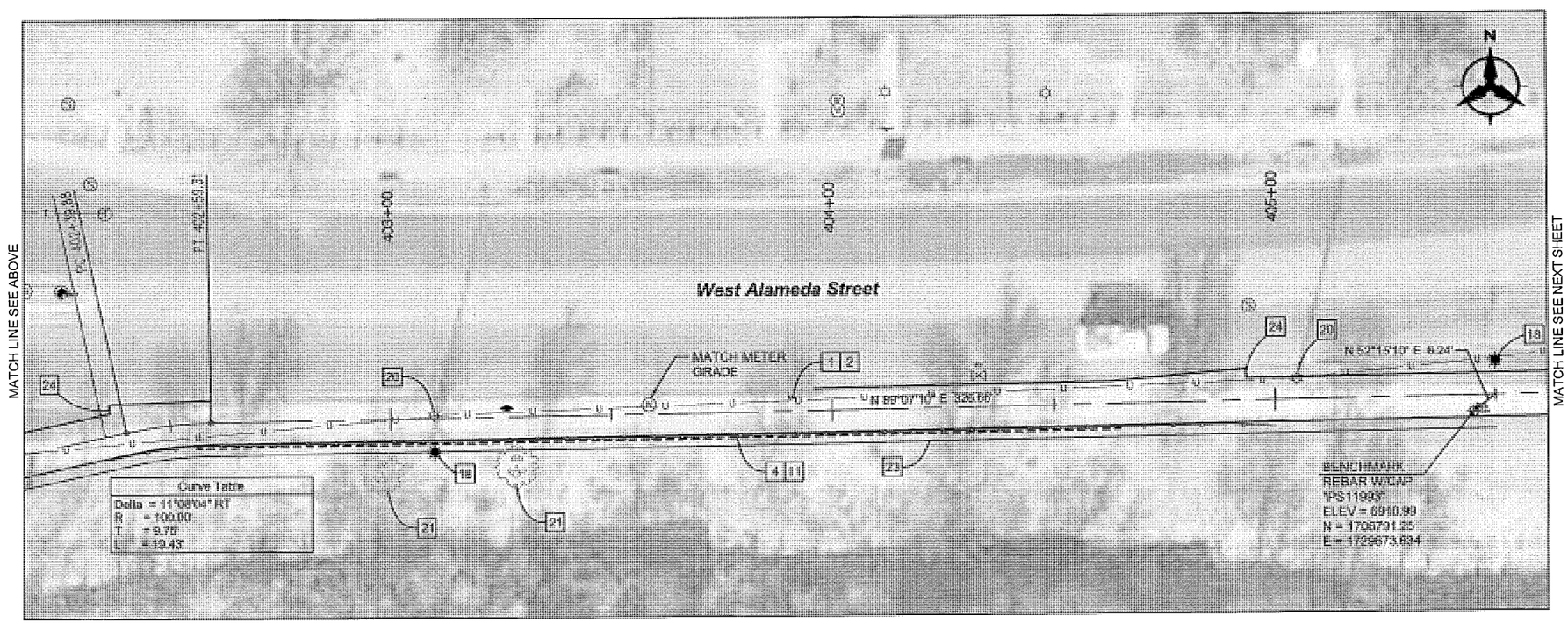

P:\20140268\TRANS\Design\Plan Production\Plans\20140268-Plan Sheets.dwg
Thu, 13-Nov-2014 - 12:56:pm, Plotted by: LAHINDE

KEYED NOTES

1. BUILD 10' WIDE 4" CONCRETE SIDEWALK. SEE SHT. 2-1 FOR COLOR
2. REMOVE EXISTING SIDEWALK
3. BUILD WHEELCHAIR RAMP PER DETAIL, SHEETS 2-4 AND 2-5
4. BUILD RECYCLED CONCRETE WALL, SEE SHT 2-1 FOR DETAILS
5. EXISTING WHEELCHAIR RAMP TO REMAIN
6. BUILD CONCRETE BARRIER CURB & GUTTER, TYPE "D" PER NMDOT STD DWG 609-01-1/1.
7. PAINT MEDIAN NOSE YELLOW, INCIDENTAL TO BID ITEM 609418 CONCRETE VERTICAL CURB AND GUTTER 6"X18".
8. FILL MEDIANS WITH AMENDED SOIL AND INSTALL CLASS A SEEDING
9. SEE SHEET 10-1 FOR STORM DRAIN IMPROVEMENTS
10. EXISTING SIDEWALK TO REMAIN
11. BUILD RAILING PER NMDOT STD DRWG 607-20-1/4 THRU 3/4
12. BUILD 6' WIDE 4" BROWN CONCRETE SIDEWALK
13. BUILD HEADER CURB PER APWA STD DRWG 2415B
14. REMOVE BRICK AT NEW MEDIAN OPENING AND RESET AT BACK OF HEADER CURB. THIS SHALL BE CONSIDERED INCIDENTAL TO THE UNIT BID PRICE FOR THE HEADER CURB.
15. REMOVE EXISTING FENCE AT NEW OPENING
16. BUILD CEDAR RAIL FENCE PER MANUFACTURER'S RECOMMENDATIONS
17. REMOVE EXISTING CABLE AND REPLACE ON BOTH SIDES OF OPENING
18. CITY OF SANTA FE WILL CONTRACT WITH PNM TO RELOCATE LIGHTS PRIOR TO CONSTRUCTION
19. INSTALL REMOVABLE POST PER APWA STD DWG 2250, PAINTED YELLOW. STRIPE PER DETAIL SHEET 2-4.
20. CITY OF SANTA FE WILL COORDINATE WITH PNM TO REMOVE EXISTING POLE PRIOR TO CONSTRUCTION
21. REMOVE EXISTING TREE, INCLUDED IN CLEARING AND GRUBBING
22. SEE SHEET 7-1 THRU 7-3 FOR DETAILS
23. INSTALL COMPOST MULCH SOCK
24. SQUARE OFF SIDEWALK WHEN DISTANCE TO CURB IS LESS THAN 2'

0 15 30 60
SCALE IN FEET

JEANETTE A. WALTHER
NEW MEXICO
11243
10/21/14
REGISTERED PROFESSIONAL ENGINEER

No.	Date	REVISIONS	By

Designed By:	JAW	DATE: 07/2014
Drawn By:	LAH	DATE: 07/2014
Checked By:	JAW	DATE: 07/2014

Bohannan Huston
www.bhinc.com 800.877.5332

CITY OF SANTA FE

SANTA FE RIVER TRAIL
CONNECTIONS AND IMPROVEMENTS, PHASE 1
CAMINO DE CHELLY / AGUA FRIA TO CAMINO DEL CAMPO

WEST ALAMEDA

CN: S100280

Sheet 3-4

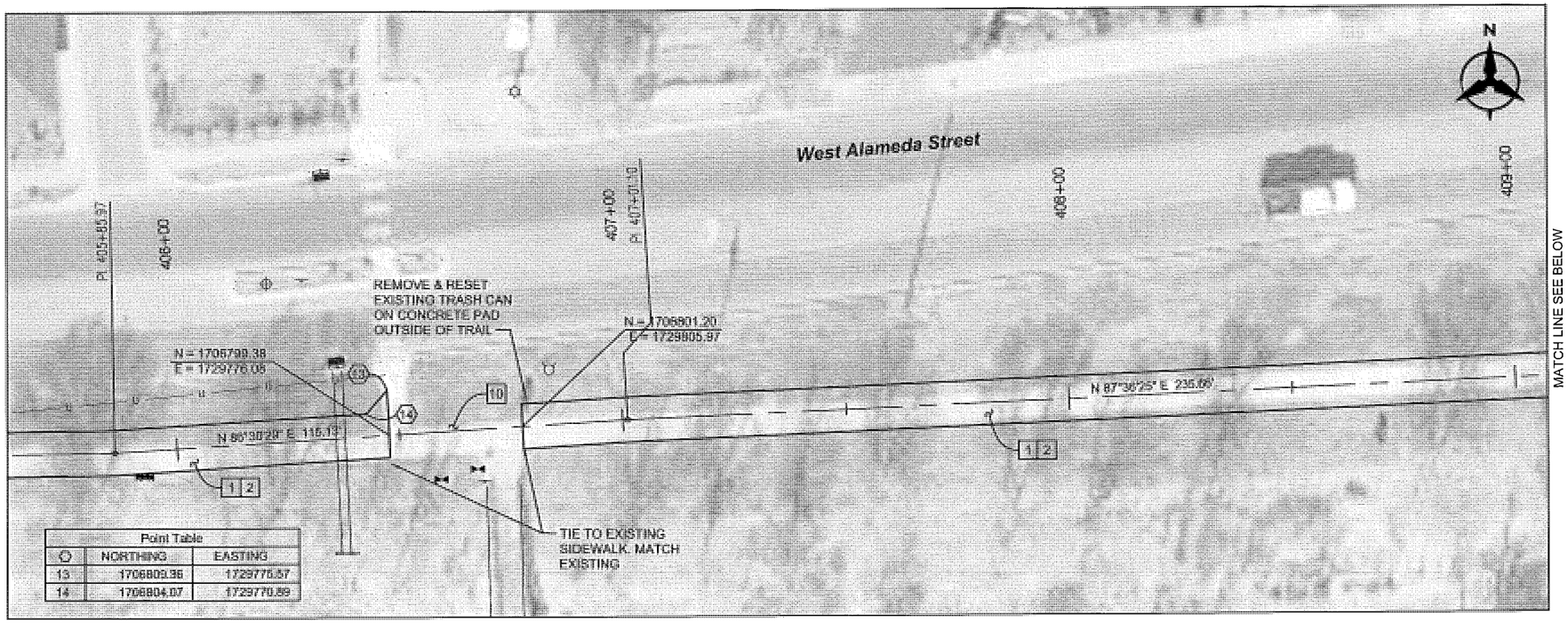

Point Table		
O	NORTHING	EASTING
13	1706809.36	1729775.57
14	1706804.07	1729770.89

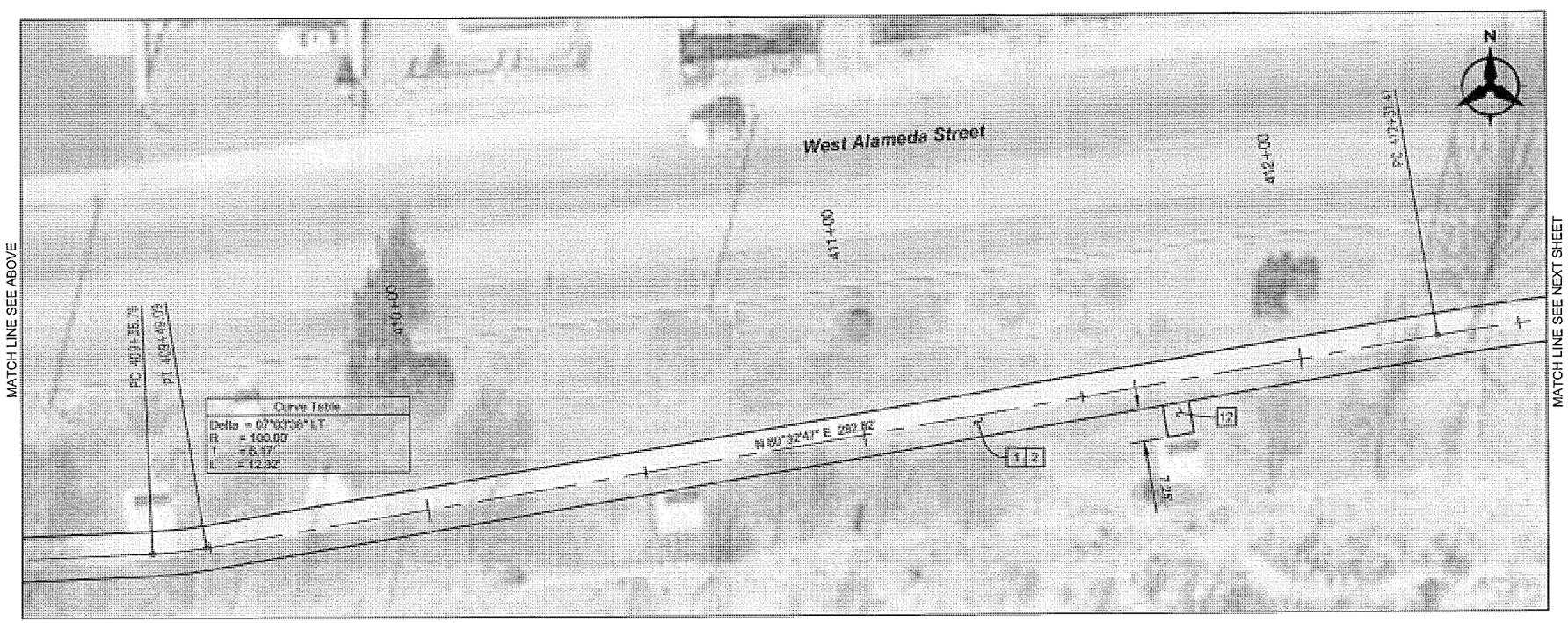

Curve Table
Delta = 07°00'38" LT
R = 100.00'
T = 6.17'
L = 12.32'

KEYED NOTES

1. BUILD 10' WIDE 4" CONCRETE SIDEWALK. SEE SHT. 2-1 FOR COLOR
2. REMOVE EXISTING SIDEWALK
3. BUILD WHEELCHAIR RAMP PER DETAIL, SHEETS 2-4 AND 2-5
4. BUILD RECYCLED CONCRETE WALL, SEE SHT 2-1 FOR DETAILS
5. EXISTING WHEELCHAIR RAMP TO REMAIN
6. BUILD CONCRETE BARRIER CURB & GUTTER, TYPE "D" PER NMDOT STD DWG 609-01-1/1.
7. PAINT MEDIAN NOSE YELLOW, INCIDENTAL TO BID ITEM 609418 CONCRETE VERTICAL CURB AND GUTTER 6"X18".
8. FILL MEDIANS WITH AMENDED SOIL AND INSTALL CLASS A SEEDING
9. SEE SHEET 10-1 FOR STORM DRAIN IMPROVEMENTS
10. EXISTING SIDEWALK TO REMAIN
11. BUILD RAILING PER NMDOT STD DRWG 607-20-1/4 THRU 3/4
12. BUILD 6' WIDE 4" BROWN CONCRETE SIDEWALK
13. BUILD HEADER CURB PER APWA STD DRWG 2415B
14. REMOVE BRICK AT NEW MEDIAN OPENING AND RESET AT BACK OF HEADER CURB. THIS SHALL BE CONSIDERED INCIDENTAL TO THE UNIT BID PRICE FOR THE HEADER CURB.
15. REMOVE EXISTING FENCE AT NEW OPENING
16. BUILD CEDAR RAIL FENCE PER MANUFACTURER'S RECOMMENDATIONS
17. REMOVE EXISTING CABLE AND REPLACE ON BOTH SIDES OF OPENING
18. CITY OF SANTA FE WILL CONTRACT WITH PNM TO RELOCATE LIGHTS PRIOR TO CONSTRUCTION
19. INSTALL REMOVABLE POST PER APWA STD DWG 2250, PAINTED YELLOW. STRIPE PER DETAIL SHEET 2-4.
20. CITY OF SANTA FE WILL COORDINATE WITH PNM TO REMOVE EXISTING POLE PRIOR TO CONSTRUCTION
21. REMOVE EXISTING TREE, INCLUDED IN CLEARING AND GRUBBING
22. SEE SHEET 7-1 THRU 7-3 FOR DETAILS
23. INSTALL COMPOST MULCH SOCK
24. SQUARE OFF SIDEWALK WHEN DISTANCE TO CURB IS LESS THAN 2'

0 15 30 60
SCALE IN FEET

JEANETTE A. WALTHER
NEW MEXICO
11243
10/21/14
REGISTERED PROFESSIONAL ENGINEER

No.	Date	REVISIONS	By

Designed By:	JAW	DATE: 07/2014
Drawn By:	LAH	DATE: 07/2014
Checked By:	JAW	DATE: 07/2014

Bohannan Huston
www.bhinc.com 800.877.5332

CITY OF SANTA FE

SANTA FE RIVER TRAIL
CONNECTIONS AND IMPROVEMENTS, PHASE 1
CAMINO DE CHELLY / AGUA FRIA TO CAMINO DEL CAMPO

WEST ALAMEDA

CN: S100280

Sheet 3-5

P:\20140268\TRANS\Design\Plan Production\Plans\20140268-Plan Sheets.dwg
Thu, 13-Nov-2014 - 12:58:pm, Plotted by: LAHINOE

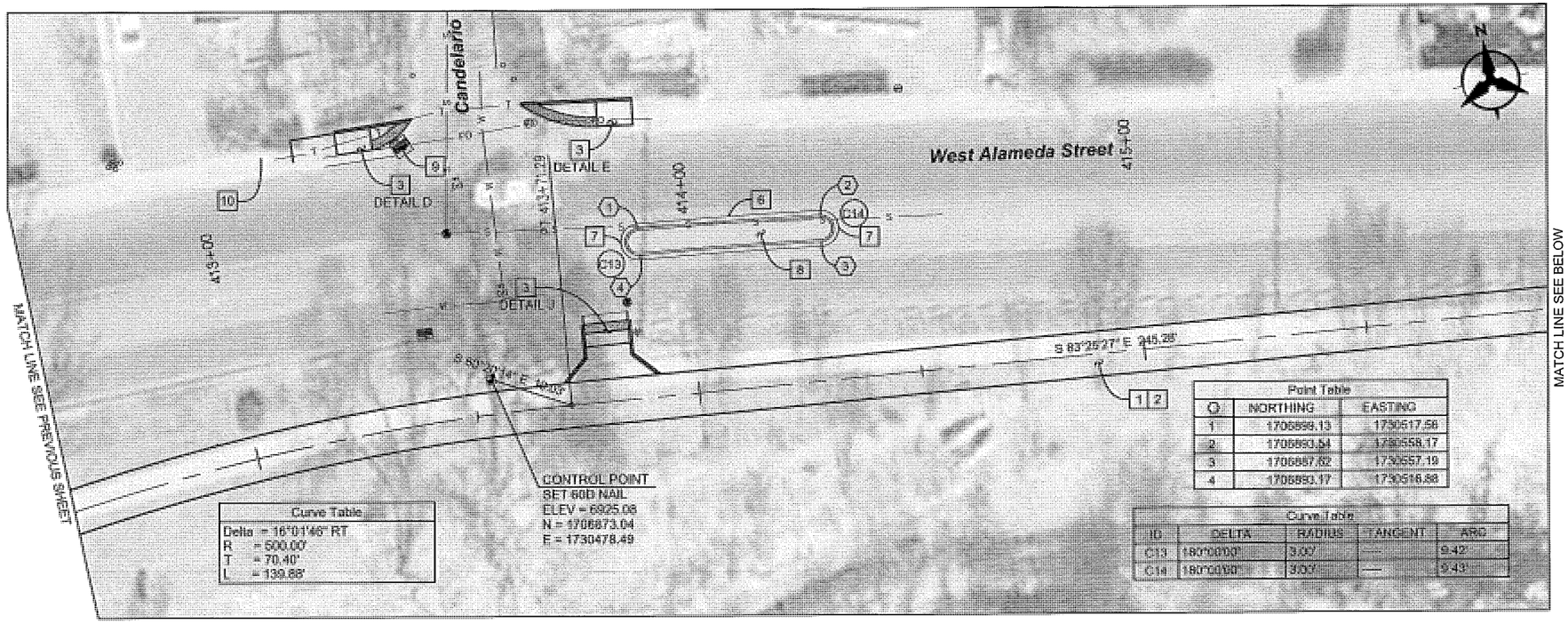

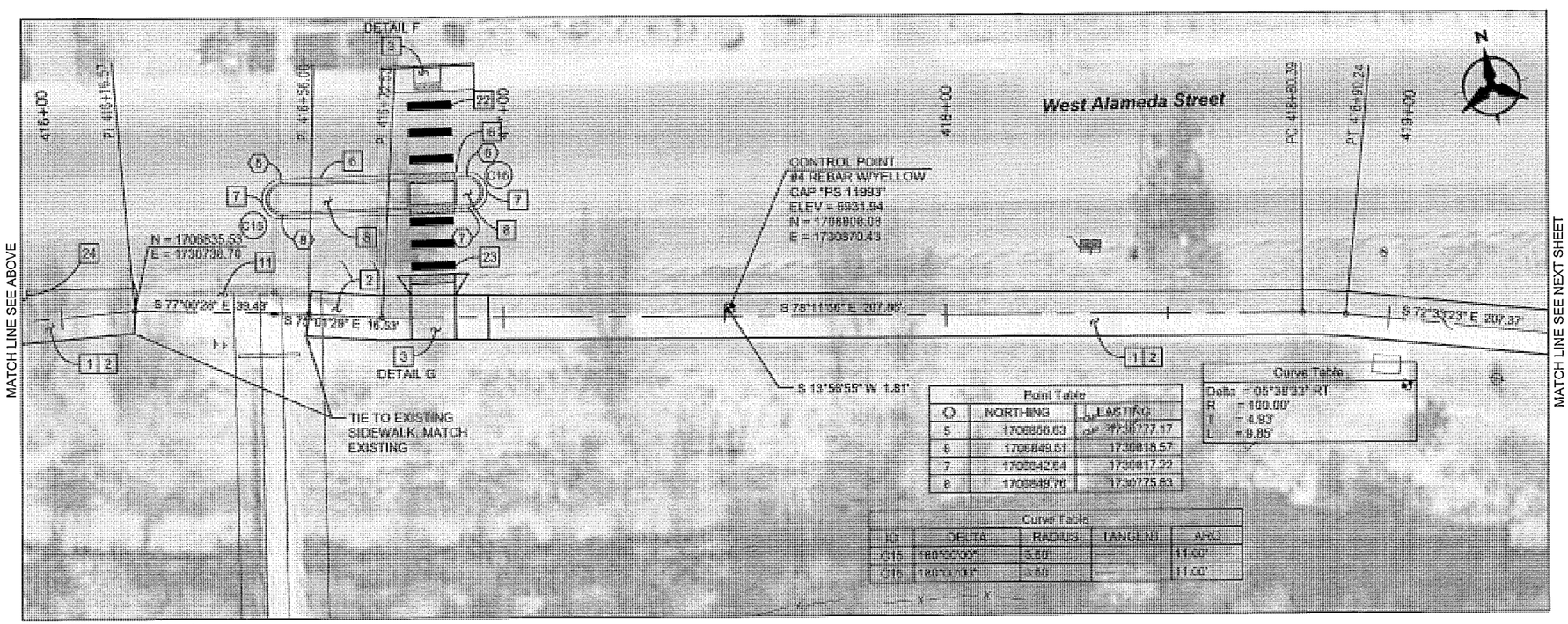

KEYED NOTES

1. BUILD 10' WIDE 4" CONCRETE SIDEWALK. SEE SHT. 2-1 FOR COLOR
2. REMOVE EXISTING SIDEWALK
3. BUILD WHEELCHAIR RAMP PER DETAIL, SHEETS 2-4 AND 2-5
4. BUILD RECYCLED CONCRETE WALL, SEE SHT 2-1 FOR DETAILS
5. EXISTING WHEELCHAIR RAMP TO REMAIN
6. BUILD CONCRETE BARRIER CURB & GUTTER, TYPE "D" PER NMDOT STD DWG 609-01-1/1.
7. PAINT MEDIAN NOSE YELLOW, INCIDENTAL TO BID ITEM 609418 CONCRETE VERTICAL CURB AND GUTTER 6"X18".
8. FILL MEDIANS WITH AMENDED SOIL AND INSTALL CLASS A SEEDING
9. SEE SHEET 10-1 FOR STORM DRAIN IMPROVEMENTS
10. EXISTING SIDEWALK TO REMAIN
11. BUILD RAILING PER NMDOT STD DRWG 607-20-1/4 THRU 3/4
12. BUILD 6' WIDE 4" BROWN CONCRETE SIDEWALK
13. BUILD HEADER CURB PER APWA STD DRWG 2415B
14. REMOVE BRICK AT NEW MEDIAN OPENING AND RESET AT BACK OF HEADER CURB. THIS SHALL BE CONSIDERED INCIDENTAL TO THE UNIT BID PRICE FOR THE HEADER CURB.
15. REMOVE EXISTING FENCE AT NEW OPENING
16. BUILD CEDAR RAIL FENCE PER MANUFACTURER'S RECOMMENDATIONS
17. REMOVE EXISTING CABLE AND REPLACE ON BOTH SIDES OF OPENING
18. CITY OF SANTA FE WILL CONTRACT WITH PNM TO RELOCATE LIGHTS PRIOR TO CONSTRUCTION
19. INSTALL REMOVABLE POST PER APWA STD DWG 2250, PAINTED YELLOW. STRIPE PER DETAIL SHEET 2-4.
20. CITY OF SANTA FE WILL COORDINATE WITH PNM TO REMOVE EXISTING POLE PRIOR TO CONSTRUCTION
21. REMOVE EXISTING TREE, INCLUDED IN CLEARING AND GRUBBING
22. SEE SHEET 7-1 THRU 7-3 FOR DETAILS
23. INSTALL COMPOST MULCH SOCK
24. SQUARE OFF SIDEWALK WHEN DISTANCE TO CURB IS LESS THAN 2'

0 15 30 60
SCALE IN FEET

JEANETTE A. WALTHER
NEW MEXICO
11243
10/21/14
REGISTERED PROFESSIONAL ENGINEER

No.	Date	REVISIONS	By

Designed By: JAW DATE: 07/2014
Drawn By: LAH DATE: 07/2014
Checked By: JAW DATE: 07/2014

Bohannan Huston
www.bhinc.com 800.877.5332

CITY OF SANTA FE

SANTA FE RIVER TRAIL
CONNECTIONS AND IMPROVEMENTS, PHASE 1
CAMINO DE CHELLY / AGUA FRIA TO CAMINO DEL CAMPO

WEST ALAMEDA

CN: S100280

Sheet 3-6

P:\20140268\TRANS\Design\Plan Production\Plans\20140268-Plan Sheets.dwg
Thu, 13-Nov-2014 - 12:58:pm, Plotted by: LAHINDE

MATCH LINE SEE PREVIOUS SHEET

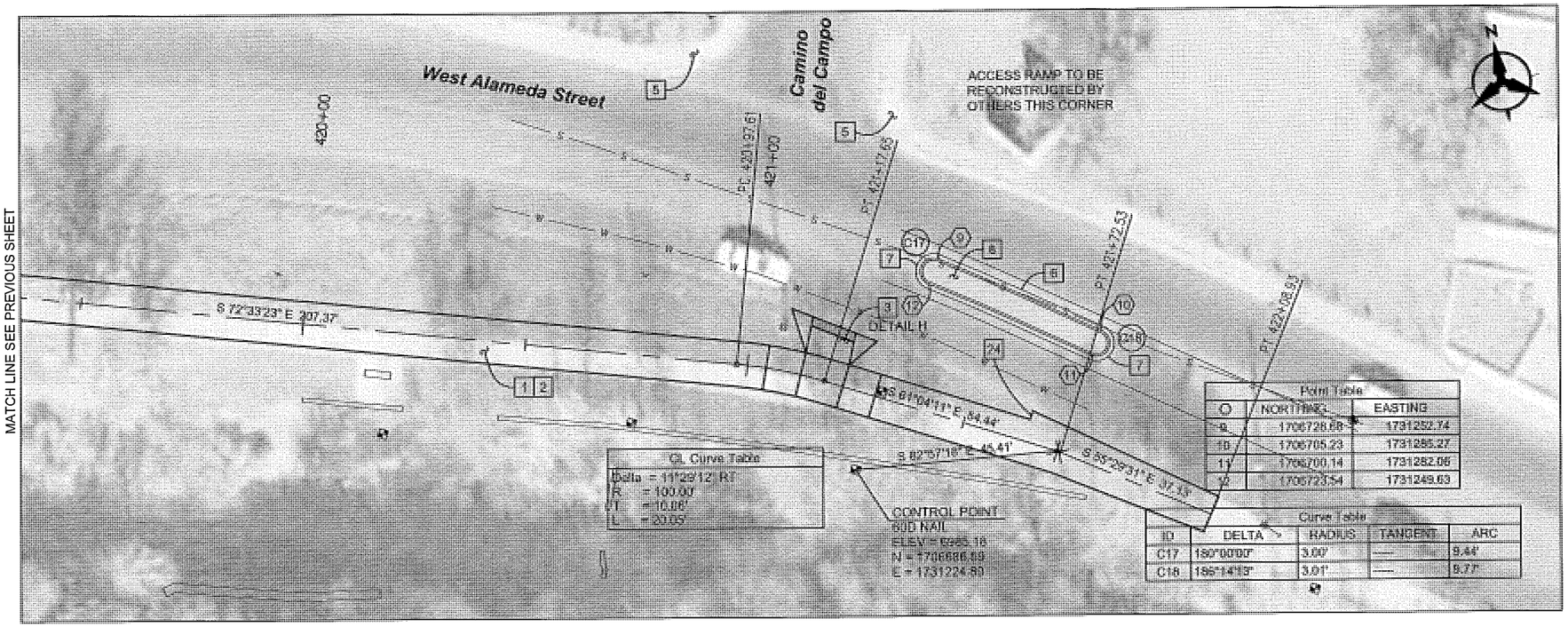

KEYED NOTES

1. BUILD 10' WIDE 4" CONCRETE SIDEWALK. SEE SHT. 2-1 FOR COLOR
2. REMOVE EXISTING SIDEWALK
3. BUILD WHEELCHAIR RAMP PER DETAIL, SHEETS 2-4 AND 2-5
4. BUILD RECYCLED CONCRETE WALL, SEE SHT 2-1 FOR DETAILS
5. EXISTING WHEELCHAIR RAMP TO REMAIN
6. BUILD CONCRETE BARRIER CURB & GUTTER, TYPE "D" PER NMDOT STD DWG 609-01-1/1.
7. PAINT MEDIAN NOSE YELLOW, INCIDENTAL TO BID ITEM 609418 CONCRETE VERTICAL CURB AND GUTTER 6"X18".
8. FILL MEDIANS WITH AMENDED SOIL AND INSTALL CLASS A SEEDING
9. SEE SHEET 10-1 FOR STORM DRAIN IMPROVEMENTS
10. EXISTING SIDEWALK TO REMAIN
11. BUILD RAILING PER NMDOT STD DRWG 607-20-1/4 THRU 3/4
12. BUILD 6' WIDE 4" BROWN CONCRETE SIDEWALK
13. BUILD HEADER CURB PER APWA STD DRWG 2415B
14. REMOVE BRICK AT NEW MEDIAN OPENING AND RESET AT BACK OF HEADER CURB. THIS SHALL BE CONSIDERED INCIDENTAL TO THE UNIT BID PRICE FOR THE HEADER CURB.
15. REMOVE EXISTING FENCE AT NEW OPENING
16. BUILD CEDAR RAIL FENCE PER MANUFACTURER'S RECOMMENDATIONS
17. REMOVE EXISTING CABLE AND REPLACE ON BOTH SIDES OF OPENING
18. CITY OF SANTA FE WILL CONTRACT WITH PNM TO RELOCATE LIGHTS PRIOR TO CONSTRUCTION
19. INSTALL REMOVABLE POST PER APWA STD DWG 2250, PAINTED YELLOW. STRIPE PER DETAIL SHEET 2-4.
20. CITY OF SANTA FE WILL COORDINATE WITH PNM TO REMOVE EXISTING POLE PRIOR TO CONSTRUCTION
21. REMOVE EXISTING TREE, INCLUDED IN CLEARING AND GRUBBING
22. SEE SHEET 7-1 THRU 7-3 FOR DETAILS
23. INSTALL COMPOST MULCH SOCK
24. SQUARE OFF SIDEWALK WHEN DISTANCE TO CURB IS LESS THAN 2'

0 15 30 60

SCALE IN FEET

JEANETTE A. WALTHER
NEW MEXICO
11243
REGISTERED PROFESSIONAL ENGINEER
10/21/14

No.	Date	REVISIONS	By

Designed By: JAW DATE: 07/2014
Drawn By: LAH DATE: 07/2014
Checked By: JAW DATE: 07/2014

Bohannan Huston
www.bhinc.com 800.877.5332

CITY OF SANTA FE

SANTA FE RIVER TRAIL
CONNECTIONS AND IMPROVEMENTS, PHASE 1
CAMINO DE CHELLY / AGUA FRIA TO CAMINO DEL CAMPO

WEST ALAMEDA

CN: S100280

Sheet 3-7

P:\20140268\TRANS\Design\Plan Production\Plans\20140268-Plan Sheets.dwg
Thu, 13-Nov-2014 - 12:59:pm, Plotted by: LAHINDE

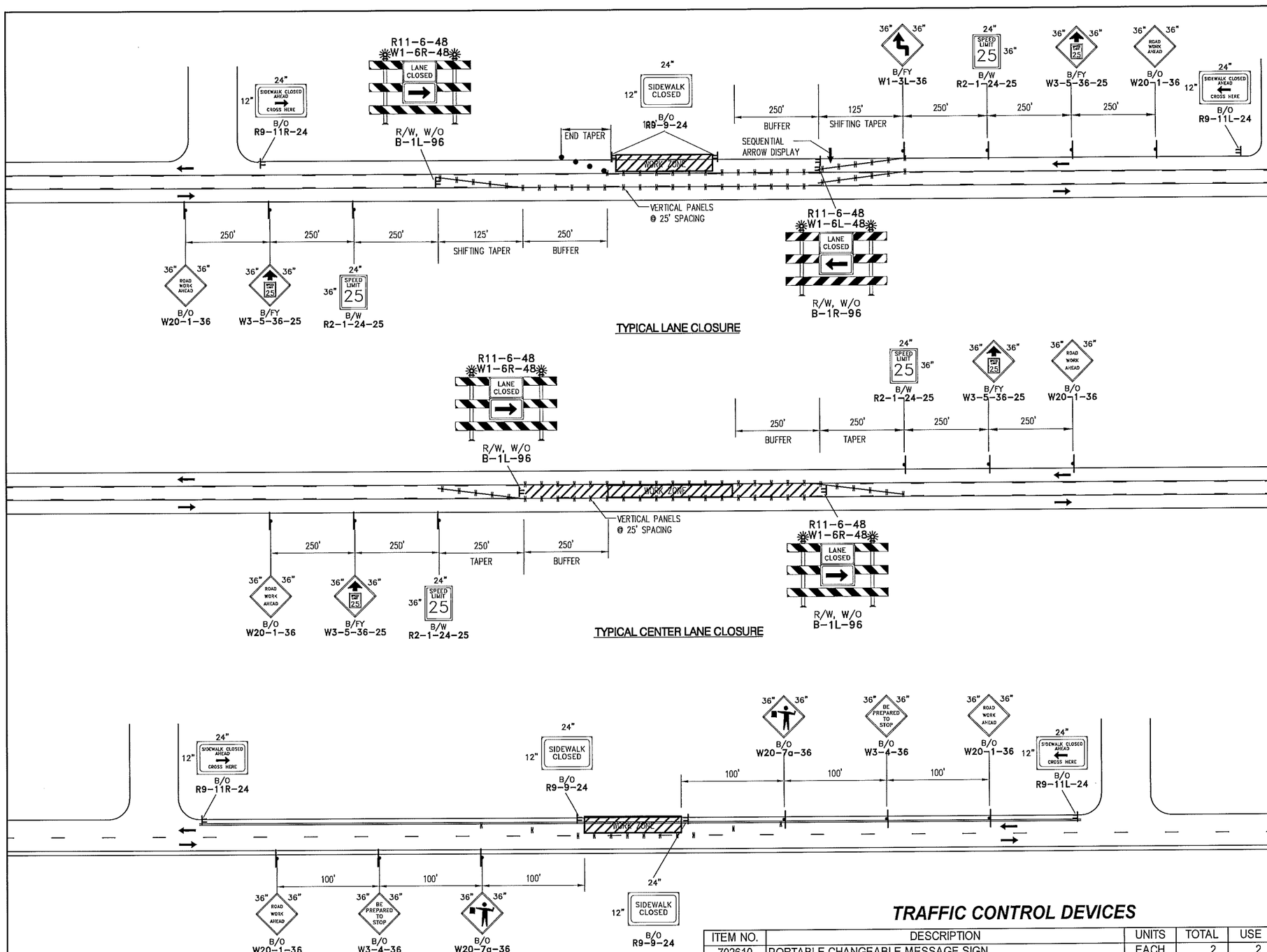

SEQUENCE OF CONSTRUCTION:

1. CONTRACTOR SHALL SUBMIT A DETAILED TRAFFIC CONTROL PLAN FOR EACH SPECIFIC LOCATION TO OBTAIN A TRAFFIC CONTROL PERMIT FROM THE CITY OF SANTA FE TRAFFIC ENGINEERING DEPARTMENT, CONTACT JOHN ROMERO, 505-955-6638.
2. ALL ADVANCE WARNING SIGNS SHALL BE BLACK ON ORANGE AND A MINIMUM OF 36" BY 36".
3. CONTRACTOR SHALL COMPLY WITH THE MANUAL ON UNIFORM TRAFFIC CONTROL DEVICES, LATEST EDITION.
4. CITY OF SANTA FE ORDINANCES PROHIBIT NOISE BETWEEN 9:00PM AND 7:00AM.

TRAFFIC CONTROL DEVICES

ITEM NO.	DESCRIPTION	UNITS	TOTAL	USE
702610	PORTABLE CHANGEABLE MESSAGE SIGN	EACH	2	2
702810	TRAFFIC CONTROL DEVICES FOR CONSTRUCTION	SQ FT	LS	LS
	(ITEM NO. INCLUDES THE FOLLOWING ITEMS):			
	CONSTRUCTION SIGNING	SQ FT	135	140
	STEEL POSTS AND BASE POSTS FOR CONSTRUCTION SIGNING	FT	0	0
	PORTABLE SIGN SUPPORT	EACH	8	8
	BARRICADE, TYPE III - 2.4 m	EACH	2	2
	CHANNELIZATION DEVICE TYPE VERTICAL PANELS	EACH	30	30

JEANETTE A. WALTHER
NEW MEXICO
11243
10/21/14
REGISTERED PROFESSIONAL ENGINEER

No.	Date	REVISIONS	By

Designed By:	JAW	DATE: 07/2014
Drawn By:	LAH	DATE: 07/2014
Checked By:	JAW	DATE: 07/2014

Bohannan Huston
www.bhinc.com 800.877.5332

CITY OF SANTA FE
SANTA FE RIVER TRAIL
CONNECTIONS AND IMPROVEMENTS, PHASE 1
CAMINO DE CHELLY / AGUA FRIA TO CAMINO DEL CAMPO

TRAFFIC CONTROL PLAN

CN: S100280

Sheet 6-1

P:\20140268\TRANS\Design\Plan Production\Plans\20140268-TCP.dwg
Thu, 13-Nov-2014 - 12:59:pm, Plotted by: LAHINDE

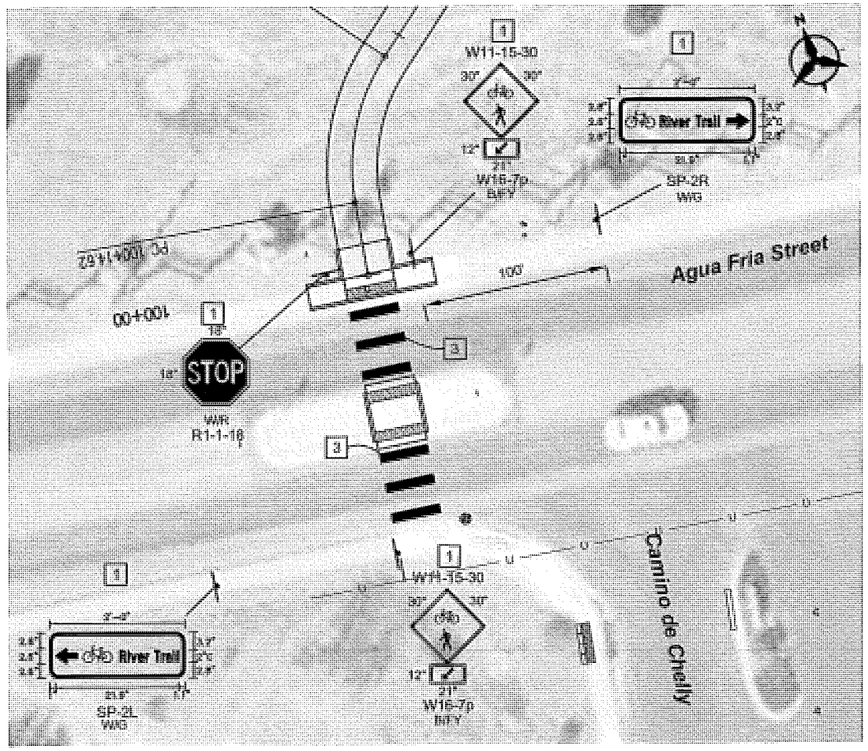

FRENCHY'S PARK

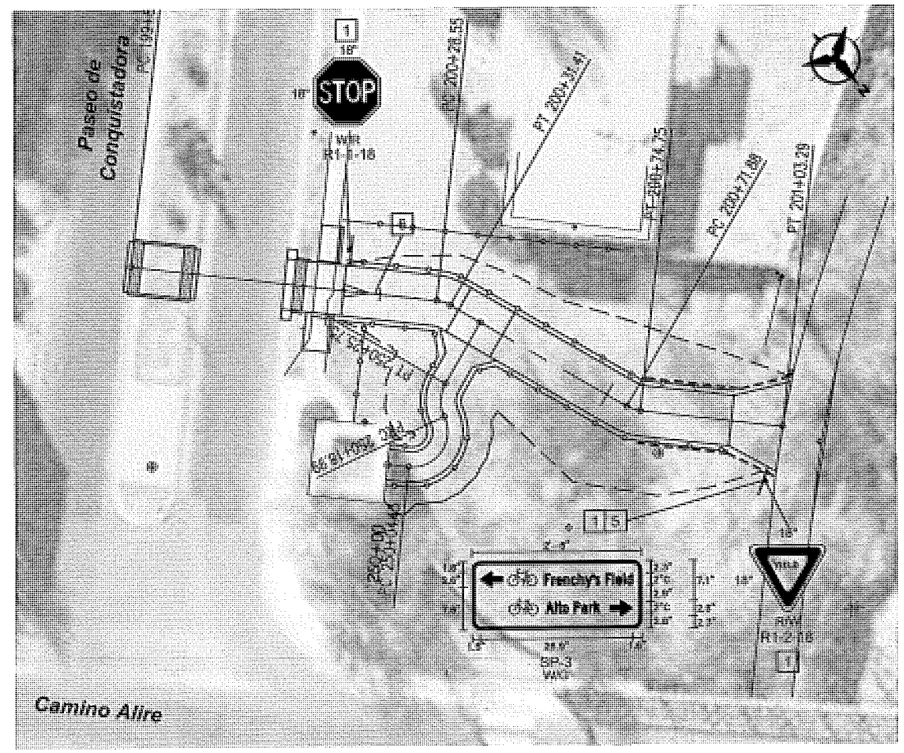

CONQUISTADORA

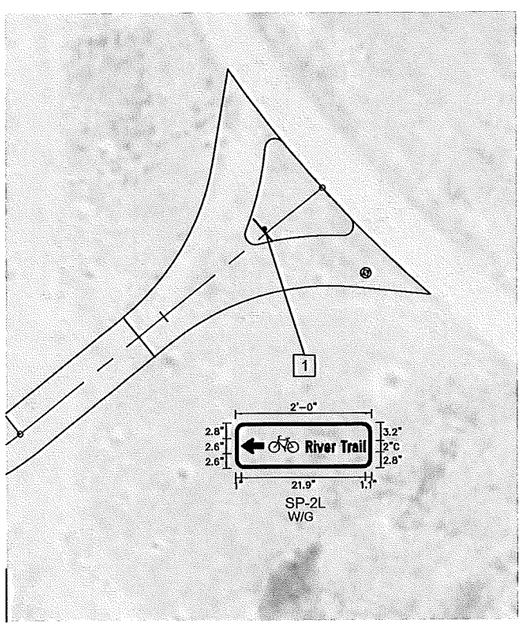

FRENCHY'S PARK

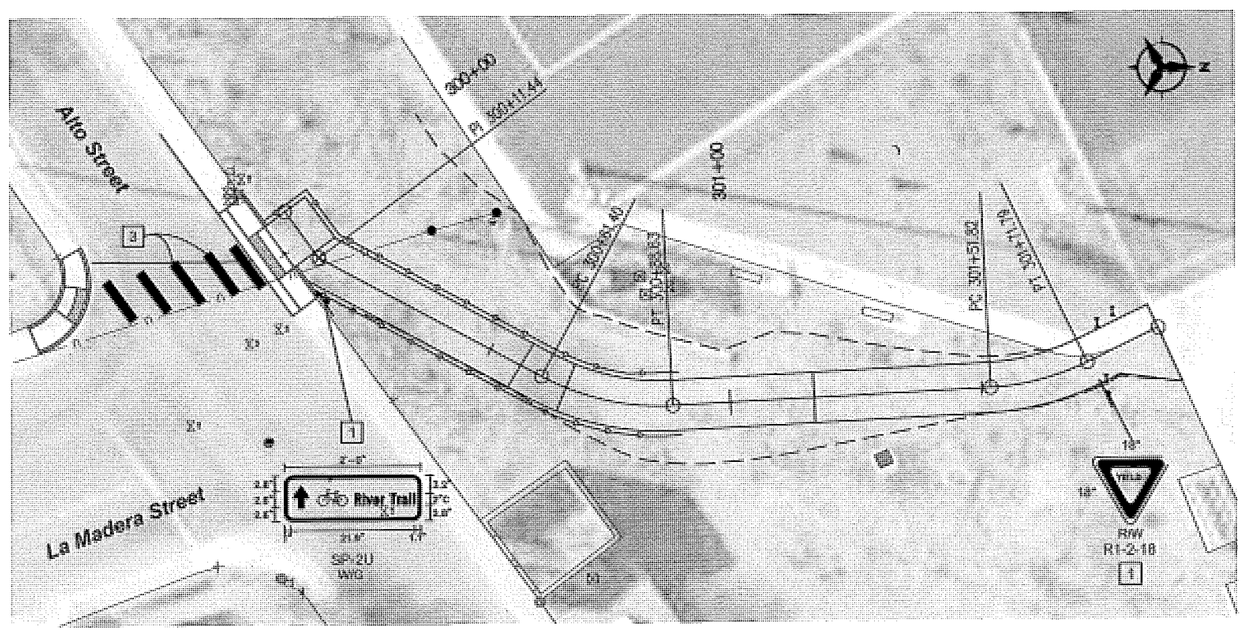

ALTO PARK

KEYED NOTES

1. INSTALL NEW SIGN
2. NOT USED
3. 24" SOLID WHITE CONTINENTAL CROSSWALK - TYPE I - RETROREFLECTIVE PREFORMED PAVEMENT STRIPE
4. REMOVE & RESET EXISTING SIGN

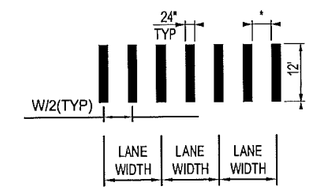

CROSSWALK PAVEMENT MARKING DETAIL

NTS

* SPACING IS BASED ON LANE WIDTH ALIGN CENTER OF CONTINENTAL STRIPE ON CENTER OF LANE STRIPE AND IN CENTER OF LANE AS SHOWN

0 15 30 60

SCALE IN FEET

JEANETTE A. WALTHER NEW MEXICO 11243 REGISTERED PROFESSIONAL ENGINEER 10/21/14

No.	Date	REVISIONS	By

Designed By:	JAW	DATE: 07/2014
Drawn By:	LAH	DATE: 07/2014
Checked By:	JAW	DATE: 07/2014

Bohannan Huston
www.bhinc.com 800.877.5332

CITY OF SANTA FE

SANTA FE RIVER TRAIL
CONNECTIONS AND IMPROVEMENTS, PHASE 1
CAMINO DE CHELLY / AGUA FRIA TO CAMINO DEL CAMPO

PERMANENT SIGNING & STRIPING PLANS

CN: S100280

Sheet 7-1

P:\20140268\TRANS\Design\Plan Production\Plans\20140268-PermSign.dwg
Thu, 13-Nov-2014 - 1:00:pm, Plotted by: LAHINDE

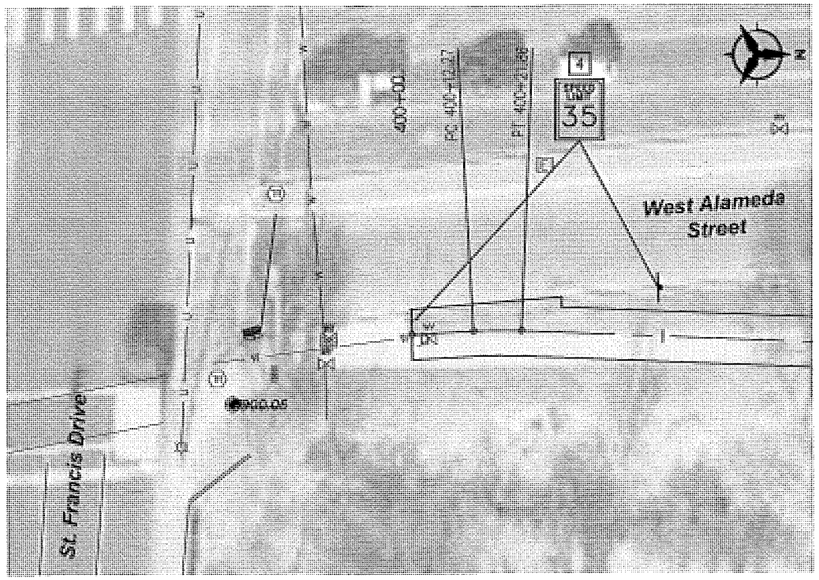

WEST ALAMEDA

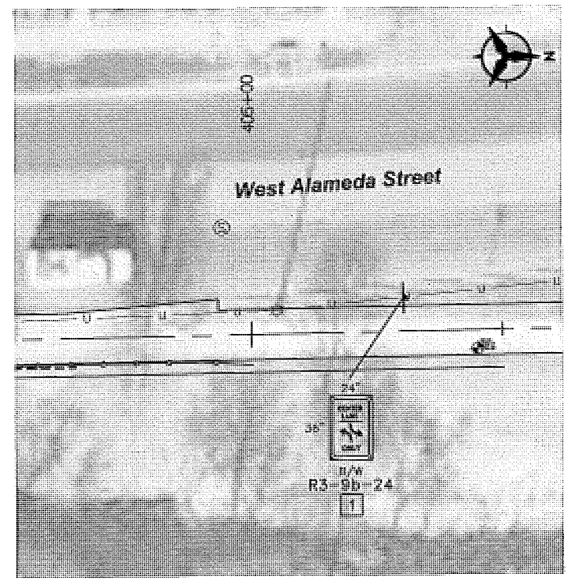

WEST ALAMEDA

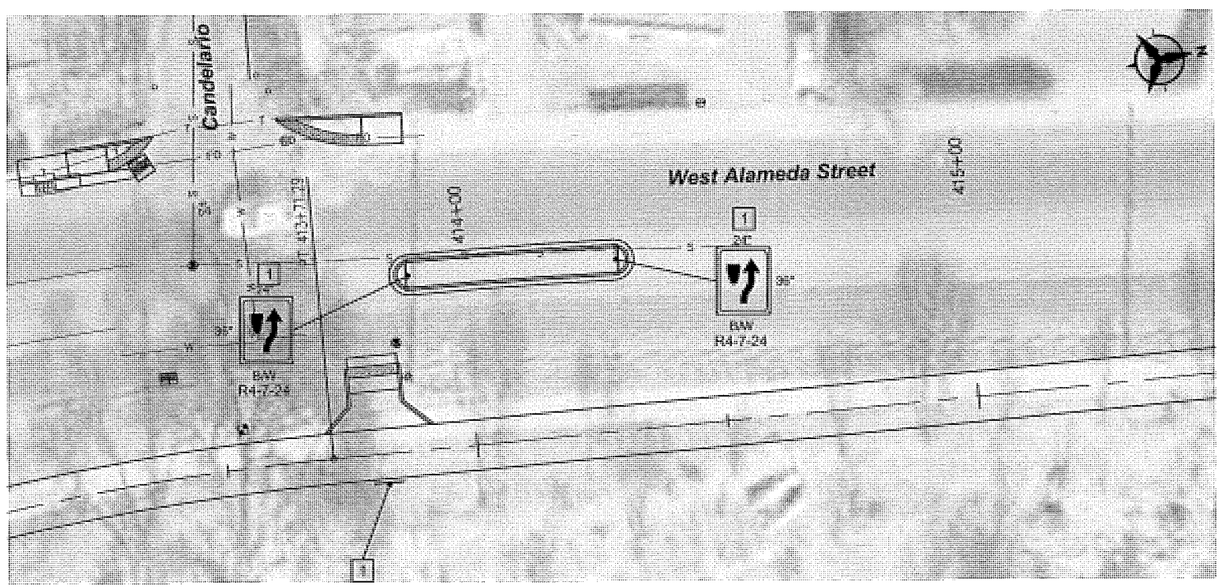

WEST ALAMEDA

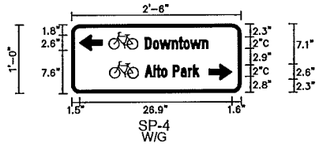

SP-4
W/G

P:\20140268\TRANS\Design\Plan Production\Plans\20140268-PermSign.dwg
Thu, 13-Nov-2014 - 1:00:pm, Plotted by: LAHINDE

KEYED NOTES

1. INSTALL NEW SIGN
2. NOT USED
3. 24" SOLID WHITE CONTINENTAL CROSSWALK - TYPE I - RETROREFLECTIVE PREFORMED PAVEMENT STRIPE
4. REMOVE & RESET EXISTING SIGN

0 15 30 60
SCALE IN FEET

JEANETTE A. WALTHER
NEW MEXICO
11243
10/21/14
REGISTERED PROFESSIONAL ENGINEER

No.	Date	REVISIONS	By

Designed By:	JAW	DATE: 07/2014
Drawn By:	LAH	DATE: 07/2014
Checked By:	JAW	DATE: 07/2014

Bohannan Huston
www.bhinc.com 800.877.5332

CITY OF SANTA FE
SANTA FE RIVER TRAIL
CONNECTIONS AND IMPROVEMENTS, PHASE 1
CAMINO DE CHELLY / AGUA FRIA TO CAMINO DEL CAMPO

PERMANENT SIGNING & STRIPING PLANS

CN: S100280

Sheet 7-2

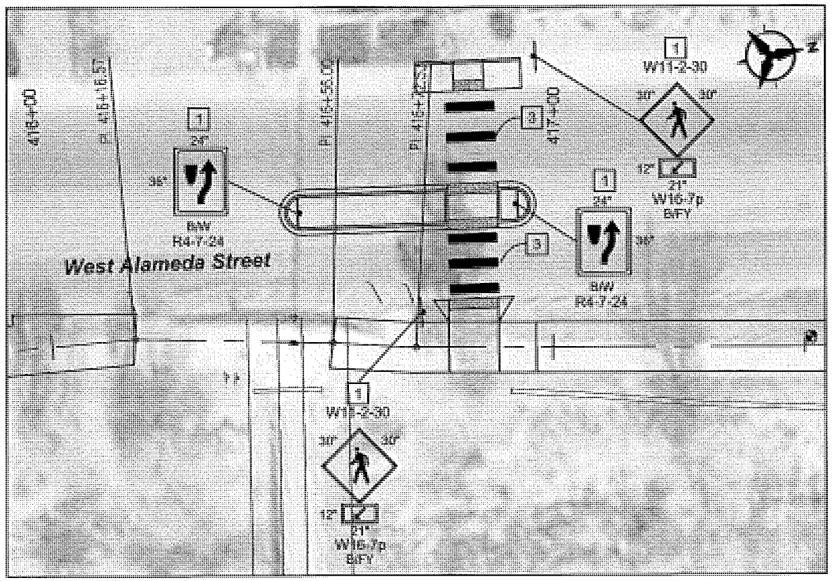

WEST ALAMEDA

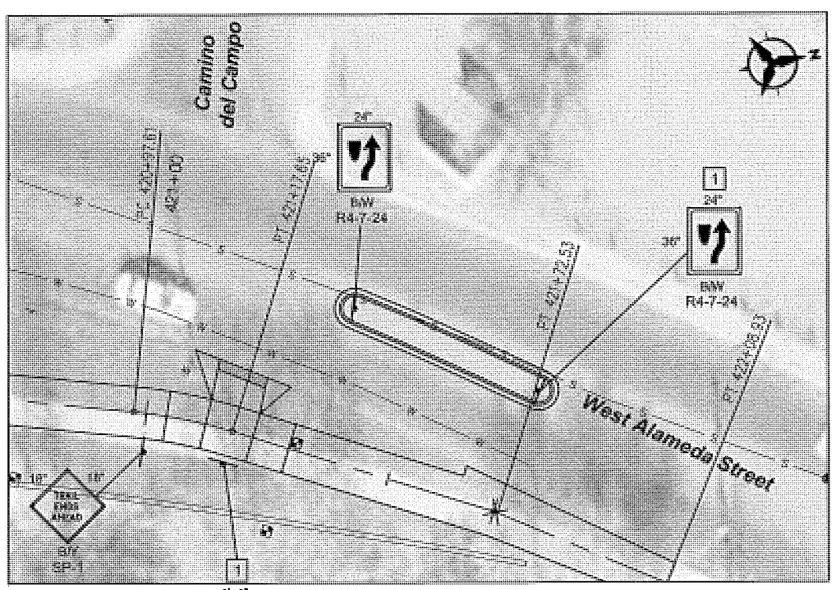

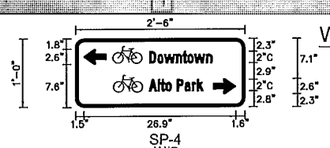

SP-4
W/G

WEST ALAMEDA

SIGNING

SIGN CODE	NO. OF SIGNS	WIDTH	HEIGHT	NEW TOTAL SIGN SQ FT	REMOVE & RESET EX SIGN EACH	POST LENGTHS (FT)				BASE POSTS	
						RIGHT	CENTER	LEFT	TOTAL	NO.	TOTAL LENGTH FT
R1-1-18	2	1.50	1.50	4.50			8.5		17.0	2	7.0
R1-2-18	2	1.50	1.50	4.50			8.5		17.0	2	7.0
R2-1-35					1.00						
R3-9b-24	1	2.00	3.00	6.00			10.0		10.0	1	3.5
R4-7-24	6	2.00	3.00	36.00			10.0		60.0	6	21.0
SP-1 (TRAIL ENDS)	1	1.50	1.50	2.25			8.5		8.5	1	3.5
SP-2 (SF RIVER TRAIL)	4	1.50	0.75	4.50			7.5		30.0	4	14.0
SP-3	1	2.00	0.75	1.50							
SP-4	2	1.50	0.75	2.25			7.5		15.0	2	7.0
W11-2-30	2	2.50	2.50	12.50			10.0		20.0	2	7.0
W11-15-30	2	2.50	2.50	12.50			10.0		20.0	2	7.0
W16-7P	4	1.75	1.00	7.00							
				0.00							
				0.00							
				0.00							
				0.00							
TOTAL				93.50	1.00				197.50		77.00
USE				95.00	1.00				198.00		77.00

KEYED NOTES

1. INSTALL NEW SIGN
2. NOT USED
3. 24" SOLID WHITE CONTINENTAL CROSSWALK - TYPE I - RETROREFLECTIVE PREFORMED PAVEMENT STRIPE
4. REMOVE & RESET EXISTING SIGN

0 15 30 60
SCALE IN FEET

JEANETTE A. WALTHER
NEW MEXICO
11243
10/21/14
REGISTERED PROFESSIONAL ENGINEER

No.	Date	REVISIONS	By

Designed By: JAW DATE: 07/2014
Drawn By: LAH DATE: 07/2014
Checked By: JAW DATE: 07/2014

Bohannan Huston
www.bhinc.com 800.877.5332

CITY OF SANTA FE
SANTA FE RIVER TRAIL
CONNECTIONS AND IMPROVEMENTS, PHASE 1
CAMINO DE CHELLY / AGUA FRIA TO CAMINO DEL CAMPO

PERMANENT SIGNING & STRIPING PLANS

CN: S100280

Sheet 7-3

P:\20140268\TRANS\Design\Plan Production\Plans\20140268-PermSign.dwg
Thu, 13-Nov-2014 - 1:00:pm, Plotted by: LAHINDE

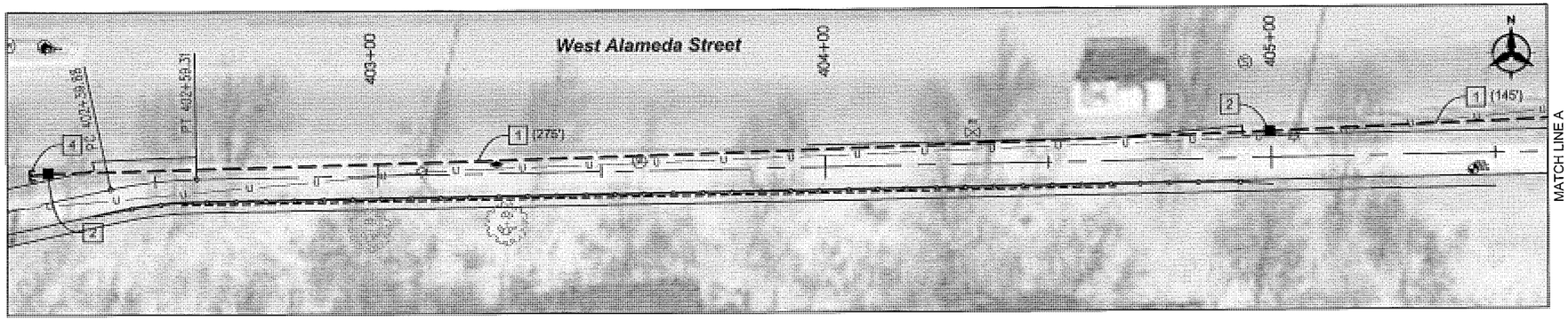

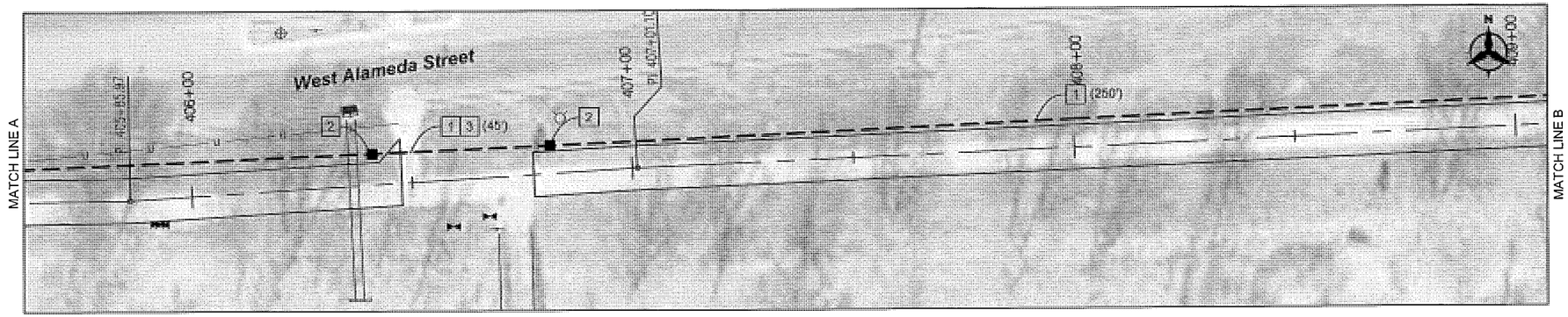

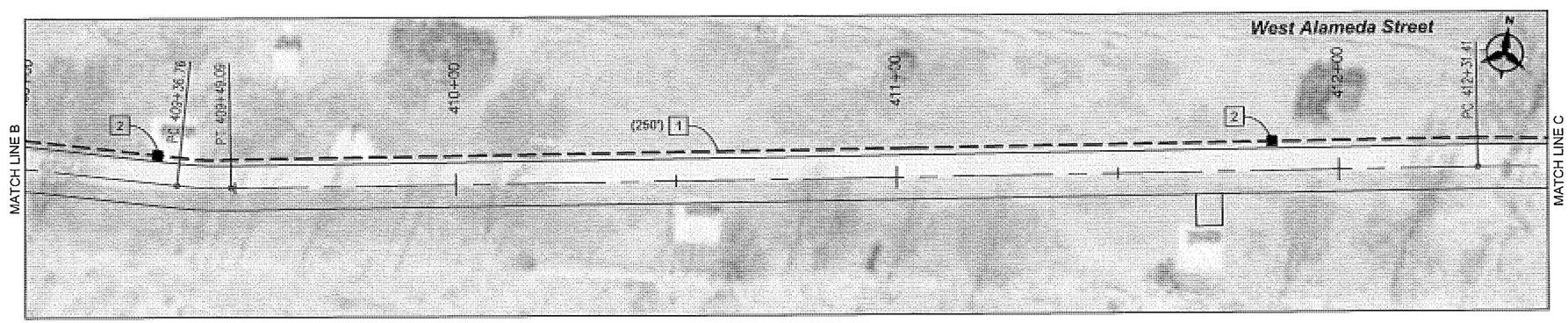

KEYED NOTES

1. RIGID ELECTRICAL CONDUIT - 2"
2. STANDARD ELECTRICAL PULL BOX
3. BORE CONDUIT UNDER EXISTING PEDESTRIAN BRIDGE LANDING
4. RIGID ELECTRICAL CONDUIT - 2" STUBOUT

NOTES

1. INSTALL NEW CONDUIT ADJACENT TO NEW TRAIL.
2. SEE SHEET 12-15 FOR PULL BOX DETAILS.

0 15 30 60

SCALE IN FEET

JEANETTE A. WALTHER
NEW MEXICO
11243
REGISTERED PROFESSIONAL ENGINEER
10/21/14

No.	Date	REVISIONS	By

Designed By:	JAW	DATE: 07/2014
Drawn By:	LAH	DATE: 07/2014
Checked By:	JAW	DATE: 07/2014

Bohannan Huston
www.bhinc.com 800.877.5332

CITY OF SANTA FE

SANTA FE RIVER TRAIL
CONNECTIONS AND IMPROVEMENTS, PHASE 1
CAMINO DE CHELLY / AGUA FRIA TO CAMINO DEL CAMPO

LIGHTING CONDUIT PLANS

CN: S100280

Sheet 8-1

P:\20140268\TRANS\Design\Plan Production\Plans\20140268-Lighting.dwg
Thu, 13-Nov-2014 - 1:01:pm, Plotted by: LAHINDE

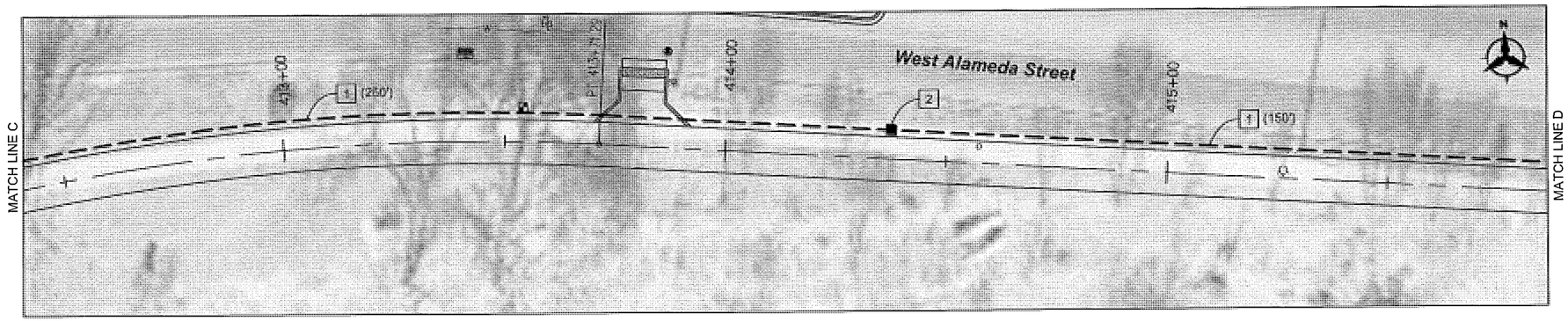

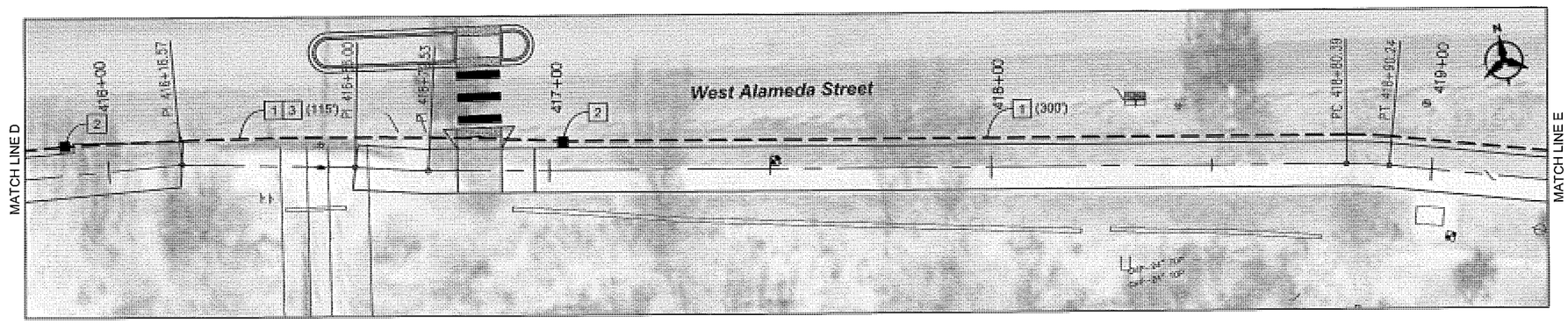

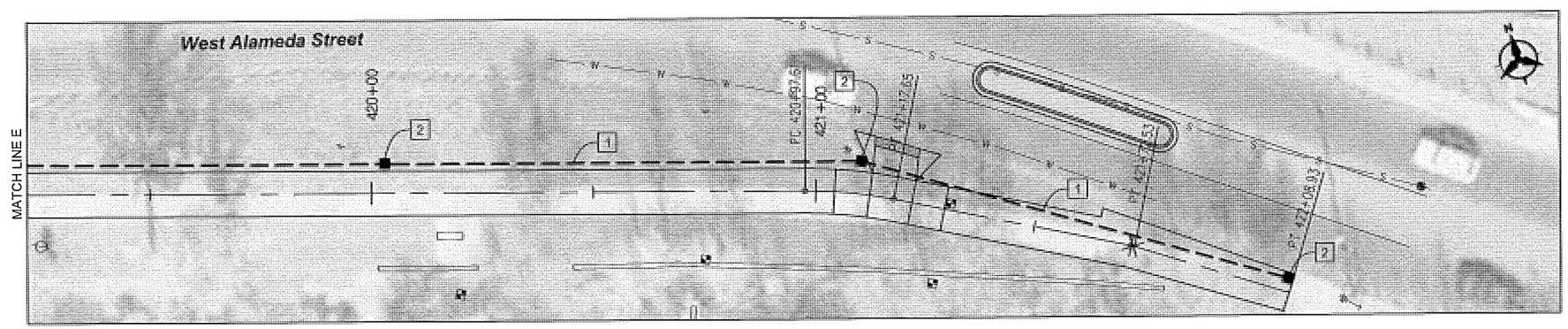

KEYED NOTES

1. RIGID ELECTRICAL CONDUIT - 2"
2. STANDARD ELECTRICAL PULL BOX
3. BORE CONDUIT UNDER EXISTING PEDESTRIAN BRIDGE LANDING
4. RIGID ELECTRICAL CONDUIT - 2" STUBOUT

NOTES

1. INSTALL NEW CONDUIT ADJACENT TO NEW TRAIL.
2. SEE SHEET 12-15 FOR PULL BOX DETAILS.

LIGHTING CONDUIT

ITEM NO.	DESCRIPTION	UNIT	QTY
709020	RIGID ELECTRICAL CONDUIT 2" (DIA)	LF	1980
710000	ELECTRICAL PULL BOX (STANDARD)	EACH	12

0 15 30 60

SCALE IN FEET

JEANETTE A. WALTHER
NEW MEXICO
11243
10/21/14
REGISTERED PROFESSIONAL ENGINEER

No.	Date	REVISIONS	By

Designed By: JAW DATE: 07/2014
Drawn By: LAH DATE: 07/2014
Checked By: JAW DATE: 07/2014

Bohannan Huston
www.bhinc.com 800.877.5332

CITY OF SANTA FE

SANTA FE RIVER TRAIL
CONNECTIONS AND IMPROVEMENTS, PHASE 1
CAMINO DE CHELLY / AGUA FRIA TO CAMINO DEL CAMPO

LIGHTING CONDUIT PLANS

CN: S100280

Sheet 8-2

P:\20140268\TRANS\Design\Plan Production\Plans\20140268-Lighting.dwg
Thu, 13-Nov-2014 - 1:02:pm, Plotted by: LAHINDE

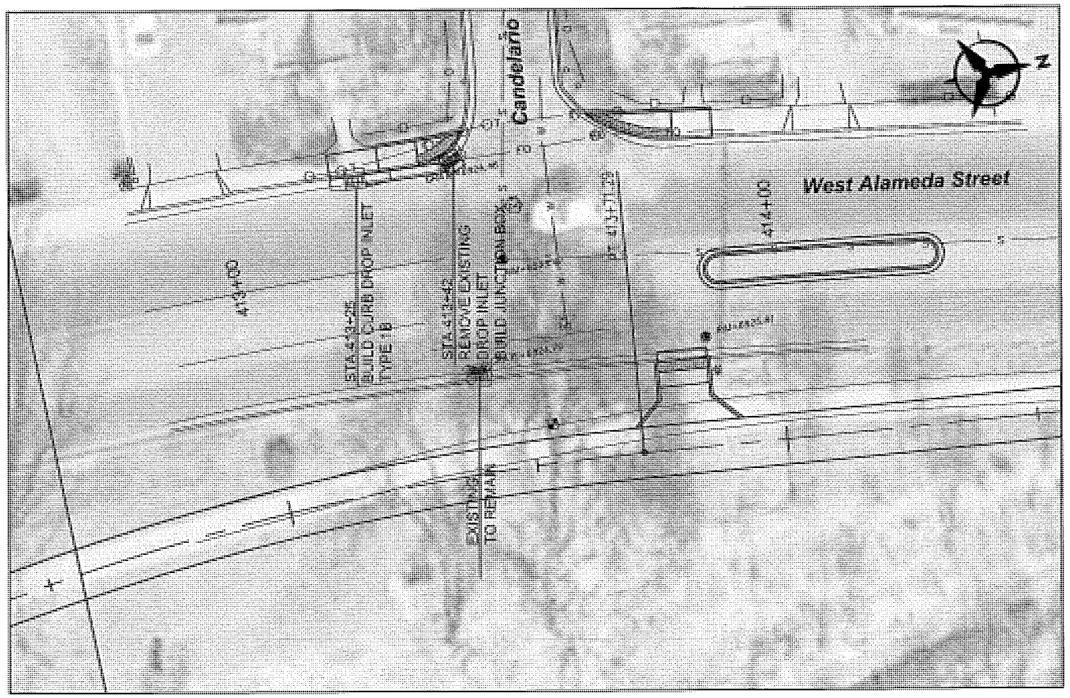

STORM DRAIN PROFILE

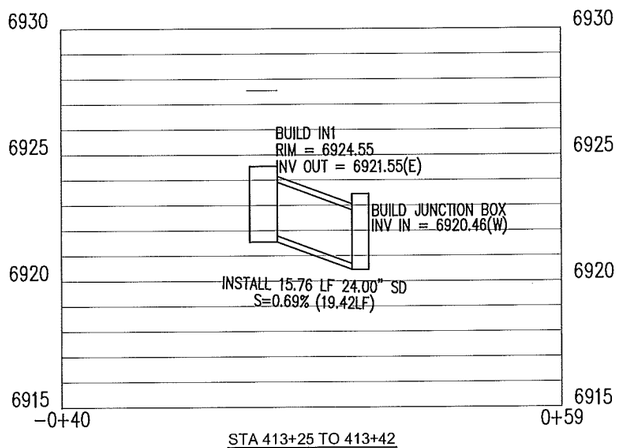

STA 413+25 TO 413+42

NOTE: ALL ELEVATIONS ARE BASED ON EXISTING INLET GRATE ELEVATION AND ARE APPROXIMATE.

STA 413+25 LT BUILD DROP INLET, TYPE I-B, H=4'
STA 413+42 LT REMOVE EXISTING DROP INLET & REPLACE WITH JUNCTION BOX WITH INVERT AT EXISTING ELEVATION. TIE TO EXISTING STORM DRAIN.
TIE TO DROP INLET WITH 15.76'-24" CULVERT PIPE

ESTIMATED STRUCTURE QUANTITIES

ITEM NO.	DESCRIPTION	UNIT	QTY
570024	24" CULVERT PIPE	LF	15.00
623311	CDI TYPE I-B, TO 4'	EACH	1.00
623600	JUNCTION BOX	EACH	1.00

0 15 30 60
SCALE IN FEET

JEANETTE A. WALTHER
NEW MEXICO
1243
REGISTERED PROFESSIONAL ENGINEER
10/21/14

No.	Date	REVISIONS	By

Designed By: JAW DATE: 07/2014
Drawn By: LAH DATE: 07/2014
Checked By: JAW DATE: 07/2014

Bohannan Huston
www.bhinc.com 800.877.5332

CITY OF SANTA FE
SANTA FE RIVER TRAIL
CONNECTIONS AND IMPROVEMENTS, PHASE 1
CAMINO DE CHELLY / AGUA FRIA TO CAMINO DEL CAMPO

DRAINAGE STRUCTURE DETAIL

CN: S100280

Sheet 10-1

P:\20140268\TRANS\Design\Plan Production\Plans\20140268-DrainStruct.dwg
Thu, 13-Nov-2014 - 1:02:pm, Plotted by: LAHINDE

MAXIMUM HEIGHT OF FILL IN FEET

PIPE DIAMETER INCHES	CLASS 2 PIPE			CLASS 3 PIPE			CLASS 4 PIPE			CLASS 5 PIPE		
	TYPE 1 INSTALL	TYPE 2 INSTALL	TYPE 3 INSTALL	TYPE 1 INSTALL	TYPE 2 INSTALL	TYPE 3 INSTALL	TYPE 1 INSTALL	TYPE 2 INSTALL	TYPE 3 INSTALL	TYPE 1 INSTALL	TYPE 2 INSTALL	TYPE 3 INSTALL
12	15	11	8	21	16	12	32	25	19	50	38	30
18	16	11	8	22	16	12	34	25	20	52	39	31
24	16	11	8	22	16	12	34	25	20	52	39	31
30	15	11	8	22	16	12	34	25	20	52	39	31
36	15	11	8	22	16	12	33	25	20	51	39	31
42	15	11	8	22	16	12	33	25	20	51	39	31
48	15	11	8	22	16	12	33	25	19	51	39	31
54	15	11	8	21	16	12	33	25	19	51	39	30
60	14	11	8	21	16	12	32	25	19	51	39	30
66	14	10	7	21	16	12	32	25	19	50	39	30
72	14	10	7	20	15	11	32	24	19	50	38	29
78	14	10	7	20	15	11	31	24	18	49	38	29
84	13	10	7	20	15	11	31	24	18	49	38	29
90	13	10	7	20	15	11	31	24	18	49	38	29
96	13	10	7	19	15	11	31	24	18	49	38	29
102	13	9	6	19	15	11	30	24	18	48	38	29
108	12	9	6	19	14	10	30	24	18	48	38	29

NOTE:
FOR PIPE DIAMETERS GREATER THAN 108 INCHES, ASTM AND AASHTO ALLOW FOR SPECIAL DESIGN, CONSULT PIPE MANUFACTURER FOR DESIGN. IF DEEPER FILL HEIGHTS ARE NEEDED, CONSULT PIPE MANUFACTURER. SPECIAL PIPE DESIGN AND MODIFIED INSTALLATION CAN YIELD DEEPER FILL HEIGHTS.

SOIL AND MINIMUM COMPACTION REQUIREMENTS

INSTALLATION TYPE	BEDDING THICKNESS	HAUNCH AND OUTER BEDDING	LOWER SIDE
TYPE 1	Do/24 MINIMUM, NOT LESS THAN 3". IF ROCK FOUNDATION, USE Do/12 MINIMUM, NOT LESS THAN 6".	95% CATEGORY I	90% CATEGORY I, 95% CATEGORY II, OR 100% CATEGORY III
TYPE 2	Do/24 MINIMUM, NOT LESS THAN 3". IF ROCK FOUNDATION, USE Do/12 MINIMUM, NOT LESS THAN 6".	90% CATEGORY I OR 95% CATEGORY II	85% CATEGORY I, 90% CATEGORY II, OR 95% CATEGORY III
TYPE 3	Do/24 MINIMUM, NOT LESS THAN 3". IF ROCK FOUNDATION, USE Do/12 MINIMUM, NOT LESS THAN 6".	85% CATEGORY I, 90% CATEGORY II, OR 95% CATEGORY III	85% CATEGORY I, 90% CATEGORY II, OR 95% CATEGORY III

NOTE: THESE COMPACTION VALUES ARE FOR THE STANDARD PROCTOR TEST.

Do = OUTSIDE DIAMETER OF PIPE. (O.D.)

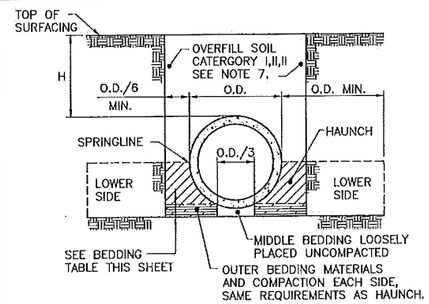

TRENCH INSTALLATION

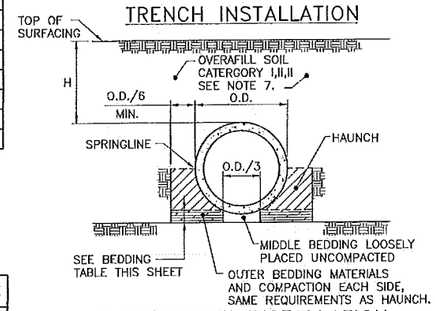

EMBANKMENT INSTALLATION

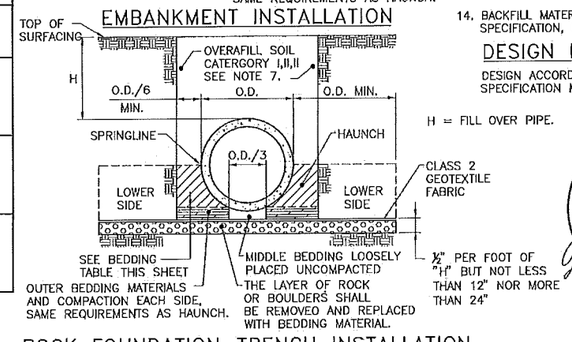

H = FILL OVER PIPE.

ROCK FOUNDATION–TRENCH INSTALLATION

GENERAL NOTES:

1. CONCRETE PIPE SHALL CONFORM TO ALL REQUIREMENTS OF AASHTO OF AASHTO SPECIFICATION M 170.
2. PIPES THAT SHOW DAMAGE OR CRACKS WIDER THAN 0.01 INCH PRIOR TO INSTALLATION NOT TO BE USED.
3. EXCAVATE A TRENCH OF EQUAL OR GREATER WIDTH REQUIRED BY 570. INCREASE THE TRENCH WIDTH TO 2 FT. MINIMUM EACH SIDE OF THE PIPE WHEN THE UNDISTURBED NATIVE MATERIAL IN THE LOWER SIDE ZONE IS UNSUITABLE MATERIAL.
4. OVER–EXCAVATE UNSUITABLE PIPE FOUNDATION MATERIAL AS DIRECTED BY THE ENGINEER. REPLACE WITH SUITABLE MATERIAL.
5. RECESS THE BEDDING TO RECEIVE PIPE JOINTS WHERE APPLICABLE.
6. DO NOT DISTURB THE INSTALLED PIPE OR EMBEDMENT OR LEAVE VOIDS WHEN USING TRENCH BOXES AND SHIELDS.
7. REFER TO THE PROJECT PLANS FOR MATERIAL OUTSIDE OF THE PIPE BACKFILL AREA.
8. MEASURE MAXIMUM FILL HEIGHT FROM TOP OF THE PIPE TO TOP OF THE PAVEMENT SURFACE AT HIGHEST FILL SECTION.
9. FILL HEIGHTS OVER 40 FEET SHALL BE USED ONLY AFTER A THROUGH INVESTIGATION OF THE FOUNDATION MATERIALS.
10. THE MINIMUM HEIGHT OF FILL BETWEEN THE TOP OF THE PIPE AND THE FINISHED ROADWAY GRADE SHALL BE 1'–9" FOR UNPAVED ROADS AND BITUMINOUS PAVED ROADS AND 1'–3" FOR CONCRETE PAVED ROADS WITH COMPACTED FILL.
11. SUITABLE MATERIAL FOR STABILIZING THE CULVERT FOUNDATION SHALL CONSIST OF MATERIAL APPROVED BY THE PROJECT MANAGER. THE MATERIAL MAY BE OBTAINED FROM ROADWAY, STRUCTURE EXCAVATION, OR FROM BORROW AS DIRECTED BY THE PROJECT MANGER. THE DEPTH OF SUCH MATERIAL SHALL BE DETERMINED BY THE PROJECT MANAGER IN THE FIELD AFTER EXAMINATION OF THE NATURAL FOUNDATION MATERIAL, CONSIDERING THE DIAMETER OF THE PIPE AND HEIGHT OF COVER.
12. FOR MULTIPLE INSTALLATIONS, PIPES SHALL BE SPACED TO PROVIDE 2 FEET CLEAR DISTANCE BETWEEN END SECTIONS. SEE 570–02–1/2 AND 2/2. THE CENTER TO CENTER SPACING OF PIPES SHALL BE THE OUTSIDE DIAMETER PLUS 3 FEET.
13. EXISTING GROUND UNDER PIPE BEDDING SHALL BE BROKEN UP AND COMPACTED TO A MINIMUM DEPTH OF 6 INCHES REGARDLESS OF FILL HEIGHT. COMPACTION SHALL BE 95% OF MAXIMUM DENSITY PER AASHTO T–99.
14. BACKFILL MATERIAL SHALL CONFORM TO SECTION 206 OF THE NMDOT STANDARD SPECIFICATION, CURRENT EDITION.

DESIGN DATA:

DESIGN ACCORDING TO AASHTO LRFD BRIDGE DESIGN SPECIFICATION, DATED 2011 SPECIFICATION M 170.

TIMOTHY A. MARRS NEW MEXICO 14072 REGISTERED PROFESSIONAL ENGINEER
4-10-12

DATE	BY	DESCRIPTION

REVISIONS (OR CHANGE NOTICES)

NEW MEXICO
DEPARTMENT OF TRANSPORTATION
STANDARD DRAWING

FILL HEIGHT AND BEDDING DETAILS FOR CIRCULAR CONCRETE PIPE CULVERTS

DESIGNED BY: DRAWN BY: SKL CHECKED BY: YML/TM
206-01-1/1 1 of 1

No.	Date	REVISIONS	By

Designed By:	JAW	DATE: 07/2014
Drawn By:	LAH	DATE: 07/2014
Checked By:	JAW	DATE: 07/2014

Bohannan Huston
www.bhinc.com 800.877.5332

CITY OF SANTA FE
SANTA FE RIVER TRAIL
CONNECTIONS AND IMPROVEMENTS, PHASE 1
CAMINO DE CHELLY / AGUA FRIA TO CAMINO DEL CAMPO

STANDARD DETAILS

CN: S100280

Sheet 12-1

P:\20140268\TRANS\Design\Plan Production\Plans\20140268-Serials.dwg
Thu, 13-Nov-2014 – 1:02:pm, Plotted by: LAHINDE

TABLE 1-R

HELICAL CORRUGATED STEEL PIPE-2 2/3" X 1/2" CORRUGATION

DIAMETER OF PIPE (INCHES)	MAX. DEPTH OF COVER ABOVE TOP OF PIPE (FEET)						MIN. CVR (INCHES)
	15	16-20	21-25	26-30	31-35	36-40	
	SPECIFIED WALL THICKNESS (INCH)						
12	0.064	0.064	0.064	0.064	0.064	0.064	12
18	0.064	0.064	0.064	0.064	0.064	0.064	12
24	0.064	0.064	0.064	0.064	0.064	0.064	12
30	0.064	0.064	0.064	0.064	0.064	0.064	12
36	0.064	0.064	0.064	0.064	0.064	0.064	12
42	0.064	0.064	0.064	0.064	0.064	0.064	12
48	0.064	0.064	0.064	0.064	0.064	0.064	12
54	0.079	0.079	0.079	0.079	0.079	0.079	12
60	0.109	0.109	0.109	0.109	0.109	0.109	12
66	0.138	0.138	0.138	0.138	0.138	0.138	12
72	0.138	0.138	0.138	0.138	0.138	0.138	12
78	0.168	0.168	0.168	0.168	0.168	0.168	12
84	0.168	0.168	0.168	0.168	0.168	0.168	12

TABLE 2-R

HELICAL CORRUGATED STEEL PIPE - 3" X 1" CORRUGATION

DIAMETER OF PIPE (INCHES)	MAX. DEPTH OF COVER ABOVE TOP OF PIPE (FEET)						MIN. CVR (INCHES)
	15	16-20	21-25	26-30	31-35	36-40	
	SPECIFIED WALL THICKNESS (INCH)						
54	0.064	0.064	0.064	0.064	0.064	0.064	12
60	0.064	0.064	0.064	0.064	0.064	0.064	12
66	0.064	0.064	0.064	0.064	0.064	0.064	12
72	0.064	0.064	0.064	0.064	0.064	0.079	12
78	0.064	0.064	0.064	0.064	0.064	0.079	12
84	0.064	0.064	0.064	0.064	0.079	0.079	12
90	0.064	0.064	0.064	0.064	0.079	0.079	12
96	0.079	0.079	0.079	0.079	0.079	0.079	12
102	0.079	0.079	0.079	0.079	0.109	0.109	18
108	0.109	0.109	0.109	0.109	0.109	0.109	18
114	0.109	0.109	0.109	0.109	0.109	0.109	18
120	0.109	0.109	0.109	0.109	0.109	0.109	18
126	0.109	0.109	0.109	0.109	0.109	0.109	18
132	0.138	0.138	0.138	0.138	0.138	0.138	18
138	0.138	0.138	0.138	0.138	0.138	0.138	18
144	0.168	0.168	0.168	0.168	0.168	0.168	18

TABLE 3-R

HELICAL CORRUGATED STEEL PIPE - 5" X 1" CORRUGATION

DIAMETER OF PIPE (INCHES)	MAX. DEPTH OF COVER ABOVE TOP OF PIPE (FEET)						MIN. CVR (INCHES)
	15	16-20	21-25	26-30	31-35	36-40	
	SPECIFIED WALL THICKNESS (INCH)						
54	0.064	0.064	0.064	0.064	0.064	0.064	12
60	0.064	0.064	0.064	0.064	0.064	0.064	12
66	0.064	0.064	0.064	0.064	0.064	0.079	12
72	0.064	0.064	0.064	0.064	0.064	0.079	12
78	0.064	0.064	0.064	0.064	0.079	0.079	12
84	0.064	0.064	0.064	0.079	0.079	0.109	12
90	0.064	0.064	0.064	0.079	0.079	0.109	12
96	0.079	0.079	0.079	0.079	0.109	0.109	12
102	0.079	0.079	0.079	0.079	0.109	0.109	18
108	0.109	0.109	0.109	0.109	0.109	0.109	18
114	0.109	0.109	0.109	0.109	0.109	0.138	18
120	0.109	0.109	0.109	0.109	0.109	0.138	18
126	0.138	0.138	0.138	0.138	0.138	0.138	18
132	0.138	0.138	0.138	0.138	0.138	0.138	18
138	0.138	0.138	0.138	0.138	0.138	0.138	18
144	0.168	0.168	0.168	0.168	0.168	0.168	18

NOTES: 1. BACKFILL AROUND PIPE MUST BE COMPACTED TO SPECIFIED AASHTO T-99 DENSITY OF 100%.
2. USE REASONABLE CARE IN HANDLING AND INSTALLATION.

TABLE 4-R

STEEL SPIRAL RIB PIPE - 3/4" X 3/4" X 7 1/2"

DIAMETER OF PIPE (INCHES)	MAX. DEPTH OF COVER ABOVE TOP OF PIPE (FEET)				MIN. CVR (INCHES)
	3/4" X 3/4" X 7 1/2" CORRUGATION				
	0.064	0.079	0.109	0.138	
24	87	95	158		12
30	54	75	126		12
36	45	63	105		12
42	38	54	90		12
48	*33	47	78	114	12
54	29	41	70	101	15
60		37	63	91	15
66		*34	57	83	18
72			52	76	18
78			48	70	21
84			*44	65	21
90				60	24
96				*56	24
102				*50	27

TABLE 5-R

STEEL SPIRAL RIB PIPE - 3/4" X 1" X 11 1/2"

DIAMETER OF PIPE (INCHES)	MAX. DEPTH OF COVER ABOVE TOP OF PIPE (FEET)			MIN. CVR (INCHES)
	3/4" X 1" X 11 1/2" CORRUGATION			
	0.064	0.079	0.109	
24	40	40	40	12
30	39	40	40	12
36	32	40	40	12
42	28	39	40	12
48	24	34	40	12
54	21	30	40	18
60		27	40	18
66		25	40	18
72		*22	38	18
78			35	24
84			33	24
90			*31	24

NOTES: 1. FOR TABLES 4-R AND 5-R, COVER LIMITS INDICATED WITH * ARE FOR TRENCH INSTALLATION ONLY. FOR EMBANKMENT CONDITIONS, USE NEXT HEAVIER GAGE IF AVAILABLE.

2. SEE "INSTALLATION AND BACKFILL OF SPIRAL RIB PIPE" SECTION OF "HANDBOOK OF STEEL DRAINAGE & HIGHWAY CONSTRUCTION PRODUCTS" BY AISI OF 1994 EDITION FOR MORE DETAILS ON INSTALLATION.

GAUGE	THICKNESS (INCHES)
1	0.280
3	0.249
5	0.218
7	0.188
8	0.168
10	0.138
12	0.109
14	0.079
16	0.064
18	0.052

NOTE:
GAUGES SHOWN ARE "US STANDARD GAUGE" FOR UNCOATED STEEL SHEETS AND PLATES. THICKNESS SHOWN IN INCHES INCLUDE GALVANIZED COATING.

R = ROUND PIPE

DESIGN DATA:

SPECIFICATIONS: AASHTO LRFD BRIDGE DESIGN SPECIFICATIONS SECTION 12, 2007 EDITION, WITH 2008 INTERIM REVISIONS.

DEAD LOAD: 120 POUNDS PER CUBIC FOOT EARTH.

LIVE LOAD: HL-93

SAFETY FACTORS: APPROXIMATELY, 3.0 FOR LONGITUDINAL SEAM STRENGTH 2.0, FOR PIPE WALL BUCKLING.

BACKFILL: SOIL STIFFNESS COEFFICIENT (k) = 0.22.

◆ DENOTES THAT THE FURNISHED TABLE IS STILL BASED ON DESIGN SPECIFICATION OF LFD, NOT LRFD YET.

GENERAL NOTES:

1. WHERE ABRASIVE OR CORROSIVE CONDITIONS EXIST, A HEAVIER WALL THICKNESS OR A PROTECTIVE COATING MAY BE REQUIRED. SEE SECTION 570 OF SPECIFICATIONS FOR CORROSION RESISTANCE NUMBER.
2. THE CONTRACTOR MAY FURNISH A HEAVIER WALL THICKNESS THAN THE MINIMUM SHOWN IN THE TABLES AT NO ADDITIONAL COST TO THE DEPARTMENT.
3. ALL PIPES SHALL BE PROTECTED BY A COVER OF AT LEAST 4 FEET BEFORE PERMITTING HEAVY CONSTRUCTION EQUIPMENT TO PASS OVER THEM DURING CONSTRUCTION.
4. MINIMUM COVERS SHOWN IN THE TABLES SHALL BE MEASURED FROM THE TOP OF THE PIPE TO THE BOTTOM OF THE THE FLEXIBLE PAVEMENT OR TO THE TOP OF THE RIGID PAVEMENT. FOR MINIMUM COVERS, A MINIMUM 6" CUSHION OF BACKFILL MATERIAL SHALL BE PROVIDED BETWEEN THE BOTTOM OF THE RIGID PAVEMENT AND THE TOP OF THE PIPE.
5. ALL STEEL CORRUGATED METAL AND AND STRUCTURAL PLATE SHALL CONFORM TO AASHTO SPECIFICATION M-36 AND M-167.
6. ALL PIPES ARE TO BE CAMBERED TO ACCOMMODATE SOIL SETTLEMENT AND CONSOLIDATION. THE AMOUNT OF CAMBER WILL DEPEND ON SOIL CHARACTERISTICS, COVER, LENGTH OF CULVERT, SLOPE, AND OTHER FACTORS AND SHALL BE APPROVED BY THE PROJECT MANAGER.
9. SEE 206-07-1/1 - CORRUGATED METAL CULVERT AND PIPE ARCHES BEDDING AND BACKFILL DETAILS FOR INSTALLATION.
10. SEE SECTION 570 PIPE CULVERT SPECIFICATIONS AND SECTION 571 STRUCTURAL PLATE STRUCTURES SPECIFICATIONS.
6. FOR PIPE SIZES NOT SHOWN, THE GAUGE WILL BE THAT REQUIRED BY THE MINIMUM AND MAXIMUM COVERS FOR THE NEXT LARGER TABULATED PIPE SIZE.
7. COVER HEIGHTS OVER 40 FEET SHALL BE USED ONLY AFTER A THOROUGH INVESTIGATION OF THE FOUNDATION MATERIALS.

◆ TABLE 6-R

STRUCTURAL PLATE PIPE - 6" X 2" CORRUGATION

DIAMETER OF PIPE (FEET)	MAX. DEPTH OF COVER ABOVE TOP OF PIPE (FEET)						MIN. CVR (INCHES)
	15	16-20	21-25	26-30	31-35	36-40	
	SPECIFIED WALL THICKNESS (INCH)						
5.0	0.111	0.111	0.111	0.111	0.111	0.111	12
5.5	0.111	0.111	0.111	0.111	0.111	0.111	12
6.0	0.111	0.111	0.111	0.111	0.111	0.111	12
6.5	0.111	0.111	0.111	0.111	0.111	0.111	12
7.0	0.111	0.111	0.111	0.111	0.111	0.111	12
7.5	0.111	0.111	0.111	0.111	0.111	0.111	12
8.0	0.111	0.111	0.111	0.111	0.111	0.111	12
8.5	0.111	0.111	0.111	0.111	0.111	0.111	18
9.0	0.111	0.111	0.111	0.111	0.111	0.111	18
9.5	0.111	0.111	0.111	0.111	0.111	0.111	18
10.0	0.111	0.111	0.111	0.111	0.111	0.111	18
10.5	0.111	0.111	0.111	0.111	0.111	0.140	18
11.0	0.111	0.111	0.111	0.111	0.111	0.140	18
11.5	0.111	0.111	0.111	0.111	0.111	0.140	18
12.0	0.111	0.111	0.111	0.111	0.111	0.140	18
12.5	0.111	0.111	0.111	0.111	0.111	0.140	24
13.0	0.111	0.111	0.111	0.111	0.111	0.140	24
13.5	0.111	0.111	0.111	0.111	0.140	0.140	24
14.0	0.111	0.111	0.111	0.111	0.140	0.140	24
14.5	0.111	0.111	0.111	0.111	0.140	0.140	24
15.0	0.111	0.111	0.111	0.140	0.140	0.140	24
15.5	0.111	0.111	0.111	0.140	0.140	0.170	24
16.0	0.111	0.111	0.111	0.140	0.140	0.170	24
16.5	0.140	0.140	0.140	0.140	0.140	0.170	30
17.0	0.140	0.140	0.140	0.140	0.140	0.170	30
17.5	0.140	0.140	0.140	0.140	0.140	0.170	30
18.0	0.140	0.140	0.140	0.140	0.140	0.170	30
18.5	0.170	0.170	0.170	0.170	0.170	0.170	30
19.0	0.170	0.170	0.170	0.170	0.170	0.188	30
19.5	0.170	0.170	0.170	0.170	0.170	0.188	30
20.0	0.170	0.170	0.170	0.170	0.170	0.188	30
20.5	0.188	0.188	0.188	0.188	0.188	0.218	36
21.0	0.188	0.188	0.188	0.188	0.188	0.218	36
21.5	0.218	0.218	0.218	0.218	0.218	0.218	36
22.0	0.218	0.218	0.218	0.218	0.218	0.249	36
22.5	0.218	0.218	0.218	0.218	0.218	0.249	36
23.0	0.218	0.218	0.218	0.218	0.218	0.249	36
23.5	0.249	0.249	0.249	0.249	0.249	0.249	36
24.0	0.249	0.249	0.249	0.249	0.249	0.280	42
24.5	0.249	0.249	0.249	0.249	0.249	0.280	42
25.0	0.280	0.280	0.280	0.280	0.280	0.280	42
25.5	0.280	0.280	0.280	0.280	0.280	0.280	42
26.0	0.280	0.280	0.280	0.280	0.280	0.280	42

NOTES: 1. BACKFILL AROUND PIPE MUST BE COMPACTED TO SPECIFIED AASHTO T-99 DENSITY OF 100%.
2. USE REASONABLE CARE IN HANDLING AND INSTALLATION.

TIMOTHY A. MARRS
NEW MEXICO
14072
REGISTERED PROFESSIONAL ENGINEER
11-17-14

DATE	BY	DESCRIPTION

REVISIONS (OR CHANGE NOTICES)

NEW MEXICO
DEPARTMENT OF TRANSPORTATION
STANDARD DRAWING

MAXIMUM AND MINIMUM COVER
STEEL-ROUND PIPES
HELICAL CORRUGATED METAL
AND
STRUCTURAL PLATES

DESIGNED BY: DRAWN BY: SKL CHECKED BY: YML/TM
206-03-1/1 1 of 1

No.	Date	REVISIONS	By

Designed By: JAW DATE: 07/2014
Drawn By: LAH DATE: 07/2014
Checked By: JAW DATE: 07/2014

Bohannan Huston
www.bhinc.com 800.877.5332

CITY OF SANTA FE
SANTA FE RIVER TRAIL
CONNECTIONS AND IMPROVEMENTS, PHASE 1
CAMINO DE CHELLY / AGUA FRIA TO CAMINO DEL CAMPO

STANDARD DETAILS

CN: S100280

Sheet 12-2

P:\20140268\TRANS\Design\Plan Production\Plans\20140268-Serials.dwg
Thu, 13-Nov-2014 - 1:02:pm, Plotted by: LAHINDE

TABLE 14–R

HELICAL CORRUGATED ALUMINUM PIPE
2 2/3" x 1/2" CORRUGATION

PIPE DIAM. (INCHES)	MINIMUM COVER – INCHES					MAXIMUM COVER – FEET				
	*16Ga .060"	*14Ga .075"	*12Ga .105"	*10Ga .135"	* 8Ga .164"	*16Ga .060"	*14Ga .075"	*12Ga .105"	*10Ga .135"	* 8Ga .164"
12	12	12				125	157			
15	12	12				100	125			
18	12	12				83	104			
21	12	12				71	89			
24	12	12	12			62	78	109		
30	12	12	12				62	87		
36		12	12	12			51	73	94	
42			12	12				62	80	
48	—	—	12	12	12	—	—	54	70	85
54	—	—	15	15	15	—	—	48	62	76
60	—	—	15	15	15	—	—	—	52	64
66	—	—	—	—	18	—	—	—	—	52
72	—	—	—	—	18	—	—	—	—	43

TABLE 15–R

HELICAL CORRUGATED ALUMINUM PIPE
3" x 1" CORRUGATION

PIPE DIAM. (INCHES)	MINIMUM COVER – INCHES					MAXIMUM COVER – FEET				
	*16Ga .060"	*14Ga .075"	*12Ga .105"	*10Ga .135"	* 8Ga .164"	*16Ga .060"	*14Ga .075"	*12Ga .105"	*10Ga .135"	* 8Ga .164"
30	12	12	12	12	12	57	72	101	135	159
36	12	12	12	12	12	47	60	84	112	132
42	12	12	12	12	12	40	51	72	96	113
48	12	12	12	12	12	35	44	62	84	99
54	15	15	15	15	15	31	39	55	74	88
60	15	15	15	15	15	28	35	50	67	79
66	18	18	18	18	18	25	32	45	61	72
72	18	18	18	18	18	23	29	41	56	66
78	—	21	21	21	21	—	27	38	51	61
84	—	—	21	21	21	—	—	35	48	56
90	—	—	24	24	24	—	—	33	44	52
96	—	—	24	24	24	—	—	31	41	49
102	—	—	—	24	24	—	—	—	39	46
108	—	—	—	24	24	—	—	—	37	43
114	—	—	—		24	—	—	—	—	39
120	—	—	—		24	—	—	—	—	36

TABLE 16–R

ALUMINUM SPIRAL RIB PIPE – 3/4" X 3/4" X 7 1/2"

DIAMETER OF PIPE (INCHES)	MAX. DEPTH OF COVER ABOVE TOP OF PIPE (FEET) 3/4" X 3/4" X 7 1/2" CORRUGATION				MIN. CVR (INCHES)
	*16Ga	*14Ga	*12Ga	*10Ga	
24	33	45	73		12
30	26	36	58		15
36	** 21	30	49	69	18
42		** 25	41	59	21
48			36	51	24
54			32	46	24
60			** 29	41	24
66				37	24
72				**34	27

NOTES: COVER LIMITS INDICATED WITH ** ARE FOR TRENCH INSTALLATION ONLY. FOR EMBANKMENT CONDITIONS, USE NEXT HEAVIER GAGE.

* INDICATES WALL THICKNESS

◐ TABLE 17–R

9" x 2 1/2" CORRUGATIONS, STRUCTURAL PLATE – BOLTED

PIPE DIAM. (INCHES)	MINIMUM COVER – INCHES PLATE THICKNESS		MAXIMUM COVER – FEET PLATE THICKNESS					
	.125"	.150" to .250"	.125"	.150"	.175"	.200"	.225"	.250"
60	12	12	45	60	70	81	92	103
66	12	12	41	54	64	74	84	94
72	12	12	38	50	59	68	77	86
78	12	12	35	46	54	62	71	79
84	12	12	32	42	50	58	66	73
90	12	12	30	40	47	54	61	69
96	12	12	28	37	44	51	57	64
102	13	13	26	35	41	48	54	60
108	14	14	25	33	39	45	51	57
114	15	15	24	31	37	42	48	54
120	15	15	22	30	35	40	46	51
132	17	17	20	27	32	37	42	47
144	18	18	19	25	29	34	38	43
156	20	20	17	23	27	31	35	39
168	—	21	—	21	25	29	33	36
180	—	23	—	—	23	27	30	34
192	—	24	—	—	—	25	28	32
204	—	26	—	—	—	24	27	30
216	—	27	—	—	—	—	25	28
225	—	29	—	—	—	—	—	27
240	—	—	—	—	—	—	—	—
252	—	—	—	—	—	—	—	—

◐ DENOTES THAT THE FURNISHED TABLE IS STILL BASED ON DESIGN SPECIFICATION OF LFD, NOT LRFD YET.

R = ROUND PIPE

GENERAL NOTES:

1. WHERE ABRASIVE OR CORROSIVE CONDITIONS EXIST, A HEAVIER GAUGE METAL OR A PROTECTIVE COATING MAY BE REQUIRED.
2. THE CONTRACTOR MAY FURNISH A HEAVIER GAUGE METAL THAN THE MINIMUM SHOWN IN THE TABLES AT NO ADDITIONAL COST TO THE DEPARTMENT.
3. ALL PIPES SHALL BE PROTECTED BY A COVER OF AT LEAST 4 FEET BEFORE PERMITTING HEAVY CONSTRUCTION EQUIPMENT TO PASS OVER THEM DURING CONSTRUCTION.
4. MINIMUM COVERS SHOWN IN THE TABLES SHALL BE MEASURED FROM THE TOP OF THE PIPE TO THE BOTTOM OF THE FLEXIBLE PAVEMENT OR TO THE TOP OF THE RIGID PAVEMENT. FOR MINIMUM COVERS, A MINIMUM 6" CUSHION OF BACKFILL MATERIAL SHALL BE PROVIDED BETWEEN THE BOTTOM OF THE RIGID PAVEMENT AND THE TOP OF THE PIPE.
5. ALL ALUMINUM CORRUGATED METAL AND STRUCTURAL PLATE SHALL CONFORM TO AASHTO SPECIFICATION M–196 AND M–219.
6. FOR PIPE SIZES NOT SHOWN, THE GAUGE WILL BE THAT REQUIRED BY THE MINIMUM AND MAXIMUM COVERS FOR THE NEXT LARGER TABULATED PIPE SIZE.
7. FILL COVERS OVER 40' SHALL BE USED ONLY AFTER A THOROUGH INVESTIGATION OF THE FOUNDATION MATERIALS.
8. ANY PIPE OF A SIZE AND GAUGE WHICH FALL BELOW THE HEAVY LINE IN THE TABLES MUST BE REVIEWED BY THE BRIDGE ENGINEER FOR POSSIBLE APPROVAL.
9. FOR ALUMINUM PIPES, GALVANIZED STEEL BOLTS SHALL BE USED ON ALL STRUCTURAL PLATE. THE USE OF ALUMINUM BOLTS WILL REQUIRE THE APPROVAL OF THE BRIDGE ENGINEER.
10. PIPES IN TABLE 10–R, SMALLER THAN 42" DIAMETER, MAY BE HELICAL, OR DOUBLE RIVETED. PIPE IN TABLE 10–R, 42" IN DIAMETER OR GREATER, MUST BE HELICAL.
11. ALL PIPES ARE TO BE CAMBERED TO ACCOMMODATE SOIL SETTLEMENT AND CONSOLIDATION. THE AMOUNT OF CAMBER WILL DEPEND ON SOIL CHARACTERISTICS, COVER, LENGTH OF CULVERT, SLOPE, AND OTHER FACTORS AND SHALL BE APPROVED BY THE PROJECT MANAGER.
12. SEE SERIAL 206–07–1/1 FOR INSTALLATION DETAILS.
13. GAUGES SHOWN ARE U.S. STANDARD GAUGES.

DESIGN DATA:

SPECIFICATIONS: AASHTO LRFD BRIDGE DESIGN SPECIFICATIONS, SECTION 12, 2007 EDITION, WITH 2008 INTERIM REVISIONS.

DEAD LOAD: 120 POUNDS PER CUBIC FOOT EARTH.

LIVE LOAD: HL–93

SAFETY FACTORS: APPROXIMATELY, 3.0 FOR LONGITUDINAL SEAM STRENGTH, 2.0 FOR PIPE WALL BUCKLING.

BACKFILL: SOIL STIFFNESS COEFFICIENT (k) = 0.22

TIMOTHY A. MARRS
NEW MEXICO
14072
REGISTERED PROFESSIONAL ENGINEER
11-10-12

	DATE	BY	DESCRIPTION

REVISIONS (OR CHANGE NOTICES)

NEW MEXICO
DEPARTMENT OF TRANSPORTATION
STANDARD DRAWING

MAXIMUM AND MINIMUM COVER
ALUMINUM ROUND
HELICAL CORRUGATED METAL
AND
STRUCTURAL PLATES

DESIGNED BY: DRAWN BY: SKL CHECKED BY: YML/TM

206–05–1/1 1 of 1

No.	Date	REVISIONS	By

Designed By: JAW DATE: 07/2014
Drawn By: LAH DATE: 07/2014
Checked By: JAW DATE: 07/2014

Bohannan Huston
www.bhinc.com 800.877.5332

CITY OF SANTA FE
SANTA FE RIVER TRAIL
CONNECTIONS AND IMPROVEMENTS, PHASE 1
CAMINO DE CHELLY / AGUA FRIA TO CAMINO DEL CAMPO

STANDARD DETAILS

CN: S100280

Sheet 12-3

P:\20140268\TRANS\Design\Plan Production\Plans\20140268–Serials.dwg
Thu, 13–Nov–2014 – 1:03:pm, Plotted by: LAHINDE

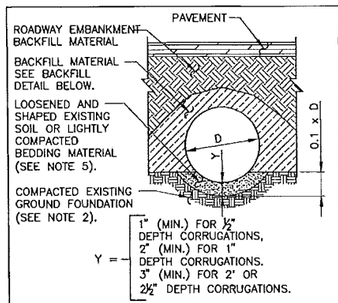

SUITABLE EXISTING GROUND FOUNDATION

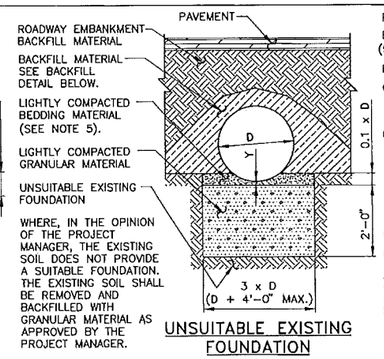

UNSUITABLE EXISTING FOUNDATION

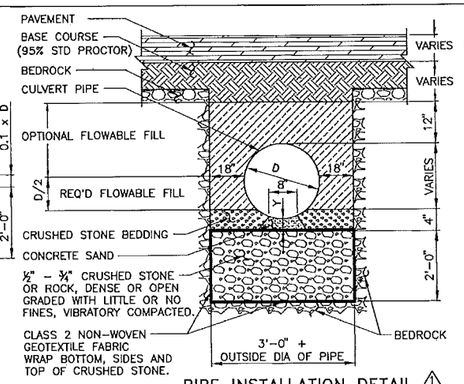

PIPE INSTALLATION DETAIL ⚠
(FOR BEDROCK EXCAVATION ONLY)

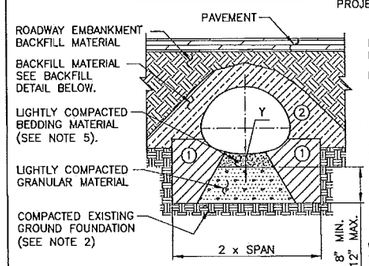

SUITABLE EXISTING GROUND FOUNDATION

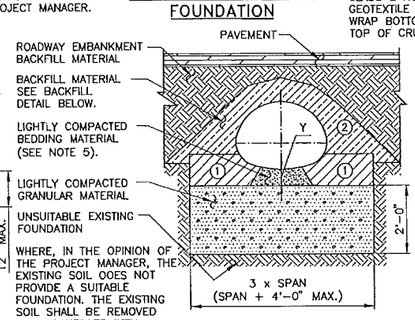

UNSUITABLE EXISTING FOUNDATION

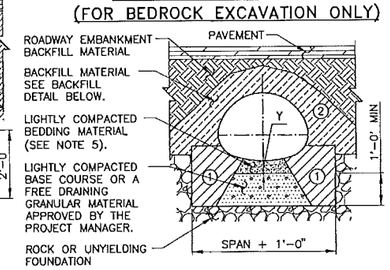

ROCK OR UNYIELDING FOUNDATION

GENERAL NOTES:

1. RIVETED OR WELDED METAL PIPE AND ARCHES SHALL BE PLACED WITH THE INSIDE CIRCUMFERENTIAL LAPS POINTING DOWNSTREAM AND WITH LONGITUDINAL LAPS AT THE SIDE ON QUARTER POINTS, NOT TOP OR BOTTOM. STRUCTURAL PLATE AND PIPE ARCH CULVERTS SHALL BE ERECTED AS SHOWN ON THE ERECTION DIAGRAMS FURNISHED BY THE SUPPLIER.
2. THE EXISTING GROUND FOUNDATION MATERIAL UNDER PIPES SHALL BE BROKEN UP AND COMPACTED TO A MINIMUM DEPTH OF 6". COMPACTION SHALL BE 95% OF MAXIMUM DENSITY BY AASHTO SPECIFICATION T-99.
3. WHERE AN UNSUITABLE MATERIAL (PEAT, MUCK, ETC.) IS ENCOUNTERED AT OR BELOW THE INVERT ELEVATION. THE NECESSARY SUBSURFACE EXPLORATION AND ANALYSIS SHALL BE MADE AND CORRECTIVE TREATMENT SHALL BE AS DIRECTED BY THE PROJECT MANAGER.
4. IMPERVIOUS MATERIAL SHALL BE PLACED LONGITUDINALLY ALONG THE PIPE TO THE ELEVATIONS AND LIMITS SHOWN ON THE "CROSS SECTION OF ROADWAY EMBANKMENT," AND TRANSVERSELY AROUND THE PIPE TO THE DENSITY AND SLOPES SHOWN FOR BACKFILL MATERIAL ON THE "BACKFILL DETAIL." UNLESS OTHERWISE DESIGNATED ON THE PLANS OR DIRECTED BY THE PROJECT MANAGER IMPERVIOUS MATERIAL SHALL CONFORM TO AASHTO SPECIFICATION A-6 OR A-7 SOILS.
5. BEDDING MATERIAL SHALL BE ROUGHLY SHAPED TO FIT BOTTOM OF PIPES AND THEN LIGHTLY COMPACTED. MATERIAL SHALL CONFORM TO SECTION 206 OF THE NEW MEXICO DEPARTMENT OF TRANSPORTATION STANDARD SPECIFICATIONS. FOR PIPE ARCH, THE WIDTH OF THE BEDDING SHALL NOT EXCEED THE WIDTH OF THE BOTTOM ARC.
6. WHERE MULTIPLE LINES OF PIPE OR PIPE ARCHES GREATER THAN 4'-0" IN DIAMETER OR SPAN ARE USED, THEY SHALL BE SPACED SO THAT ADJACENT SIDES OF THE PIPE SHALL BE AT LEAST ONE-HALF DIAMETER OR 3'-0" APART, WHICHEVER IS LESS, TO PERMIT ADEQUATE COMPACTION OF BACKFILL MATERIAL. FOR DIAMETERS 4'-0" AND LESS, THE MINIMUM SPACING SHALL BE NOT LESS THAN 2'-0". SEE 570-02-1/2 OR 570-02-2/2 FOR FLARED END SECTIONS.
7. A CONTINUOUS CONCRETE CRADLE SHALL BE USED ONLY WHEN CALLED FOR ON THE PLANS.
8. BACKFILL MATERIAL SHALL CONFORM TO SECTION 206 OF THE NEW MEXICO DEPARTMENT OF TRANSPORTATION STANDARD SPECIFICATIONS. SPECIAL CARE SHALL BE TAKEN WHEN COMPACTING BACKFILL AT THE HUNCHES AND SIDES OF PIPES.
9. REFER TO 206-03-1/1 THRU 206-06-1/1 FOR TABLE OF MINIMUM AND MAXIMUM COVER AND CORRESPONDING GAUGE.

KEY	SYMBOL	DESCRIPTION
①		100% COMPACTION
②		90% COMPACTION

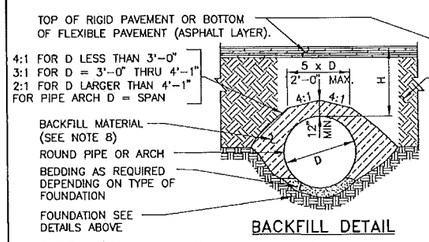

BACKFILL DETAIL

BACKFILL DETAIL SHOWN ABOVE SHALL NOT BE CONSTRUED AS RELIEVING THE CONTRACTOR OF HIS OBLIGATIONS REGARDING DAMAGE TO THE CULVERT PIPE. H = MINIMUM OR MAXIMUM COVER.

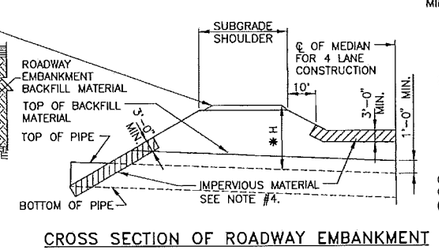

CROSS SECTION OF ROADWAY EMBANKMENT

✱ LOCATION OF MAXIMUM OR MINIMUM COVER DEPENDS ON PIPE SLOPE AND ROADWAY X-SECTION.

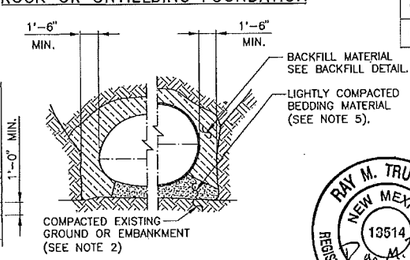

PIPE ARCHES ROUND PIPE

TRENCH CONDITION

RAY M. TRUJILLO
NEW MEXICO
13514
REGISTERED PROFESSIONAL ENGINEER
8/29/08

NO.	DATE	REV BY	DESCRIPTION
⚠	2/14/07	YML	REVISIONS TO BEDROCK DETAIL

REVISIONS (OR CHANGE NOTICES)

NEW MEXICO
DEPARTMENT OF TRANSPORTATION
STANDARD DRAWING

CORRUGATED METAL CULVERT AND PIPE ARCHES BEDDING AND BACKFILL DETAILS

DESIGNED BY ____ DRAWN BY SKL CHECKED BY TM/YML

206-07-1/1 1 OF 1

No.	Date	REVISIONS	By

Designed By: JAW DATE: 07/2014
Drawn By: LAH DATE: 07/2014
Checked By: JAW DATE: 07/2014

Bohannan Huston
www.bhinc.com 800.877.5332

CITY OF SANTA FE
SANTA FE RIVER TRAIL
CONNECTIONS AND IMPROVEMENTS, PHASE 1
CAMINO DE CHELLY / AGUA FRIA TO CAMINO DEL CAMPO

STANDARD DETAILS

CN: S100280

Sheet 12-4

P:\20140268\TRANS\Design\Plan Production\Plans\20140268-Serials.dwg
Thu, 13-Nov-2014 - 1:03:pm, Plotted by: LAHINDE

HDPE PLASTIC ROUND PIPE CULVERT

FILL HEIGHT TABLE AND MINIMUM CELL CLASSIFICATION NUMBER PER ASTM D 3350

(SOLID WALL, CORRUGATED AND RIBBED PIPE CULVERT)

SOLID WALL

PIPE SIZE	MNIMUM COVER	CELL CLASSIFICATION NUMBER 335434C						
		MINIMUM WALL THICKNESS IN INCHES						
DIAMETER INCHES	INCHES	0.607	0.857	0.923	1.154	1.385	1.292	1.477
		MAXIMUM FILL HEIGHT IN FEET						
12	12	57						
18	12		52					
24	12			38				
30	12				38			
36	12					38		
42	12						27	
48	12							27

CORRUGATED

PIPE SIZE	MNIMUM COVER	CELL CLASS NO. 324420C
DIAMETER INCHES	INCHES	MAXIMUM FILL HEIGHT IN FEET
12	12	10
15	12	10
18	12	10
24	12	10
30	12	10
36	12	10
42	12	10
48	12	10
54	24	10
60	24	10

RIBBED

PIPE SIZE	MINIMUM COVER	CELL CLASS NO. 334440C	CELL CLASS NO. 335434C
DIAMETER INCHES	INCHES	MAXIMUM FILL HEIGHT IN FEET	
18	12	18	24
24	12	22	28
30	12	22	28
36	12	25	31
42	12	21	27
48	12	21	26

PVC ROUND PIPE CULVERT

FILL HEIGHT TABLE AND MINIMUM CELL CLASSIFICATION NUMBER PER ASTM D 1784

(SOLID WALL, AND RIBBED PIPE CULVERT)

SOLID WALL

PIPE SIZE	MINIMUM COVER	CELL CLASS NO. 12454C		CELL CLASS NO. 12364C	
DIAMETER INCHES	INCHES	MINIMUM WALL THICKNESS IN INCHES			
		0.358	0.438	0.358	0.438
		MAXIMUM FILL HEIGHT IN FEET			
12	12	65		69	
15	12		62		66

RIBBED

PIPE SIZE	MINIMUM COVER	CELL CLASS NO. 12454C	CELL CLASS NO. 12364C
DIAMETER INCHES	INCHES	MAXIMUM FILL HEIGHT IN FEET	
12	12	37	26
15	12	32	22
18	12	33	23
24	12	29	21
30	12	28	20
36	12	27	19
42	12	26	18
48	12	24	17

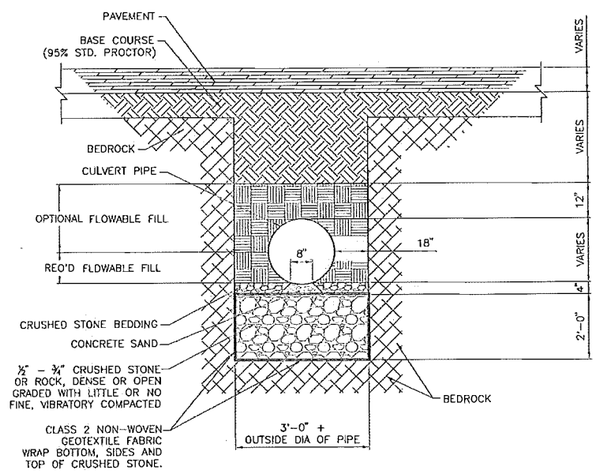

PIPE INSTALLATION DETAIL
(FOR BEDROCK EXCAVATION ONLY)

NOTES:

1. THE MIDDLE 8" OF THE BEDDING SAND SHOULD BE LOOSELY PLACED WITH THE REMINDER COMPACTED TO A MINIMUM OF 95% STANDARD PROCTOR DENSITY.
2. THE PIPE SHOULD BE ANCHORED DOWN PROPERLY TO PREVENT FLOATATION DURING FLOWABLE FILL PLACEMENT.

NOTES:

1. HDPE PIPE SHALL CONFORM TO ALL REQUIREMENTS OF AASHTO SPECIFICATION M 294. PVC PIPE SHALL CONFORM TO AASHTO M 304 & M 278.
2. WHEN DIRECTED, CAMBER PIPE CULVERTS UPWARD FROM A CHORD THROUGH THE INLET AND OUTLET INVERTS AN ORDINATE AMOUNT EQUAL TO 1% OF THE PIPE LENGTH. DEVELOP CAMBER ON A PARABOLIC CURVE. IF THE MIDPOINT ELEVATION ON THE PARABOLIC CURVE AS DESIGNED EXCEEDS THE ELEVATION OF THE INLET INVERT, REDUCE THE AMOUNT OF CAMBER OR INCREASE THE PIPE CULVERT GRADIENT.
3. MINIMUM COVERS SHOWN IN THE TABLES SHALL BE MEASURED FROM THE TOP OF THE PIPE TO THE BOTTOM OF THE FLEXIBLE PAVEMENT OR TO THE TOP OF THE RIGID PAVEMENT. FOR MINIMUM COVERS, A MINIMUM 6" CUSHION OF BACKFILL MATERIAL SHALL BE PROVIDED BETWEEN THE BOTTOM OF THE RIGID PAVEMENT AND THE TOP OF THE PIPE.
4. SEE STANDARD SERIAL 206-07-1/1 FOR BEDDING AND BACKFILL DETAILS. BEDDING AND BACKFILL SHALL MEET REQUIREMENTS OF AASHTO SECTION 30 AND ASTM D 2321.
5. SEE SECTION 206 OF THE NEW MEXICO DEPARTMENT OF TRANSPORTATION'S STANDARD SPECIFICATIONS FOR INFORMATION ON BEDDING MATERIAL. SEE ALSO SECTION 570 FOR CULVERT SPECIFICATIONS.

RAY M. TRUJILLO
NEW MEXICO
13514
3/14/11
REGISTERED PROFESSIONAL ENGINEER

	DATE	BY	DESCRIPTION
1	10/9/10	YML	GENERAL REVISIONS.

REVISIONS (OR CHANGE NOTICES)

NEW MEXICO
DEPARTMENT OF TRANSPORTATION
STANDARD DRAWING

FILL HEIGHTS
FOR
PLASTIC CULVERT PIPE
EXCAVATION DETAIL

DESIGNED BY: ___ DRAWN BY: SKL CHECKED BY: YML/TM

206-10-1/1 1 of 1

No.	Date	REVISIONS	By

Designed By:	JAW	DATE: 07/2014
Drawn By:	LAH	DATE: 07/2014
Checked By:	JAW	DATE: 07/2014

Bohannan Huston
www.bhinc.com 800.877.5332

CITY OF SANTA FE
SANTA FE RIVER TRAIL
CONNECTIONS AND IMPROVEMENTS, PHASE 1
CAMINO DE CHELLY / AGUA FRIA TO CAMINO DEL CAMPO

STANDARD DETAILS

CN: S100280

Sheet 12-5

P:\20140268\TRANS\Design\Plan Production\Plans\20140268-Serials.dwg
Thu, 13-Nov-2014 – 1:03:pm, Plotted by: LAHINDE

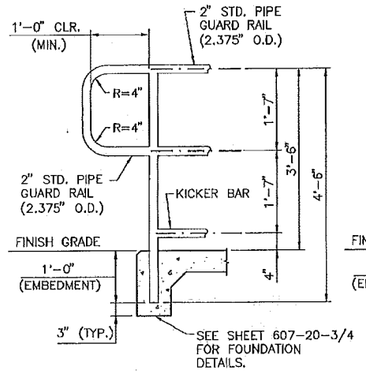

DETAIL @ RAIL END TYPE A

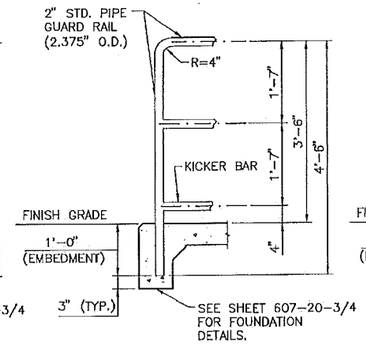

DETAIL @ RAIL END TYPE B

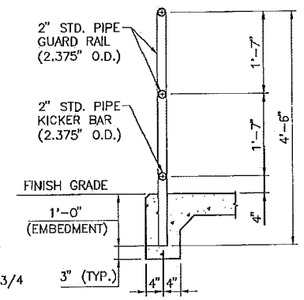

TYPICAL SECTION THRU RAIL

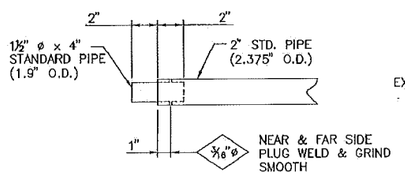

DETAIL @ EXPANSION JOINT INSERTS

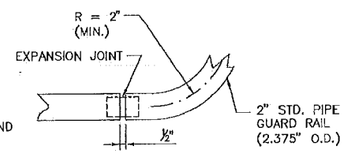

DETAIL OF RAIL TRANSITION AT HORIZONTAL CURVE (PLAN VIEW SHOWN)

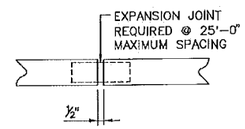

DETAIL @ EXP. JOINT

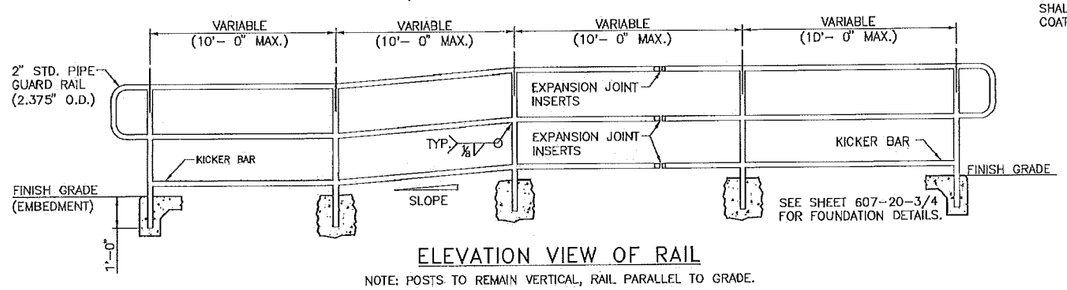

ELEVATION VIEW OF RAIL

NOTE: POSTS TO REMAIN VERTICAL, RAIL PARALLEL TO GRADE.

GENERAL NOTES:

1. DESIGN AND CONSTRUCTION SHALL CONFORM TO THE NEW MEXICO STATE DEPARTMENT OF TRANSPORTATION'S STANDARD SPECIFICATIONS FOR HIGHWAY AND BRIDGE CONSTRUCTION, CURRENT EDITION AND SUPPLEMENTAL SPECIFICATIONS AND SPECIAL PROVISIONS.
2. STEEL STRUCTURES SHALL CONFORM TO SECTION 541 – STEEL STRUCTURES OF THE STANDARD SPECIFICATIONS AND AASHTO M 270, GRADE 50. TUBING SHALL CONFORM TO ASTM A 500, GRADE B.
3. BOLTS, NUTS, AND WASHERS SHALL BE GALVANIZED TO MEET THE REQUIRMENTS OF AASHTO M 111 OR AASHTO M 298.
4. WELDING SHALL MEET THE REQUIREMENTS OF ANSI/AWS D 1.1 STRUCTURAL WELDING CODE, AND SECTION 541 OF THE STANDARD SPECIFICATIONS. ALL WELDS SHALL BE GROUND SO AS TO REMOVE ALL BURS OR PROTUBERANCES WHICH COULD TRAP FOREIGN MATERIALS OR CAUSE HARM TO A PEDESTRIAN.
5. THE FABRICATOR SHALL FURNISH TO THE BRIDGE ENGINEER SIX COPIES OF MILL TEST REPORTS OF ALL STRUCTURAL STEEL ITEMS, WELDING ELECTRODES, AND FLUX COMBINATIONS IN CONFORMANCE WITH SUBSECTION 541.3.2.1 OF THE STANDARD SPECIFICATIONS.
6. UNLESS OTHERWISE NOTED IN THE CONTRACT, THE PROJECT MANAGER SHALL SELECT EITHER TYPE A OR TYPE B RAILING ENDS, AND SCHEME 1 OR SCHEME 2 FOR FOUNDATIONS.
7. 1" STANDARD PIPE HANDRAIL SHALL BE USED FOR GRADES EQUAL TO OR EXCEEDING 5%. 1" STANDARD PIPE HANDRAIL SHALL BE USED FOR GRADES LESS THAN 5%, WHEN SPECIFIED IN THE PLANS.
8. POSTS SHALL BE VERTICAL. ALL RAILS SHALL BE PARALLEL TO EACH OHTER AND TO GRADE.
9. BREAKS IN VERTICAL ALIGNMENTS SHALL BE AT THE CENTER LINES OF THE VERTICAL POSTS.
10. CONCRETE SHALL BE CLASS "AA" AND SHALL BE INCLUDED IN THE BID PRICE FOR SIDEWALKS. IN INSTANCES WHERE THERE ARE NO SIDEWALKS, THE BID PRICE OF THE PEDESTRIAN RAILING INCLUDES THE COST OF CONCRETE TO SUPPORT THE POSTS.
11. RAIL POSTS SHALL BE CAST-IN-PLACE, OR SET IN OVERSIZED HOLES (3" IN DIAMETER) AND GROUTED AS OUTLINED IN SECTION 522 OR 523 OF THE STANDARDS SPECIFICATIONS.
12. AFTER GROUTING, THE CONTRACTOR SHALL SEAL THE JOINTS BETWEEN THE RAIL POSTS AND THE CONCRETE WITH SILICONE SEALANT APPROVED BY THE PROJECT MANAGER.
13. PAINTING AND/OR POWDER COATING OF STRUCTURAL STEEL SHALL CONFORM TO SECTION 545 OR SPECIAL PROVISIONS OF THE STANDARD SPECIFICATIONS. COLOR SHALL BE VERIFIED BY PROJECT MANAGER. REINFORCING BARS SHALL BE EPOXY COATED CONFORMING TO SECTION 540.

	DATE	BY	DESCRIPTION

REVISIONS (OR CHANGE NOTICES)

TIMOTHY A. MARES NEW MEXICO 14072 REGISTERED PROFESSIONAL ENGINEER
1-10-13

NEW MEXICO DEPARTMENT OF TRANSPORTATION STANDARD DRAWING

PEDESTRIAN RAILING WITHOUT HANDRAIL

DESIGNED BY: TM DRAWN BY: SKL CHECKED BY: YML/TM

607-20-1/4 1 of 4

No.	Date	REVISIONS	By

Designed By:	JAW	DATE: 07/2014
Drawn By:	LAH	DATE: 07/2014
Checked By:	JAW	DATE: 07/2014

Bohannan Huston
www.bhinc.com 800.877.5332

CITY OF SANTA FE
SANTA FE RIVER TRAIL
CONNECTIONS AND IMPROVEMENTS, PHASE 1
CAMINO DE CHELLY / AGUA FRIA TO CAMINO DEL CAMPO

STANDARD DETAILS

CN: S100280

Sheet 12-6

P:\20140268\TRANS\Design\Plan Production\Plans\20140268-Serials.dwg
Thu, 13-Nov-2014 – 1:03:pm, Plotted by: LAHINDE

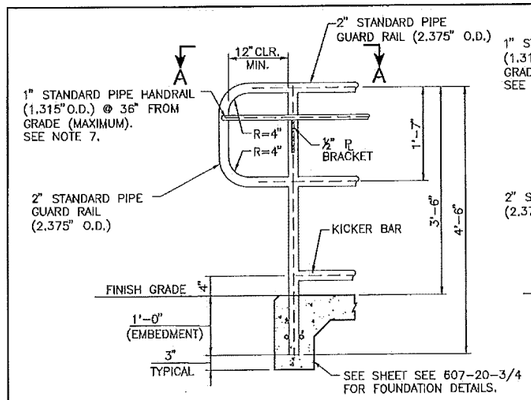

DETAIL @ RAIL END-TYPE A

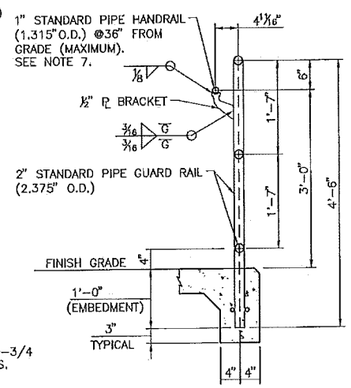

SECTION THRU RAIL

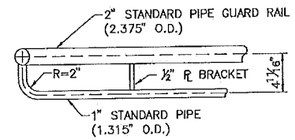

SECTION A-A

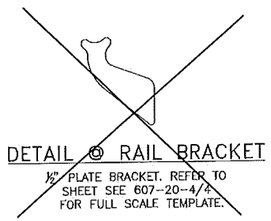

DETAIL @ RAIL BRACKET

½" PLATE BRACKET. REFER TO SHEET SEE 607-20-4/4 FOR FULL SCALE TEMPLATE.

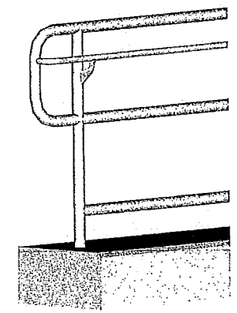

ISOMETRIC OF METAL RAILING END DETAIL

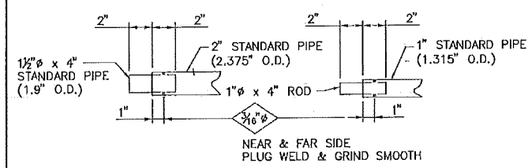

DETAIL @ EXPANSION JOINT INSERTS

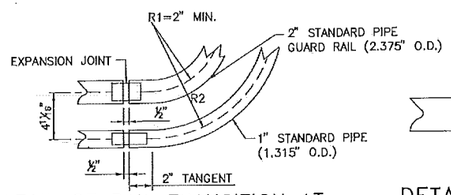

DETAIL OF RAIL TRANSITION AT HORIZONTAL CURVE (PLAN VIEW SHOWN)

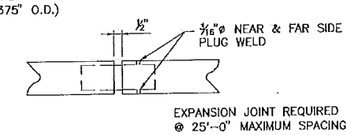

DETAIL @ EXPANSION JOINT

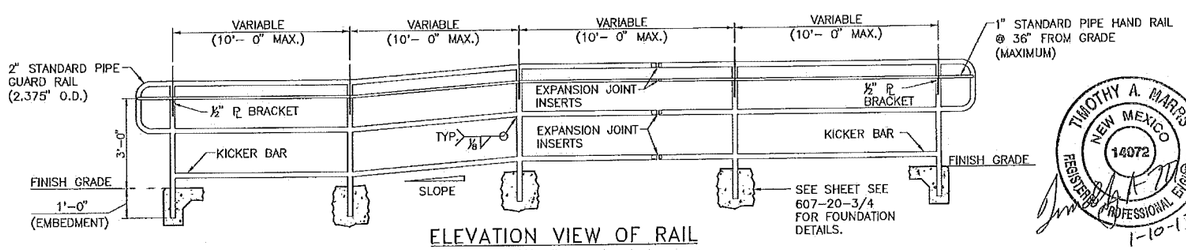

ELEVATION VIEW OF RAIL

NOTE: POSTS TO REMAIN VERTICAL, RAIL PARALLEL TO GRADE.

TIMOTHY A. MARRS NEW MEXICO 14072 REGISTERED PROFESSIONAL ENGINEER
1-10-13

DATE	BY	DESCRIPTION

REVISIONS (OR CHANGE NOTICES)

NEW MEXICO DEPARTMENT OF TRANSPORTATION STANDARD DRAWING

PEDESTRIAN RAILING WITH HANDRAIL

DESIGNED BY: TM DRAWN BY: SKL CHECKED BY: YML/TM

607-20-2/4 2 of 4

HANDRAIL DESIGN CRITERIA

FROM UNITED STATES ACCESS BOARD PROP9OSED GUIDELINES FOR PEDESTRIAN FACILITIES IN THE PUBLIC RIGHT-OF-WAY

R409.7.1 CIRCULAR CROSS SECTION. HANDRAIL GRIPPING SURFACES WITH A CIRCULAR CROSS SECTION SHALL HAVE AN OUTSIDE DIAMETER OF 32 MM (1.25 IN) MINIMUM AND 51 MM (2 IN) MAXIMUM.

R409.7.2 NON-CIRCULAR CROSS SECTIONS. HANDRAIL GRIPPING SURFACES WITH A NON-CIRCULAR CROSS SECTION SHALL HAVE A PERIMETER DIMENSION OF 100 MM (4 IN) MINIMUM AND 160 MM (6.25 IN) MAXIMUM, AND A CROSS-SECTION DIMENSION OF 57 MM (2.25 IN) MAXIMUM.

FIGURE R409.7.2 NON-CIRCULAR CROSS SECTIONS

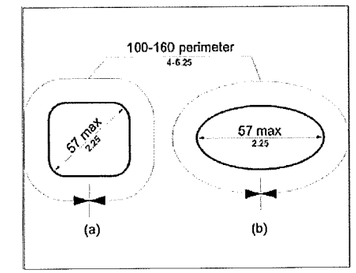

R409.6 GRIPPING SURFACE. HANDRAIL GRIPPING SURFACES SHALL BE CONTINUOUS ALONG THEIR LENGTH AND SHALL NOT BE OBSTRUCTED ALONG THEIR TOPS OR SIDES. THE BOTTOMS OF HANDRAIL GRIPPING SURFACES SHALL NOT BE OBSTRUCTED FOR MORE THAN 20 PERCENT OF THEIR LENGTH. WHERE PROVIDED, HORIZONTAL PROJECTIONS SHALL OCCUR 38 MM (1.5 IN) MINIMUM BELOW THE BOTTOM OF THE HANDRAIL GRIPPING SURFACE.

No.	Date	REVISIONS	By

Designed By:	JAW	DATE: 07/2014
Drawn By:	LAH	DATE: 07/2014
Checked By:	JAW	DATE: 07/2014

Bohannan Huston
www.bhinc.com 800.877.5332

CITY OF SANTA FE
SANTA FE RIVER TRAIL
CONNECTIONS AND IMPROVEMENTS, PHASE 1
CAMINO DE CHELLY / AGUA FRIA TO CAMINO DEL CAMPO

STANDARD DETAILS

CN: S100280

Sheet 12-7

P:\20140268\TRANS\Design\Plan Production\Plans\20140268-Serials.dwg
Thu, 13-Nov-2014 - 1:03:pm, Plotted by: LAHINDE

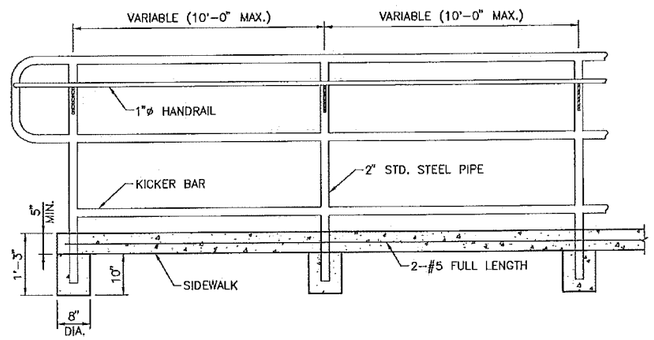

SCHEME # 2
(VIEW Y-Y)

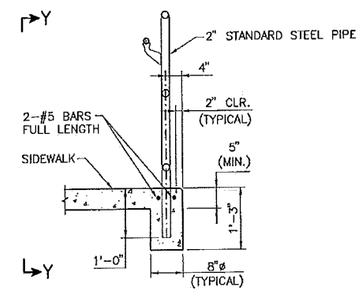

FOUNDATION SCHEME # 2
(FOR EDGE OF SIDEWALK INSTALLATION)

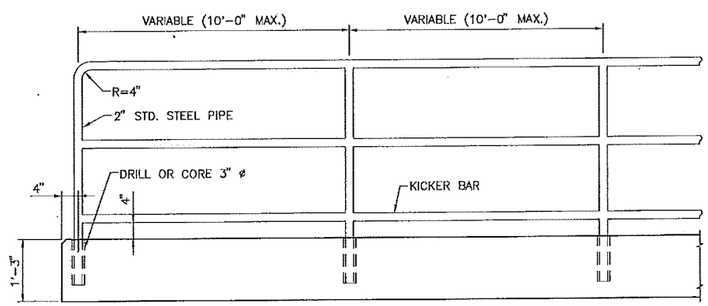

SCHEME # 1
(VIEW X-X)

NOTE: HANDRAILING OMITTED FROM VIEW. REFER TO GENERAL NOTE 7 ON DRAWING 607-20-1/4 WHEN HANDRAILING IS REQUIRED.

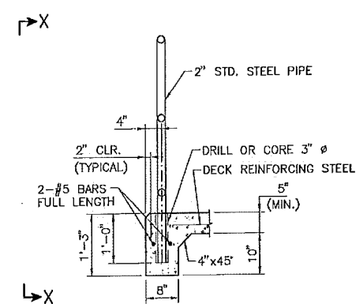

FOUNDATION SCHEME # 1
(FOR BRIDGE DECK OR EDGE OF SIDEWALK INSTALLATION)

TIMOTHY A. HARRIS
NEW MEXICO
14072
REGISTERED PROFESSIONAL ENGINEER
1-10-13

DATE	BY	DESCRIPTION

REVISIONS (OR CHANGE NOTICES)

NEW MEXICO
DEPARTMENT OF TRANSPORTATION
STANDARD DRAWING

PEDESTRIAN RAILING
FOUNDATION DETAILS

DESIGNED BY: TM DRAWN BY: SKL CHECKED BY: YML/TM
607-20-3/4 3 of 4

No.	Date	REVISIONS	By

Designed By:	JAW	DATE: 07/2014
Drawn By:	LAH	DATE: 07/2014
Checked By:	JAW	DATE: 07/2014

Bohannan Huston
www.bhinc.com 800.877.5332

CITY OF SANTA FE
SANTA FE RIVER TRAIL
CONNECTIONS AND IMPROVEMENTS, PHASE 1
CAMINO DE CHELLY / AGUA FRIA TO CAMINO DEL CAMPO

STANDARD DETAILS

CN: S100280

Sheet 12-8

P:\20140268\TRANS\Design\Plan Production\Plans\20140268-Serials.dwg
Thu, 13-Nov-2014 - 1:03:pm, Plotted by: LAHENDE

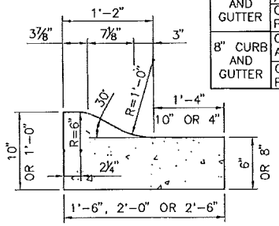

		1'-6"	2'-0"	2'-6"
6" CURB AND GUTTER	CROSS SECTION AREA, SQ. FT.	0.961	1.211	1.461
	CU. YD. VOLUME PER 100 LIN. FT.	3.559	4.485	5.411
8" CURB AND GUTTER	CROSS SECTION AREA, SQ. FT.	1.211	1.544	1.879
	CU. YD. VOLUME PER 100 LIN. FT.	4.485	5.719	6.955

CONCRETE MOUNTABLE CURB AND GUTTER TYPE "A"

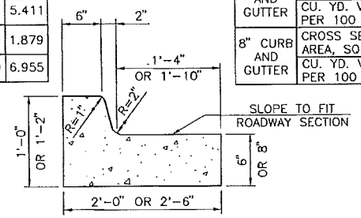

		2'-0"	2'-6"
6" CURB AND GUTTER	CROSS SECTION AREA, SQ. FT.	1.294	1.544
	CU. YD. VOLUME PER 100 LIN. FT.	4.791	5.717
8" CURB AND GUTTER	CROSS SECTION AREA, SQ. FT.	1.627	1.960
	CU. YD. VOLUME PER 100 LIN. FT.	6.026	7.261

CONCRETE BARRIER CURB AND GUTTER TYPE "B"

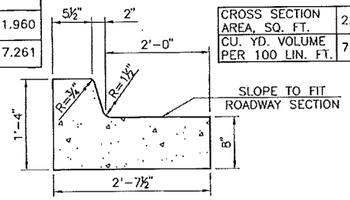

CROSS SECTION AREA, SQ. FT.	2.113
CU. YD. VOLUME PER 100 LIN. FT.	7.824

CONCRETE BARRIER CURB AND GUTTER TYPE "C"

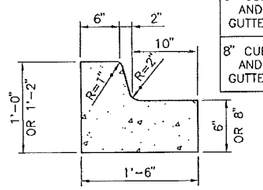

6" CURB AND GUTTER	CROSS SECTION AREA, SQ. FT.	1.044
	CU. YD. VOLUME PER 100 LIN. FT.	3.866
8" CURB AND GUTTER	CROSS SECTION AREA, SQ. FT.	1.294
	CU. YD. VOLUME PER 100 LIN. FT.	4.791

CONCRETE BARRIER CURB AND GUTTER TYPE "D"

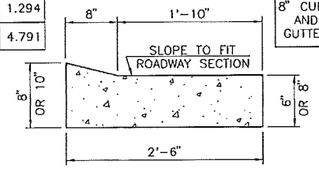

6" CURB AND GUTTER	CROSS SECTION AREA, SQ. FT.	1.306
	CU. YD. VOLUME PER 100 LIN. FT.	4.835
8" CURB AND GUTTER	CROSS SECTION AREA, SQ. FT.	1.722
	CU. YD. VOLUME PER 100 LIN. FT.	6.379

CONCRETE LAYDOWN CURB TYPE "E"

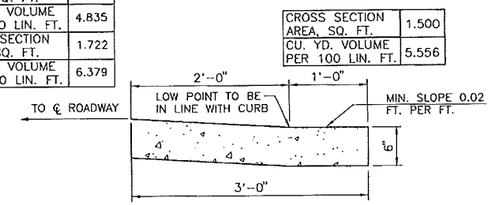

CROSS SECTION AREA, SQ. FT.	1.500
CU. YD. VOLUME PER 100 LIN. FT.	5.556

CONCRETE VALLEY GUTTER

GENERAL NOTES

1. CONCRETE SHALL BE STRUCTURAL CONCRETE CLASS "A."
2. END OF DAYS POUR, 30 MINUTE INTERRUPTIONS, COLD JOINTS AND DROP INLETS SHALL DETERMINE THE LOCATION OF A CONSTRUCTION JOINT AND A 3/4" PREMOLDED BITUMINOUS JOINT IS REQUIRED.
3. PLACE TRANSVERSE CONTRACTION JOINTS AT 5'-0" INTERVALS AND AT THE END OF RADIUS POINTS OR ISLAND NOSES.
4. BED COURSE MATERIAL ON WHICH SIDEWALK IS TO BE PLACED SHALL BE COMPACTED TO 95% OF MAXIMUM DENSITY AS DETERMINED BY AASHTO T 99, METHOD C.
5. EXCAVATION AND PREMOLDED BITUMINOUS EXPANSION JOINTS TO BE INCLUDED IN THE UNIT PRICE BID FOR SIDEWALKS.
6. THE SILICONE SEALED JOINTS SHALL BE SEALED IN ACCORDANCE WITH SECTION 452 OF THE STANDARD SPECIFICATIONS.
7. FOR SLIP-FORMED CURB AND GUTTER, FURNISH 1" SEALED EXPANSION JOINTS AT 90' INTERVALS, AND TRANSVERSE CONSTRUCTION JOINTS AT 5' INTERVALS.
8. FOR SIDEWALKS AND NON-SLIP FORMED CURB AND GUTTER, FURNISH 3/4" SEALED EXPANSION JOINTS AT 30' INTERVALS, AND TRANSVERSE CONTRACTION JOINTS AT 5' INTERVALS.

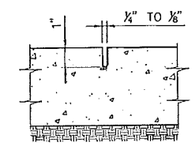

TRANSVERSE CONTRACTION JOINT

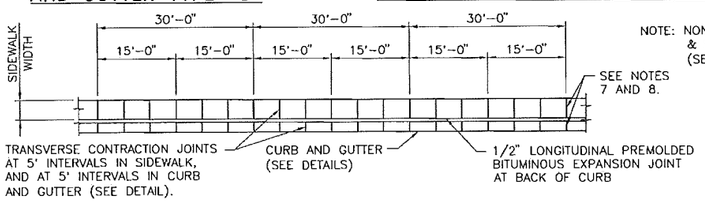

PLAN CURB AND GUTTER AND SIDEWALK

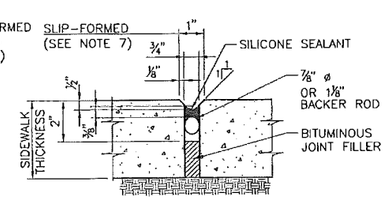

SEALED EXPANSION JOINT

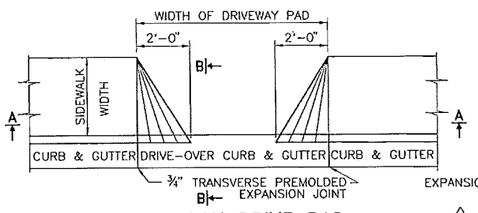

PLAN DRIVE PAD

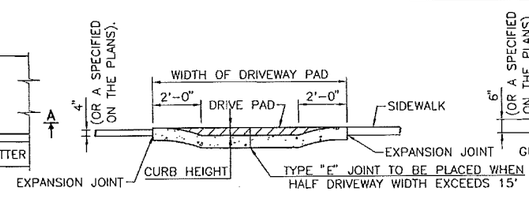

SECTION A-A

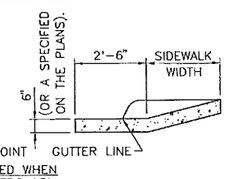

SECTION B-B

NO.	DATE	REV.BY	DESCRIPTION
1	9/9/09	YML	ADDED DETAILS

REVISIONS (OR CHANGE NOTICES)

NEW MEXICO
DEPARTMENT OF TRANSPORTATION
STANDARD DRAWING

SIDEWALK
CURB AND GUTTER

DESIGNED BY ____ DRAWN BY SKL CHECKED BY YML

609-01-1/1 1 of 1

RAY M. TRUJILLO NEW MEXICO 10214 REGISTERED PROFESSIONAL ENGINEER 11/16/09

No.	Date	REVISIONS	By

Designed By: JAW DATE: 07/2014
Drawn By: LAH DATE: 07/2014
Checked By: JAW DATE: 07/2014

Bohannan Huston
www.bhinc.com 800.877.5332

CITY OF SANTA FE
SANTA FE RIVER TRAIL
CONNECTIONS AND IMPROVEMENTS, PHASE 1
CAMINO DE CHELLY / AGUA FRIA TO CAMINO DEL CAMPO

STANDARD DETAILS

CN: S100280

Sheet 12-9

P:\20140268\TRANS\Design\Plan Production\Plans\20140268-Serials.dwg
Thu, 13-Nov-2014 - 1:03:pm, Plotted by: LAHINDE

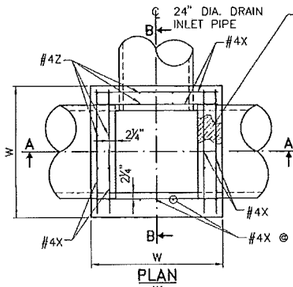

PLAN

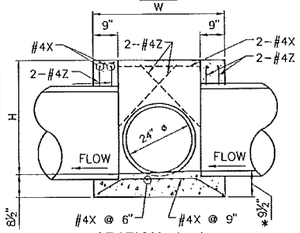

SECTION A-A

AVERAGE BOTTOM THICKNESS USE 8 1/2"
* AT OUTLET AND 9 1/2" AT INLETS.

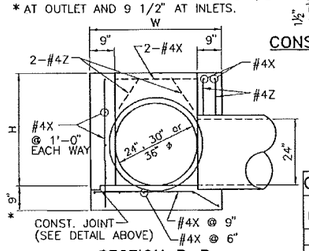

SECTION B-B

JUNCTION BOX DETAILS

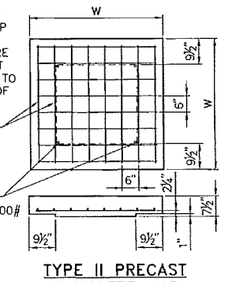

TYPE II PRECAST CONCRETE CAP

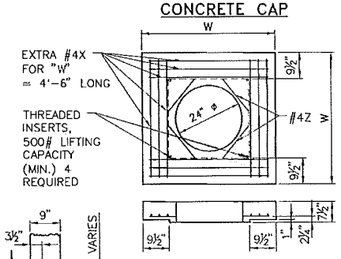

TYPE III PRECAST CONCRETE CAP

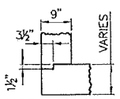

CONST. JOINT DETAIL

STRUCTURAL STEEL FOR URBAN USE (GRATE AND SEAT ANGLES W/ BOLTS)	STRUCTURAL STEEL FOR RURAL USE (GRATE AND SEAT ANGLES W/ BOLTS)
384 LBS.	359 LBS.

FOR CONTRACTOR'S INFORMATION ONLY.

CLASS "A" CONCRETE DEDUCTIONS (FOR ONE PIPE)

PIPE DIAMETER	9" WALL		7 1/2" PRECAST CONC. CAP	
	R.C. PIPE	C.M. PIPE	R.C. PIPE	C.M. PIPE
24"	.136 Cu.Yd.	.087 Cu.Yd.	.113 Cu.Yd.	.073 Cu.Yd.
30"	.207 Cu.Yd.	.136 Cu.Yd.	---------	---------
36"	.293 Cu.Yd.	.196 Cu.Yd.	---------	---------

FOR PIPES SKEWED INTO WALL, MULTIPLY DEDUCTION BY THE SECANT OF THE SKEW ANGLE.

DATA FOR JUNCTION BOX (FOR CONTRACTOR'S INFORMATION ONLY, NOT A BID ITEM)

REINFORCING STEEL QUANTITY AND LENGTH							ESTIMATED QUANTITIES			TYPE II PRECAST CONC.CAP EST.WT.	TYPE III PRECAST CONC.CAP EST.WT.
CROSS DRAIN PIPE DIAMETER	W	H	#4X		#4Z		CLASS "A" CONCRETE		REINF. STEEL		
			NO.	LENGTH	NO.	LENGTH	R.C. PIPE	C.M. PIPE			
24"	4'-0"	2'-11"	43	3'-9"	12	2'-3"	1.43 Cu.Yd.	1.58 Cu.Yd.	126 LBS.	1373 LBS.	914 LBS.
30"	4'-0"	3'-5"	43	3'-9"	12	2'-3"	1.47 Cu.Yd.	1.65 Cu.Yd.	126 LBS.	1373 LBS.	914 LBS.
36"	4'-6"	3'-11"	46	4'-3"	12	2'-6"	1.90 Cu.Yd.	2.15 Cu.Yd.	151 LBS.	1752 LBS.	1294 LBS.

NOTE: CONCRETE AND REINFORCING STEEL QUANTITIES INCLUDE TYPE II CAP AND DEDUCTIONS FOR CONCRETE INLET PIPE AND CROSSDRAIN PIPE.

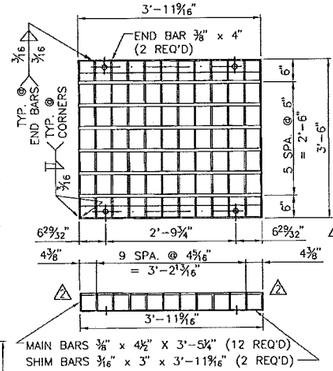

URBAN USE

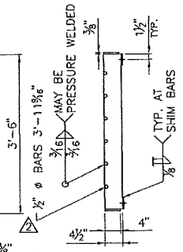

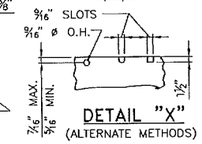

DETAIL "X"
(ALTERNATE METHODS)

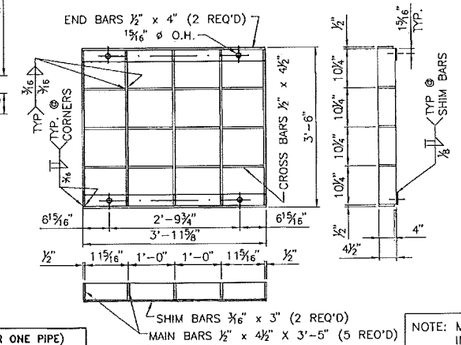

RURAL USE

GRATING DETAILS

NOTE: MEDIAN DROP INLETS, COMPLETE IN PLACE, WILL BE PAID FOR AT THE UNIT PRICE BID PER EACH.

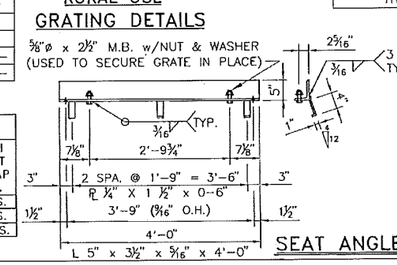

SEAT ANGLE DETAILS

GENERAL NOTES

1. WORKMANSHIP AND MATERIALS SHALL CONFORM TO THE NEW MEXICO DEPARTMENT OF TRANSPORTATION STANDARD SPECIFICATION FOR HIGHWAY AND BRIDGE CONSTRUCTION, CURRENT EDITION.
2. ALL CONCRETE SHALL BE CLASS "A". CHAMFER EXPOSED EDGES OF CONCRETE 3/4" UNLESS OTHERWISE NOTED ON THE DETAILS.
3. REINFORCING BARS SHALL CONFORM TO A.A.S.H.T.O. SPECIFICATION M 31, GRADE 60. DIMENSIONS REFER TO THE CENTERLINE OF BAR UNLESS OTHERWISE NOTED ON THE DETAILS.
4. STRUCTURAL STEEL SHALL CONFORM TO A.A.S.H.T.O. SPECIFICATION M 183 AND SHALL BE GIVEN A PROTECTIVE COATING IN CONFORMANCE WITH THE SPECIFICATIONS.
5. DROP INLETS MAY BE USED WITH EITHER R.C.P. OR C.M.P. R.C.P. IS SHOWN IN THE DETAILS..
6. QUANTITIES SHOWN ARE FOR INFORMATION ONLY.
7. INSTALLATIONS SHOWN ARE FOR DROP INLETS LOCATED WHERE THE MEDIAN DITCH LINE IS ON A CONTINUOUS SLOPE. IF THE DROP INLET IS LOCATED AT A LOW POINT IN THE MEDIAN DITCH LINE, NO DIKE WILL BE REQUIRED AND DETAILS FOR SLOPES SHOULD BE SHOWN ON THE UPGRADE SIDE. THE TOP OF THE INLET GRATE FOR ALL MEDIAN DROP INLETS SHALL BE SET AT AN ELEVATION THAT WILL PERMIT THE USE OF 6:1 OR FLATTER ROADWAY SLOPES OUTSIDE THE INLET GRATE. THE MEDIAN DITCH SHALL BE GRADED TO DRAIN TO THE DROP INLET.
8. THE URBAN GRATING DETAIL SHALL BE USED IN ALL CASES UNLESS NOTED ON THE PLANS AS ALTERNATE.

DRAWINGS REQUIRED

1. SERIAL 623-01-1/1: JUNCTION BOX, GRATES, NOTES, AND QUANTITIES.
2. SERIAL 623-02-1/1: DROP INLETS TYPE I AND II.
3. SERIAL 623-03-1/1: DROP INLET TYPE III.
4. ROADWAY DESIGN DRAWINGS: FOR TYPE, LOCATION, HEIGHT, AND NUMBER REQUIRED.

DESIGN DATA

DESIGN ACCORDING TO AASHTO SPECIFICATIONS CURRENT EDITION.
DESIGN STRESSES:
REINFORCED CONCRETE; f'c= 3,000 psi, fy= 60,000 psi, n= 10
STRUCTURAL STEEL; fs= 20,000 psi, fy= 36,000 psi
EARTH PRESSURE: 36 lb./cu.ft. EQUIV. FLUID PRESSURE, 2'-0" SURCHARGE.
LIVE LOAD ON URBAN GRATING: ONE 16,000 lbs. WHEEL PLUS 30% IMPACT.
LIVE LOAD ON RURAL GRATING: ONE 16,000 lbs. WHEEL PLUS 30% IMPACT, 35% OVERSTRESS.

NO.	DATE	REV.BY	DESCRIPTION
A	2/10/09	YML	MADE 1/2" DIA. BAR FROM 3'-11 3/16" TO 3'-11 9/16" & REMOVED 3/16" DIM.
A	2/11/09	YML	MADE GENERAL REVISIONS

REVISIONS (OR CHANGE NOTICES)

NEW MEXICO
DEPARTMENT OF TRANSPORTATION
STANDARD DRAWING

MEDIAN DROP INLET
JUNCTION BOX, GRATES,
NOTES, AND QUANTITIES

DESIGNED BY ____ DRAWN BY SKL CHECKED BY YML/TM

623-01-1/1 1 of 1

RAY M. TRUJILLO NEW MEXICO 13314 11/10/09 REGISTERED PROFESSIONAL ENGINEER

No.	Date	REVISIONS	By

Designed By: JAW DATE: 07/2014
Drawn By: LAH DATE: 07/2014
Checked By: JAW DATE: 07/2014

Bohannan Huston
www.bhinc.com 800.877.5332

CITY OF SANTA FE
SANTA FE RIVER TRAIL
CONNECTIONS AND IMPROVEMENTS, PHASE 1
CAMINO DE CHELLY / AGUA FRIA TO CAMINO DEL CAMPO

STANDARD DETAILS

CN: S100280

Sheet 12-10

P:\20140268\TRANS\Design\Plan Production\Plans\20140268-Serials.dwg
Thu, 13-Nov-2014 - 1:03:pm, Plotted by: LAHINDE

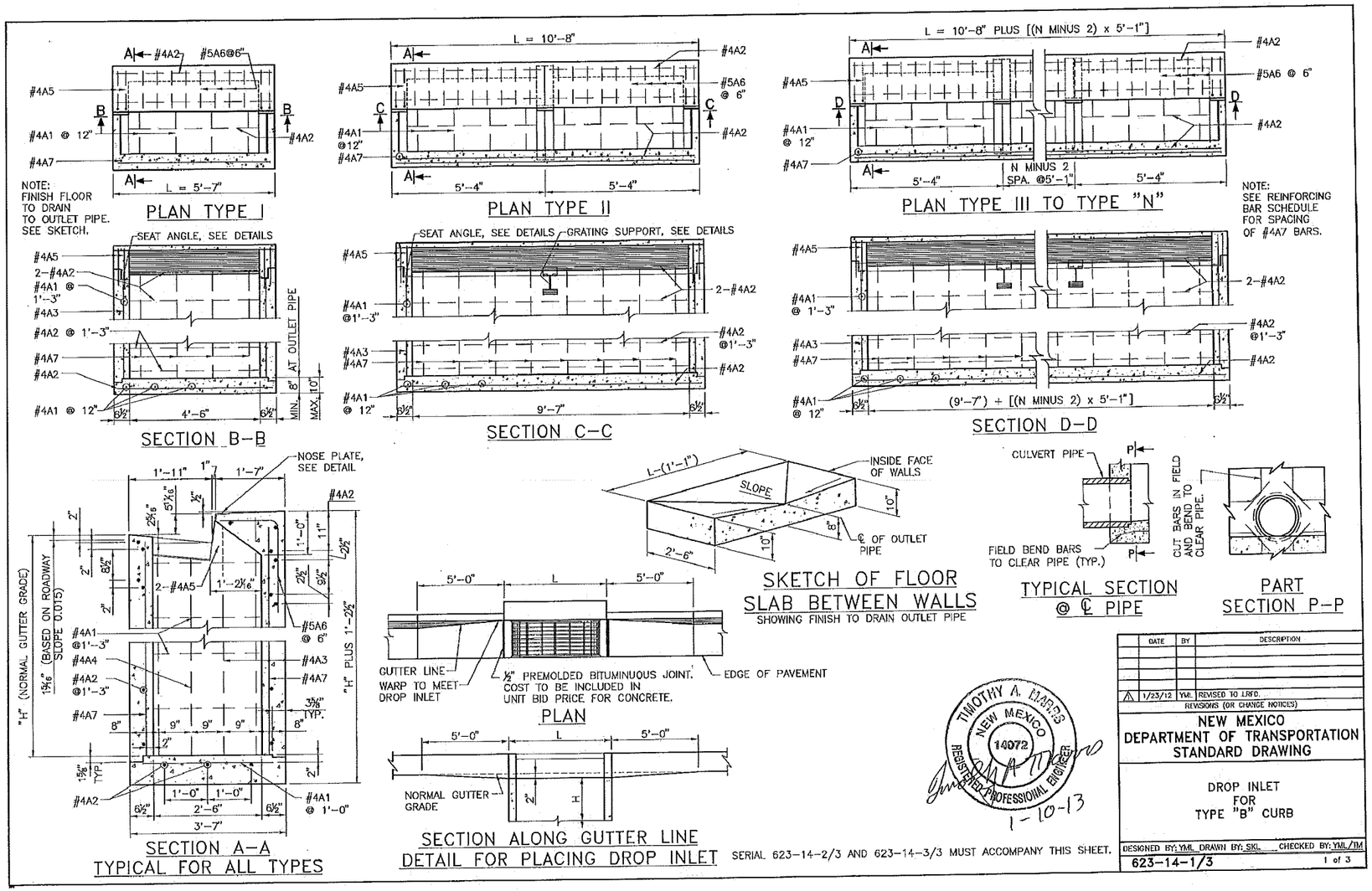

No.	Date	REVISIONS	By

Designed By: JAW DATE: 07/2014
Drawn By: LAH DATE: 07/2014
Checked By: JAW DATE: 07/2014

Bohannan Huston
www.bhinc.com 800.877.5332

CITY OF SANTA FE
SANTA FE RIVER TRAIL
CONNECTIONS AND IMPROVEMENTS, PHASE 1
CAMINO DE CHELLY / AGUA FRIA TO CAMINO DEL CAMPO

STANDARD DETAILS

CN: S100280

Sheet 12-11

P:\20140268\TRANS\Design\Plan Production\Plans\20140268-Serials.dwg
Thu, 13-Nov-2014 - 1:03:pm, Plotted by: LAHINDE

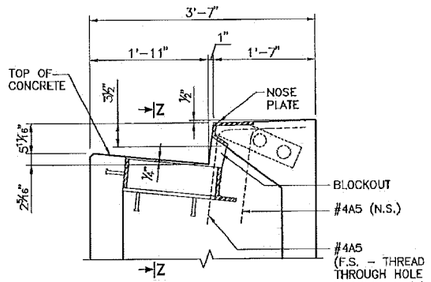

SECTION X-X

(SEE SHEET 3 OF 3)
(GRATE NOT SHOWN)

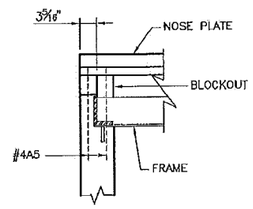

SECTION Z-Z

(GRATE NOT SHOWN)

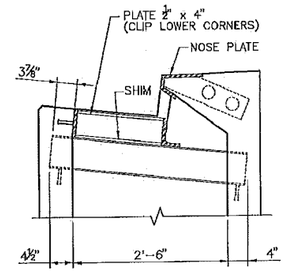

SECTION Y-Y

(SEE SHEET 3 OF 3)
(GRATE NOT SHOWN)

ESTIMATED QUANTITIES

TYPE	N	L	CLASS "A" CONC. † CU. YDS.	REINFORCING BARS – LBS. H = 8'-0" OR LESS	H = 8'-1" TO 10'-0"	H = 10'-0" TO 11'-6"	STRUCTURAL STEEL – LBS.
I	1	5'-7"	0.324H+0.698	23.870 H + 94.779	25.206 H + 95.448	35.894 H + 100.790	570
II	2	10'-8"	0.528H+1.357	37.319 H + 180.150	41.327 H + 182.185	58.185 H + 190.838	1186
III	3	15'-9"	0.732H+2.017	50.768 H + 265.518	57.448 H + 268.858	81.496 H + 280.882	1796
IV	4	20'-10"	0.936H+2.676	64.217 H + 350.887	73.569 H + 354.563	104.297 H + 370.927	2412
V	5	25'-11"	1.140H+3.335	77.662 H + 436.258	89.690 H + 442.270	127.098 H + 460.974	3022
VI	6	31'-0"	1.344H+3.995	91.115 H + 521.716	105.811 H + 526.974	149.899 H + 551.018	3631

† SEE TABLE FOR PIPE DEDUCTION
N = NUMBER OF GRATINGS PLACED IN DROP INLET
H = NORMAL GUTTER ELEVATION TO FLOW LINE ELEVATION OF OUTLET PIPE. USE H IN FEET.

CLASS "A" CONCRETE DEDUCTIONS FOR ONE PIPE

SIZE	CONCRETE PIPE	METAL PIPE
18"	0.06 CU. YDS.	0.04 CU. YDS.
24"	0.10 CU. YDS.	0.06 CU. YDS.
30"	0.15 CU. YDS.	0.10 CU. YDS.
36"	0.21 CU. YDS.	0.14 CU. YDS.
42"	0.28 CU. YDS.	0.19 CU. YDS.

NOTE:
DEDUCTIONS NOTED ARE FOR PIPES NORMAL TO WALLS. FOR SKEWED PIPES, MULTIPLY DEDUCTIONS BY SECANT OF SKEW ANGLE. FOR SMALLER PIPES OTHER THAN THOSE SHOWN IN TABLE, ADJUST DEDUCTIONS ACCORDINGLY.

REINFORCING BAR SCHEDULE

EMBED THIS LEG IN WALL — R= 3 BAR DIAMETERS

#4A5	1'-2"	2'-3" LONG REQ'D: 4
#5A6	1'-2"	3'-9" LONG REQ'D: 2L MINUS 1.2
#4A1	3'-3"	REQ'D: L MINUS 0.60 PLUS 1.60H
#4A2	L MINUS 3"	REQ'D: 9 PLUS 1.60H
#4A3	H PLUS 10"	REQ'D: 4
#4A4	H	REQ'D: 4

#4A7

"H"	SPACES		REQUIRED
8'-0" OR LESS	10"	H PLUS 6"	12 N + 2
8'-1" TO 10'-0"	8"	H PLUS 6"	16 N
10'-1" TO 11'-6"	4½"	H PLUS 6"	26 N + 6

NOTE:
"H" AND "L" ARE IN FEET. FINISH BARS TO THE NEAREST WHOLE NUMBER OF BARS.

TIMOTHY A. MARTIN NEW MEXICO 14072 REGISTERED PROFESSIONAL ENGINEER
1-10-13

SERIALS 623-14-1/3 AND 623-14-3/3 MUST ACCOMPANY THIS SHEET.

GENERAL NOTES

1. WORKMANSHIP AND MATERIALS SHALL CONFORM TO THE NEW MEXICO DEPARTMENT OF TRANSPORTATION'S STANDARD SPECIFICATIONS FOR HIGHWAY AND BRIDGE CONSTRUCTION (CURRENT EDITION), APPLICABLE SUPPLEMENTAL SPECIFICATIONS AND SPECIAL PROVISIONS.
2. STRUCTURAL STEEL MATERIALS, WELDING, AND FABRICATION SHALL CONFORM TO SECTION 541 – STEEL STRUCTURES OF THE STANDARD SPECIFICATIONS.
3. ALL STRUCTURAL STEEL SHALL RECEIVE A PROTECTIVE COATING IN CONFORMANCE WITH SECTION 545 OF THE STANDARD SPECIFICATIONS.
4. ALL CONCRETE TO BE CLASS "A." CHAMFER ALL EXPOSED EDGES 3/4", UNLESS OTHERWISE NOTED.
5. ALL REINFORCING BARS SHALL CONFORM TO AASHTO M31, GRADE 60. DIMENSIONS REFER TO CENTERLINE OF BARS.
6. SEE ROADWAY PLANS FOR LOCATION OF DROP INLET, NUMBER, SIZE, AND FLOW LINE ELEVATIONS OF PIPE DRAINS, AND "H" DIMENSION.
7. OUTLET PIPES SHALL NOT BE SET AT END OF DROP INLET.

DESIGN DATA:

DESIGN IS IN ACCORDANCE WITH AASHTO LRFD SPECIFICATIONS 2010 FIFTH EDITION AND CURRENT INTERIMS.

DESIGN STRESSES:	STRUCTURAL STEEL: ASTM A-36 FY = 36 KSI
	REINFORCED CONCRETE: F'c = 3,000 PSI @ 28 DAYS Fy = 60 ksi, GRADE 60
LIVE LOAD:	HL-93
HORIZONTAL EARTH PRESSURE:	36 LBS./CU.FT. EQUIVILENT FLUID PRESSURE WITH 2' LIVE LOAD SURCHARGE
MAXIMUM:	H = 11'-6"

	DATE	BY	DESCRIPTION
1	1/23/12	YML	REVISED TO LRFD.

REVISIONS (OR CHANGE NOTICES)

NEW MEXICO
DEPARTMENT OF TRANSPORTATION
STANDARD DRAWING

DROP INLET
FOR
TYPE "B" CURBS
GRATES, FRAMES, NOSE PLATES
AND CENTER SUPPORT BEAMS

DESIGNED BY: YML DRAWN BY: SKL CHECKED BY: YML/TM
623-14-2/3 2 of 3

No.	Date	REVISIONS	By

Designed By: JAW DATE: 07/2014
Drawn By: LAH DATE: 07/2014
Checked By: JAW DATE: 07/2014

Bohannan Huston
www.bhinc.com 800.877.5332

CITY OF SANTA FE
SANTA FE RIVER TRAIL
CONNECTIONS AND IMPROVEMENTS, PHASE 1
CAMINO DE CHELLY / AGUA FRIA TO CAMINO DEL CAMPO

STANDARD DETAILS

CN: S10D280

Sheet 12-12

P:\20140268\TRANS\Design\Plan Production\Plans\20140268-Serials.dwg
Thu, 13-Nov-2014 – 1:03:pm, Plotted by: LAHINDE

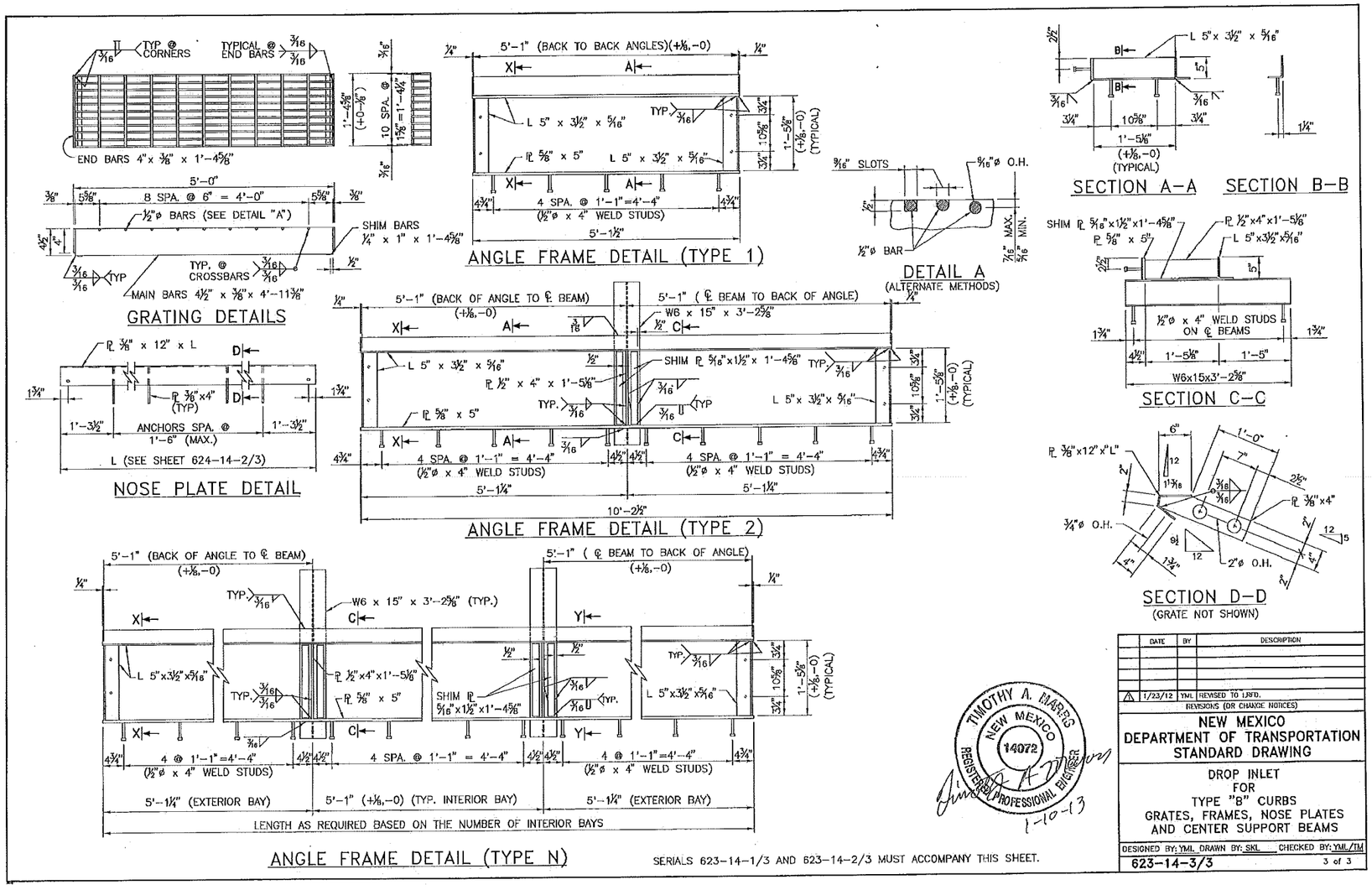

SERIALS 623–14–1/3 AND 623–14–2/3 MUST ACCOMPANY THIS SHEET.

	DATE	BY	DESCRIPTION
1	1/23/12	YML	REVISED TO LRFD.

REVISIONS (OR CHANGE NOTICES)

NEW MEXICO
DEPARTMENT OF TRANSPORTATION
STANDARD DRAWING

DROP INLET
FOR
TYPE "B" CURBS
GRATES, FRAMES, NOSE PLATES
AND CENTER SUPPORT BEAMS

DESIGNED BY: YML DRAWN BY: SKL CHECKED BY: YML/TM

623–14–3/3 3 of 3

TIMOTHY A. MARES
NEW MEXICO
14072
REGISTERED PROFESSIONAL ENGINEER
1-10-13

No.	Date	REVISIONS	By

Designed By: JAW DATE: 07/2014
Drawn By: LAH DATE: 07/2014
Checked By: JAW DATE: 07/2014

Bohannan Huston
www.bhinc.com 800.877.5332

CITY OF SANTA FE
SANTA FE RIVER TRAIL
CONNECTIONS AND IMPROVEMENTS, PHASE 1
CAMINO DE CHELLY / AGUA FRIA TO CAMINO DEL CAMPO

STANDARD DETAILS

CN: S100280

Sheet 12-13

P:\20140268\TRANS\Design\Plan Production\Plans\20140268–Serials.dwg
Thu, 13–Nov–2014 – 1:03:pm, Plotted by: LAHINDE

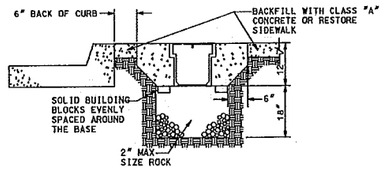

TYPICAL PULL BOX INSTALLATION

NOTE: SEE "CONCRETE COLLAR DETAILS"

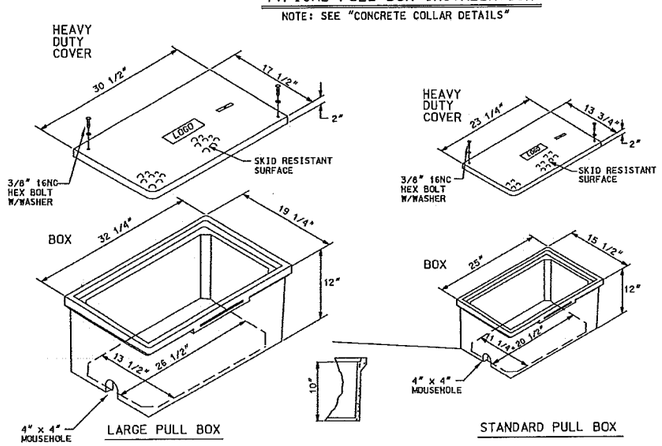

PULL BOX DETAILS

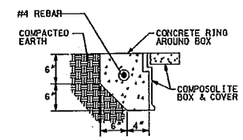

IN COMPACTED EARTH

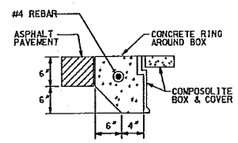

IN ASPHALT PAVEMENTS

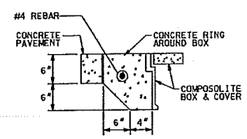

IN CONCRETE PAVEMENTS

CONCRETE COLLAR DETAIL

NOTE: THE CONCRETE COLLAR FOR THE PULL BOXES WILL BE PAID FOR UNDER THE CONTRACT ITEM FOR ELECTRICAL PULL BOX AND NO OTHER MEASUREMENT OR PAYMENT WILL BE MADE THEREFOR.

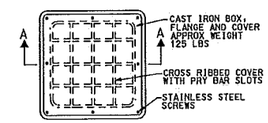

PLAN

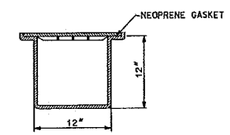

SECTION A-A

METAL PULL BOX

NOTES FOR HEAVY DUTY REINFORCED POLYMER MORTAR PULL BOX AND COVERS

1. MATERIAL TO BE AN AGGREGATE CONSISTING OF SAND AND GRAVEL BOUND TOGETHER WITH A POLYMER AND REINFORCED WITH CONTINUOUS WOVEN GLASS STRANDS. THE MATERIAL MUST HAVE THE FOLLOWING MECHANICAL PROPERTIES: COMPRESSIVE STRENGTH – 11,000 PSI, TENSILE STRENGTH – 1,700 PSI, FLEXURAL STRENGTH – 7,500 PSI.
2. ALL PULL BOX COVERS SHALL BE HEAVY DUTY REINFORCED POLYMER MORTAR, HAVING A SERVICE LOAD OF 22,568 LBS. OVER 10" SQUARE (225 PSI).
3. PULL BOX TYPE AND LOGO SHALL BE APPROVED BY THE PROJECT MANAGER.
4. THE DIMENSIONS OF THE PULL BOXES SHOWN ARE NOMINAL DIMENSIONS AND MAY VARY AS TO THE MANUFACTURER'S RECOMMENDATIONS. ALL DIMENSIONS SHALL BE VERIFIED BY THE PROJECT MANAGER.
5. ELECTRICAL PULL BOX (STANDARD) SHALL BE A HEAVY DUTY REINFORCED POLYMER MORTAR PULL BOX AND COVER MEASURING 13 3/4" X 23 1/4" X 2".

NO.	DATE	REV. BY	DESCRIPTION

REVISIONS (OR CHANGE NOTICES)

NEW MEXICO
DEPARTMENT OF TRANSPORTATION
STANDARD DRAWING

PULL BOX DETAILS

APPROVED Steve Ortiz 12-22-04
DESIGN ENGINEER DATE

DESIGNED BY___ DRAWN BY___ CHECKED BY___

7105-01-1/1

No.	Date	REVISIONS	By

Designed By: JAW DATE: 07/2014
Drawn By: LAH DATE: 07/2014
Checked By: JAW DATE: 07/2014

Bohannan Huston
www.bhinc.com 800.877.5332

CITY OF SANTA FE
SANTA FE RIVER TRAIL
CONNECTIONS AND IMPROVEMENTS, PHASE 1
CAMINO DE CHELLY / AGUA FRIA TO CAMINO DEL CAMPO

STANDARD DETAILS

CN: S100280

Sheet 12-14

P:\20140268\TRANS\Design\Plan Production\Plans\20140268-Serials.dwg
Thu, 13-Nov-2014 – 1:03:pm, Plotted by: LAHINDE

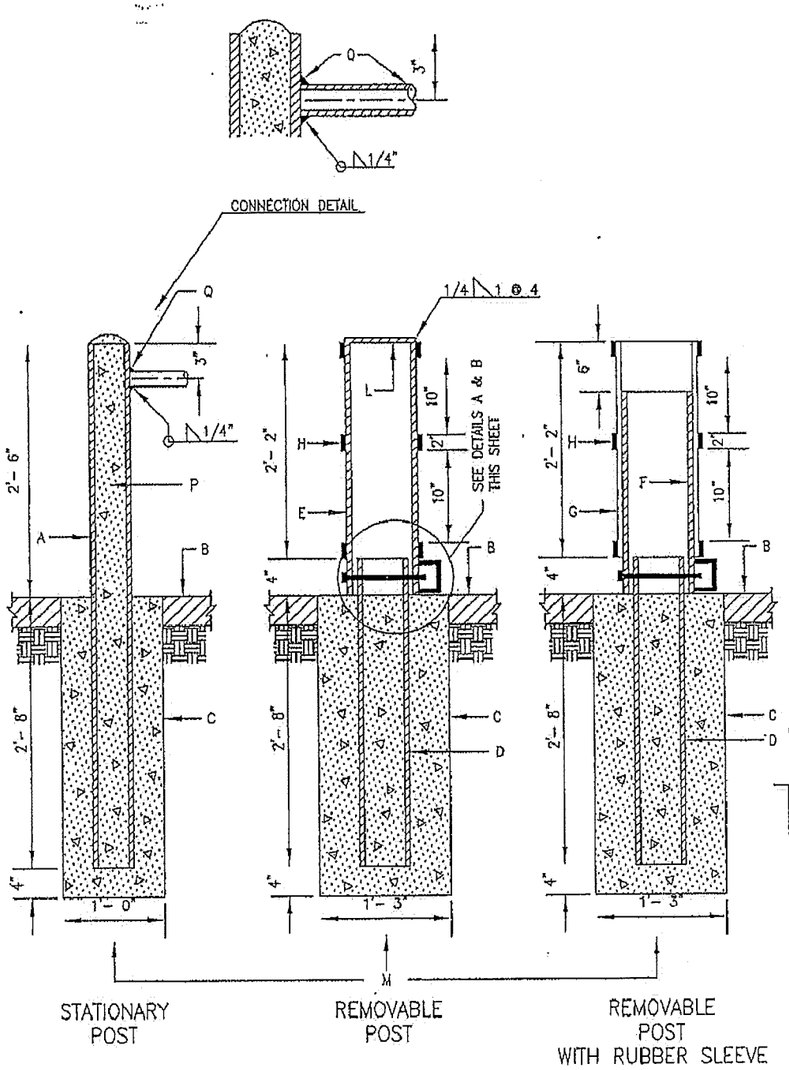

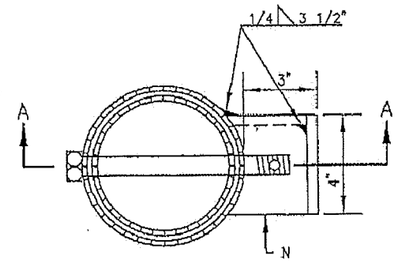

DETAIL A
PLAN

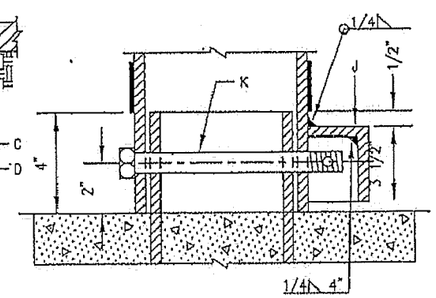

DETAIL B
SECTION A-A

GENERAL NOTES:

1. FOR SLEEVE, USE GATES NO. 3" WATER HOSE, DISCHARGE HOSE OR EQUIVALE D. 6.625" O.D. 7.29", 6 PLY WITH BLACK NEO. COVER.
2. WELDS ARE TO BE GROUND SMOOTH.
3. EXPOSED STEEL AND SLEEVE TO BE PAINTED WITH AN OIL BASE ALKYD PRIMER AND AN OIL BASE ALKYD ENAMEL TOP COAT. COLOR TO BE BRIGHT YELLOW.

CONSTRUCTION NOTES:

A. 4" NOMINAL DIA. SCHEDULE 40 GALV. STEEL PIPE, 5'- 2" TO BE FILLED W/CONC. PAINT PIPE BRIGHT YELLOW ABOVE FINISHED GRADE.

B. PAVEMENT OR FINISHED GRADE.

C. CONC. COLLAR, 3000 PSI AT 28 DAYS, W/SMOOTH OR BROOM FINISH WHERE PAVEMENT IS ADJACENT.

D. 5" NOMINAL DIA. SCHEDULE 40 GALV. STEEL PIPE, 3'- 0" TO BE FILLED W/CONC. TO LEVEL SHOWN.

E. 6" NOMINAL DIA. SCHEDULE 40 GALV. STEEL PIPE, 2'- 8" PAINT PIPE BRIGHT YELLOW (REMOVABLE).

F. 6" NOMINAL DIA. SCHEDUAL 40 GALV. STEEL PIPE, 2'- 0" (REMOVABLE).

G. SLEEVE, 2'- 2" PAINT BRIGHT YELLOW, SEE NOTE NO. 1 THIS SHEET.

H. 2" WIDE REFLECTIVE TAPE, AS APPROVED BY ENGINEER, LOCATE AROUND PIPE AS SHOWN.

J. 1/4" THICK STEEL SAFETY GUARD BOX. OPEN ON ONE SIDE & BOTTOM. WELD ALL SEAMS.

K. 3/4" X 8" GALV. HEX. BOLT W/A 3/8" DIA. HOLE FOR PADLOCK. (PADLOCK FURNISHED BY CITY).

L. 1/4" X 6 5/8" DIA. GALV. STEEL PLATE COVER, WELDED TO PIPE.

M. PLACEMENT OF POSTS SHOULD BE WELL AWAY FROM TRAFFIC ON MAJOR ROADWAYS & PERFERABLY AT THE R.O.W. LINE. TRAFFIC ENGINEERING SHOULD BE CONSULTED ON LOCATION WHEN NEAR TRAFFIC.

N. ALIGN WITH TRAFFIC FLOW IN EASEMENTS OR BIKEPATH TO AVOID TRIPPING HAZARDS WITH BOX.

P. PIPES ARE NOT TO BE FILLED W/CONC. WHEN PIPES ARE LOCATED WITHIN 15' OF STREET FLOWLINE. USE WELDED STEEL CAP INSTEAD.

Q. WHER CONNECTING BOLLARDS ARE SPECIFIED, WELD 1 1/4" NOM., SCH. 40 PIPE BETWEEN BOLLARDS.

REVISIONS	NM APWA DRAINAGE STATIONARY & REMOVABLE POST DETAILS DWG. 2250 FEB. 2006

No.	Date	REVISIONS	By

Designed By:	JAW	DATE: 07/2014
Drawn By:	LAH	DATE: 07/2014
Checked By:	JAW	DATE: 07/2014

Bohannan Huston
www.bhinc.com 800.877.5332

CITY OF SANTA FE
SANTA FE RIVER TRAIL
CONNECTIONS AND IMPROVEMENTS, PHASE 1
CAMINO DE CHELLY / AGUA FRIA TO CAMINO DEL CAMPO

STANDARD DETAILS

CN: S100280

Sheet 12-15

P:\20140268\TRANS\Design\Plan Production\Plans\20140268-Serials.dwg
Thu, 13-Nov-2014 - 1:03:pm, Plotted by: LAHINDE

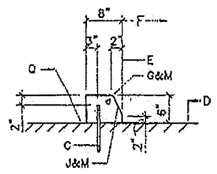

TYPE I
PINNED CURB

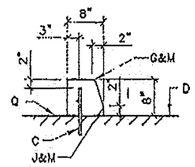

TYPE II
PINNED CURB

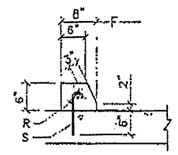

PINNED CURB TYPE III
MEDIAN PAVEMENT

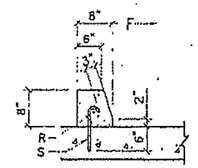

PINNED CURB TYPE IV
OUTSIDE PAVEMENT

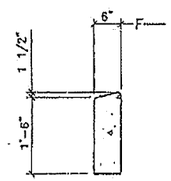

HEADER CURB

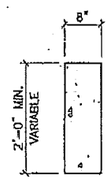

CUT-OFF WALL

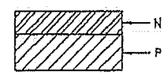

USE ONLY PER DIRECTION
OR APPROVAL OF THE
ENGINEER

TEMPORARY OR BICYCLE
PATH SECTION

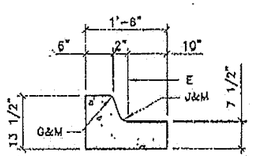

MEDIAN C & G

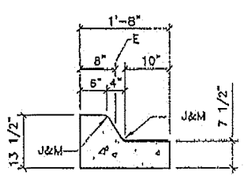

MOUNTABLE
MEDIAN CURB

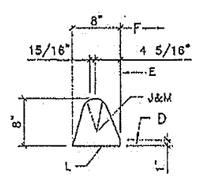

TEMPORARY ASPHALT CURB,
TYPE C RESIDENTIAL

CONSTRUCTION NOTES

A. REQ. CONC. CHANNEL LINING, OR CUT-OFF WALL, PROVIDE 1/4" EXP JOINT BETWEEN BACK OF CURB & CHANNEL LINING AND/OR WALL.

B. VARIABLE, DEPRESS AS NEEDED.

C. DRIVE NO. 4 PINS 18" DEEP IN HOLES DRILLED @ 2" O.C. IN EXISTING PAVEMENT, SEAL WITH EPOXY.

D. EXISTING ASPHALT CONCRETE (AC) OR PORTLAND CEMENT CONCRETE (PCC) PAVEMENT.

E. THEORETICAL FACE OF CURB OR FLOWLINE.

F. TRAFFIC SIDE.

G. 3/4" RADIUS.

H. 1-1/2" RADIUS.

J. 2" RADIUS.

K. 24" RADIUS.

L. TACK COAT.

M. DIMENSIONS AT ROUNDED CORNERS MEASURED TO INTERSECTION OF STRAIGHT LINES.

N. 4" AC; MAJOR LOCAL OR BETTER (SP-III)
3" AC; LOCAL RESIDENTIAL STREET (TYPE C)
2" AC; BICYCLE PATH (TYPE B, RESIDENTIAL)

P. 8" SCARIFIED AND COMPACTED SUBGRADE. 95% MINIMUM COMPACTION PER SECTION 301.

Q. AC PAVEMENT.

R. #4 CONT. BETWEEN JOINTS 3" COVER AT JOINTS.

S. #3 PINS @ 3'-0" O.C. W/STD. HOOK.

GENERAL NOTES

SEE COA DRAWING 2415A

REVISIONS	NM APWA
9/91 11/14/91 12/15/92 3/30/94	PAVING CURB AND GUTTER & TEMPORARY PAVING SECTION DWG. 2415B FEB. 2006

No.	Date	REVISIONS	By

Designed By:	JAW	DATE: 07/2014
Drawn By:	LAH	DATE: 07/2014
Checked By:	JAW	DATE: 07/2014

Bohannan Huston
www.bhinc.com 800.877.5332

CITY OF SANTA FE

SANTA FE RIVER TRAIL
CONNECTIONS AND IMPROVEMENTS, PHASE 1
CAMINO DE CHELLY / AGUA FRIA TO CAMINO DEL CAMPO

STANDARD DETAILS

CN: S100280

Sheet 12-16

P:\20140268\TRANS\Design\Plan Production\Plans\20140268-Serials.dwg
Thu, 13-Nov-2014 - 1:03:pm, Plotted by: LAHINDE

TEMPORARY TRAFFIC CONTROL GENERAL NOTES

1. CONTRACTOR MUST OBTAIN FROM OWNER AN EXCAVATION/BARRICADING PERMIT AT LEAST TWO WORKING DAYS BEFORE ENGAGING IN ANY CONSTRUCTION, MAINTENANCE OR REPAIR WORK IN ANY OF THE OWNER'S RIGHTS-OF-WAY. EMERGENCY WORK THAT WOULD PRESERVE LIFE OR PROPERTY IS EXCLUDED WITH THE UNDERSTANDING THAT A PERMIT SHALL BE OBTAINED WITHIN 24 HOURS.
2. CONTRACTOR SHALL AT THE TIME OF PERMIT REQUEST, SUBMIT FOR APPROVAL BY OWNER, A TRAFFIC CONTROL PLAN DETAILING ALL EXISTING TOPOGRAPHY SUCH AS LANE WIDTHS, DRIVEWAYS, AND BUSINESS/RESIDENTIAL ACCESSES. THE TRAFFIC CONTROL PLAN SHALL INCLUDE ALL PHASES OF WORK AND SCHEDULES INVOLVED IN THE CONSTRUCTION PROJECT. ANY SEPARATE PHASES OF A CONSTRUCTION PROJECT SHALL BE GIVEN AN INDIVIDUAL PERMIT EACH. BLANKET PERMITS WILL NOT BE ISSUED.
3. THESE TYPICAL TRAFFIC CONTROL PLANS DO NOT REFLECT THE EXISTING TOPOGRAPHY SUCH AS DRIVEWAYS, LANE WIDTHS, AND BUSINESS/RESIDENTIAL ACCESSES. EVERY LOCATION THAT REQUIRES CONSTRUCTION TRAFFIC CONTROL SHALL HAVE A DETAILED TRAFFIC CONTROL PLAN SHOWING ALL EXISTING TOPOGRAPHY.
4. CONSTRUCTION SHALL NOT BEGIN UNLESS A TRAFFIC CONTROL PLAN HAS BEEN APPROVED AND VERIFIED BY OWNER.
5. OWNER SHALL BE NOTIFIED 48 HOURS PRIOR TO ANY TRAFFIC CONTROL CHANGES NEEDED BY CONTRACTOR THAT WERE NOT PREVIOUSLY APPROVED. THESE TRAFFIC CONTROL CHANGES SHALL BE REQUESTED IN WRITING ACCOMPANIED WITH A TRAFFIC CONTROL PLAN REFLECTING SUCH CHANGES.
6. ALL CONSTRUCTION TRAFFIC CONTROL DEVICES SHALL COMPLY TO THE MANUAL ON UNIFORM TRAFFIC CONTROL DEVICES (MUTCD), LATEST EDITION. IT IS THE RESPONSIBILITY OF THE CONTRACTOR TO INSTALL, SERVICE AND MAINTAIN ALL TRAFFIC CONTROL DEVICES. TRAFFIC CONTROL DEVICES SHALL NOT BE REMOVED OR ALTERED IN ANY WAY WITHOUT THE APPROVAL OF THE OWNER, PER SECTION 6A-4 OF THE MUTCD, LATEST EDITION.
7. THE CONSTRUCTION TRAFFIC CONTROL INITIAL SETUP SHALL BE BY AN AMERICAN TRAFFIC SAFETY SERVICES ASSOCIATION (ATSSA), OR EQUIVALENT, CERTIFIED WORK SITE TRAFFIC SUPERVISOR. THE MAINTENANCE AND SERVICING SHALL ALSO BE DONE BY AN ATSSA CERTIFIED WORK SITE TRAFFIC SUPERVISOR OR EQUIVALENT.
8. CONTRACTOR IS RESPONSIBLE TO MAINTAIN AND SERVICE ALL TRAFFIC CONTROL DEVICES 24 HOURS A DAY, 7 DAYS A WEEK THROUGHOUT LENGTH OF PROJECT. CONTRACTOR IS RESPONSIBLE THAT ALL TRAFFIC CONTROL DEVICES COMPLY WITH THE MUTCD, LATEST EDITION.
9. ALL ADVANCE WARNING SIGNS SHALL BE DOUBLE INDICATED WHENEVER THERE ARE MULTI-LANE TRAFFIC IN ANY ONE GIVEN DIRECTION AND THERE IS SUFFICIENT MEDIAN SPACE.
10. ALL BARRICADES IN ALL TAPERS AND TANGENTS SHALL BE PLACED APART, A DISTANCE MEASURED IN FEET, EQUAL TO THAT OF THE POSTED SPEED LIMIT. NO EXCEPTIONS UNLESS APPROVED BY CONSTRUCTION COORDINATION PER MUTCD SECTION 6A-4.
11. ALL WORK IN ARTERIAL ROADWAYS SHALL BE ON A CONTINUOUS 24 HOUR PER DAY BASIS UNTIL COMPLETED.
12. CONTRACTOR IS RESPONSIBLE TO PROVIDE OWNER, A WEEKLY LOG OF DAILY INSPECTIONS OF BARRICADE AND MAINTENANCE SCHEDULES ON PROJECTS THAT ARE OVER ONE WEEK DURATION.
13. EQUIPMENT OR MATERIALS SHALL NOT BE STORED WITHIN 15 FEET OF A TRAVELED TRAFFIC LANE DURING NON-WORKING HOURS WITHOUT THE APPROVAL OF OWNER.
14. CONTRACTOR SHALL PROVIDE AND MAINTAIN A SAFE AND ADEQUATE MEANS OF CHANNELIZING PEDESTRIAN AND BICYCLE TRAFFIC AROUND AND THROUGH THE CONSTRUCTION AREA.
15. CONTRACTOR IS RESPONSIBLE FOR OBLITERATION OF ANY CONFLICTING STRIPING AND RESPONSIBLE FOR ALL TEMPORARY STRIPING.
16. CONTRACTOR SHALL MAINTAIN ACCESS TO ALL FACILITIES, BUSINESSES AND/OR RESIDENCES AT ALL TIMES.
17. CONTRACTOR SHALL PROVIDE ACCESS SIGNS FOR BUSINESSES LOCATED WITHIN THE CONSTRUCTION AREA UNDER THE SUPERVISION OF THE OWNER. EACH ACCESS SIGN SHALL HAVE 5 INCH, WHITE OPAQUE LETTERING ON BLUE REFLECTORIZED BACKGROUND. ACCESS SIGNS SHALL BE CONSIDERED INCIDENTAL TO THE BID AND NOT PART OF THE CONTRACT UNLESS OTHERWISE STATED. NO MORE THAN 3 BUSINESSES SHALL BE LISTED ON A ACCESS SIGN. SHOPPING CENTERS AND MALLS SHALL BE LISTED AS SUCH.
18. ALL ADVANCE WARNING SIGNS SHALL MEET THE MINIMUM REFLECTIVE INTENSITY REQUIREMENTS SET FORTH PER SECTION 6A-4 OF THE MUTCD, LATEST EDITION.
19. 48 HOURS PRIOR TO OCCUPYING OR CLOSING A RIGHT-OF-WAY, CONTRACTOR SHALL NOTIFY: POLICE, FIRE DEPARTMENT, SCHOOLS, HOSPITALS, TRANSIT AUTHORITY, BUSINESSES AND/OR RESIDENTS THAT WILL BE AFFECTED BY THE CONSTRUCTION.
20. ANY FIELD ADJUSTMENTS SHALL BE APPROVED BY OWNER.
21. EXCAVATIONS SHALL BE PLATED, TEMPORARILY PATCHED OR RESURFACED PRIOR TO OPENING OF TRAFFIC. A MINIMUM OF 11 FEET SHALL BE PROVIDED FOR TRAFFIC IN ANY GIVEN DIRECTION. CONTRACTOR IS RESPONSIBLE FOR ANY WORK INVOLVED IN SATISFYING THESE REQUIREMENTS.
22. CONTRACTOR SHALL AT ALL TIMES COMPLY WITH THE FOLLOWING STANDARDS AND REQUIREMENTS SET FORTH IN THE MANUAL ON UNIFORM TRAFFIC CONTROL DEVICES, LATEST EDITION.

    FAILURE TO COMPLY WITH ANY OF THE ABOVE MENTIONED WILL BE ADEQUATE CAUSE TO CEASE ALL WORK ON ANY CONSTRUCTION PROJECT. WORK WILL NOT RESUME UNTIL ALL REQUIREMENTS ARE ADDRESSED AND APPROVED BY OWNER.
23. ALL TRAFFIC CONTROL DEVICES SHALL BE KEPT IN NEW/CLEAN CONDITION, WASHING OF EQUIPMENT IS INCIDENTAL TO ITS PLACEMENT AND MAINTENANCE.
24. TRAFFIC CONTROL STANDARDS APPLY ONLY WHERE THE TEMPORARY TRAFFIC CONTROL PLANS ARE NOT SPECIFIC.
25. ADVANCE WARNING SIGNS SHALL BE 36"x36" MIN. WITH SUPER ENGINEERING GRADE SHEETING OR BETTER. MOUNTING HEIGHT AT TOP OF SIGN SHALL BE THE SAME AS FOR A 48" SIGN AS INDICATED IN THE M.U.T.C.D.
26. CONTRACTOR SHALL MAINTAIN A GRAFFITI FREE WORK SITE. ALL GRAFFITI SHALL BE PROMPTLY REMOVED FROM ALL EQUIPMENT, BOTH PERMANENT AND TEMPORARY.

REVISIONS	NM APWA
	TEMPORARY TRAFFIC CONTROL GENERAL NOTES
	DWG. 2801 FEB. 2006

No.	Date	REVISIONS	By

Designed By: JAW DATE: 07/2014
Drawn By: LAH DATE: 07/2014
Checked By: JAW DATE: 07/2014

Bohannan Huston
www.bhinc.com 800.877.5332

CITY OF SANTA FE
SANTA FE RIVER TRAIL
CONNECTIONS AND IMPROVEMENTS, PHASE 1
CAMINO DE CHELLY / AGUA FRIA TO CAMINO DEL CAMPO

STANDARD DETAILS

CN: S100280

Sheet 12-17

P:\20140268\TRANS\Design\Plan Production\Plans\20140268-Serials.dwg
Thu, 13-Nov-2014 - 1:03:pm, Plotted by: LAHINDE

SURFACE DETAILS

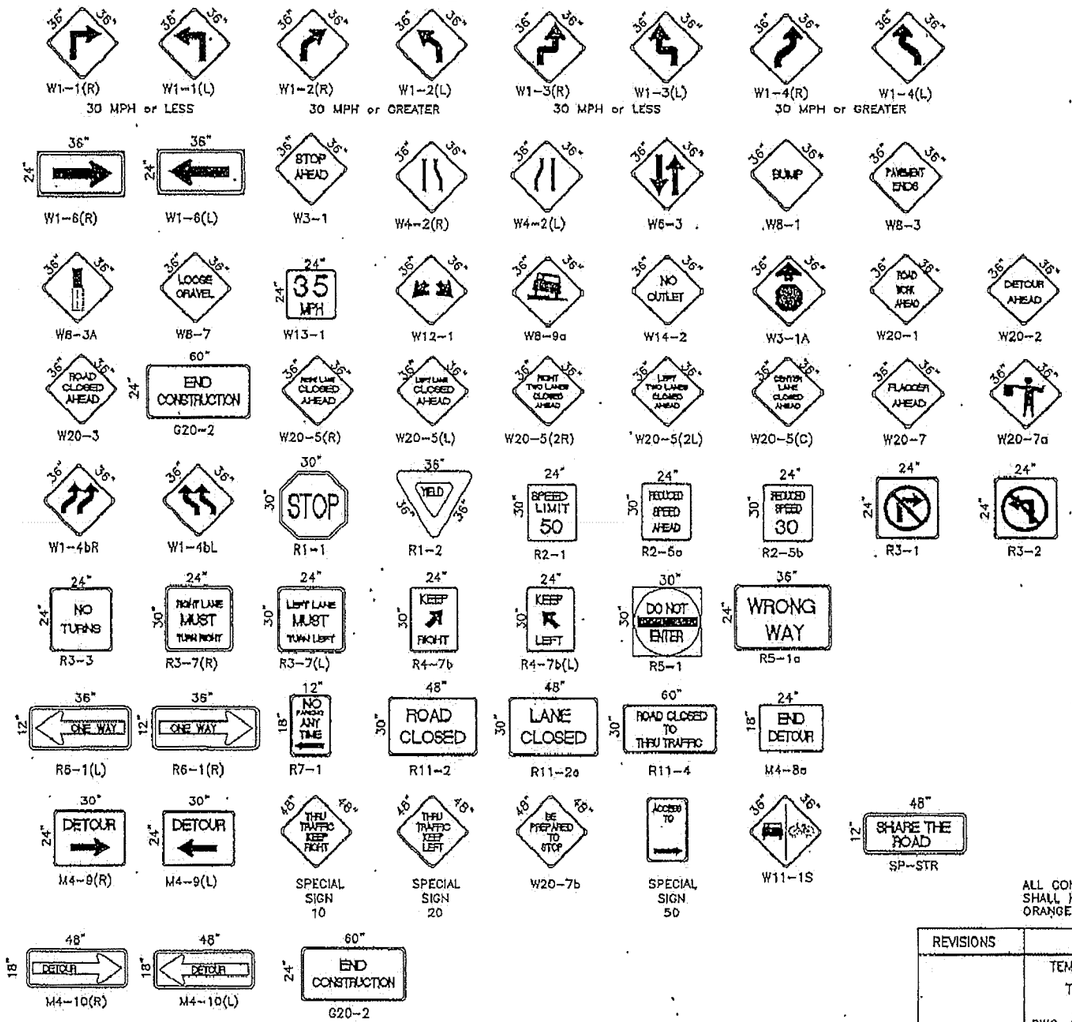

ALL CONSTRUCTION WARNING SIGNS SHALL HAVE A BLACK LEGEND ON A ORANGE BACKGROUND.

REVISIONS	NM APWA
	TEMPORARY TRAFFIC CONTROL TRAFFIC CONTROL SIGNING DWG. 2802 FEB. 2006

No.	Date	REVISIONS	By

Designed By:	JAW	DATE: 07/2014
Drawn By:	LAH	DATE: 07/2014
Checked By:	JAW	DATE: 07/2014

Bohannan Huston
www.bhinc.com 800.877.5332

CITY OF SANTA FE
SANTA FE RIVER TRAIL
CONNECTIONS AND IMPROVEMENTS, PHASE 1
CAMINO DE CHELLY / AGUA FRIA TO CAMINO DEL CAMPO

STANDARD DETAILS

CN: S100280

Sheet 12-18

P:\20140268\TRANS\Design\Plan Production\Plans\20140268-Serials.dwg
Thu, 13-Nov-2014 - 1:03:pm, Plotted by: LAHINDE

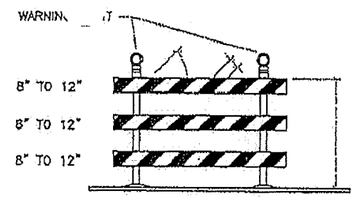

TYPE III BARRICADE

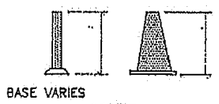

BASE VARIES

CONES

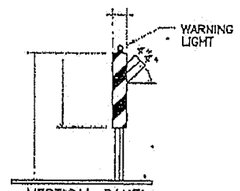

VERTICAL PANEL

NOTE: STRIPES SHALL SLOPE DOWNWARD TOWARD DIRECTION OF TRAVEL

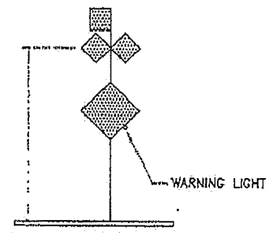

HIGH LEVEL WARNING DEVICE

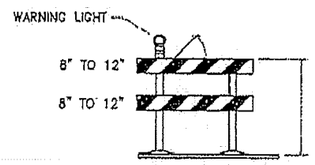

TYPE II BARRICADE COLLAPSIBLE

NOTE: STRIPES SHALL SLOPE DOWNWARD TOWARD DIRECTION OF TRAVEL

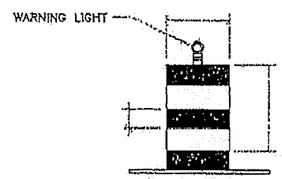

BARREL

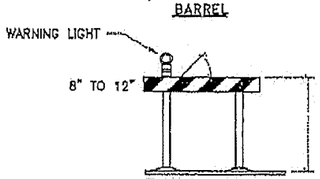

TYPE I BARRICADE COLLAPSIBLE

NOTE: STRIPES SHALL SLOPE DOWNWARD TOWARD DIRECTION OF TRAVEL

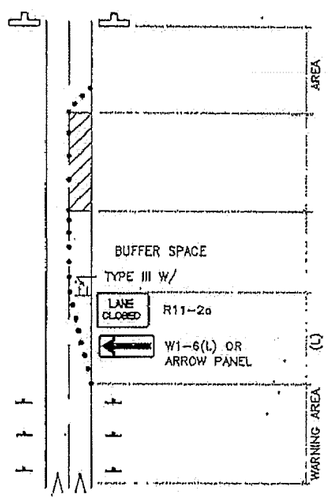

TRAFFIC CONTROL ELEMENTS

LEGEND

- WORK AREA
- BARRICADE – TYPE I, TYPE II, VERTICAL PANEL, OR BARREL
- BARRICADE – TYPE III
- VERTICAL PANEL
- WARNING SIGN
- D — DISTANCE BETWEEN SIGNS – A DISTANCE MEASURED IN FEET EQUAL TO A VALUE OF TEN TIMES THE SPEED LIMIT OF THE STREET
- FLAGMAN POSITION
- S — SPACING BETWEEN BARRICADES – A DISTANCE MEASURED IN FEET EQUAL TO THE STREET LIMIT OF THE STREET
- L — TAPER LENGTH – SEE CHART BELOW

THE TANGENT LENGTH IS EQUAL TO THE TAPER LENGTH FOR A GIVEN STREET.

TAPER REQUIREMENT

SPEED LIMIT (MPH)	TAPER LENGTH(L) (FEET)			MINIMUM NUMBER OF DEVICES FOR TAPER	MAXIMUM DEVICE SPACING IN FEET	
	10' LANE	11' LANE	12' LANE		ALONG TAPER	AFTER TAPER
20	70	75	80	5	20	20
25	105	115	125	6	25	25
30	150	165	180	7	30	30
35	205	225	245	8	35	35
40	270	295	320	9	40	40
45	450	495	540	13	45	45
50	500	550	600	13	50	50
55	550	605	660	13	55	55

TAPER CRITERIA

TYPE OF TAPER	TAPER LENGTH
UPSTREAM TAPER:	
MERGING TAPER	L MINIMUM
SHIFTING TAPER	1/2 L MINIMUM
SHOULDER TAPER	1/2 L MINIMUM
TWO-WAY TRAFFIC TAPER	100 FEET MAXIMUM
DOWNSTREAM TAPERS	100 FEET PER LANE

TAPER LENGTH COMPUTATION

SPEED LIMIT	
40 MPH OR LESS	$L = \frac{WS^2}{60}$
40 MPH OR GREATER	$L = W \times S$

L = TAPER LENGTH
W = WIDTH OF OFFSET IN FEET
S = POSTED SPEED OR OFF-PEAK 85-PERCENTILE SPEED IN MPH

RECOMMENDED SIGN SPACING(D) FOR ADVANCE WARNING SIGN SERIES

SPEED MILES PER HOUR	MINIMUM DISTANCE IN FEET: BETWEEN SIGNS	MINIMUM DISTANCE IN FEET: FROM LAST SIGN TO TAPER
0–20	10 X SPEED LIMIT	10 X SPEED LIMIT
25–30	10 X SPEED LIMIT	10 X SPEED LIMIT
30–35	10 X SPEED LIMIT	10 X SPEED LIMIT
40–45	10 X SPEED LIMIT	10 X SPEED LIMIT
50–60	10 X SPEED LIMIT	10 X SPEED LIMIT

REVISIONS	NM APWA
	TEMPORARY TRAFFIC CONTROL CONSTRUCTION TRAFFIC CONTROL STANDARDS DWG. 2803 FEB. 2006

No.	Date	REVISIONS	By

Designed By: JAW DATE: 07/2014
Drawn By: LAH DATE: 07/2014
Checked By: JAW DATE: 07/2014

Bohannan Huston
www.bhinc.com 800.877.5332

CITY OF SANTA FE
SANTA FE RIVER TRAIL
CONNECTIONS AND IMPROVEMENTS, PHASE 1
CAMINO DE CHELLY / AGUA FRIA TO CAMINO DEL CAMPO

STANDARD DETAILS

CN: S100280

Sheet 12-19

P:\20140268\TRANS\Design\Plan Production\Plans\20140268-Serials.dwg
Thu, 13-Nov-2014 – 1:03:pm, Plotted by: LAHINDE

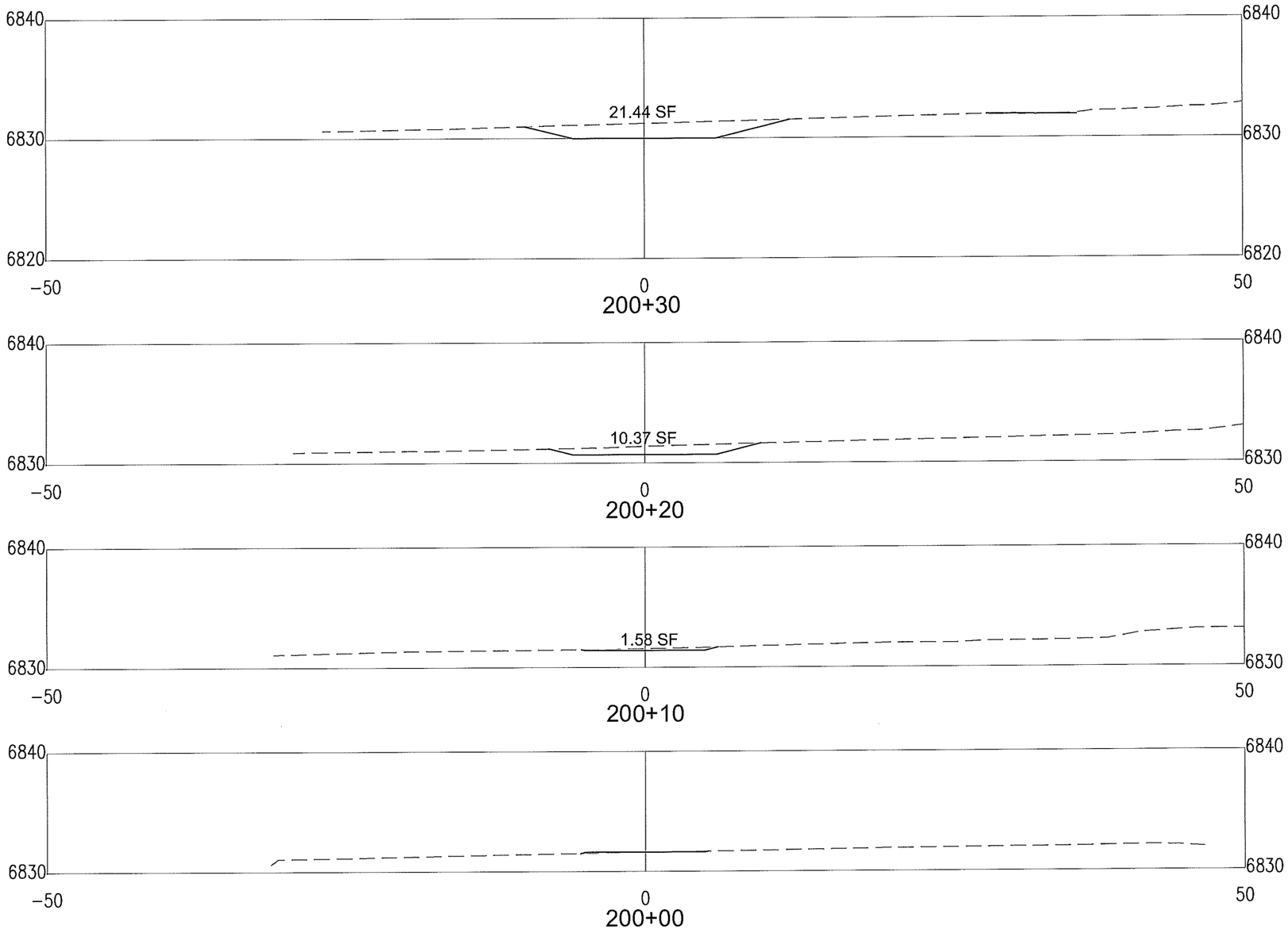

P:\20140268\TRANS\Design\Plan Production\Plans\20140268-CrossSecs.dwg
Thu, 13-Nov-2014 - 1:03:pm, Plotted by: LAHINDE

No.	Date	REVISIONS	By

JEANETTE A. WALTHER
NEW MEXICO
11243
10/21/14
REGISTERED PROFESSIONAL ENGINEER

Designed By:	JAW	DATE: 07/2014
Drawn By:	LAH	DATE: 07/2014
Checked By:	JAW	DATE: 07/2014

Bohannan Huston
www.bhinc.com 800.877.5332

CITY OF SANTA FE

SANTA FE RIVER TRAIL
CONNECTIONS AND IMPROVEMENTS, PHASE 1
CAMINO DE CHELLY / AGUA FRIA TO CAMINO DEL CAMPO

CROSS-SECTIONS
CONQUISTADORA

CN: S100280

Sheet 13-1

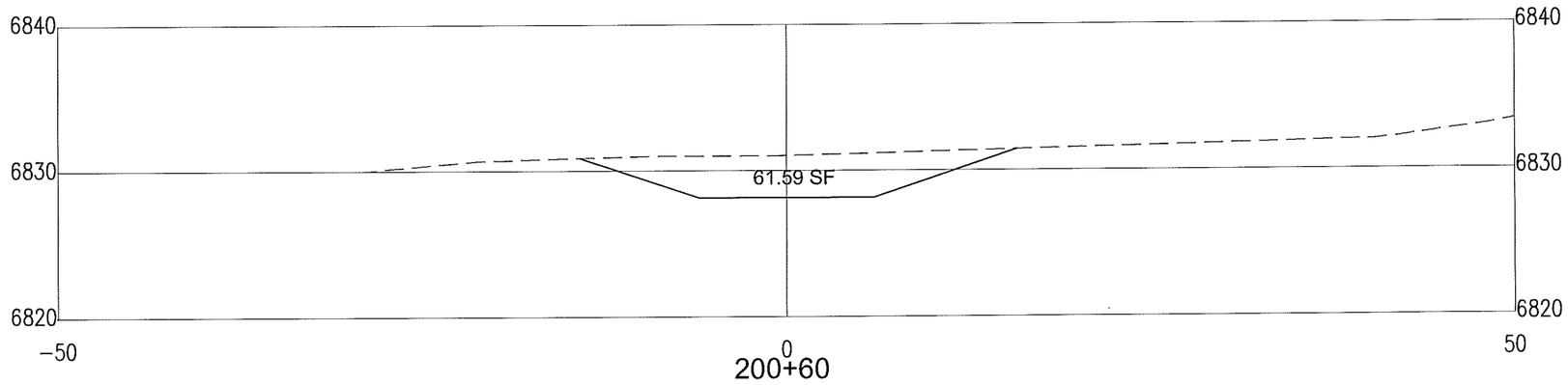

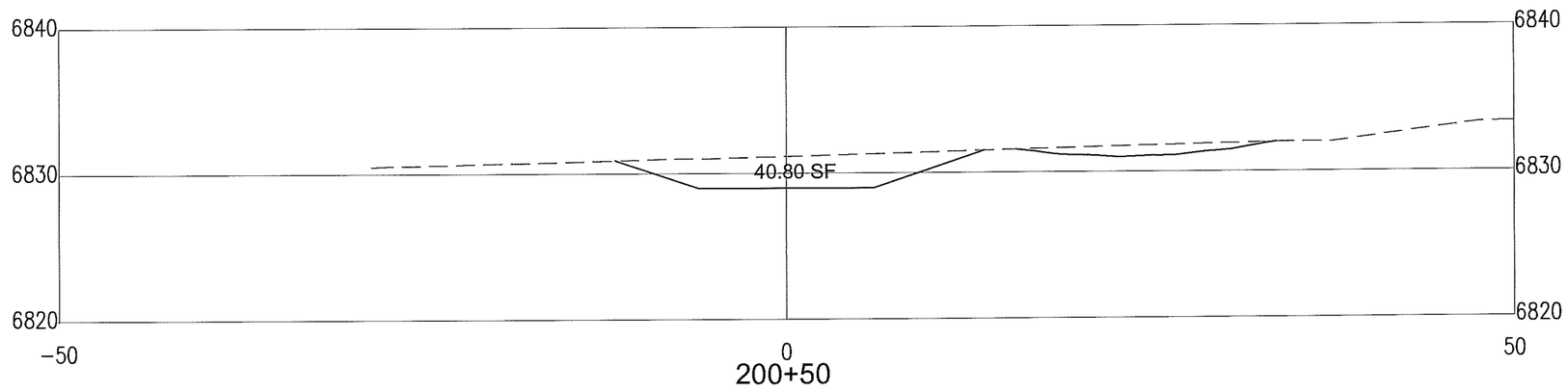

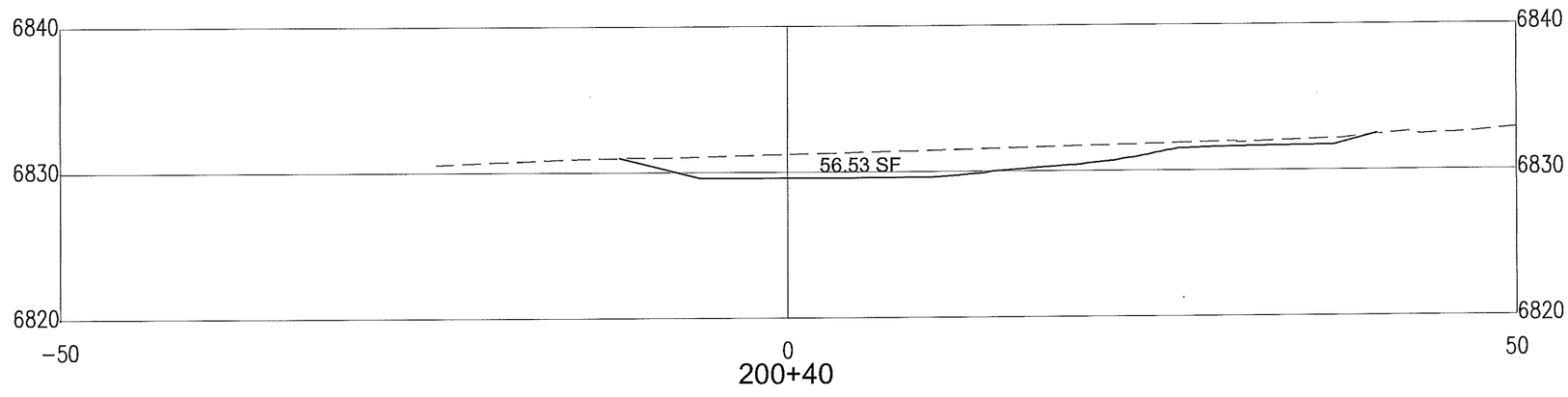

No.	Date	REVISIONS	By

Designed By:	JAW	DATE: 07/2014
Drawn By:	LAH	DATE: 07/2014
Checked By:	JAW	DATE: 07/2014

JEANETTE A. WALTHER
NEW MEXICO
11243
10/27/14
REGISTERED PROFESSIONAL ENGINEER

Bohannan Huston
www.bhinc.com 800.877.5332

CITY OF SANTA FE

SANTA FE RIVER TRAIL
CONNECTIONS AND IMPROVEMENTS, PHASE 1
CAMINO DE CHELLY / AGUA FRIA TO CAMINO DEL CAMPO

CROSS-SECTIONS
CONQUISTADORA

CN: S100280

Sheet 13-2

P:\20140268\TRANS\Design\Plan Production\Plans\20140268-CrossSecs.dwg
Thu, 13-Nov-2014 - 1:03:pm, Plotted by: LAHNDE

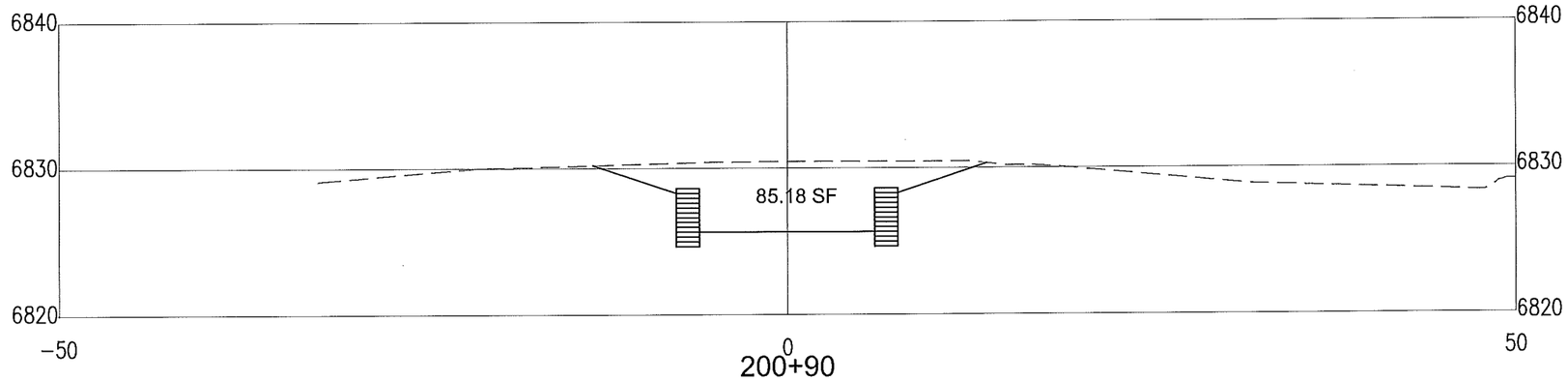

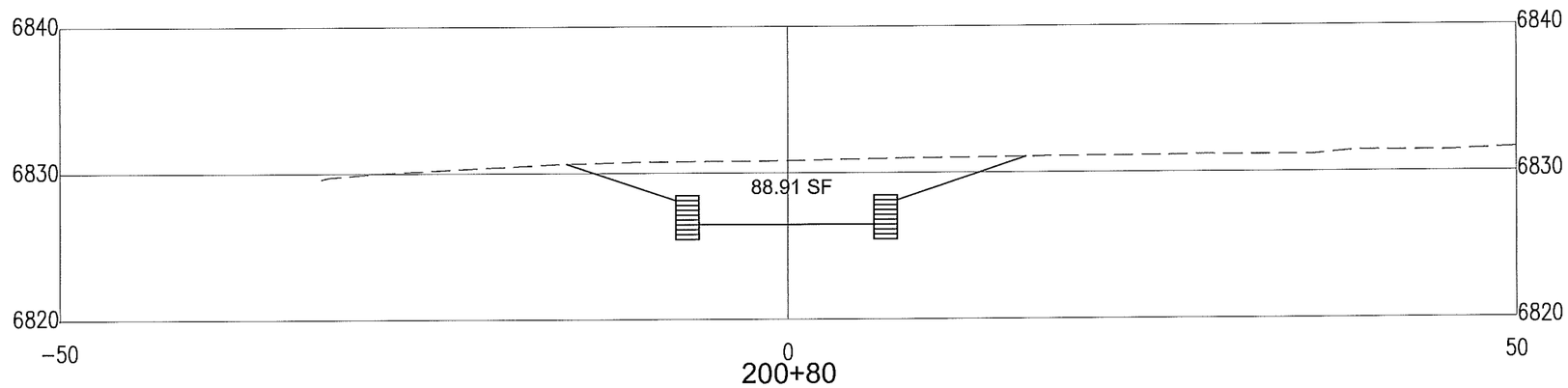

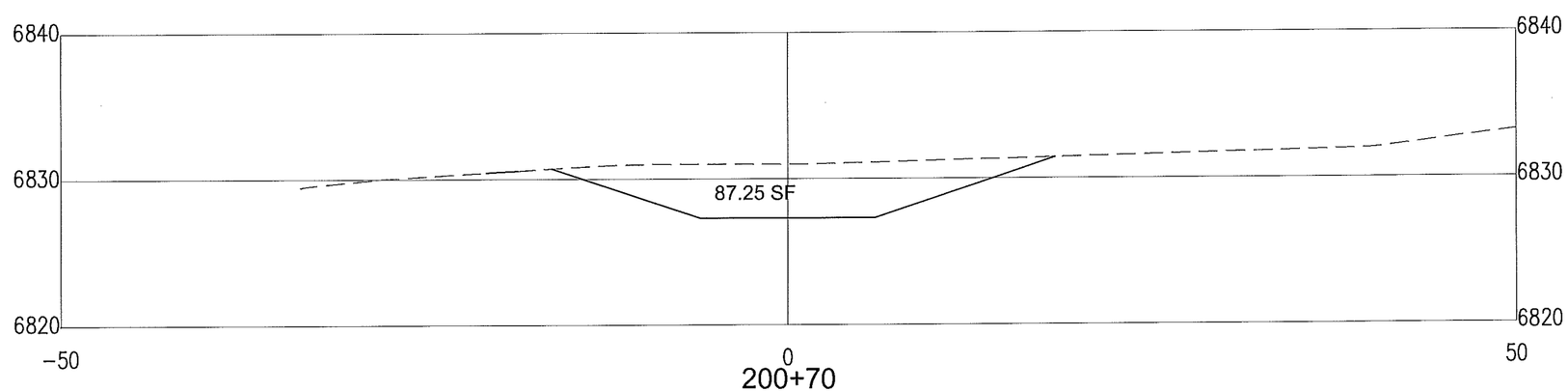

No.	Date	REVISIONS	By

Designed By:	JAW	DATE: 07/2014
Drawn By:	LAH	DATE: 07/2014
Checked By:	JAW	DATE: 07/2014

JEANETTE A. WALTHER
NEW MEXICO
11243
10/21/14
REGISTERED PROFESSIONAL ENGINEER

Bohannan Huston
www.bhinc.com 800.877.5332

CITY OF SANTA FE

SANTA FE RIVER TRAIL
CONNECTIONS AND IMPROVEMENTS, PHASE 1
CAMINO DE CHELLY / AGUA FRIA TO CAMINO DEL CAMPO

CROSS-SECTIONS
CONQUISTADORA

CN: S100280

Sheet 13-3

P:\20140268\TRANS\Design\Plan Production\Plans\20140268-CrossSecs.dwg
Thu, 13-Nov-2014 - 1:03:pm, Plotted by: LAHINDE

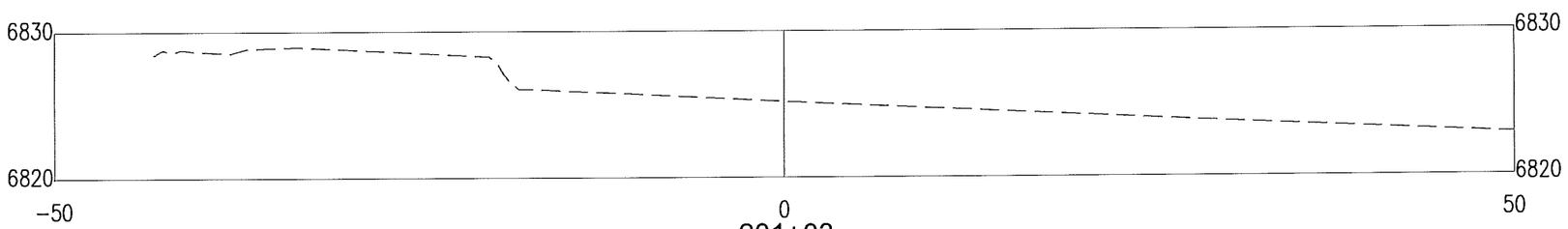

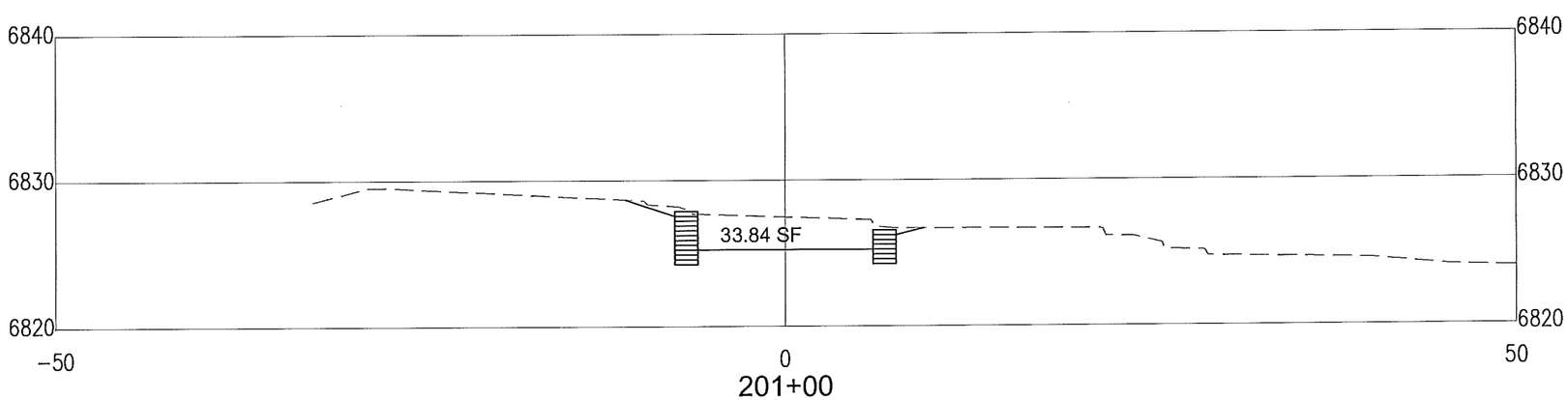

P:\20140268\TRANS\Design\Plan Production\Plans\20140268-CrossSecs.dwg
Thu, 13-Nov-2014 - 1:03:pm, Plotted by: LAHINDE

JEANETTE A. WALTHER
NEW MEXICO
11243
REGISTERED PROFESSIONAL ENGINEER
10/21/14

No.	Date	REVISIONS	By

Designed By:	JAW	DATE: 07/2014
Drawn By:	LAH	DATE: 07/2014
Checked By:	JAW	DATE: 07/2014

Bohannan Huston
www.bhinc.com 800.877.5332

CITY OF SANTA FE

SANTA FE RIVER TRAIL
CONNECTIONS AND IMPROVEMENTS, PHASE 1
CAMINO DE CHELLY / AGUA FRIA TO CAMINO DEL CAMPO

CROSS-SECTIONS
CONQUISTADORA

CN: S100280

Sheet 13-4

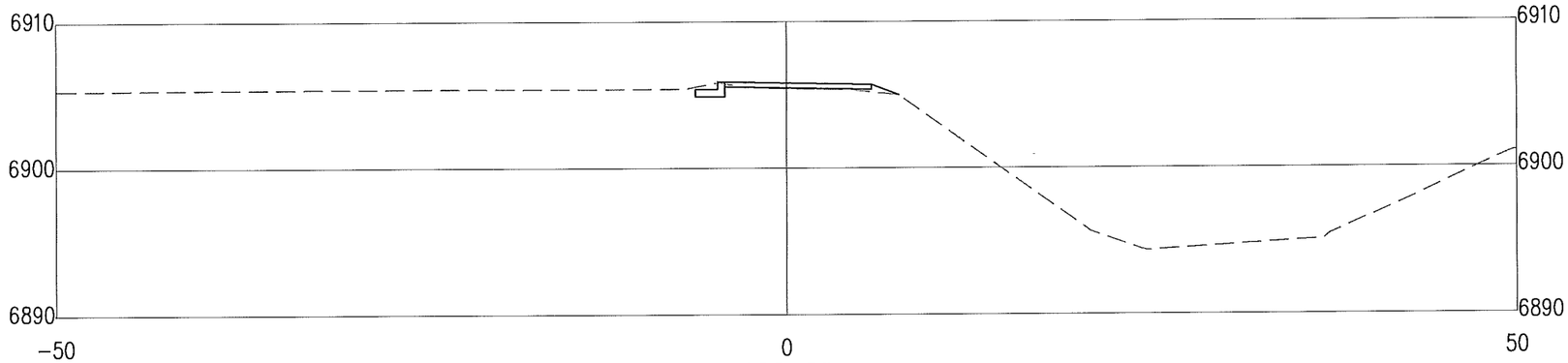

402+50

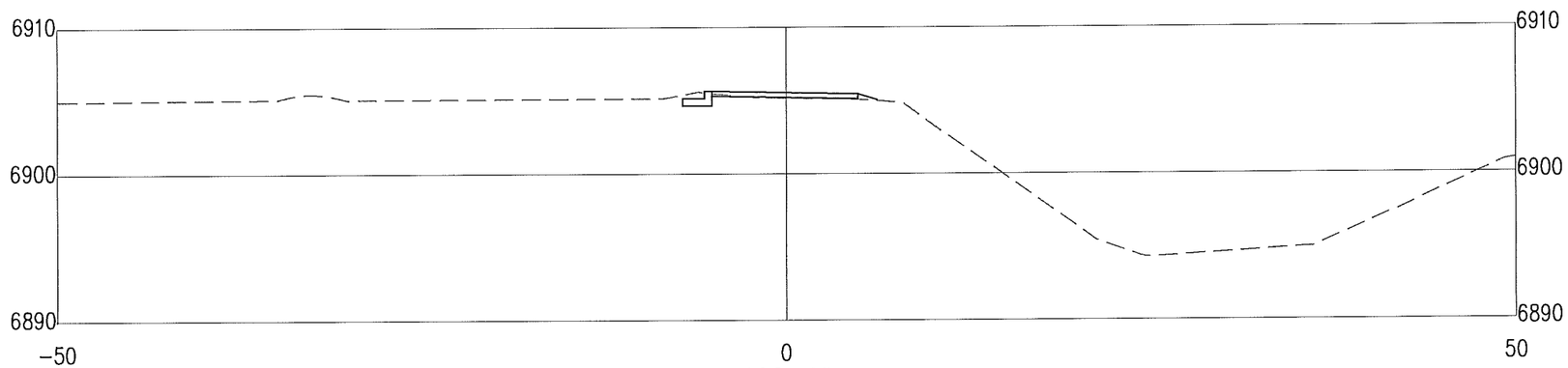

402+40

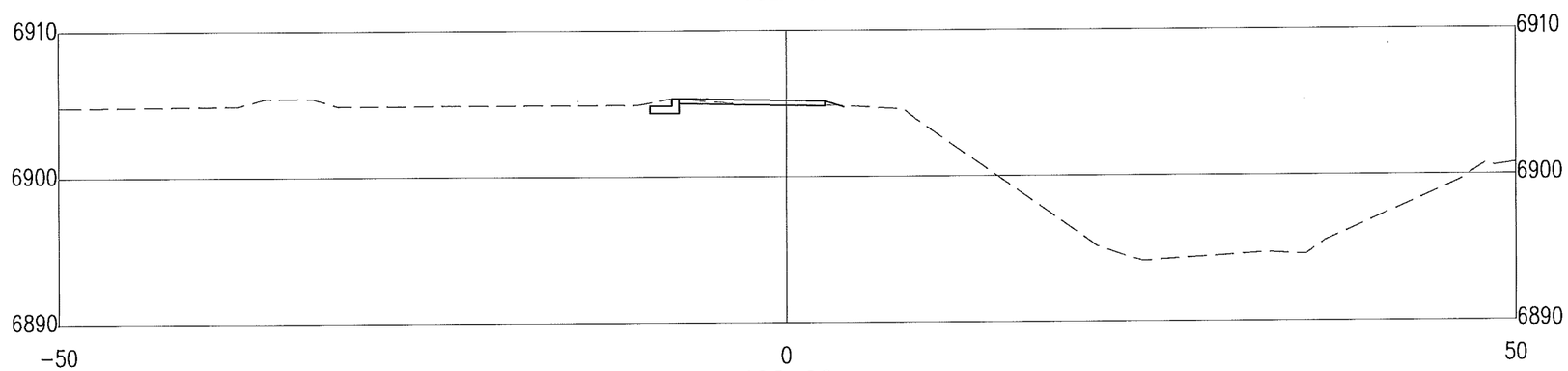

402+30

P:\20140268\TRANS\Design\Plan Production\Plans\20140268-CrossSecs.dwg
Thu, 13-Nov-2014 - 1:03:pm, Plotted by: LAHINDE

JEANETTE A. WALTHER
NEW MEXICO
11243
REGISTERED PROFESSIONAL ENGINEER
10/21/14

No.	Date	REVISIONS	By

Designed By:	JAW	DATE: 07/2014
Drawn By:	LAH	DATE: 07/2014
Checked By:	JAW	DATE: 07/2014

Bohannan Huston
www.bhinc.com 800.877.5332

CITY OF SANTA FE

SANTA FE RIVER TRAIL
CONNECTIONS AND IMPROVEMENTS, PHASE 1
CAMINO DE CHELLY / AGUA FRIA TO CAMINO DEL CAMPO

CROSS-SECTIONS
WEST ALAMEDA

CN: S100280

Sheet 13-5

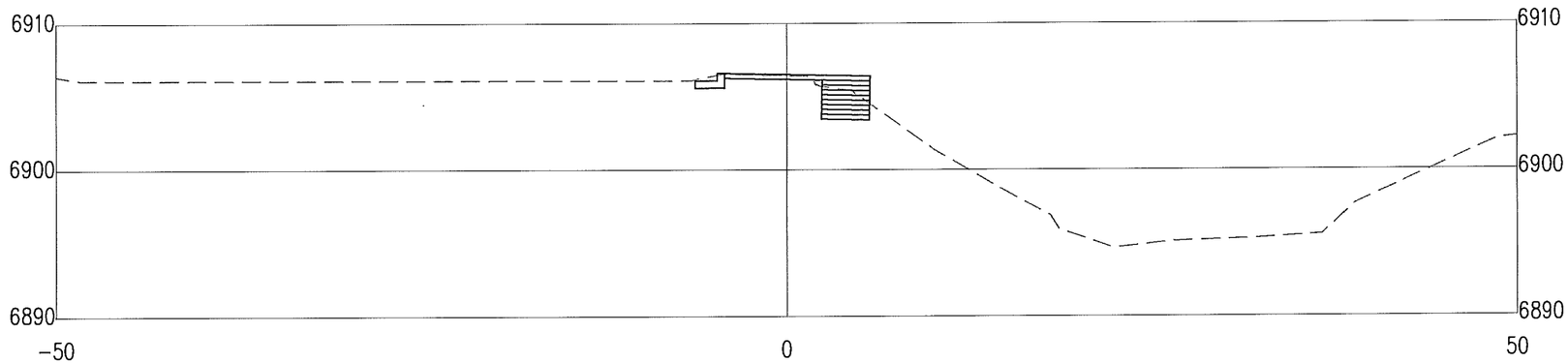

402+80

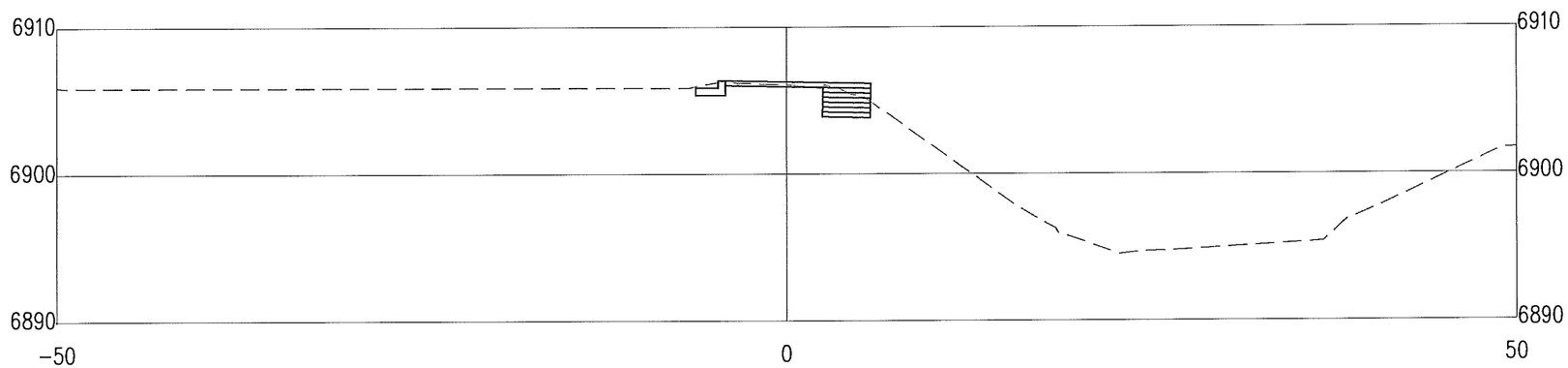

402+70

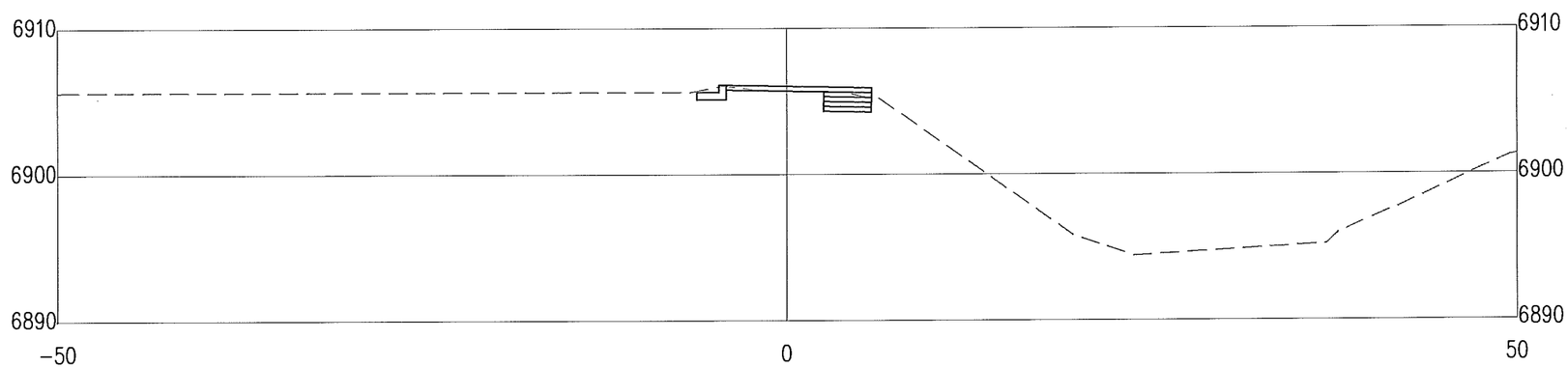

402+60

P:\20140268\TRANS\Design\Plan Production\Plans\20140268-CrossSecs.dwg
Thu, 13-Nov-2014 - 1:03:pm, Plotted by: LAHINDE

JEANETTE A. WALTHER
NEW MEXICO
1243
REGISTERED PROFESSIONAL ENGINEER
10/21/14

No.	Date	REVISIONS	By

Designed By:	JAW	DATE: 07/2014
Drawn By:	LAH	DATE: 07/2014
Checked By:	JAW	DATE: 07/2014

Bohannan Huston
www.bhinc.com 800.877.5332

CITY OF SANTA FE

SANTA FE RIVER TRAIL
CONNECTIONS AND IMPROVEMENTS, PHASE 1
CAMINO DE CHELLY / AGUA FRIA TO CAMINO DEL CAMPO

CROSS-SECTIONS
WEST ALAMEDA

CN: S100280

Sheet 13-6

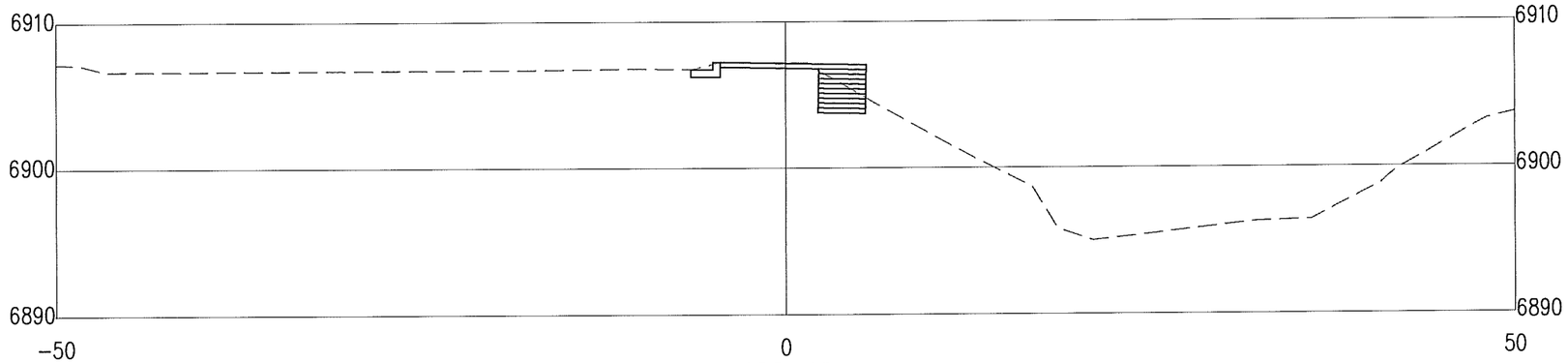

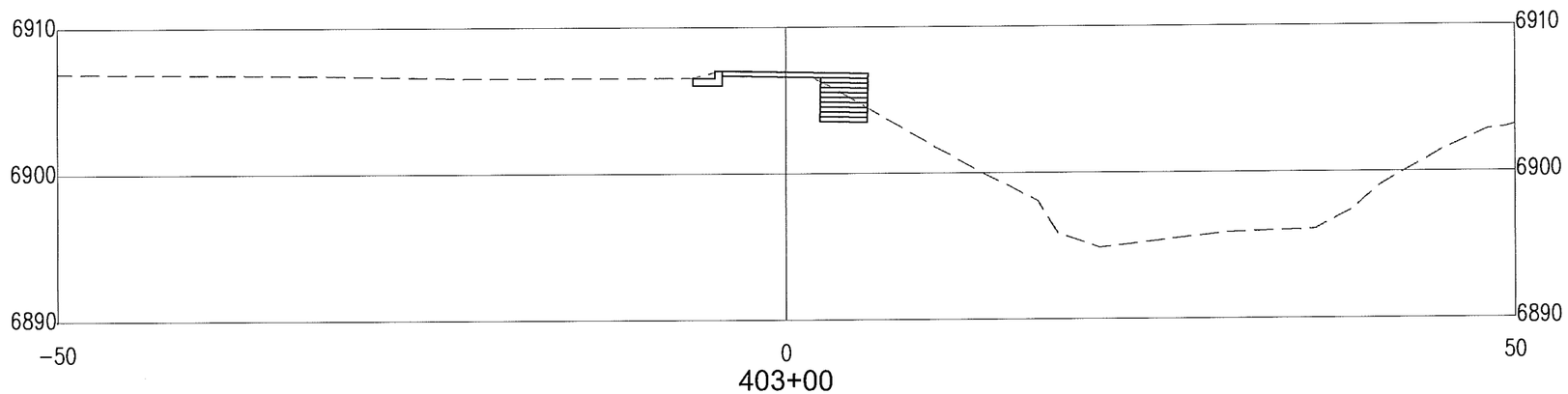

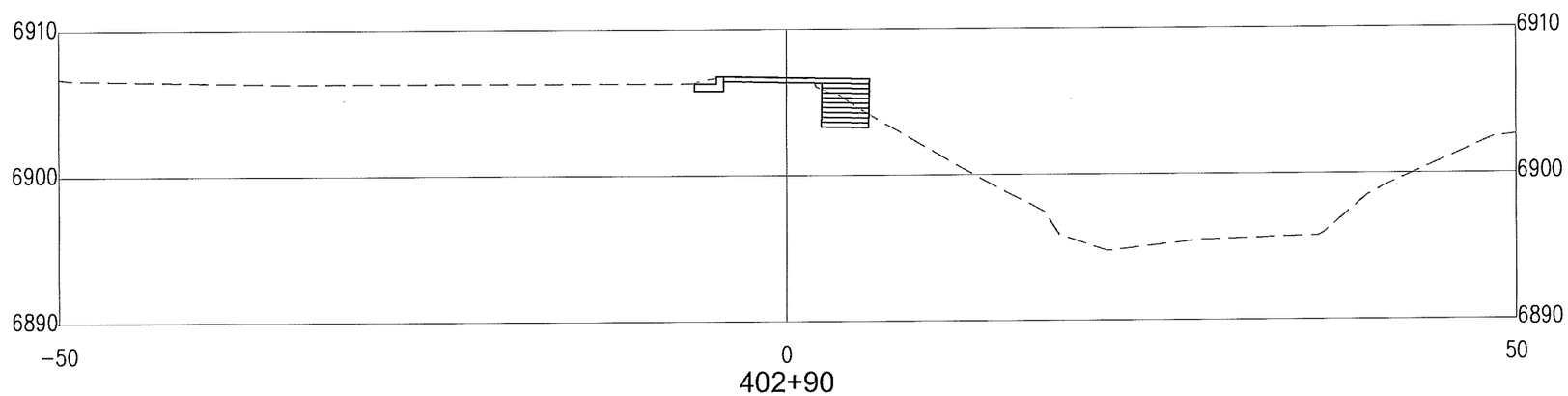

P:\20140268\TRANS\Design\Plan Production\Plans\20140268-CrossSecs.dwg
Thu, 13-Nov-2014 - 1:03:pm, Plotted by: LAHINDE

JEANETTE A. WALTHER
NEW MEXICO
11243
REGISTERED PROFESSIONAL ENGINEER
10/21/14

No.	Date	REVISIONS	By

Designed By:	JAW	DATE: 07/2014
Drawn By:	LAH	DATE: 07/2014
Checked By:	JAW	DATE: 07/2014

Bohannan Huston
www.bhinc.com 800.877.5332

CITY OF SANTA FE

SANTA FE RIVER TRAIL
CONNECTIONS AND IMPROVEMENTS, PHASE 1
CAMINO DE CHELLY / AGUA FRIA TO CAMINO DEL CAMPO

CROSS-SECTIONS
WEST ALAMEDA

CN: S100280

Sheet 13-7

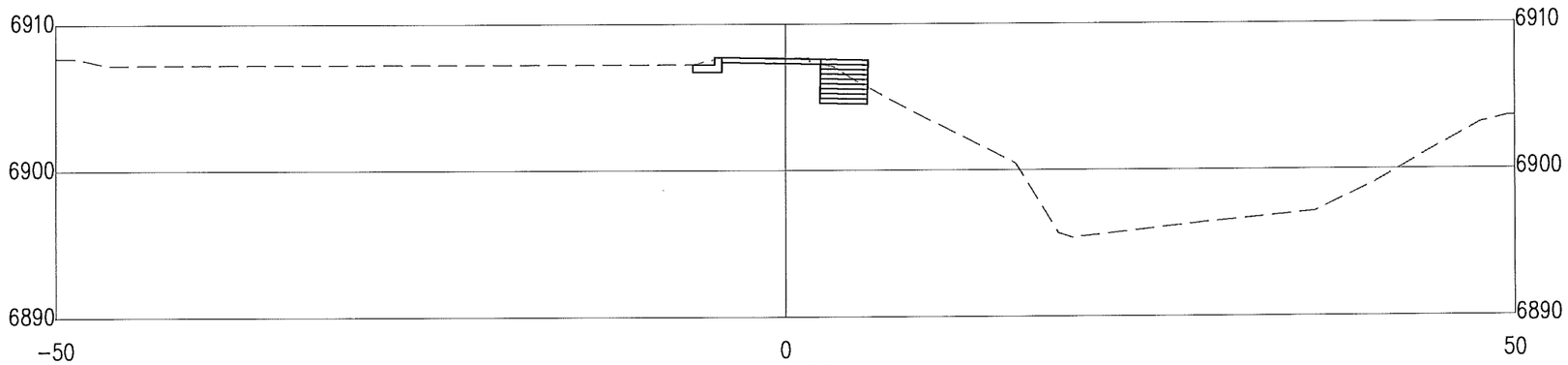

403+40

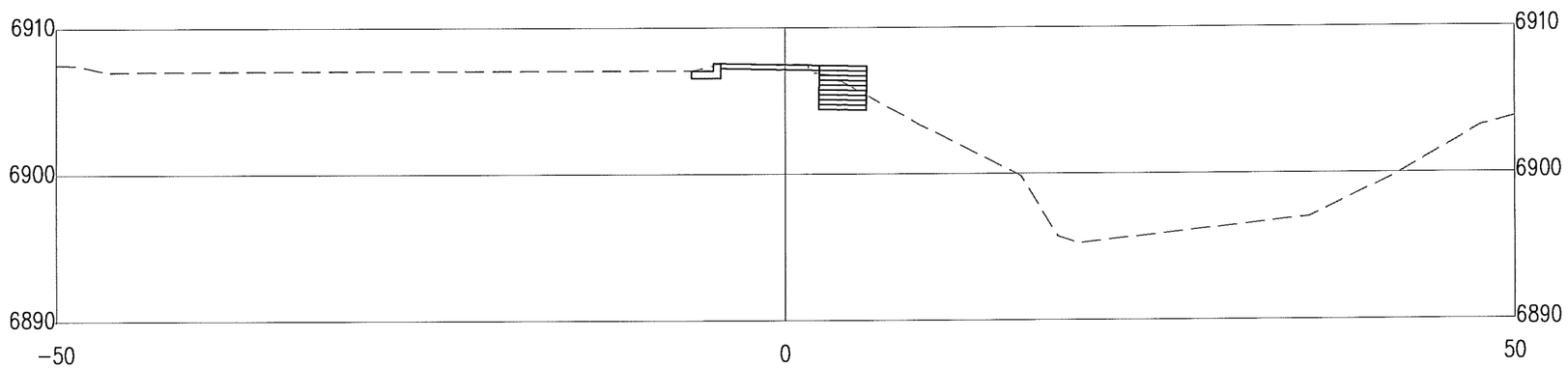

403+30

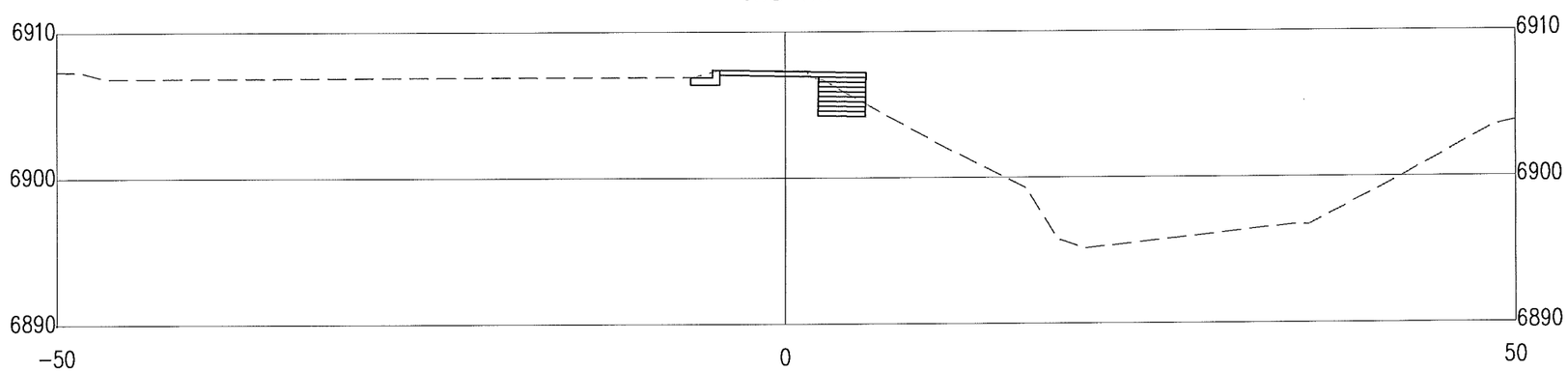

403+20

P:\20140268\TRANS\Design\Plan Production\Plans\20140268-CrossSecs.dwg
Thu, 13-Nov-2014 - 1:03:pm, Plotted by: LAHINDE

JEANETTE A. WALTHER
NEW MEXICO
11243
10/21/14
REGISTERED PROFESSIONAL ENGINEER

No.	Date	REVISIONS	By

Designed By:	JAW	DATE: 07/2014
Drawn By:	LAH	DATE: 07/2014
Checked By:	JAW	DATE: 07/2014

Bohannan Huston
www.bhinc.com 800.877.5332

CITY OF SANTA FE

SANTA FE RIVER TRAIL
CONNECTIONS AND IMPROVEMENTS, PHASE 1
CAMINO DE CHELLY / AGUA FRIA TO CAMINO DEL CAMPO

CROSS-SECTIONS
WEST ALAMEDA

CN: S100280

Sheet 13-8

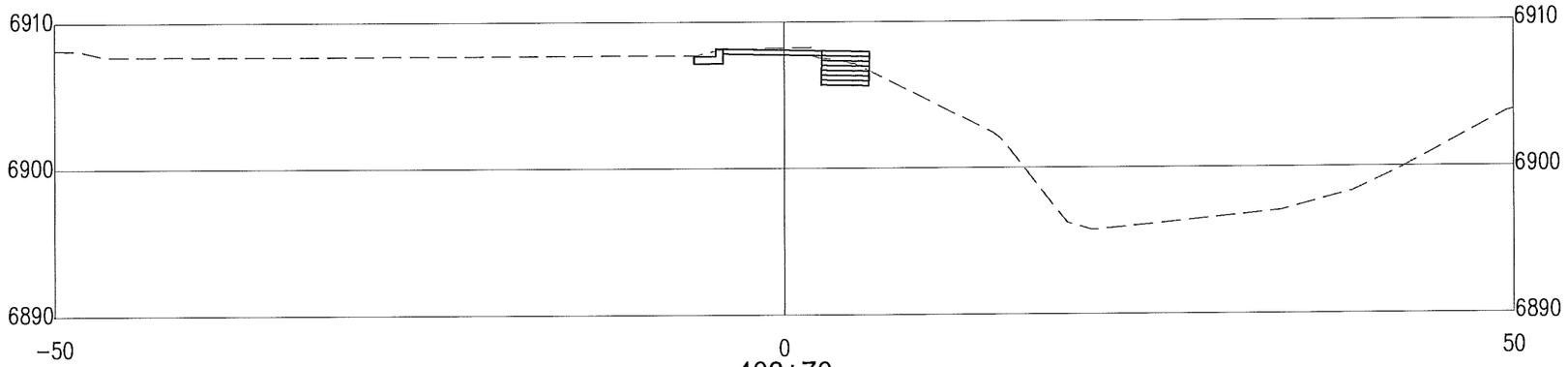

403+70

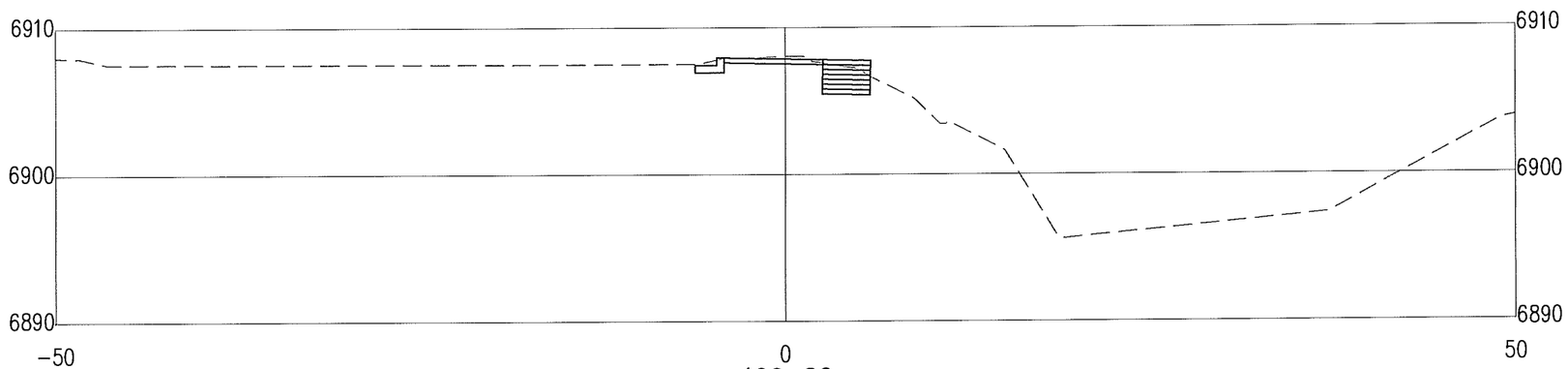

403+60

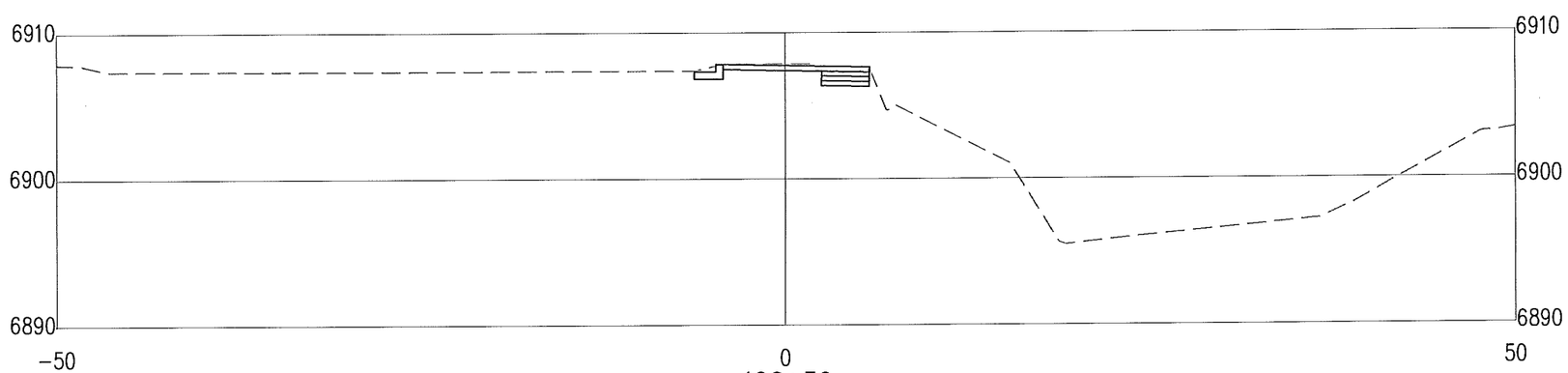

403+50

P:\20140268\TRANS\Design\Plan Production\Plans\20140268-CrossSecs.dwg
Thu, 13-Nov-2014 - 1:03:pm, Plotted by: LAHINDE

JEANETTE A. WALTHER
NEW MEXICO
11243
REGISTERED PROFESSIONAL ENGINEER
10/21/14

No.	Date	REVISIONS	By

Designed By:	JAW	DATE: 07/2014
Drawn By:	LAH	DATE: 07/2014
Checked By:	JAW	DATE: 07/2014

Bohannan Huston
www.bhinc.com 800.877.5332

CITY OF SANTA FE

SANTA FE RIVER TRAIL
CONNECTIONS AND IMPROVEMENTS, PHASE 1
CAMINO DE CHELLY / AGUA FRIA TO CAMINO DEL CAMPO

CROSS-SECTIONS
WEST ALAMEDA

CN: S100280

Sheet 13-9

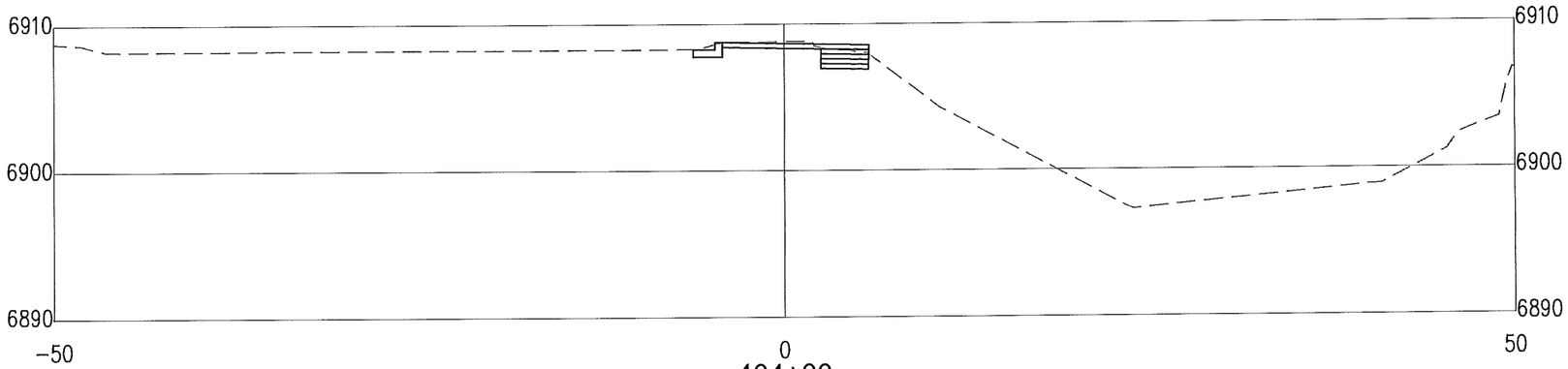

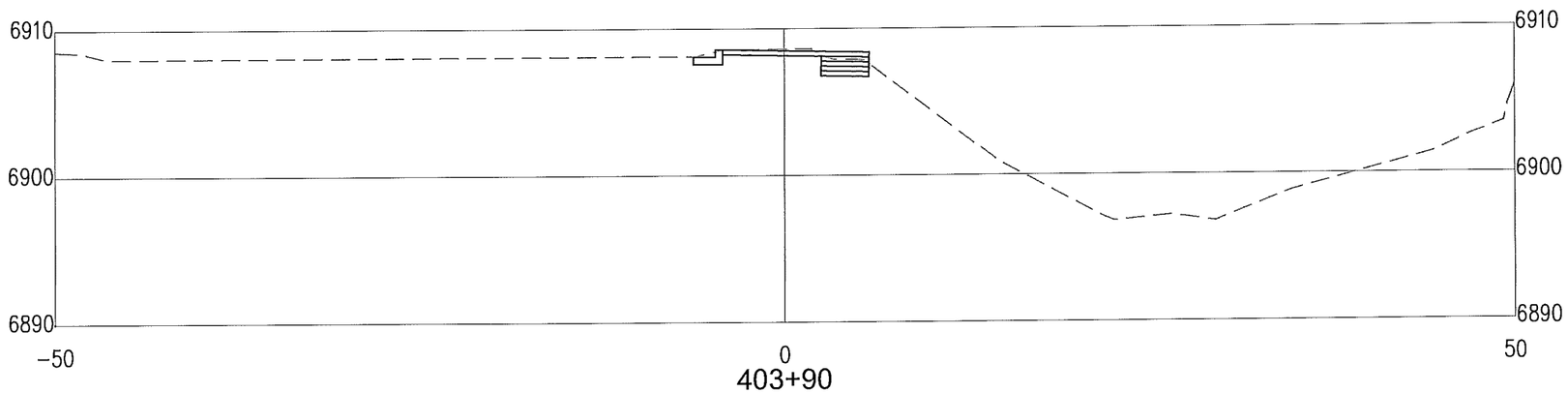

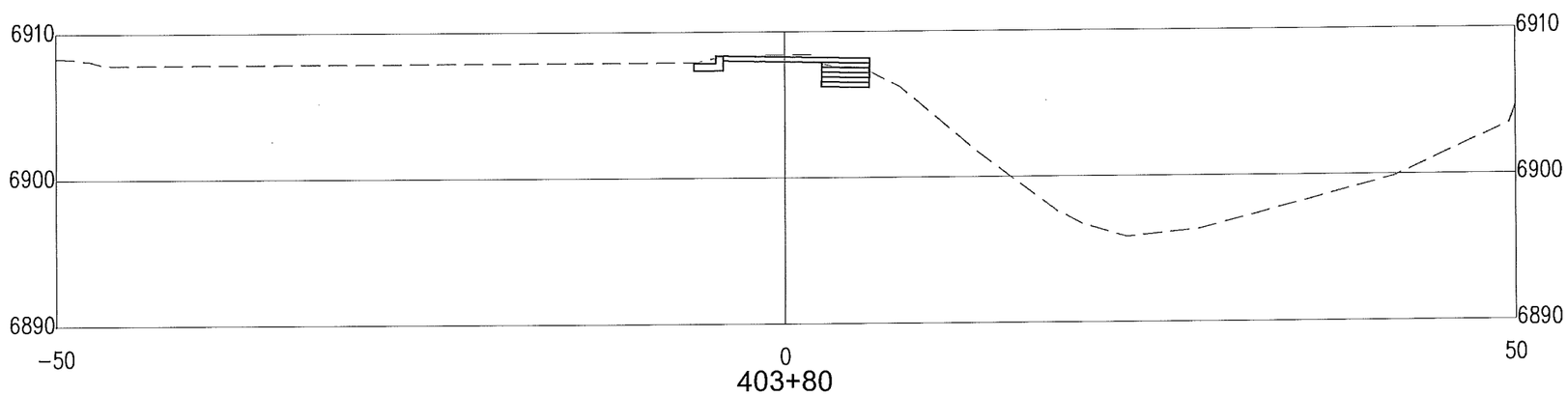

P:\20140268\TRANS\Design\Plan Production\Plans\20140268-CrossSecs.dwg
Thu, 13-Nov-2014 - 1:03:pm, Plotted by: LAHINDE

JEANETTE A. WALTHER
NEW MEXICO
11243
REGISTERED PROFESSIONAL ENGINEER
10/21/14

No.	Date	REVISIONS	By

Designed By:	JAW	DATE: 07/2014
Drawn By:	LAH	DATE: 07/2014
Checked By:	JAW	DATE: 07/2014

Bohannan Huston
www.bhinc.com 800.877.5332

CITY OF SANTA FE

SANTA FE RIVER TRAIL
CONNECTIONS AND IMPROVEMENTS, PHASE 1
CAMINO DE CHELLY / AGUA FRIA TO CAMINO DEL CAMPO

CROSS-SECTIONS
WEST ALAMEDA

CN: S100280

Sheet 13-10

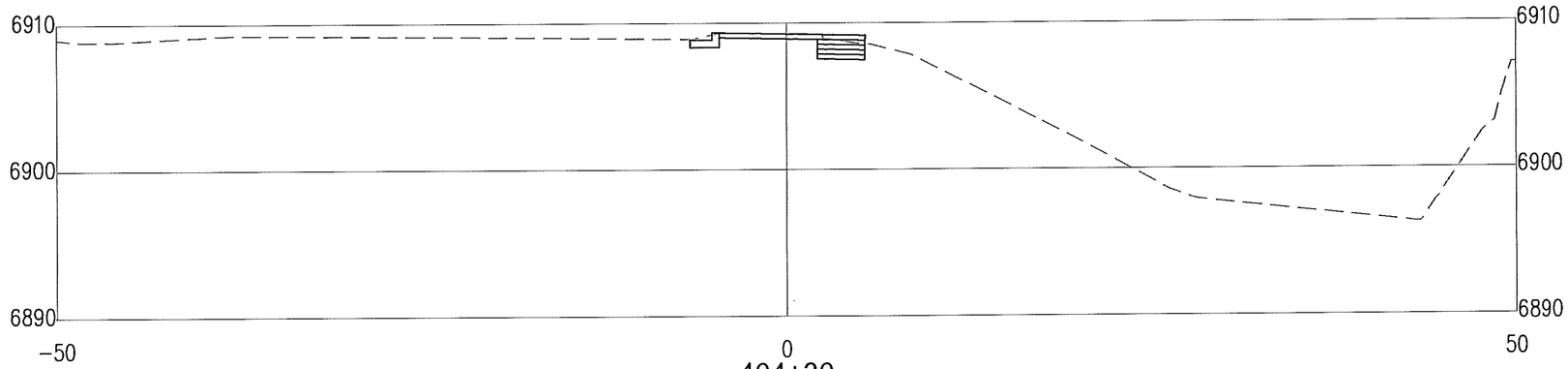

404+30

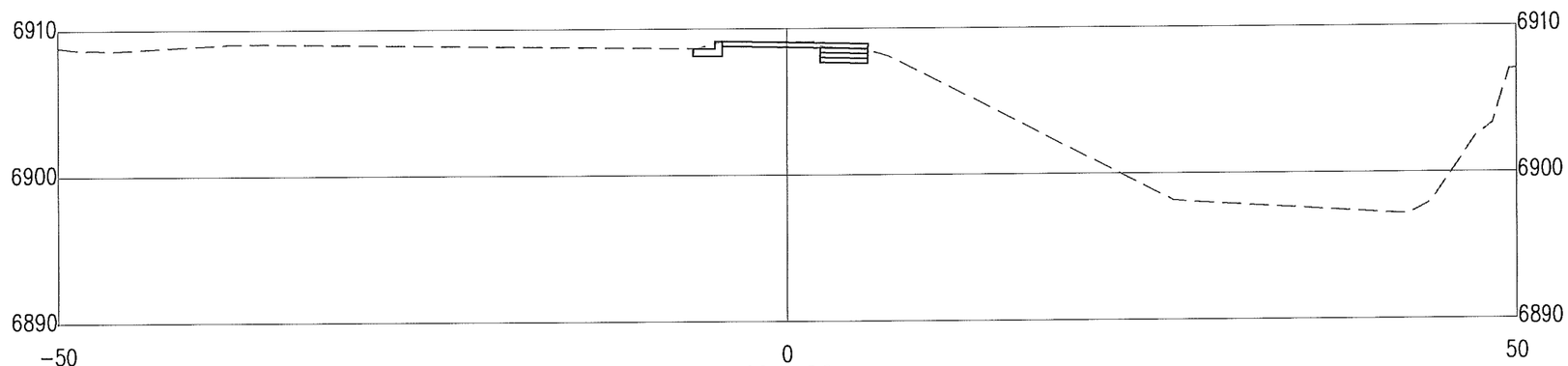

404+20

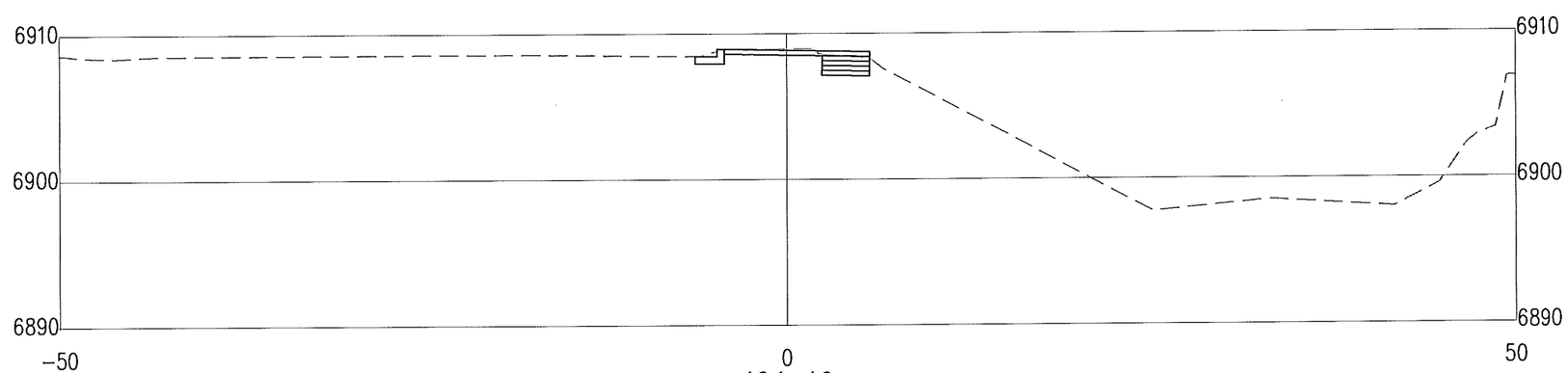

404+10

P:\20140268\TRANS\Design\Plan Production\Plans\20140268-CrossSecs.dwg
Thu, 13-Nov-2014 - 1:03:pm, Plotted by: LAHINDE

JEANETTE A. WALTHER
NEW MEXICO
11243
10/21/14
REGISTERED PROFESSIONAL ENGINEER

No.	Date	REVISIONS	By

Designed By:	JAW	DATE: 07/2014
Drawn By:	LAH	DATE: 07/2014
Checked By:	JAW	DATE: 07/2014

Bohannan Huston
www.bhinc.com 800.877.5332

CITY OF SANTA FE

SANTA FE RIVER TRAIL
CONNECTIONS AND IMPROVEMENTS, PHASE 1
CAMINO DE CHELLY / AGUA FRIA TO CAMINO DEL CAMPO

CROSS-SECTIONS
WEST ALAMEDA

CN: S100280

Sheet 13-11

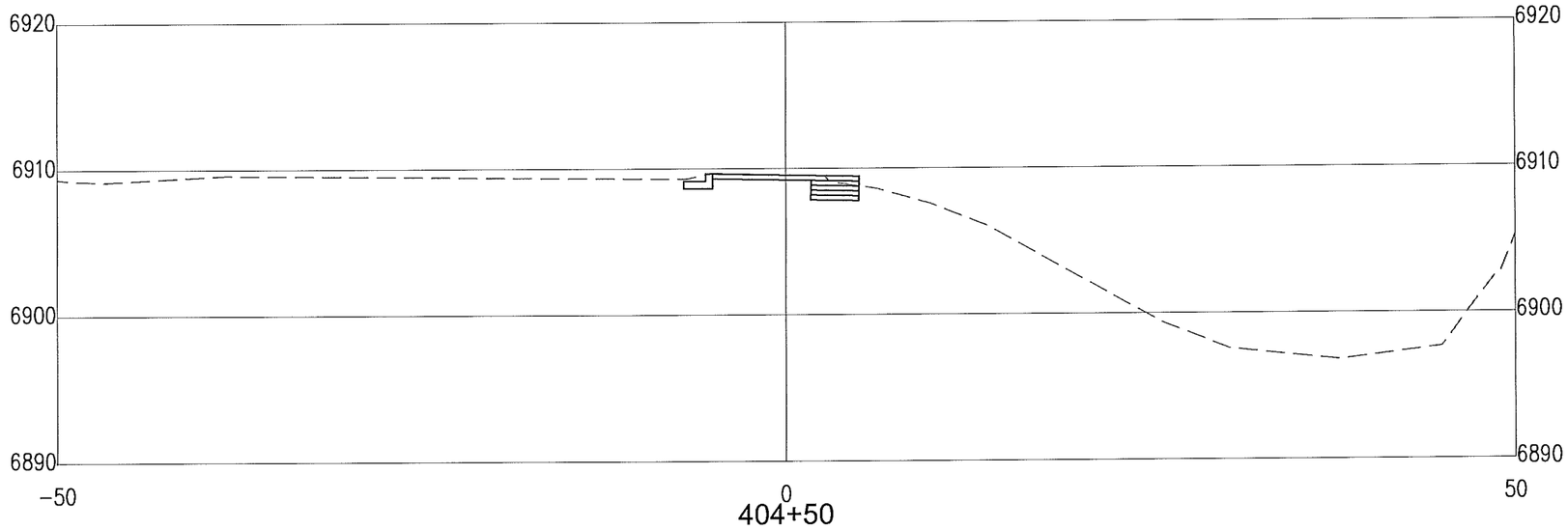

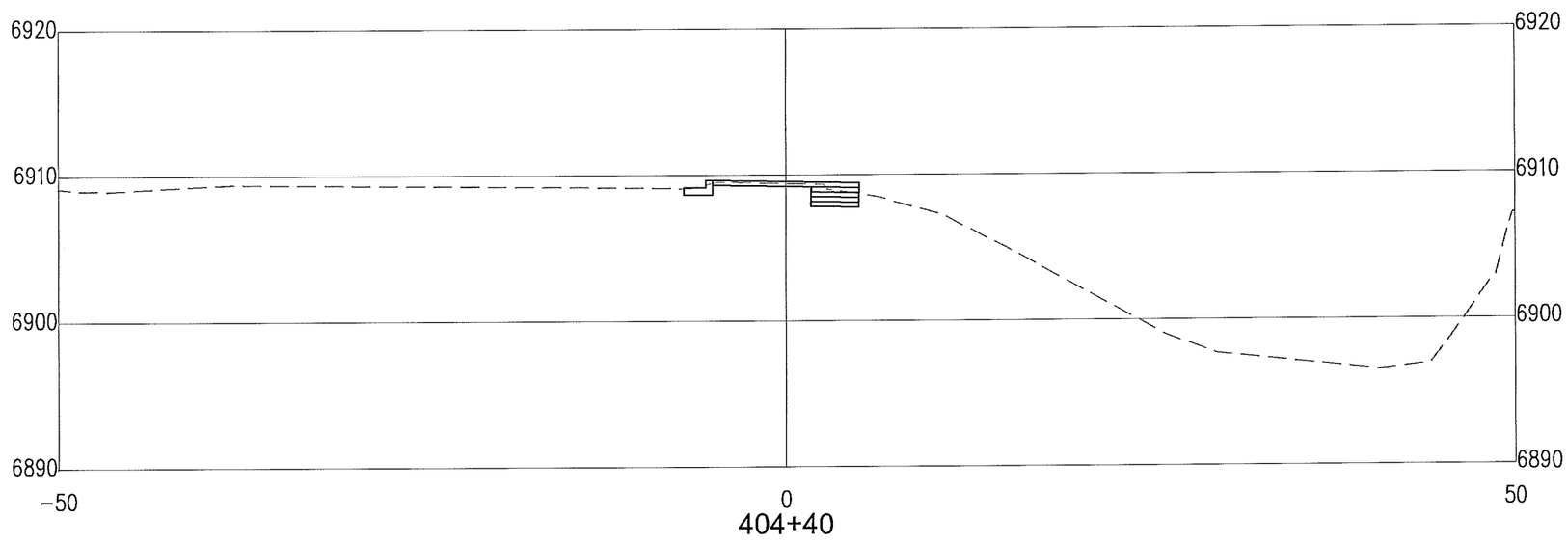

P:\20140268\TRANS\Design\Plan Production\Plans\20140268-CrossSecs.dwg
Thu, 13-Nov-2014 - 1:03:pm, Plotted by: LAHINDE

JEANETTE A. WALTHER
NEW MEXICO
11243
10/21/14
REGISTERED PROFESSIONAL ENGINEER

No.	Date	REVISIONS	By

Designed By:	JAW	DATE: 07/2014
Drawn By:	LAH	DATE: 07/2014
Checked By:	JAW	DATE: 07/2014

Bohannan Huston
www.bhinc.com 800.877.5332

CITY OF SANTA FE
SANTA FE RIVER TRAIL
CONNECTIONS AND IMPROVEMENTS, PHASE 1
CAMINO DE CHELLY / AGUA FRIA TO CAMINO DEL CAMPO

CROSS-SECTIONS
WEST ALAMEDA

CN: S100280

Sheet 13-12

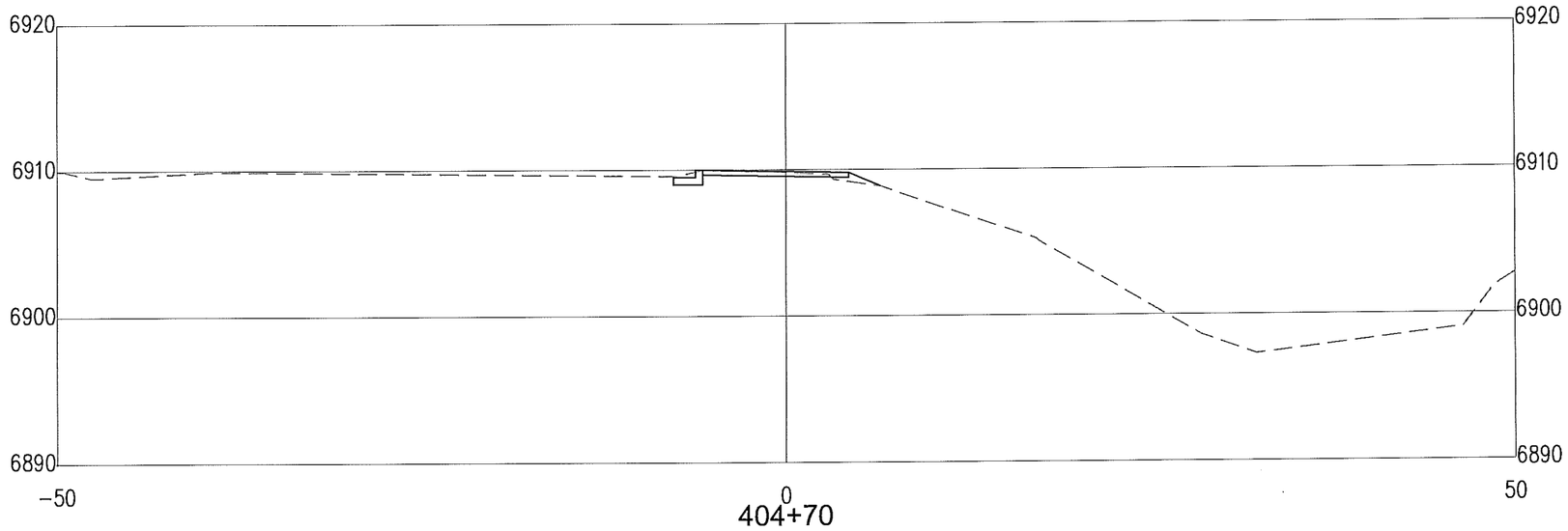

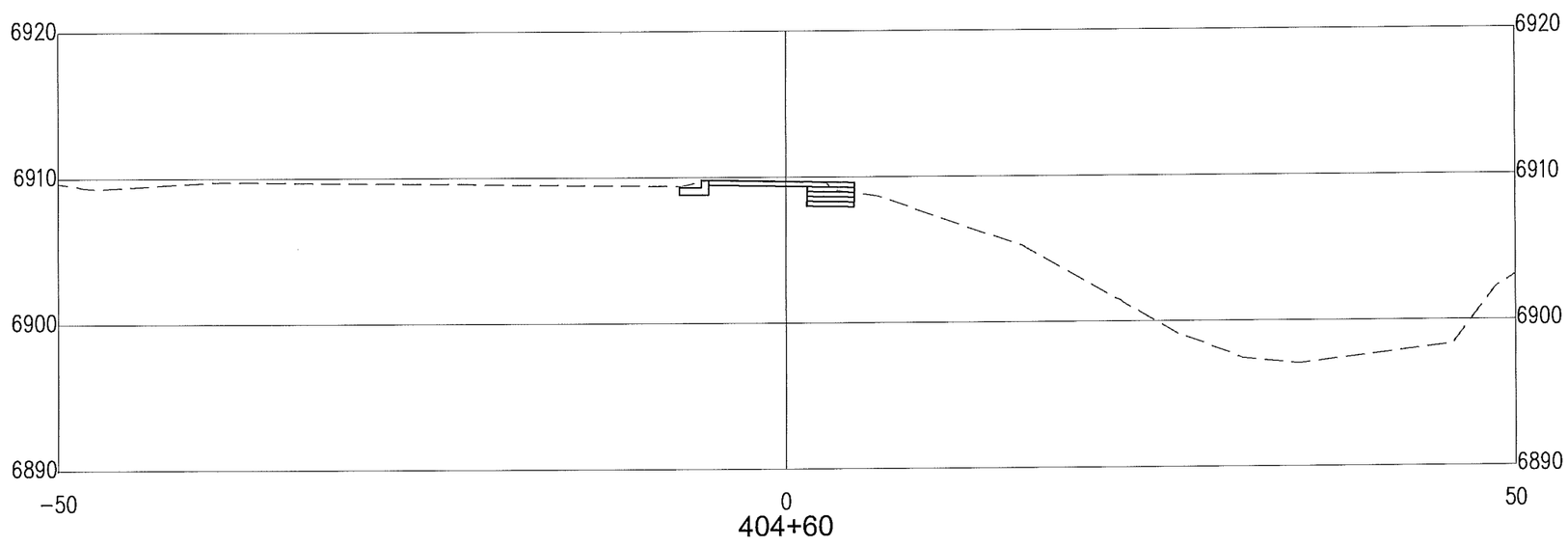

P:\20140268\TRANS\Design\Plan Production\Plans\20140268-CrossSecs.dwg
Thu, 13-Nov-2014 - 1:03:pm, Plotted by: LAHINDE

JEANETTE A. WALTHER
NEW MEXICO
11243
10/21/14
REGISTERED PROFESSIONAL ENGINEER

No.	Date	REVISIONS	By

Designed By:	JAW	DATE: 07/2014
Drawn By:	LAH	DATE: 07/2014
Checked By:	JAW	DATE: 07/2014

Bohannan Huston
www.bhinc.com 800.877.5332

CITY OF SANTA FE
SANTA FE RIVER TRAIL
CONNECTIONS AND IMPROVEMENTS, PHASE 1
CAMINO DE CHELLY / AGUA FRIA TO CAMINO DEL CAMPO

CROSS-SECTIONS
WEST ALAMEDA

CN: S100280

Sheet 13-13

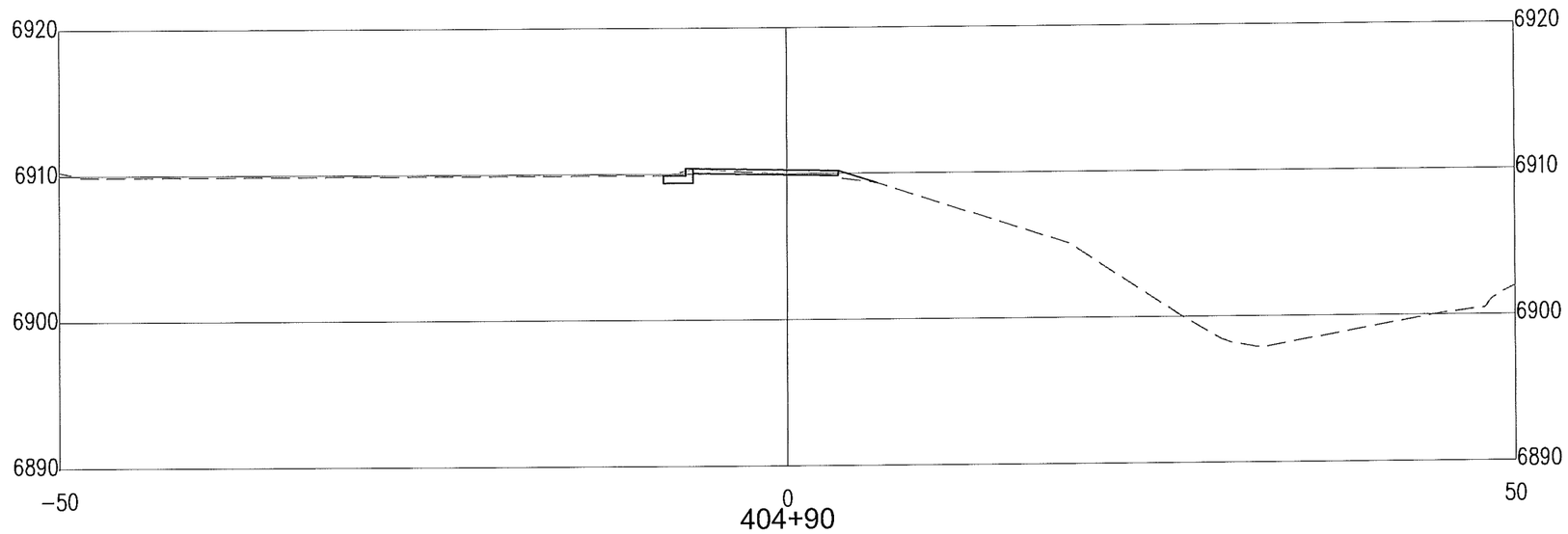

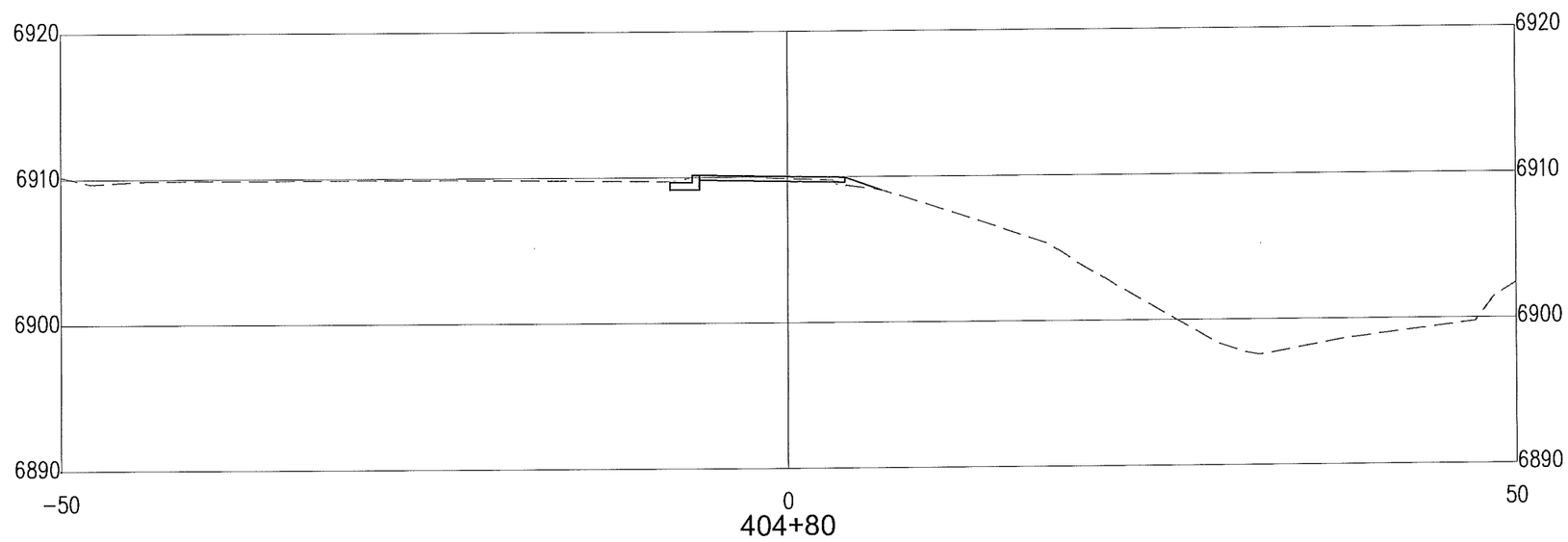

P:\20140268\TRANS\Design\Plan Production\Plans\20140268-CrossSecs.dwg
Thu, 13-Nov-2014 - 1:03:pm, Plotted by: LAHINDE

JEANETTE A. WALTHER
NEW MEXICO
11243
REGISTERED PROFESSIONAL ENGINEER
10/21/14

No.	Date	REVISIONS	By

Designed By:	JAW	DATE: 07/2014
Drawn By:	LAH	DATE: 07/2014
Checked By:	JAW	DATE: 07/2014

Bohannan Huston
www.bhinc.com 800.877.5332

CITY OF SANTA FE

SANTA FE RIVER TRAIL
CONNECTIONS AND IMPROVEMENTS, PHASE 1
CAMINO DE CHELLY / AGUA FRIA TO CAMINO DEL CAMPO

CROSS-SECTIONS
WEST ALAMEDA

CN: S100280

Sheet 13-14

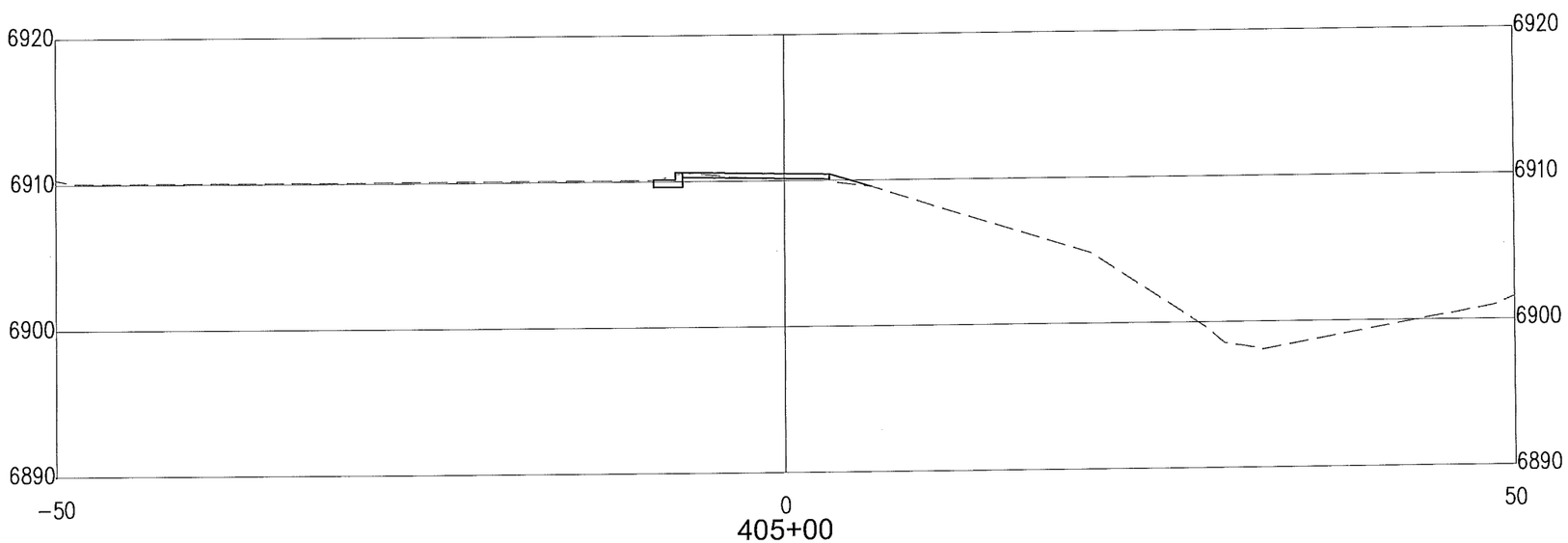

P:\20140268\TRANS\Design\Plan Production\Plans\20140268-CrossSecs.dwg
Thu, 13-Nov-2014 - 1:03:pm, Plotted by: LAHINDE

JEANETTE A. WALTHER
NEW MEXICO
11243
REGISTERED PROFESSIONAL ENGINEER
10/21/14

No.	Date	REVISIONS	By

Designed By:	JAW	DATE: 07/2014
Drawn By:	LAH	DATE: 07/2014
Checked By:	JAW	DATE: 07/2014

Bohannan Huston
www.bhinc.com 800.877.5332

CITY OF SANTA FE

SANTA FE RIVER TRAIL
CONNECTIONS AND IMPROVEMENTS, PHASE 1
CAMINO DE CHELLY / AGUA FRIA TO CAMINO DEL CAMPO

CROSS-SECTIONS
WEST ALAMEDA

CN: S100280

Sheet 13-15

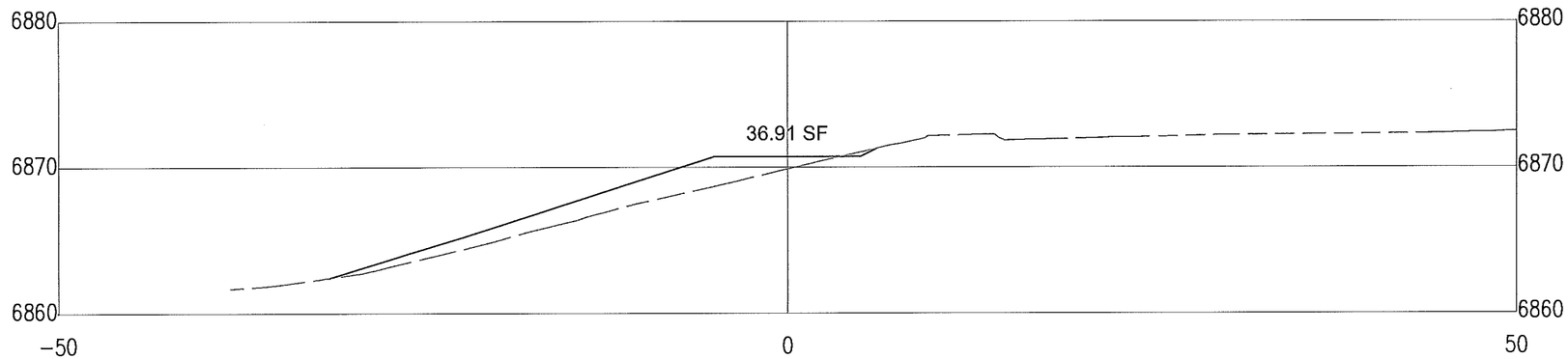

300+20

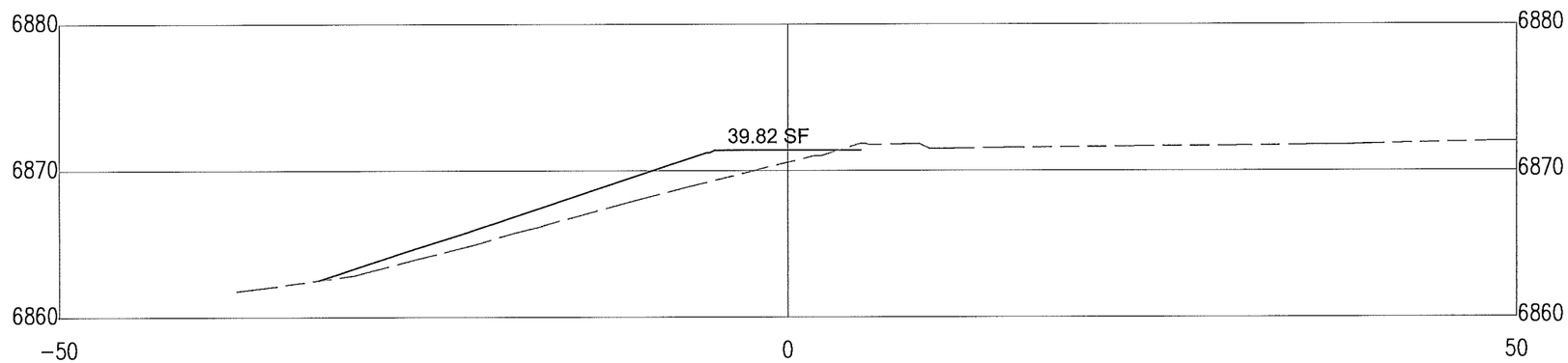

300+10

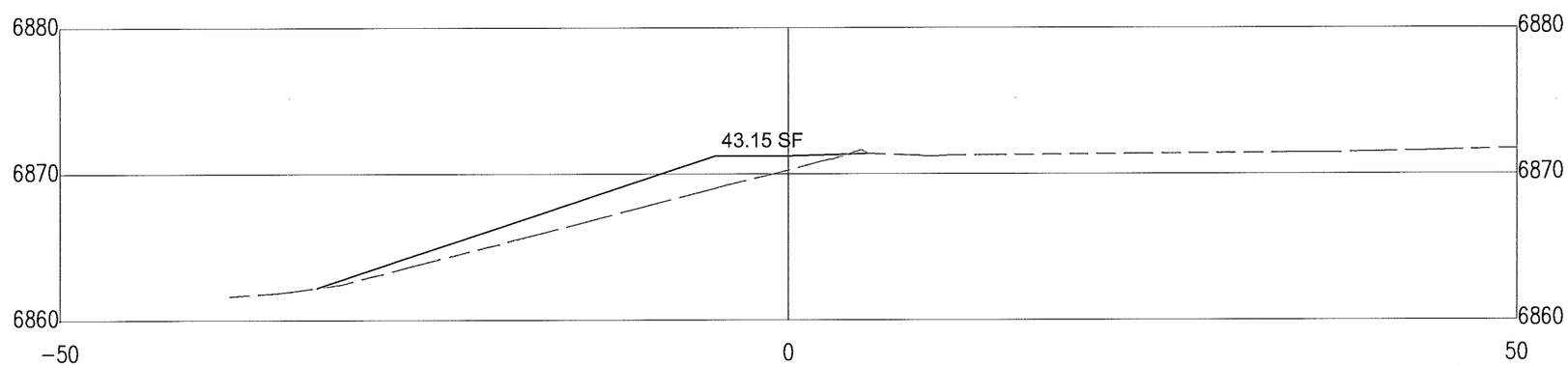

300+00

P:\20140268\TRANS\Design\Plan Production\Plans\20140268-CrossSecs.dwg
Thu, 13-Nov-2014 - 1:03:pm, Plotted by: LAHINDE

JEANETTE A. WALTHER
NEW MEXICO
11243
10/21/14
REGISTERED PROFESSIONAL ENGINEER

No.	Date	REVISIONS	By

Designed By:	JAW	DATE: 07/2014
Drawn By:	LAH	DATE: 07/2014
Checked By:	JAW	DATE: 07/2014

Bohannan Huston
www.bhinc.com 800.877.5332

CITY OF SANTA FE

SANTA FE RIVER TRAIL
CONNECTIONS AND IMPROVEMENTS, PHASE 1
CAMINO DE CHELLY / AGUA FRIA TO CAMINO DEL CAMPO

CROSS-SECTIONS
ALTO PARK

CN: S100280

Sheet 13-16

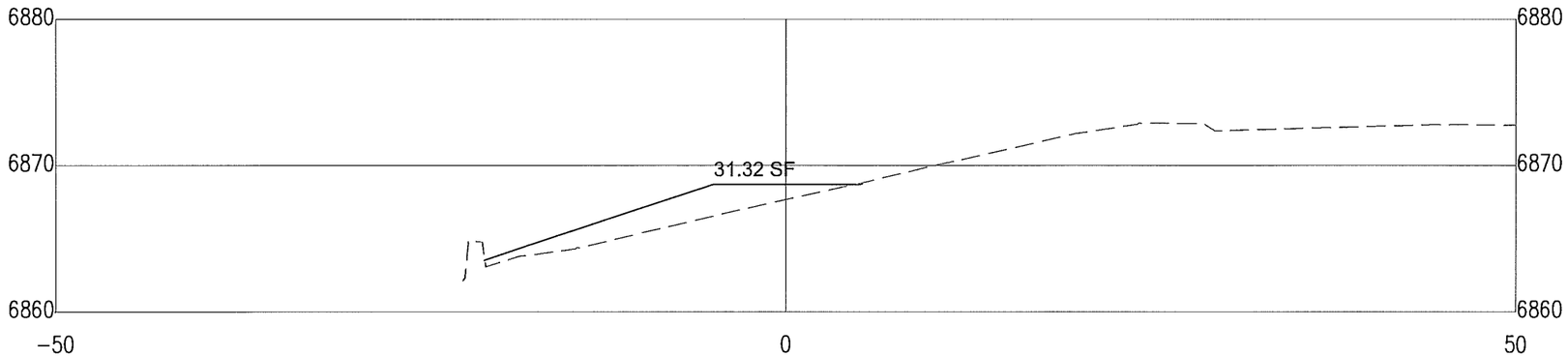

300+50

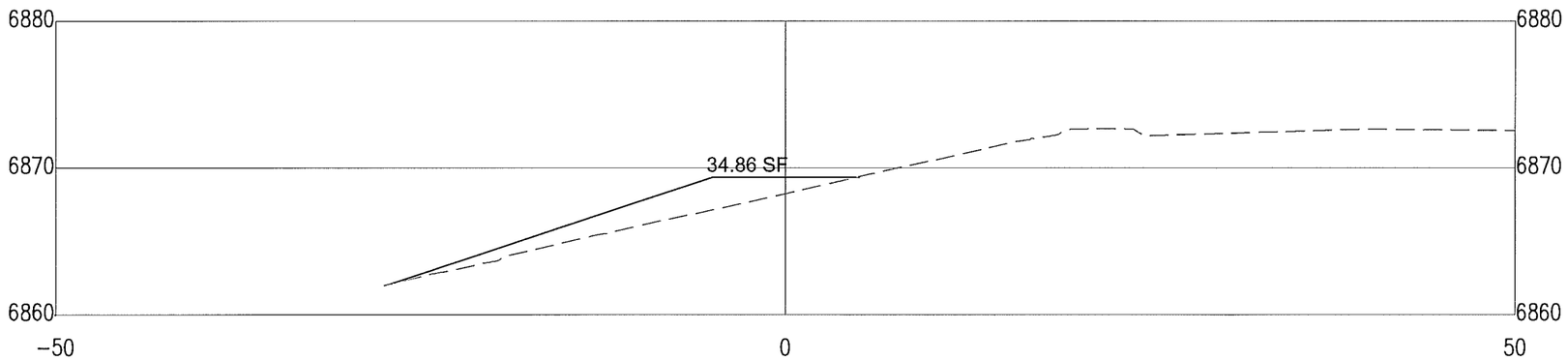

300+40

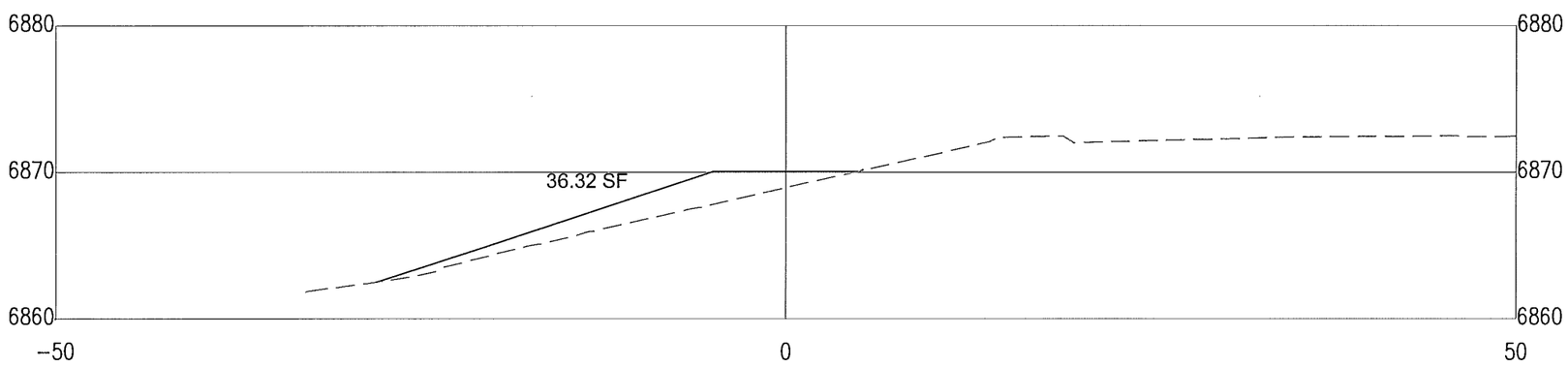

300+30

P:\20140268\TRANS\Design\Plan Production\Plans\20140268-CrossSecs.dwg
Thu, 13-Nov-2014 - 1:03:pm, Plotted by: LAHINDE

JEANETTE A. WALTHER
NEW MEXICO
11243
10/21/14
REGISTERED PROFESSIONAL ENGINEER

No.	Date	REVISIONS	By

Designed By:	JAW	DATE: 07/2014
Drawn By:	LAH	DATE: 07/2014
Checked By:	JAW	DATE: 07/2014

Bohannan Huston
www.bhinc.com 800.877.5332

CITY OF SANTA FE

SANTA FE RIVER TRAIL
CONNECTIONS AND IMPROVEMENTS, PHASE 1
CAMINO DE CHELLY / AGUA FRIA TO CAMINO DEL CAMPO

CROSS-SECTIONS
ALTO PARK

CN: S100280

Sheet 13-17

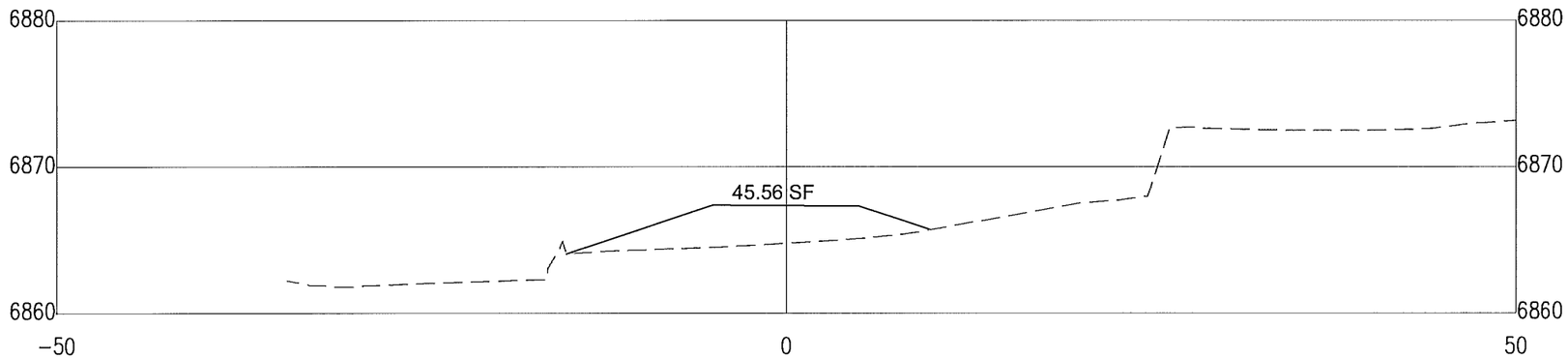

300+80

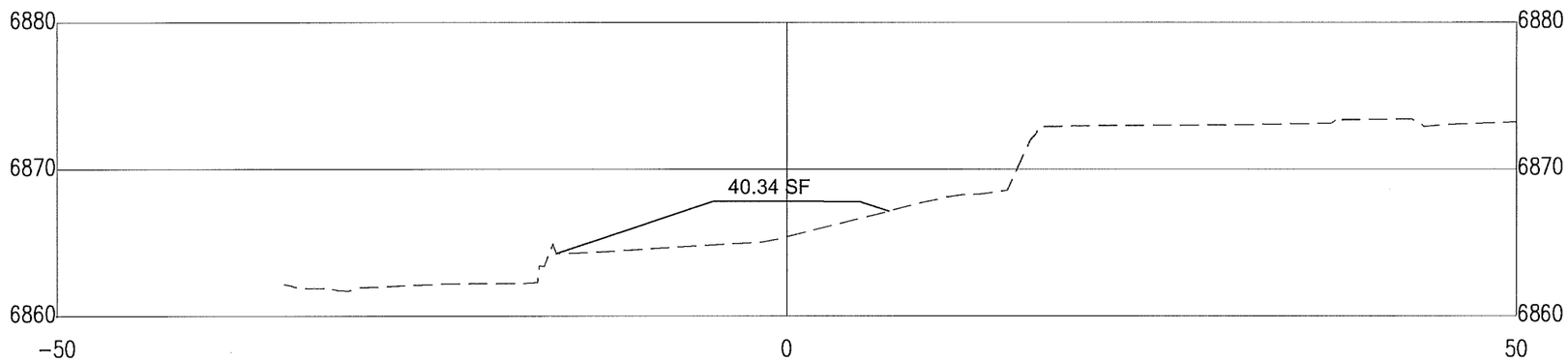

300+70

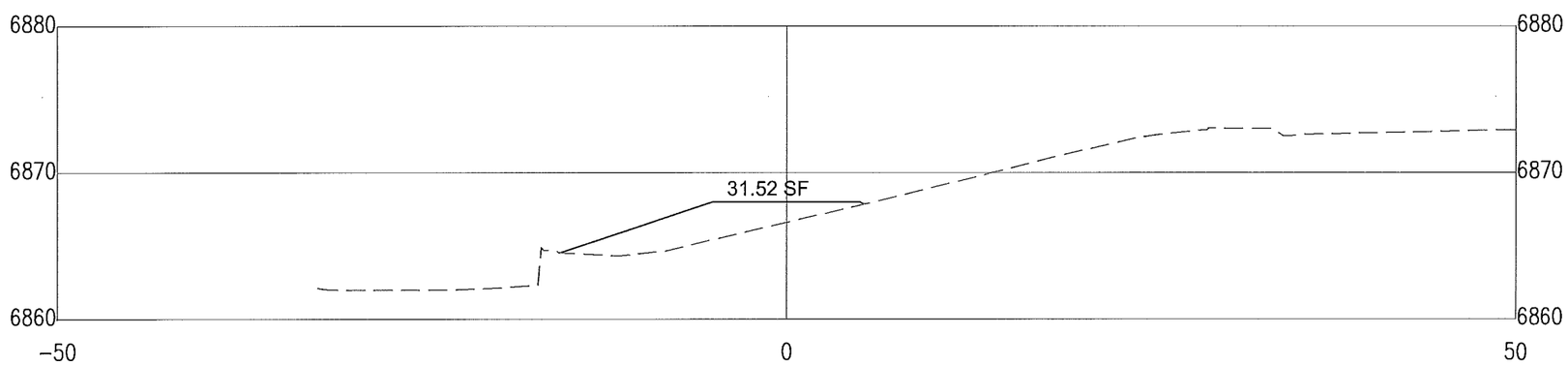

300+60

P:\20140268\TRANS\Design\Plan Production\Plans\20140268-CrossSecs.dwg
Thu, 13-Nov-2014 - 1:03:pm, Plotted by: LAHINDE

JEANETTE A. WALTHER
NEW MEXICO
11243
10/21/14
REGISTERED PROFESSIONAL ENGINEER

No.	Date	REVISIONS	By

Designed By:	JAW	DATE: 07/2014
Drawn By:	LAH	DATE: 07/2014
Checked By:	JAW	DATE: 07/2014

Bohannan Huston
www.bhinc.com 800.877.5332

CITY OF SANTA FE

SANTA FE RIVER TRAIL
CONNECTIONS AND IMPROVEMENTS, PHASE 1
CAMINO DE CHELLY / AGUA FRIA TO CAMINO DEL CAMPO

CROSS-SECTIONS
ALTO PARK

CN: S100280

Sheet 13-18

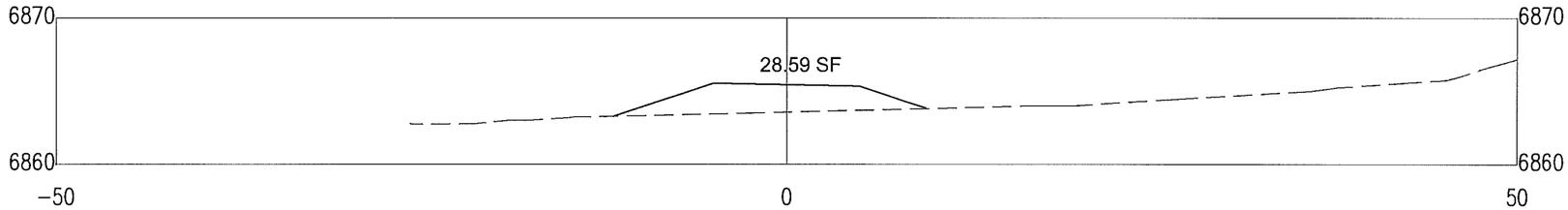

301+20

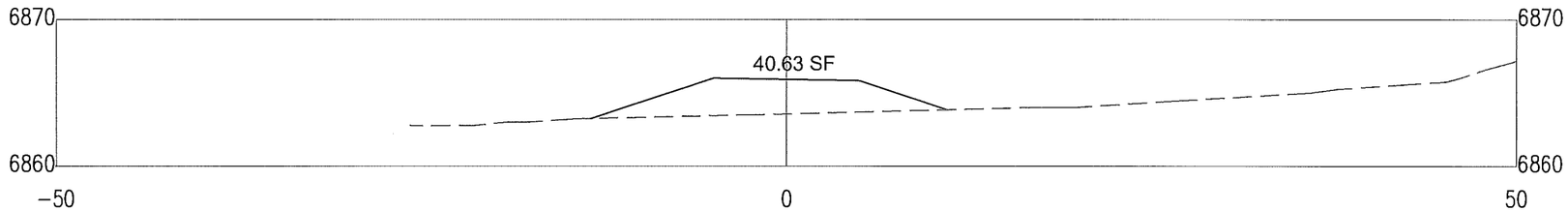

301+10

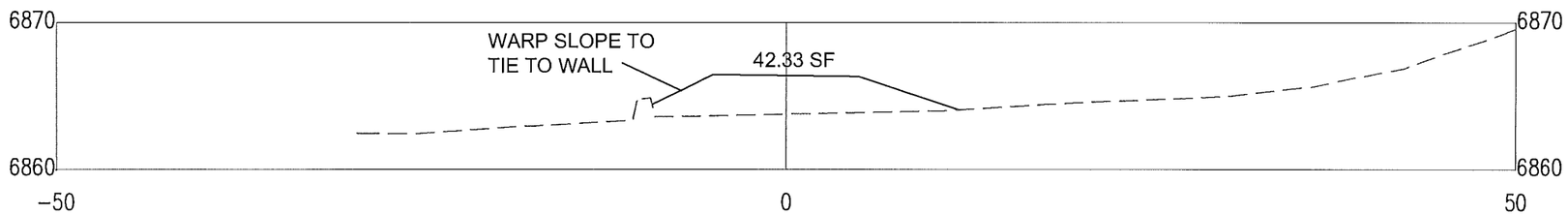

301+00

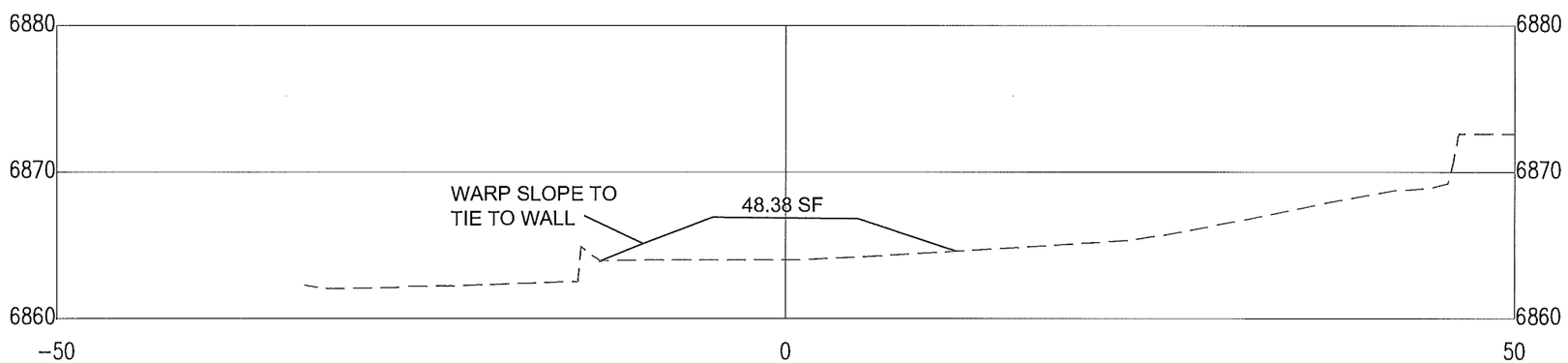

300+90

P:\20140268\TRANS\Design\Plan Production\Plans\20140268-CrossSecs.dwg
Thu, 13-Nov-2014 - 1:03:pm, Plotted by: LAHINDE

JEANETTE A. WALTHER
NEW MEXICO
11243
10/21/14
REGISTERED PROFESSIONAL ENGINEER

No.	Date	REVISIONS	By

Designed By:	JAW	DATE: 07/2014
Drawn By:	LAH	DATE: 07/2014
Checked By:	JAW	DATE: 07/2014

Bohannan Huston
www.bhinc.com 800.877.5332

CITY OF SANTA FE
SANTA FE RIVER TRAIL
CONNECTIONS AND IMPROVEMENTS, PHASE 1
CAMINO DE CHELLY / AGUA FRIA TO CAMINO DEL CAMPO

CROSS-SECTIONS
ALTO PARK

CN: S100280

Sheet
13-19

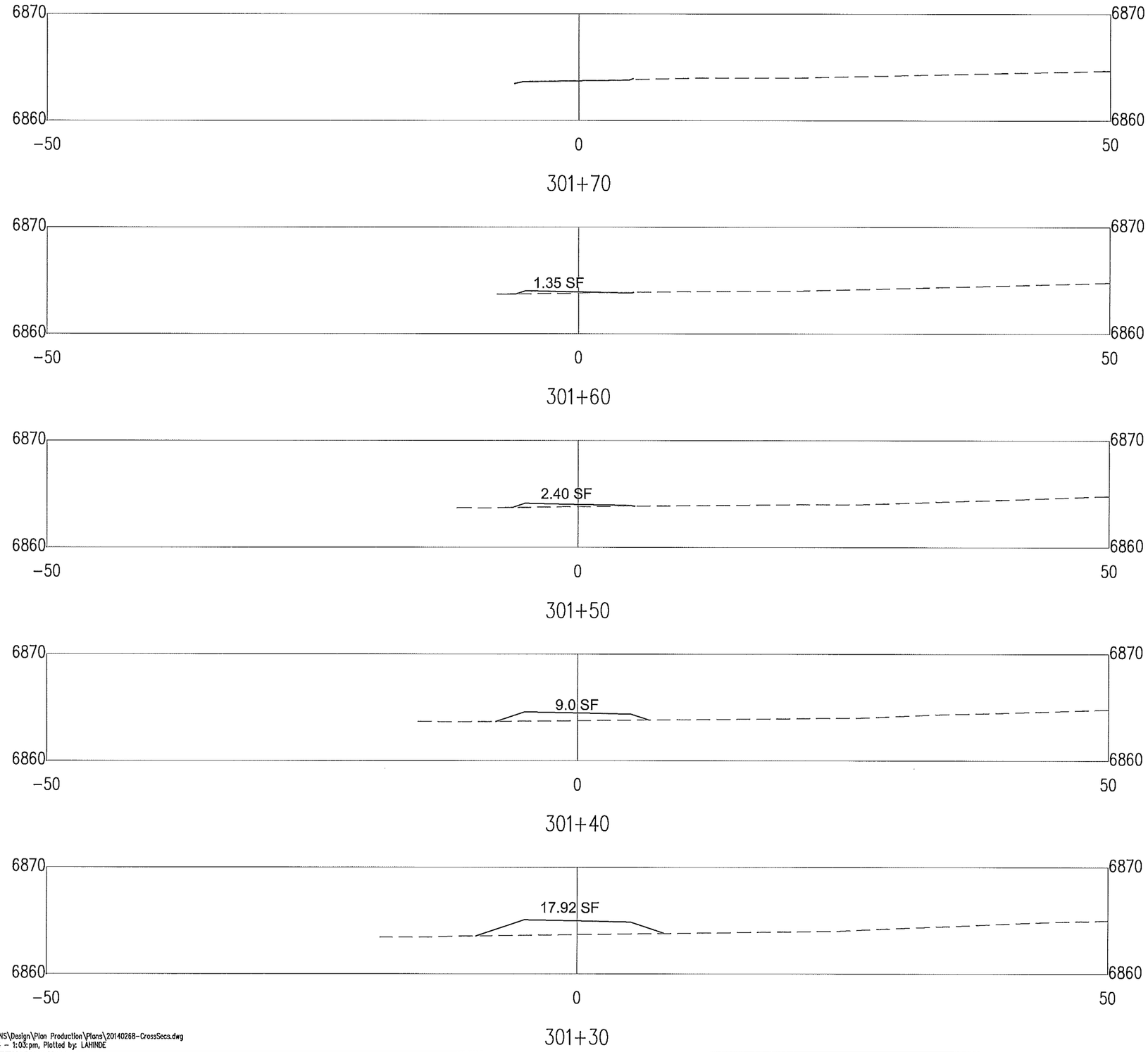

P:\20140268\TRANS\Design\Plan Production\Plans\20140268-CrossSecs.dwg
Thu, 13-Nov-2014 - 1:03pm, Plotted by: LAHINDE

JEANETTE A. WALTHER
NEW MEXICO
11243
10/21/14
REGISTERED PROFESSIONAL ENGINEER

No.	Date	REVISIONS	By

Designed By:	JAW	DATE: 07/2014
Drawn By:	LAH	DATE: 07/2014
Checked By:	JAW	DATE: 07/2014

Bohannan Huston
www.bhinc.com 800.877.5332

CITY OF SANTA FE

SANTA FE RIVER TRAIL
CONNECTIONS AND IMPROVEMENTS, PHASE 1
CAMINO DE CHELLY / AGUA FRIA TO CAMINO DEL CAMPO

CROSS-SECTIONS
ALTO PARK

CN: S100280

Sheet 13-20

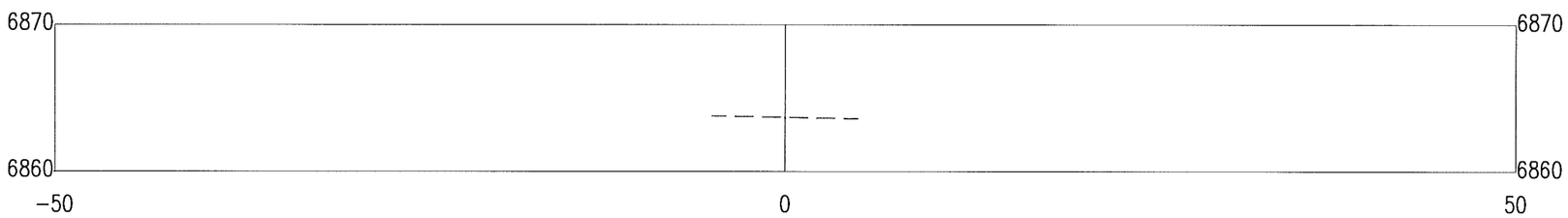

301+87

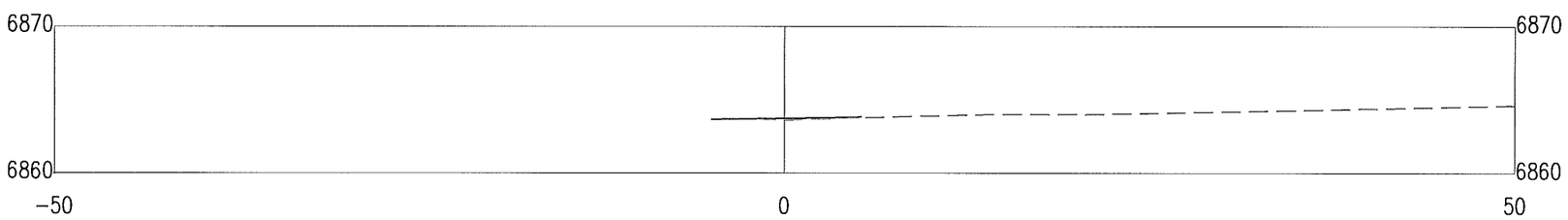

301+80

P:\20140268\TRANS\Design\Plan Production\Plans\20140268-CrossSecs.dwg
Thu, 13-Nov-2014 – 1:03:pm, Plotted by: LAHINDE

JEANETTE A. WALTHER
NEW MEXICO
11243
10/21/14
REGISTERED PROFESSIONAL ENGINEER

No.	Date	REVISIONS	By

Designed By:	JAW	DATE: 07/2014
Drawn By:	LAH	DATE: 07/2014
Checked By:	JAW	DATE: 07/2014

Bohannan Huston
www.bhinc.com 800.877.5332

CITY OF SANTA FE

SANTA FE RIVER TRAIL
CONNECTIONS AND IMPROVEMENTS, PHASE 1
CAMINO DE CHELLY / AGUA FRIA TO CAMINO DEL CAMPO

CROSS-SECTIONS
ALTO PARK

CN: S100280

Sheet 13-21