CITY OF SANTA FE
CONSTRUCTION PLANS

CERRILLOS ROAD RECONSTRUCTION
PHASE IIC
CAMINO CARLOS REY TO LLANO STREET

PROJECT NO. CN S100130
CONTROL NO. CN S100130
CIP #810A

NMDOT

DEPARTMENT OF TRANSPORTATION
UNITED STATES OF AMERICA

JAMES H. BUCKMAN
NEW MEXICO
13062
4/29/15
REGISTERED PROFESSIONAL ENGINEER

APPROVED BY CITY OF SANTA FE Isaac J. Pino PUBLIC WORKS DIRECTOR	APPROVED BY CITY OF SANTA FE ENGINEERING DIVISION DIRECTOR
REVIEWED BY CITY OF SANTA FE HISTORIC PRESERVATION DIVISION HISTORIC PRESERVATION DIVISION DIRECTOR	REVIEWED BY CITY OF SANTA FE MAYOR'S COMMITTEE ON DISABILITY ADA COORDINATOR

CITY OF SANTA FE	SHEET
NEW MEXICO PROJECT NO.	NO.
CN S100130	1–2

CONVENTIONAL SIGNS

ON PLAN

STATE LINE
COUNTY LINE
LAND GRANT LINE
TOWNSHIP OR RANGE LINE
SECTION LINE
CITY OR TOWN LIMIT
UNFENCED PROPERTY LINE
REFERENCE LINE & POINT
WIRE FENCE
RAIL FENCE
STONE OR ADOBE FENCE
PICKET FENCE
TELEPHONE–TELEGRAPH LINE
PROTECTION DITCH & DIKE
RETAINING WALL
ARROYO
RIVER OR CREEK
IRRIGATION DITCH
CONCRETE SIDEWALK
PRESENT TRAVELED ROAD
TRAIL
RAILROAD–TITLE PAGE
RAILROAD–PLAN PAGE

RIGHT OF WAY LINE
P.C. 5+52.1
P.T. 6+73.4
SURVEY CENTER LINE
RAILROAD CATTLEGUARD
HIGHWAY CATTLEGUARD
BRIDGE
CULVERT SPILLWAY
HOUSE & VACANT
CHURCH CEMETERY SCHOOL
TOWN–TITLE PAGE
BLUFF OR HILL
SURFACING PIT
TREE
WINDMILL
ARTESIAN WATER
SECTION CORNER
BM X 1235 BENCH MARK

ON PROFILE

BRIDGE
PIPE CULVERT
BOX CULVERT
VERTICAL CURVE
DATUM LINE 6112.7
GROUND ELEVATION
DATUM LINE 6112.7
GRADE ELEVATION

LENGTH OF PROJECT 0.587 IN MILES

LENGTH OF RIGHT–OF–WAY 0.587 IN MILES

VICINITY MAP

END OF PROJECT STA. 172+00.00

PROJECT NO. CN S100130
TOWNSHIP 17N, RANGE 9E, SECTION 34

BEGINNING OF PROJECT STA. 141+00.00

PROJECT NO. CN S100130
TOWNSHIP 17N, RANGE 9E, SECTION 33

BOOK NUMBERS

NOTES

SCALES
- PLAN 1" = 50' & 1" = 100'
- PROFILE 1" = 5'
- LAYOUT 1" = 20'

SHIPPING POINTS

SANTA FE

THE 2014 EDITION OF NEW MEXICO DEPARTMENT OF TRANSPORTATION STANDARD SPECIFICATIONS FOR HIGHWAY AND BRIDGE CONSTRUCTION SHALL GOVERN CONSTRUCTION OF THIS PROJECT.

INTENT OF PROJECT

CERRILLOS ROAD IMPROVEMENTS TO INCLUDE WIDENING FOR THE ADDITION OF AN ACCESS LANE, NEW BIKE LANE, NEW DRIVEWAYS, NEW BUS STOPS, AND LANDSCAPING IN EACH DIRECTION. IMPROVEMENTS WILL ALSO INCLUDE A NEW STORM DRAIN SYSTEM, NEW UTILITIES, LIGHTING AND SIGNALS.

THESE PLANS WERE DESIGNED AND ASSEMBLED BY:

PARSONS BRINCKERHOFF
6100 UPTOWN BLVD., NE – SUITE 700
Albuquerque, NM 87110 – (505) 881–5357
JIM BUCKMAN P.E.
PHONE: (505)881–5357
E–MAIL: Buckman@pbworld.com

JAMES H. BUCKMAN NEW MEXICO 13062 REGISTERED PROFESSIONAL ENGINEER 10/9/15

NO.	DESCRIPTION	DATE	BY
3			
2			
1			

REVISIONS (OR CHANGE NOTICES)

CITY OF SANTA FE

CERRILLOS ROAD PHASE IIC
CAMINO CARLOS REY TO
LLANO STREET
SANTA FE COUNTY

VICINITY MAP

DESIGNED BY: PB	DRAWN BY: PB	CHECKED BY: JB
DATE: 08/07/15	DATE: 08/07/15	DATE: 08/07/15

INDEX OF SHEETS AND STANDARD DRAWINGS

SHEET NO.	DESCRIPTION	REV. DATE	STANDARD DRAWINGS
1-1	COVER SHEET		
1-2	VICINITY MAP		
1-3	INDEX OF SHEETS AND STANDARD DRAWINGS		
1-4 to 1-6	SUMMARY OF QUANTITIES		
1-7 to 1-9	GENERAL NOTES		
1-10	ENVIRONMENTAL COMMITMENTS		
	SUBTOTAL = 10		
2-1	EXISTING TYPICAL SECTION / PROPOSED TYPICAL SECTION		
2-2 to 2-3	PROPOSED TYPICAL SECTIONS/DETAILS		
2-4	SURFACING SCHEDULE		
2-5 to 2-6	ESTIMATED STRUCTURE QUANTITIES		
2-7 to 2-10	MISCELLANEOUS QUANTITIES		
2-11 to 2-13	REMOVAL OF STRUCTURES AND OBSTRUCTIONS		
2-14	MISCELLANEOUS DRIVEPAD AND CURB DETAILS		
2-15	CURB RAMP DETAILS		
2-16	MODIFIED INLET DETAILS		
2-17	MISCELLANEOUS DETAILS		
2-18 to 2-20	STORM SEWER STANDARD CONSTRUCTION DETAILS		
2-21	MISCELLANEOUS DETAILS		
2-22	TEMPORARY EROSION AND SEDIMENT CONTROL NOTES		
2-23	SWPPP INFORMATION		
2-24	RUSLE CALCULATIONS		
	SUBTOTAL = 24		
3-0	PROJECT OVERVIEW SHEET		
3-00	CENTERLINE SURVEY CONTROL		
3-1 to 3-3	ROADWAY PLAN AND PROFILE SHEETS		
3-4 to 3-6	STORM DRAIN PLAN AND PROFILE		
3-7 to 3-13	CERRILLOS ROAD LAYOUT PLAN		
3-14 to 3-22	SIDESTREET LAYOUT PLAN		
3-23 to 3-25	SIDESTREET PROFILES		
	SUBTOTAL = 27		
4-1 to 4-4	TURNOUT SECTIONS		
	SUBTOTAL = 4		
6-1 to 6-2	TRAFFIC CONTROL GENERAL NOTES		
6-3	TRAFFIC CONTROL QUANTITIES		
6-4	TRAFFIC CONTROL LAYOUT AND SEQUENCING		
6-4A	PEDESTRIAN DETOUR PLAN STAGE I (PHASE B)		
6-4B	PEDESTRIAN DETOUR PLAN STAGE II (PHASE C & D)		
6-5 to 6-6	TRAFFIC CONTROL TYPICAL SECTIONS		
6-7	TRAFFIC CONTROL SIGN FACE DETAILS		
6-8	B.O.P. & E.O.P. SIGNING		
6-9	MAINTENANCE OF ACCESS DETAILS		
6-10 to 6-12	TRAFFIC CONTROL - PHASE A		
6-13 to 6-15	TRAFFIC CONTROL - PHASE B		
6-16 to 6-18	TRAFFIC CONTROL - PHASE C		
6-19 to 6-21	TRAFFIC CONTROL - PHASE D-I		
6-22 to 6-24	TRAFFIC CONTROL - PHASE D-II		
6-25 to 6-27	TRAFFIC CONTROL - PHASE D-III		
6-28	TEMPORARY SIGNAL SPAN NOTES & DETAILS		
6-29	TEMPORARY SIGNAL SPAN ESTIMATED QUANTITIES		
6-30 to 6-31	TEMPORARY SIGNAL SPAN LAYOUTS		
	SUBTOTAL = 33		
7-1 to 7-3	PERMANENT SIGNING AND STRIPING PLANS		
7-4 to 7-6	PERMANENT SIGNING AND STRIPING DETAILS		
7-7	PERMANENT SIGNING AND STRIPING QUANTITIES		
	SUBTOTAL = 7		
8-1	ROADWAY LIGHTING NOTES, QUANTITIES, LEGEND, AND INCIDENTAL ITEMS		
8-2 to 8-4	LIGHTING PLANS		
8-5	LIGHTING CONDUIT & CONDUCTOR SCHEDULE		
	SUBTOTAL = 5		
9-1	TRAFFIC SIGNAL INSTALLATION GENERAL NOTES		
9-2	TRAFFIC SIGNAL ESTIMATED QUANTITIES		
9-3	TRAFFIC SIGNAL REMOVAL PLAN CERRILLOS ROAD/LUJAN STREET		
9-4 to 9-5	TRAFFIC SIGNAL PLAN CERRILLOS ROAD/LUJAN STREET		
9-6 to 9-7	TRAFFIC SIGNAL CABLES & CONDUITS CERRILLOS ROAD/LUJAN STREET		
9-8	TRAFFIC SIGNAL FUNCTION CHARTS & SIGNAL QUANTITIES CERRILLOS/LUJAN		
9-9	TRAFFIC SIGNAL REMOVAL PLAN CERRILLOS ROAD/ST. MICHAEL'S DRIVE		
9-10 to 9-11	TRAFFIC SIGNAL PLAN CERRILLOS ROAD/ST. MICHAEL'S DRIVE		
9-12 to 9-13	TRAFFIC SIGNAL CABLES & CONDUITS CERRILLOS ROAD/ST. MICHAEL'S DRIVE		
9-14	TRAFFIC SIGNAL FUNCTION CHARTS & SIGNAL QTY'S CERRILLOS/ST.MICHAEL'S		
9-15	ITS SYSTEM PLAN GENERAL NOTES & QUANTITIES		
9-16 to 9-20	INTERCONNECT PLAN		
	SUBTOTAL = 20		

INDEX OF SHEETS AND STANDARD DRAWINGS (CONTINUED)

SHEET NO.	DESCRIPTION	REV. DATE	STANDARD DRAWINGS
10-1 to 10-3	STRUCTURE PLACEMENT SECTIONS		
	SUBTOTAL = 3		
11-1 to 11-3	EXISTING UTILITIES		
11-4	WATER AND SANITARY SEWER GENERAL NOTES AND LEGEND		
11-5 to 11-8	WATER AND SEWER QUANTITIES		
11-9 to 11-10	WATER AND SEWER DETAILS		
11-11 to 11-15	WATER AND SEWER PLAN AND PROFILE SHEETS		
11-16	WATER CROSS SECTIONS CERRILLOS ROAD		
11-17	PRV DETAILS		
11-18	GENERAL LAYOUT DETAIL ABOVE GROUND INSTALLATION		
11-19	WATER AND SEWER DETAILS		
11-20	PRV STATION NO. 5 PLAN		
11-21 to 11-24	SANITARY SEWER STANDARD CONSTRUCTION DETAILS		
	SUBTOTAL = 24		
12-1	LANDSCAPE NOTES & QUANTITIES		
12-2 to 12-5	LANDSCAPE PLANS		
12-6	LANDSCAPE DETAILS		
12-7	HARDSCAPE DETAILS		
12-8 to 12-11	IRRIGATION PLANS		
12-12	IRRIGATION DETAILS		
12-13	IRRIGATION DETAILS		
12-14 to 12-15	ELECTRIC SERVICE, LANDSCAPE METER AND PULL BOX DETAILS		
12-16 to 12-17	PEDESTRIAN PLAZA AND BUS STATION DETAILS		
12-18	STELE DETAILS		
12-19 to 12-21	14' BUS SHELTER STRUCTURAL PLAN AND ELEVATIONS		
	SUBTOTAL = 21		
13-1	SIDEWALK CURB AND GUTTER	11-16-09	609-01-1/1
13-2	TEMPORARY EROSION AND SEDIMENT CONTROL MEASURES	11-29-04	603-01-1/7
13-3	TEMPORARY EROSION & SEDIMENT CONTROL MEASURES CHECK DAMS	11-29-04	603-01-2/7
13-4	TEMPORARY EROSION & SEDIMENT CONTROL MEASURES SILT FENCE	11-29-04	603-01-3/7
13-5	TEMPORARY EROSION & SEDIMENT CONTROL MEASURES CULVERT & DROP INLET PROTECTION	11-29-04	603-01-4/7
13-6	T.E.S.C.M. SEDIMENT BASIN, SEDIMENT TRAP & EARTH DIKE	11-29-04	603-01-5/7
13-7	TEMPORARY EROSION & SEDIMENT CONTROL MEASURES PIPE SLOPE DRAIN & SURFACE ROUGHENING	11-29-04	603-01-6/7
13-8	T.E.S.C.M. OFFSITE TRACKING PREVENTION & DIVERSION DIKE	11-29-04	603-01-7/7
13-8A to 13-8L	PEDESTRIAN ACCESS DETAILS	01-13-15	608-001
13-9	OVERHEAD SIGNS TUBULAR GENERAL NOTES	5-30-06	701-01-1/14
13-10	OVERHEAD SIGNS TUBULAR LAYOUT AND PIPE SELECTION SINGLE POST TYPE	5-30-06	701-01-3/14
13-11	OVERHEAD SIGNS TUBULAR FOUNDATION DETAILS	6-8-06	701-01-4/14
13-12	OVERHEAD SIGNS TUBULAR GENERAL DETAILS	5-30-06	701-01-5/14
13-13	OVERHEAD SIGNS TUBULAR PANEL SIGN SUPPORT WELDED	5-30/06	701-01-6/14
13-14	OVERHEAD SIGNS TUBULAR ELECTRICAL DETAILS	5-30-06	701-01-7/14
13-15	OVERHEAD SIGNS TUBULAR ELECTRICAL DETAILS CONTINUED	5-30-06	701-01-8/14
13-16	ALUMINUM SIGN PANEL DETAILS	1-11-05	701-03-1/2
13-17	ALUMINUM SIGN PANEL DETAILS	1-11-05	701-03-2/2
13-18	EXTRUDED PANEL SIGN FRAME DETAILS	1-11-05	701-04-1/1
13-19	EXTRUDED PANEL SIGN ASSEMBLY DETAILS	1-11-05	701-05-1/2
13-20	EXTRUDED PANEL SIGN ASSEMBLY DETAILS	1-11-05	701-05-2/2
13-21	CONSTRUCTION SIGN FACE DETAILS	4-25-05	702-01-1/3
13-22	CHANNELIZATION DEVICES AND PORTABLE SIGN SUPPORTS FOR CONST., MAINT., UTIL., AND INCIDENT MGMT., OPERATIONS	4-25-05	702-01-2/3
13-23	CONSTRUCTION TRAFFIC NOTES	2-28-07	702-01-3/3
13-24	DOUBLE FINES IN WORK ZONES SIGNING LAYOUT	4-17-08	702-02-1/2
13-25	DOUBLE FINES IN WORK ZONES SIGN FACE DETAILS	4-17-08	702-02-2/2
13-26	TEMPORARY PRE-CAST CONCRETE WALL BARRIER	6-18-14	606-20-1/5
13-27	TEMPORARY PRE-CAST CONCRETE WALL BARRIER DETAILS	1-10-13	606-20-2/5
13-28	TEMPORARY PRE-CAST CONCRETE WALL BARRIER ANCHORING DETAILS	1-10-13	606-20-3/5
13-29	CONCRETE BARRIER MOUNT FOR SQUARE POST (2" THROUGH 2-1/2")	1-10-13	606-20-4/5
13-30	TEMPORARY PRE-CAST CONCRETE WALL BARRIER TAPER RATES	2-28-07	606-20-5/5
13-31	WORK ZONE ATTENUATOR NEAT TL-2	4-25-08	720-10-2/3
13-32	SMALL SIGN SUPPORT INSTALLATION DETAILS	1-11-05	701-02-1/3
13-33	SMALL SIGN SUPPORT INSTALLATION DETAILS	2-03-05	701-02-2/3
13-34	MULTI-DIRECTIONAL SLIP BASE POST DETAILS	1-11-05	701-02-3/3
13-35	ROADWAY LIGHTING ELECTRICAL SERVICE DETAILS	12-22-04	706L-02-1/1
13-36	ROADWAY LIGHTING SUPPORT STRUCTURES TYPE "V" GENERAL NOTES	10-25-11	707L-07-1/11
13-37	ROADWAY LIGHTING SUPPORT STRUCTURES TYPE "V" POLE ELEVATIONS AND DIMENSI	10-25-11	707L-07-2/11
13-38	ROADWAY LIGHTING SUPPORT STRUCTURES TYPE "V" ARM AND TENSION DETAILS	10-25-11	707L-07-3/11
13-39	ROADWAY LIGHTING SUPPORT STRUCTURES TYPE "V" HAND HOLE DETAILS	10-25-11	707L-07-4/11
13-40	ROADWAY LIGHTING SUPPORT STRUCTURES TYPE "V" BASE PLATE AND ANCHOR BOLT	10-25-11	707L-07-5/11
13-41	ROADWAY LIGHTING SUPPORT STRUCTURES TYPE "V" BASE PLATE AND ANCHOR BOLT	10-25-11	707L-07-6/11
13-42	ROADWAY LIGHTING SUPPORT STRUCTURES TYPE "V" BREAKAWAY DETAILS	10-25-11	707L-07-7/11
13-43	ROADWAY LIGHTING SUPPORT STRUCTURES TYPE "V" FOUNDATION GENERAL NOTES	10-25-11	707L-07-9/11
13-44	ROADWAY LIGHTING SUPPORT STRUCTURES TYPE "V" DRILLED SHAFT DETAILS	10-25-11	707L-07-10/11
13-45	ELECTRICAL SERVICE DETAILS FOR SIGNALS	12-22-04	706S-01-1/1
13-46	TYPE I POLE AND PEDESTRIAN SIGNAL DETAILS	1-19-05	707S-01-1/1
13-47	SIGN, SIGNAL, AND LUMINARE SUPPORT STRUCTURES GENERAL NOTES	12-21-11	707S-02-1/1
13-48	SIGN, SIGNAL, AND LUMINARE SUPPORT STRUCTURES TYPE IIA AND IIIA	12-21-11	707S-03A-1/2
13-49	SIGN, SIGNAL, AND LUMINARE SUPPORT STRUCTURES TYPE IIA AND IIIA	12-21-11	707S-03A-2/2
13-50	SIGN, SIGNAL, AND LUMINARE SUPPORT STRUCTURES TYPE IIB AND IIIB	12-21-11	707S-03B-1/2
13-51	SIGN, SIGNAL, AND LUMINARE SUPPORT STRUCTURES TYPE IIB AND IIIB	12-21-11	707S-03B-2/2
13-52	SIGN, SIGNAL, AND LUMINARE SUPPORT STRUCTURES TYPE II AND III	12-21-11	707S-04-1/3
13-53	SIGN, SIGNAL, AND LUMINARE SUPPORT STRUCTURES TYPE II AND III	12-21-11	707S-04-2/3
13-54	SIGN, SIGNAL, AND LUMINARE SUPPORT STRUCTURES TYPE II AND III	12-21-11	707S-04-3/3
13-55	FOUNDATION DETAILS FOR TYPE I STANDARD AND CONTROLLER CABINET	12-22-04	708S-01-1/1
13-56	SIGN, SIGNAL, AND LUMINARE SUPPORT STRUCTURES FOUNDATION DETAILS	12-21-11	708S-02-1/2
13-57	SIGN, SIGNAL, AND LUMINARE SUPPORT STRUCTURES FOUNDATION DETAILS	12-21-11	708S-02-2/2
13-58	MASTARM FOUNDATION GRADING DETAIL	1-19-05	708S-03-1/1
13-59	PULL BOX DETAILS	10-30-14	710S-01-1/1
13-60	TRAFFIC MANHOLE DETAILS	12-22-04	710S-02-1/1
13-61	OPTICAL DETECTOR INSTALLATION DETAILS	12-22-04	713S-01-1/1
13-62	SIGNAL & LIGHTING METER PEDESTAL WITH UPS (DIAGRAM "B") AND ELECTRICAL SCHEMATIC	2-13-15	706S-04-1/2
13-63	DRAINAGE SIDEWALK CULVERT WITH STEEL PLATE TOP	08-1986	2236
13-64	LIGHTING CABINET DIAGRAM L6M 6 CIRCUIT, METERED	2-13-15	706L-08-1/2
	SUBTOTAL = 76		
14-1 to 14-11	CROSS SECTIONS		
	SUBTOTAL = 11		
	TOTAL = 265		

PARSONS BRINCKERHOFF

CITY OF SANTA FE	SHEET
NEW MEXICO PROJECT NO.	NO.
CN S100130	1-3

JAMES H. BUCKMAN — NEW MEXICO — 13062 — REGISTERED PROFESSIONAL ENGINEER — 10/7/15

SCALE
NOT TO SCALE

DESIGNED BY: PB	DRAWN BY: PB	CHECKED BY: JB
DATE: 08/07/15	DATE: 08/07/15	DATE: 08/07/15

NO.	DESCRIPTION	DATE	BY
3			
2			
1			

REVISIONS (OR CHANGE NOTICES)

CITY OF SANTA FE

CERRILLOS ROAD PHASE IIC
CAMINO CARLOS REY TO
LLANO STREET
SANTA FE COUNTY

INDEX OF SHEETS AND
STANDARD DRAWINGS

J:\33693 Cerrillos Ph IIC\04 Engineering-33693\Plans\1_Sheets\1-3 Index of Sheets and Serials.dwg Oct 06, 2015 - 5:12pm Saved By: millernz

N.M. PROJECT NO. CN S100130 SHEET NO. 1-3

PARSONS BRINCKERHOFF

CITY OF SANTA FE	SHEET
NEW MEXICO PROJECT NO.	NO.
CN S100130	1–4

SUMMARY OF QUANTITIES

ITEM NO.	ITEM DESCRIPTION	UNIT	ROADWAY		CONSTRUCTION SIGNING		LIGHTING		PERMANENT SIGNING		SIGNALIZATION		CONSTRUCTION ENGINEERING		STORM DRAIN		LANDSCAPE		UTILITY		PROJECT TOTALS	
			ESTIMATE	FINAL	ESTIMATE	FINAL	ESTIMATE	FINAL	ESTIMATE	FINAL	ESTIMATE	FINAL	ESTIMATE	FINAL	ESTIMATE	FINAL	ESTIMATE	FINAL	ESTIMATE	FINAL	ESTIMATE	FINAL
201000	CLEARING AND GRUBBING	L.S.	L.S.																		L.S.	
203000	UNCLASSIFIED EXCAVATION	CU.YD.	25,000																		25000	
203100	BORROW	CU.YD.	3,000																		3000	
203200	SUBEXCAVATION	CU.YD.	3,000																		3000	
203211	UNSTABLE SUBGRADE STABILIZATION	SQ.YD.	40,635																		40635	
207000	SUBGRADE PREPARATION	SQ.YD.	42,970																		42970	
303015	BASE COURSE	SQ.YD.	42,590																		42590	
303140	BASE COURSE 4"	SQ.YD.	380																		380	
403600	OPEN GRADED FRICTION COURSE COMPLETE	SQ.YD.	40,380																		40380	
405000	DETOUR PAVEMENT CONSTRUCTION	SQ.YD.			3,900																3900	
407000	ASPHALT MATERIAL FOR TACK COAT	TON	30																		30	
408100	PRIME COAT MATERIAL	TON	77																		77	
416000	MINOR PAVEMENT	SQ.YD.	43,690																		43690	
502030	DRILLED SHAFT FOUNDATION 30" DIAMETER	LIN.FT.					130														130	
502036	DRILLED SHAFT FOUNDATION 36" DIAMETER	LIN.FT.									64										64	
502042	DRILLED SHAFT FOUNDATION 42" DIAMETER	LIN.FT.									64										64	
502054	DRILLED SHAFT FOUNDATION 54" DIAMETER	LIN.FT.							15												15	
511000	STRUCTURAL CONCRETE, CLASS A	CU.YD.	72								9										81	
540060	REINFORCING BARS GRADE 60	LBS.					3,100		1,660		238										4998	
570XX1	18" CULVERT PIPE	LIN.FT.													1,086						1086	
570XX2	54" STORM DRAIN	LIN.FT.													490						490	
570XX3	60" STORM DRAIN	LIN.FT.													2,520						2520	
601000	REMOVAL OF STRUCTURES AND OBSTRUCTIONS	L.S.	L.S.																		L.S.	
603281	SWPPP PLAN PREPARATION AND MAINTENANCE	L.S.											L.S.								L.S.	
606610	TEMPORARY CWB RETAINED BY THE CONTRACTOR	LIN.FT.			2,800																2800	
606619	RESETTING OF CONCRETE WALL BARRIER	LIN.FT.			2,800																2800	
608004	CONCRETE SIDEWALK 4"	SQ.YD.	4,000																		4000	
608106	DRIVE PAD 6"	SQ.YD.	1,010																		1010	
608206	CONCRETE MEDIAN PAVEMENT 6"	SQ.YD.	82																		82	
608404	CONCRETE MEDIAN PAVEMENT 4" (COLORED AND PATTERNED)	SQ.YD.	2,540																		2540	
609200	HEADER CURB	LIN.FT.	4,390																		4390	
609201	CUT-OFF WALL	LIN.FT.	940																		940	
609324	CONCRETE SLOPED CURB AND GUTTER 6" X24"	LIN.FT.	16																		16	
609424	CONCRETE VERTICAL CURB AND GUTTER TYPE B 6"X24"	LIN.FT.	7,320																		7320	
609472	CONCRETE VERTICAL CURB AND GUTTER TYPE D 6"X12"	LIN.FT.	7,520																		7520	
609478	CONCRETE VERTICAL CURB AND GUTTER TYPE D 6"X18"	LIN.FT.	590																		590	
609636	CONCRETE VALLEY GUTTER 6"X36"	LIN.FT.	430																		430	
609706	CONCRETE LAYDOWN CURB 6"	LIN.FT.	772																		772	

JAMES H. BUCKMAN NEW MEXICO 13062 10/7/15 REGISTERED PROFESSIONAL ENGINEER

NO.	DESCRIPTION	DATE	BY
3			
2			
1			

REVISIONS (OR CHANGE NOTICES)

CITY OF SANTA FE

CERRILLOS ROAD PHASE IIC
CAMINO CARLOS REY TO
LLANO STREET
SANTA FE COUNTY

SUMMARY OF QUANTITIES

SCALE
NOT TO SCALE

DESIGNED BY: PB	DRAWN BY: PB	CHECKED BY: JB
DATE: 08/07/15	DATE: 08/07/15	DATE: 08/07/15

J:\33693 Cerrillos Ph IIC\04 Engineering–33693\Plans\1_Sheets\1–4 to 1–6 Summary of Quantities.dwg Oct 06, 2015 – 5:14pm Saved By: millernz

N.M. PROJECT NO. CN S100130 SHEET NO. 1–4

PARSONS BRINCKERHOFF

CITY OF SANTA FE	SHEET
NEW MEXICO PROJECT NO.	NO.
CN S100130	1–5

SUMMARY OF QUANTITIES (CONTINUED)

ITEM NO.	ITEM DESCRIPTION	UNIT	ROADWAY		CONSTRUCTION SIGNING		LIGHTING		PERMANENT SIGNING		SIGNALIZATION		CONSTRUCTION ENGINEERING		STORM DRAIN		LANDSCAPE		UTILITY		PROJECT TOTALS	
			ESTIMATE	FINAL	ESTIMATE	FINAL	ESTIMATE	FINAL	ESTIMATE	FINAL	ESTIMATE	FINAL	ESTIMATE	FINAL	ESTIMATE	FINAL	ESTIMATE	FINAL	ESTIMATE	FINAL	ESTIMATE	FINAL
618000	TRAFFIC CONTROL MANAGEMENT	L.S.			L.S.								L.S.								L.S.	
621000	MOBILIZATION	L.S.	L.S.																		L.S.	
623340M	CURB DROP INLET SPECIAL DESIGN (MOD TYPE-B)	EACH													19						19	
662XX1	MANHOLE TYPE T-4' DIAMETER	EACH													9						9	
663049	PRE-CONSTRUCTION UTILITY SURVEY	L.S.	L.S.																		L.S.	
663206	WATER SYSTEM	L.S.																	L.S.		L.S.	
663207	SEWER SYSTEM	L.S.																	L.S.		L.S.	
664000	LANDSCAPE, COMPLETE	L.S.															L.S.				L.S.	
701000	PANEL SIGNS	SQ.FT.							730												730	
701010	EXTRUDED PANEL SIGNS	SQ.FT.							150												150	
701100	STEEL POST AND BASE POST FOR ALUMINUM PANEL SIGNS	LIN.FT.							1,430												1430	
701341	OVERHEAD SIGN STRUCTURE, BUTTERFLY TYPE, 24-INCH	EACH							1												1	
702610	PORTABLE CHANGEABLE MESSAGE SIGN	EACH			3																3	
702700	TEMPORARY SIGNAL SPAN	L.S.			L.S.																L.S.	
702810	TRAFFIC CONTROL DEVICES FOR CONSTRUCTION	L.S.			L.S.																L.S.	
704000	RETROREFLECTORIZED PAINTED MARKINGS 4"	LIN.FT.							18,647												18647	
704754	RETROREFLECTIVE PREFORMED PATTERNED PAVEMENT STRIPE 4"	LIN.FT.							13,187												13187	
704758	RETROREFLECTIVE PREFORMED PATTERNED PAVEMENT STRIPE 8"	LIN.FT.							57												57	
704762	RETROREFLECTIVE PREFORMED PATTERNED PAVEMENT STRIPE 12"	LIN.FT.							1,275												1275	
704764	RETROREFLECTIVE PREFORMED PATTERNED PAVEMENT STRIPE 24"	LIN.FT.							355												355	
704767	RETROREFLECTIVE PREFORMED PATTERNED PAVEMENT MARKING RIGHT ARROW	EACH							8												8	
704768	RETROREFLECTIVE PREFORMED PATTERNED PAVEMENT MARKING LEFT ARROW	EACH							43												43	
704769	RETROREFLECTIVE PREFORMED PATTERNED PAVEMENT MARKING THRU ARROW	EACH							4												4	
704770	RETROREFLECTIVE PREFORMED PATTERNED PAVEMENT MARKING WORD (ONLY)	EACH							28												28	
704777	RETROREFLECTIVE PREFORMED PATTERNED PAVEMENT MARKING WORD (LANE)	EACH							2												2	
704782	RETROREFLECTIVE PREFORMED PATTERNED PAVEMENT MARKING BIKE SYMBOL (BIKEWAY)	EACH							2												2	
706200	METER PEDESTAL (SIGNAL)	EACH									2										2	
706350	POWER SERVICE INSTALLATION	L.S.					L.S.				L.S.						L.S.				L.S.	
706405	LIGHTING CONTROL CABINET-SIX CIRCUIT	EACH					2														2	
707010	TYPE I STANDARD, 10'	EACH									5										5	
707015	TYPE I STANDARD, 15'	EACH									7										7	
707325	TYPE III STANDARD, 25' ARM	EACH									3										3	
707340	TYPE III STANDARD, 40' ARM	EACH									3										3	
707345	TYPE III STANDARD, 45' ARM	EACH									2										2	
707540	TYPE V STANDARD, 40'	EACH					19														19	

JAMES H. BUCKMAN NEW MEXICO 13062 REGISTERED PROFESSIONAL ENGINEER 10/31/15

NO.	DESCRIPTION	DATE	BY
3			
2			
1			

REVISIONS (OR CHANGE NOTICES)

CITY OF SANTA FE

CERRILLOS ROAD PHASE IIC
CAMINO CARLOS REY TO
LLANO STREET
SANTA FE COUNTY

SUMMARY OF QUANTITIES
(CONTINUED)

SCALE
NOT TO SCALE

DESIGNED BY: PB	DRAWN BY: PB	CHECKED BY: JB
DATE: 08/07/15	DATE: 08/07/15	DATE: 08/07/15

J:\33693 Cerrillos Ph IIC\04 Engineering-33693\Plans\1_Sheets\1-4 to 1-6 Summary of Quantities.dwg Oct 06, 2015 - 5:14pm Saved By: millernz

N.M. PROJECT NO. CN S100130 SHEET NO. 1-5

PARSONS BRINCKERHOFF

CITY OF SANTA FE	SHEET
NEW MEXICO PROJECT NO.	NO.
CN S100130	1–6

SUMMARY OF QUANTITIES (CONTINUED)

ITEM NO.	ITEM DESCRIPTION	UNIT	ROADWAY		CONSTRUCTION SIGNING		LIGHTING		PERMANENT SIGNING		SIGNALIZATION		CONSTRUCTION ENGINEERING		STORM DRAIN		LANDSCAPE		UTILITY		PROJECT TOTALS	
			ESTIMATE	FINAL	ESTIMATE	FINAL	ESTIMATE	FINAL	ESTIMATE	FINAL	ESTIMATE	FINAL	ESTIMATE	FINAL	ESTIMATE	FINAL	ESTIMATE	FINAL	ESTIMATE	FINAL	ESTIMATE	FINAL
709020	RIGID ELECTRICAL CONDUIT 2" (DIA.)	LIN.FT.					4,200				17,450										21650	
709030	RIGID ELECTRICAL CONDUIT 3" (DIA.)	LIN.FT.					400				8,290										8690	
710000	ELECTRICAL PULL BOX (STANDARD)	EACH					6				17										23	
710010	ELECTRICAL PULL BOX (LARGE)	EACH									18										18	
710400	TRAFFIC SIGNAL MANHOLE	EACH									2										2	
711005	MULTI CONDUCTOR CABLE 5	LIN.FT.									5,455										5455	
711007	MULTI CONDUCTOR CABLE 7	LIN.FT.									905										905	
711020	MULTI CONDUCTOR CABLE 20	LIN.FT.									3,220										3220	
711102	SINGLE CONDUCTOR 2	LIN.FT.					10,000				1,350										11350	
711106	SINGLE CONDUCTOR 6	LIN.FT.									1,610										1610	
711108	SINGLE CONDUCTOR 8	LIN.FT.									3,375										3375	
711110	SINGLE CONDUCTOR 10	LIN.FT.									3,230										3230	
712031	3 SECTION TRAFFIC SIGNAL ASSEMBLY (LED)	EACH									25										25	
712041	4 SECTION TRAFFIC SIGNAL ASSEMBLY (LED)	EACH									8										8	
712051	5 SECTION TRAFFIC SIGNAL ASSEMBLY (LED)	EACH									6										6	
712201	PEDESTRIAN SIGNAL (LED)	EACH									16										16	
712330	3 SECTION BACKPLATE	EACH									17										17	
712340	4 SECTION BACKPLATE	EACH									1										1	
712350	5 SECTION BACKPLATE	EACH									2										2	
713020	PUSH BUTTON STATION	EACH									16										16	
713030	LOOP DETECTOR WIRE	LIN.FT.									13,750										13750	
713250	LOOP LEAD-IN CABLE	LIN.FT.									20,155										20155	
713300	DETECTOR SAW CUT	LIN.FT.									5,290										5290	
713430	PHASE SELECTOR MODULE	EACH									4										4	
713511	OPTICAL DETECTOR, 1 DIRECTION, 1 CHANNEL	EACH									8										8	
713600	OPTICAL DETECTOR CABLE	LIN.FT.									1,815										1815	
713805	VIDEO COAXIAL CABLE	LIN.FT.									430										430	
713806	VIDEO POWER CABLE	LIN.FT.									430										430	
713810	VIDEO CAMERA	EACH									2										2	
713812	PAN-TILT-ZOOM UNIT	EACH									2										2	
713900	ADVANCED TRAFFIC MANAGEMENT SYSTEM	L.S.									L.S.										L.S.	
714000	TRAFFIC ACTUATED CONTROLLER	EACH									2										2	
714001	TRAFFIC TECHNICIAN SIGNAL CABINET TRAINING COURSE	L.S.									L.S.										L.S.	
714280	8 PHASE DOUBLE RING CONTROLLER CABINET	EACH									2										2	
716040	ROADWAY LUMINAIRE TYPE 400 S	EACH					19				8										27	
716301	INTERNALLY ILLUMINATED SIGN	EACH									8										8	
720060	VEHICULAR IMPACT ATTENUATOR UNIT - WORK ZONES	EACH			12																12	
720110	REMOVE/ RESET IMPACT ATTENUATOR UNIT	EACH			18																18	
750000	INTELLIGENT TRANSPORTATION SYSTEM	L.S.									L.S.										L.S.	
750080	ITS MANHOLE (48" X 48" X 48")	EACH									20										20	
801000	CONSTRUCTION STAKING BY THE CONTRACTOR	L.S.											L.S.								L.S.	

JAMES H. BUCKMAN NEW MEXICO 13062 REGISTERED PROFESSIONAL ENGINEER 10/9/15

NO.	DESCRIPTION	DATE	BY
3			
2			
1			

REVISIONS (OR CHANGE NOTICES)

CITY OF SANTA FE

CERRILLOS ROAD PHASE IIC
CAMINO CARLOS REY TO
LLANO STREET
SANTA FE COUNTY

SUMMARY OF QUANTITIES
(CONTINUED)

SCALE
NOT TO SCALE

DESIGNED BY: PB	DRAWN BY: PB	CHECKED BY: JB
DATE: 08/07/15	DATE: 08/07/15	DATE: 08/07/15

GENERAL NOTES

PARSONS BRINCKERHOFF

CITY OF SANTA FE	SHEET
NEW MEXICO PROJECT NO.	NO.
CN S100130	1–7

STANDARD SPECIFICATIONS
1. THE NEW MEXICO STATE DEPARTMENT OF TRANSPORTATION STANDARD SPECIFICATIONS FOR HIGHWAY AND BRIDGE CONSTRUCTION, 2014 EDITION, SHALL GOVERN CONSTRUCTION OF THIS PROJECT.

NMDOT STANDARD DRAWINGS AND SPECIFICATIONS
2. NMDOT STANDARD DRAWINGS AND SPECIFICATIONS MAY BE FOUND ON THE NMDOT'S WEBSITE AT THE FOLLOWING WEB ADDRESS: http://www.dot.state.nm.us/en/Standards.html

MAINTENANCE OF AS–BUILT PLANS
3. THE CONTRACTOR SHALL MAINTAIN AN UP–TO–DATE SET OF AS–BUILT PLANS FOR THE PROJECT. THESE PLANS SHALL BE KEPT CURRENT, WITHIN TWO WEEKS, AT ALL TIMES, AND SHALL BE SUBJECT TO REVIEW BY THE PROJECT MANAGER THROUGHOUT THE PROJECT. THE PROJECT MANAGER SHALL REVIEW THE PLANS FOR ACCURACY AND COMPLETENESS AT LEAST ONCE EVERY 30 DAYS. TWO SETS OF THE FINAL AS–BUILT PLANS (ONE FOR THE CITY OF SANTA FE AND ONE FOR THE NMDOT) SHALL BE SUBMITTED TO THE PROJECT MANAGER PRIOR TO FINAL PAYMENT. THIS SHALL BE INCIDENTAL TO THE COST OF CONSTRUCTION.

FIELD VERIFICATION OF DIMENSIONS
4. THE CONTRACTOR SHALL FIELD VERIFY ALL ELEVATIONS, DIMENSIONS, AND RIGHT–OF–WAY PRIOR TO THE BEGINNING OF CONSTRUCTION. THE ELEVATIONS WERE BASED ON AS–BUILT AND FIELD SURVEY DATA. RIGHT–OF–WAY MAPS ARE AVAILABLE FROM THE CITY OF SANTA FE. THE CONTRACTOR SHALL LIMIT ALL WORK ON THIS PROJECT TO WITHIN THE EXISTING HIGHWAY RIGHT–OF–WAY, PUBLIC EASEMENTS, OR TEMPORARY WORK PERMIT AREAS. PAYMENT FOR THIS WORK SHALL BE INCLUDED IN THE CONTRACT PRICE FOR ITEM 801000 – "CONSTRUCTION STAKING BY THE CONTRACTOR."

EXCAVATION/STREET CUT PERMITS
5. THE CONTRACTOR SHALL OBTAIN AN EXCAVATION/STREET CUT PERMIT FROM THE CITY OF SANTA FE PRIOR TO CONSTRUCTION. THE CONTRACTOR SHALL BE RESPONSIBLE FOR ALL FEES ASSOCIATED WITH THESE PERMITS WHICH SHALL BE CONSIDERED INCIDENTAL TO THE COMPLETION OF THE PROJECT AND NO SEPARATE MEASUREMENT OR PAYMENT WILL BE MADE THEREFOR. PERMITS MAY BE OBTAINED BY THE CITY OF SANTA FE STREETS AND DRAINAGE SECTION, 1142 SILER ROAD (505) 955–3000.

DISPOSAL OF MATERIAL
6. THE CONTRACTOR SHALL PROPERLY HANDLE AND DISPOSE OF MATERIAL (I.E. ASPHALT, CONCRETE, VEGETATION, UNSTABLE EARTH, METAL, AND OTHER DEBRIS) REMOVED ON THE PROJECT BY HAULING IT TO AN APPROVED LANDFILL IN ACCORDANCE WITH REGULATIONS OF THE NEW MEXICO SOLID WASTE ACT. THE CONTRACTOR SHALL BE RESPONSIBLE FOR ALL HAULING AND DUMPING FEES, WHICH SHALL BE INCIDENTAL TO CONSTRUCTION.

ESTIMATED QUANTITIES
7. ALL QUANTITY SCHEDULES IN THE PLANS ARE FOR ESTIMATING PURPOSES ONLY. MEASUREMENT AND PAYMENT OF QUANTITIES SHALL BE DONE IN ACCORDANCE WITH SECTION 109 "MEASUREMENT AND PAYMENT" OF THE NMDOT STANDARD SPECIFICATIONS FOR HIGHWAY AND BRIDGE CONSTRUCTION, 2014 EDITION.

SHRINKAGE FACTOR
8. EARTHWORK VOLUMES SHALL BE BASED ON FINAL COMPACTED IN–PLACE VOLUME. NO SHRINKAGE QUANTITY SHALL BE MEASURED OR PAID.

"R" VALUE
9. THE DESIGN "R" VALUE FOR THIS PROJECT IS 16. MATERIAL WITH AN "R" VALUE LESS THAN THE DESIGN "R" VALUE SHALL NOT BE PLACED IN OR BE ALLOWED TO REMAIN WITHIN THE TOP TWO FEET OF THE FINISHED SUBGRADE. THIS SHALL INCLUDE DETOUR SUBGRADES. REMOVAL OF UNSUITABLE MATERIAL SHALL BE PAID FOR AS ITEM 203200 – SUBEXCAVATION.

EARTHWORK HAUL
10. THE EARTHWORK HAUL ON THIS PROJECT WILL BE CONSIDERED AS INCLUDED IN THE CONTRACT PRICE FOR ITEM 203000, UNCLASSIFIED EXCAVATION, AS APPLICABLE, AND NO SEPARATE MEASUREMENT OR PAYMENT WILL BE MADE THEREFOR.

PAVEMENT DROP–OFF GUIDELINES
11. IF A PAVEMENT DROP–OFF IS CREATED DURING CONSTRUCTION, THE CONTRACTOR SHALL INITIATE PROTECTIVE ACTION IN ACCORDANCE WITH THE NEW MEXICO DEPARTMENT OF TRANSPORTATION'S CURRENT "DROP–OFF GUIDELINES." REFER TO ADMINISTRATIVE DIRECTIVE AD–241 (8/1/2010) WHICH CAN BE FOUND AT THE FOLLOWING WEBSITE ADDRESS: http://www.dot.state.nm.us/en/Construction.html. THIS WORK SHALL BE CONSIDERED INCIDENTAL TO THE COMPLETION OF THE PROJECT AND NO SEPARATE MEASUREMENT OR PAYMENT WILL BE MADE THEREFOR.

WARPING OF SLOPES
12. THE CONTRACTOR SHALL WARP SLOPES, PER PLAN DETAILS, WHERE NECESSARY TO STAY WITHIN THE RIGHT–OF–WAY OR CONSTRUCTION EASEMENT LIMITS.

MATERIAL PITS
13. NO MATERIAL PITS HAVE BEEN DESIGNATED FOR THIS PROJECT. THE CONTRACTOR MAY OBTAIN SPECIFICATION BORROW OR SURFACING MATERIAL FROM ANY ACCEPTABLE SOURCE. ALL MATERIAL PIT ACTION SHALL BE GOVERNED BY SECTION 106 OF THE STANDARD SPECIFICATIONS.

CONSTRUCTION EQUIPMENT AND MATERIAL STORAGE
14. THE CONTRACTOR SHALL NOT STORE EQUIPMENT OR MATERIAL WITHIN 20 FEET OF THE EDGE OF THE DRIVING LANE UNLESS THE EQUIPMENT OR MATERIAL IS PROPERLY SHIELDED USING CURRENT SAFETY DESIGN AND INSTALLATION METHODS. THE SAFETY DESIGN FOR SHIELDING SHALL BE PROVIDED BY THE CONTRACTOR AND MUST BE APPROVED BY THE PROJECT MANAGER BEFORE IMPLEMENTING. THIS WORK, INCLUDING DESIGN, INSTALLATION, AND REMOVAL OF THE SHIELDING, SHALL BE CONSIDERED INCIDENTAL TO THE COMPLETION OF THE PROJECT AND NO SEPARATE MEASUREMENT OR PAYMENT WILL BE MADE THEREFOR.

ROW PLANS/MONUMENTATION INFORMATION
15. INFORMATION PERTAINING TO THE RIGHT–OF–WAY PLANS FOR THIS PROJECT MAY BE OBTAINED FROM THE PROJECT MANAGER.

PRESERVATION/RESTORATION OF SURVEY MONUMENTS
16. THE CONTRACTOR SHALL TAKE PRECAUTIONS TO PROTECT HORIZONTAL AND VERTICAL CONTROL SURVEY MONUMENTS (MARK) FROM DAMAGE PRIOR TO INITIATING CONSTRUCTION. AN INVENTORY OF THE EXISTING MONUMENTS WILL BE TAKEN BY THE PROJECT MANAGER AND THE CONTRACTOR WITH ACKNOWLEDGMENTS PRIOR TO START OF CONSTRUCTION. IF, DURING THE COURSE OF CONSTRUCTION OPERATIONS, THE CONTRACTOR DISTURBS OR DESTROYS A MARK, THE CONTRACTOR SHALL ESTABLISH A NEW MARK IN COMPLIANCE WITH THE STANDARDS AND PROCEDURES SET FORTH IN THE "GEODETIC MARK PRESERVATION GUIDEBOOK," NATIONAL GEODETIC SURVEY, MARCH 1990. CONTACT: NGS MARK PRESERVATION CENTER–NOAA, TELEPHONE (505) 768–3066. NO PAYMENT WILL BE MADE TO RE–ESTABLISH THE MARKER.

REMOVALS
17. THE CONTRACTOR SHALL BE RESPONSIBLE FOR ALL REMOVALS REQUIRED TO COMPLETE THIS PROJECT. ADDITIONAL REMOVALS NOT SHOWN ON THE PLANS WILL BE DESIGNATED BY THE PROJECT MANAGER. THIS WORK WILL BE CONSIDERED AS INCLUDED IN THE CONTRACT PRICE FOR ITEM 601000, REMOVAL OF STRUCTURES AND OBSTRUCTIONS.

SALVAGEABLE MATERIALS
18. SALVAGEABLE MATERIALS FROM THIS PROJECT ARE TO BE HAULED AND STOCKPILED AS FOLLOWS: SIGNAL EQUIPMENT, SIGNS AND OTHER ITEMS AS DETERMINED BY THE PROJECT MANAGER AND IN COORDINATION WITH THE CITY ENGINEER SHALL BE HAULED TO THE CITY OF SANTA FE MAINTENANCE YARD AT 1142 SILER ROAD. ALL SIGNAL EQUIPMENT SHALL BE PHOTOGRAPHED BY THE CONTRACTOR PRIOR TO TAKING DOWN AND AFTER DELIVERING TO THE CITY OF SANTA FE TO ENSURE THE CONDITION OF THE EQUIPMENT. PAYMENT FOR THIS WORK SHALL BE INCLUDED IN THE CONTRACT PRICE FOR ITEM 601000, REMOVAL OF STRUCTURES AND OBSTRUCTIONS.

CONTRACTOR COORDINATION WITH UTILITIES
19. THE CONTRACTOR IS HEREBY ADVISED THAT UTILITY RELOCATION WORK BY UTILITY OWNERS IS TO BE DONE DURING THE RAMP–UP PERIOD AND CONCURRENTLY WITH CONSTRUCTION. THE CONTRACTOR SHALL PROVIDE FOR UTILITY WORK IN CONJUNCTION WITH CONSTRUCTION OPERATIONS AND SHALL COORDINATE SCHEDULING OF WORK WITH THE RESPECTIVE UTILITY OWNERS IN ORDER TO AVOID DELAYS DUE TO UTILITY WORK. COORDINATION IS INCIDENTAL TO THE PROJECT.

20. THE CONTRACTOR WILL NOT RECEIVE ADDITIONAL COMPENSATION OR TIME EXTENSION FOR DELAYS OR INCONVENIENCES OR DAMAGES SUSTAINED DUE TO ANY INTERFERENCES FROM SAID UTILITY APPURTENANCES OR THE OPERATION OF MOVING THEM RESULTING FROM CONTRACTOR'S NEGLIGENCE.

UTILITY DISCLAIMER
21. UTILITY LOCATIONS SHOWN HEREON ARE BASED ON THE BEST AVAILABLE EVIDENCE INCLUDING PHYSICAL FEATURES SUCH AS VALVES, PEDESTALS, WARNING MARKERS, AND SPOTS BY UTILITY LOCATING SERVICES. THE SURVEYOR MAKES NO GUARANTEE AS TO THE COMPLETENESS OR ACCURACY OF THE UTILITY DATA SHOWN. CONTRACTOR SHALL VERIFY THE EXISTENCE AND LOCATION OF ALL UTILITIES PRIOR TO BEGINNING CONSTRUCTION ACTIVITIES.

CLEANING OF THE EXISTING STRUCTURES
22. THE CONTRACTOR SHALL CLEAN ALL EXISTING STRUCTURES THAT ARE TO REMAIN OPERATIONAL PRIOR TO INITIATING STRUCTURE EXTENSION WORK. STRUCTURES SHALL BE CLEAN AT THE TIME OF FINAL PROJECT ACCEPTANCE. THIS WORK WILL BE CONSIDERED AS INCIDENTAL TO THE COMPLETION OF THE PROJECT AND NO SEPARATE MEASUREMENT OR PAYMENT WILL BE MADE THEREFOR.

PAVEMENT ABUTMENT
23. WHEN ABUTTING NEW PAVEMENT TO EXISTING, SAW–CUT EXISTING PAVEMENT TO A NEAT VERTICAL CUT, OR AS APPROVED BY THE PROJECT MANAGER. THE COST OF SAW–CUTTING SHALL BE INCIDENTAL TO THE PAVEMENT, AND NO SEPARATE MEASUREMENT OR PAYMENT WILL BE MADE THEREFOR.

CONSTRUCTION WATER
24. THE CITY OF SANTA FE MAY PROHIBIT THE USE OF POTABLE WATER (FROM FIRE HYDRANTS) FOR CONSTRUCTION PURPOSES AND THE CONTRACTOR MAY BE REQUIRED TO USE RECLAIMED OR EFFLUENT WATER. THE CONTRACTOR SHOULD CONTACT THE CITY'S WASTEWATER DIVISION AT 955–4650 FOR MORE INFORMATION AND PRICING REGARDING THE AVAILABILITY, USE, AND PRICING OF THE FIRE HYDRANT WATER METERING. IT WILL BE THE CONTRACTOR'S RESPONSIBILITY TO SECURE AND SUPPLY WATER FOR THE PROJECT. THE COST WILL BE INCIDENTAL TO COMPLETION OF THE PROJECT AND NO SEPARATE PAYMENT WILL BE MADE THEREFOR.

NO.	DESCRIPTION	DATE	BY
3			
2			
1			

REVISIONS (OR CHANGE NOTICES)

JAMES H. BUCKMAN NEW MEXICO 13062 REGISTERED PROFESSIONAL ENGINEER 10/9/15

CITY OF SANTA FE

CERRILLOS ROAD PHASE IIC
CAMINO CARLOS REY TO
LLANO STREET
SANTA FE COUNTY

GENERAL NOTES

DESIGNED BY: PB	DRAWN BY: PB	CHECKED BY: JB
DATE: 08/07/15	DATE: 08/07/15	DATE: 08/07/15

GENERAL NOTES (CONTINUED)

PARSONS BRINCKERHOFF

CITY OF SANTA FE	SHEET
NEW MEXICO PROJECT NO.	NO.
CN S100130	1-8

CONSTRUCTION TRAFFIC CONTROL
25. GENERAL NOTES RELATED TO CONSTRUCTION TRAFFIC CONTROL ARE SHOWN IN SECTION 6.

LIGHTING
26. GENERAL NOTES AND INCIDENTAL ITEMS RELATED TO ROADWAY LIGHTING ARE SHOWN ON SHEET 8-1.

TRAFFIC SIGNALS
27. GENERAL NOTES AND INCIDENTAL ITEMS RELATED TO TRAFFIC SIGNAL INSTALLATION ARE SHOWN ON SHEET 9-1.

CONSTRUCTION SEQUENCE
28. THE SEQUENCE OF CONSTRUCTION SHOWN MAY BE REVISED BY THE CONTRACTOR UPON WRITTEN APPROVAL OF THE CITY OF SANTA FE PUBLIC WORKS DEPARTMENT.

CONTRACTOR WEEKLY WORK SCHEDULE
29. THE CONTRACTOR SHALL SUBMIT FOR THE CITY PROJECT MANAGER'S APPROVAL, A WEEKLY WORK SCHEDULE INCLUDING THE DAYS AND HOURS TO BE WORKED AT THE PRECONSTRUCTION MEETING. IF DURING THE COURSE OF CONSTRUCTION, THE CONTRACTOR DETERMINES A CHANGE TO THE REGULAR WORK SCHEDULE IS NECESSARY, THE CONTRACTOR SHALL SUBMIT A REVISED WORK SCHEDULE TO THE CITY PROJECT MANAGER FOR APROVAL AT LEAST ONE WEEK IN ADVANCE OF THE WORK WEEK TO ALLOW THE CITY SUFFICIENT TIME TO SCHEDULE INSPECTION PERSONNEL.

CEMENT TREATED SLURRY (STORM DRAIN)
30. THE CONTRACTOR SHALL USE PEA GRAVEL OR CEMENT TREATED SLURRY (FLOWABLE FILL) TO ABOVE THE TOP OF PIPE ELEVATION AT A MINIMUM IN LIEU OF BACKFILL FOR MAIN STORM DRAIN AND SHALL NOT ENCASE NEARBY UTILITY SERVICE LINES. CONCRETE SLURRY FILL OR FLOWABLE FILL SHALL NOT BE PLACED WITHIN 4' OF ANY SANITARY SEWER LINE. THE MATERIAL AND WORK WILL BE CONSIDERED AS INCIDENTAL TO THE STORM DRAIN PIPE ITEM AND NO SEPARATE MEASUREMENT OR PAYMENT WILL BE MADE THEREFOR. THE FLOWABLE FILL CONSTRUCTION SHALL BE IN ACCORDANCE TO SECTION 516 OF THE STANDARD SPECIFICATIONS. PEA GRAVEL BACKFILL SHALL BE IN ACCORDANCE WITH SUPPLEMENTAL SPECIFICATION 206.2.4 – PEA GRAVEL.

THE CONTRACTOR HAS THE OPTION TO USE PEA GRAVEL OR CEMENT TREATED SLURRY (FLOWABLE FILL) IN LIEU OF BACKFILL FOR STORM DRAIN LATERALS. THE MATERIAL AND WORK WILL BE CONSIDERED AS INCIDENTAL TO THE COMPLETION OF THE PROJECT AND NO SEPARATE MEASUREMENT OR PAYMENT WILL BE MADE THEREFOR. THE FLOWABLE FILL CONSTRUCTION SHALL BE IN ACCORDANCE TO SECTION 516 OF THE STANDARD SPECIFICATIONS. PEA GRAVEL BACKFILL SHALL BE IN ACCORDANCE WITH SUPPLEMENTAL SPECIFICATION 206.2.4 – PEA GRAVEL.

TRENCH BOX
31. THE CONTRACTOR SHALL USE A TRENCH BOX DURING THE INSTALLATION OPERATION OF THE STORM DRAIN. THE EQUIPMENT, MATERIAL AND WORK FOR THIS ACTIVITY WILL BE CONSIDERED AS INCIDENTAL TO THE ITEM NUMBER FOR STORM DRAIN AND NO SEPARATE MEASUREMENT OR PAYMENT WILL BE MADE THEREFOR.

WATER
32. ANY TEMPORARY SHUT-OFF OF WATER SERVICE SHALL FIRST BE COORDINATED WITH THE AFFECTED CUSTOMER, CITY OF SANTA FE WATER DEPARTMENT AND THE PROJECT MANAGER AT LEAST 48 HOURS PRIOR TO ANY DISRUPTION OF SERVICE. THE CONTRACTOR IS RESPONSIBLE FOR MAINTAINING CONTINUOUS WATER SERVICE.

CENTURYLINK FIBER OPTIC LINE
33. THE CONTRACTOR SHALL NOTIFY CENTURYLINK 72 HOURS IN ADVANCE OF ANY EXCAVATION WORK IN THE AREA OF THE FIBER OPTIC LINE. THE CONTRACTOR SHALL COORDINATE WITH CENTURYLINK DURING EXCAVATION EFFORTS, SO CENTURYLINK CAN PROVIDE THE LABOR AND MATERIAL TO PROPERLY SUPPORT THE FIBER OPTIC LINE BEFORE SOIL IS REMOVED FROM UNDER THE LINE. COORDINATION WORK SHALL BE INCIDENTAL TO THE PROJECT.

MANHOLE PROTECTION
34. THE CONTRACTOR SHALL KEEP THE COMMUNICATION (CENTURYLINK) MANHOLES COVERED AT ALL TIMES. THE CONTRACTOR SHALL PREVENT SOIL OR DEBRIS FROM ENTERING THE MANHOLES AT ALL TIMES. IF THE MANHOLE LIDS OR RINGS NEED TO BE REMOVED, THEY SHALL BE SALVAGED AND DELIVERED TO CENTURYLINK. MAINTAINING THE COVERED MANHOLES SHALL BE INCIDENTAL TO THE PROJECT.

DRAINAGE
35. LENGTHS AND SLOPES SHOWN FOR STORM DRAIN TRUNKLINES ARE BASED ON DISTANCE FROM CENTER OF JUNCTION TO CENTER OF JUNCTION. SLOPES AND LENGTHS FOR STORM DRAIN LATERALS ARE BASED ON DISTANCE FROM CENTER OF JUNCTION TO INSIDE WALL OF DROP INLET.

36. OFFSETS FOR DROP INLETS ARE MEASURED TO THE FLOWLINE OF CURB AND GUTTER. TOP OF GRATE ELEVATIONS FOR DROP INLETS ARE GIVEN AT THE GUTTER FLOWLINE.

37. OFFSETS FOR MANHOLES ARE MEASURED TO THE CENTER OF THE MANHOLE. RIM ELEVATIONS FOR MANHOLES ARE GIVEN AT THE CENTER OF THE MANHOLE.

38. CONTRACTOR SHALL SANDBAG OR PLACE TEMPORARY CAPS ON ALL DROP INLET LATERALS UNTIL TRUNKLINE IS CONSTRUCTED TO ENSURE THAT WATER DOES NOT ENTER THE STORM DRAIN UNTIL THE SYSTEM IS FUNCTIONAL.

39. WHEN ABANDONING EXISTING DROP INLETS, CONTRACTOR SHALL REMOVE TO AT LEAST 2' BELOW PROPOSED PROFILE GRADE. THE CONNECTING LATERAL SHALL BE CUT AND CAPPED PER NMDOT SERIAL DRAWING 515-01. THE INLET OR MANHOLE, LATERAL AND ADJACENT VOID AREAS SHALL BE BACKFILLED WITH CLEAN SAND TO THE PROPOSED SUBGRADE ELEVATION. PAYMENT FOR THIS WORK SHALL BE INCIDENTAL TO ITEM 601000 REMOVAL OF STRUCTURES AND OBSTRUCTIONS.

40. CONTRACTOR SHALL SUBMIT A SHORING PLAN FOR SUPPORT OF UTILITIES AND CROSSING STRUCTURES IN THE OPEN STORM DRAIN TRENCH FOR APPROVAL BY THE PROJECT MANAGER.

41. UNLESS NOTED ON PLANS, CONTRACTOR SHALL BUILD CURB DROP INLETS (CDIS) AND MODIFIED CURB DROP INLETS PER SPECIAL DETAILS ON SHEET 2-16 TO 2-17. CONTRACTOR SHALL BUILD MANHOLES (MHS) PER SPECIAL DETAILS ON SHEETS 2-18 TO 2-21.

42. THE MODIFIED TYPE "B" INLET SHALL INCLUDE ALL APPURTENANCES INCLUDING THE "SNOUT" OIL AND DEBRIS STOP.

WEEKLY PROJECT MEETINGS
43. THE CONTRACTOR SHALL COORDINATE AND CONDUCT A WEEKLY PROJECT MEETING DURING CONSTRUCTION, IN COORDINATION WITH THE PROJECT MANAGER. THE CONTRACTOR SHALL COORDINATE WITH THE PROJECT MANAGER TO DETERMINE THE MEETING LOCATION AND SCHEDULE. THE CONTRACTOR SHALL INVITE APPROPRIATE CITY STAFF, FHWA & NMDOT STAFF (IF NECESSARY), UTILITY COMPANY REPRESENTATIVES AND THE SANTA FE CHAMBER OF COMMERCE. THE COST ASSOCIATED WITH THESE WEEKLY MEETINGS SHALL BE CONSIDERED INCIDENTAL TO CONSTRUCTION AND NO FURTHER MEASUREMENT OR PAYMENT WILL BE MADE THEREFOR.

ADA COMPLIANCE
44. THE CONTRACTOR SHALL ENSURE ADA COMPLIANCE OF ADA FEATURES AND APPURTENANCES (INCLUDING, BUT NOT LIMITED TO, SIDEWALK & CURB RAMP CROSS SLOPES, RAMP SLOPES, LEVEL LANDINGS, SIGNAL PUSHBUTTON LOCATIONS, ETC.) AS DETAILED IN THE PLANS AND IN ACCORDANCE WITH THE PUBLIC RIGHT OF WAY PEDESTRIAN ACCESSIBILITY GUIDELINES (PROWAG). THE CONTRACTOR IS RESPONSIBLE FOR FIELD CHECKING SLOPES AND DIMENSIONS OF ALL FORM WORK FOR COMPLIANCE PRIOR TO INSTALLATION OF CONCRETE. THE CITY RESERVES THE RIGHT TO INSPECT ANY ADA FEATURES AND APPURTENANCES AT ANY TIME BEFORE FINAL COMPLETION OF THE PROJECT AND TO HAVE THE CONTRACTOR REMOVE, REPLACE, AND/OR CORRECT AT HIS COST ANY WORK THAT IS NOT IN COMPLIANCE, AS DETERMINED BY THE PROJECT MANAGER.

HANDLING OF MATERIAL
45. THE CONTRACTOR MAY BE REQUIRED TO DOUBLE HANDLE MATERIAL NEEDED FOR THE INSTALLATION OF THE STORM DRAIN PIPE. THE COST ASSOCIATED TO DOUBLE HANDLE SUCH MATERIAL SHALL BE CONSIDERED INCIDENTAL TO THE ITEM NUMBER FOR THE STORM DRAIN AND NO FURTHER MEASUREMENT OR PAYMENT WILL BE MADE THEREFOR.

JAMES H. BUCKMAN NEW MEXICO 13062 REGISTERED PROFESSIONAL ENGINEER 10/27/15

NO.	DESCRIPTION	DATE	BY
3			
2			
1			

REVISIONS (OR CHANGE NOTICES)

CITY OF SANTA FE

CERRILLOS ROAD PHASE IIC
CAMINO CARLOS REY TO
LLANO STREET
SANTA FE COUNTY

GENERAL NOTES (CONTINUED)

SCALE

DESIGNED BY: PB	DRAWN BY: PB	CHECKED BY: JB
DATE: 08/07/15	DATE: 08/07/15	DATE: 08/07/15

GENERAL NOTES (CONTINUED)

PARSONS BRINCKERHOFF

CITY OF SANTA FE	SHEET
NEW MEXICO PROJECT NO.	NO.
CN S100130	1-9

NOISE ORDINANCE
46. CITY OF SANTA FE NOISE ORDINANCE SFCC S 10-2.4 B. (5) (a) PROHIBITS OPERATION OF EQUIPMENT USED IN CONSTRUCTION WORK ON STREETS IN RESIDENTAL OR COMMERCIALLY ZONED AREAS BETWEEN THE HOURS OF 9:00 P.M. AND 7:00 A.M. THE FOLLOWING DAY, UNLESS AN EXEMPTION IS OBTAINED. REFER TO THE NOTICE TO CONTRACTORS FOR INFORMATION.

CONSTRUCTION YARD
47. THE CONTRACTOR SHALL PROVIDE AT THE CONTRACTOR'S OWN EXPENSE AND WITHOUT LIABILITY TO THE OWNER ANY ADDITIONAL LAND AND ACCESS THERETO THAT THE CONTRACTOR MAY DESIRE FOR A TEMPORARY STAGING AREA OR YARD FOR STORAGE OF EQUIPMENT AND MATERIALS. NPDES SWPPP MEASURES AND INSPECTIONS TO ANY SUCH AREA OR YARD UTILIZED FOR PURPOSES OF THE PROJECT MAY APPLY.

EXISTING UTILITY SURVEY
48. PRIOR TO CONSTRUCTION, THE CONTRACTOR SHALL SURVEY THE LOCATION OF ALL EXISTING UTILITY APPURTENANCES IN THE EXISTING ROADWAY WITHIN THE PROJECT LIMITS (INCLUDING MANHOLES, METERS, AND WATER VALVES), THE CONTRACTOR SHALL PROVIDE THE PROJECT MANAGER A LISTING OF THE EXISTING UTILITY ITEMS INCLUDING A DESCRIPTION AND STATION/OFFSET. THIS WORK SHALL BE INCLUDED IN THE COST FOR ITEM 663049 - "PRECONSTRUCTION UTILITY SURVEY", AND NO SEPARATE MEASUREMENT OR PAYMENT WILL BE MADE THEREFOR.

HIGH-EARLY STRENGTH CONCRETE MIX DESIGN
49. FOR CONCRETE UTILIZED FOR DRIVEPAD AND VALLEY GUTTER CONSTRUCTION INCLUDING ADJOINING FILLETS AND SIDEWALK TRAVERSED BY VEHICULAR TRAFFIC (SEE SHEET 2-14), THE CONTRACTOR SHALL UTILIZE A HIGH-EARLY STRENGTH CONCRETE MIX DESIGN THAT WILL ACHIEVE APPROPRIATE STRENGTH FOR VEHICLE USE WITHIN A 12 TO 24 HOUR PERIOD AFTER PLACEMENT.

A MIX DESIGN SHALL BE SUBMITTED TO THE PROJECT MANAGER FOR REVIEW AND APPROVAL PRIOR TO USE. STRUCTURAL PLATES OF ADEQUATE SIZE AND STRENGTH FOR TRAFFIC LOADS MAY BE UTILIZED IN LIEU OF A HIGH-EARLY MIX DESIGN AS APPROVED BY THE PROJECT MANAGER. THESE MEASURES SHALL BE INCIDENTAL TO CONSTRUCTION AND NO SEPARATE MEASUREMENT OR PAYMENT WILL BE MADE THEREFOR.

REMOVAL OF ENCROACHMENTS
50. AS REQUIRED, THE CONTRACTOR SHALL REMOVE THE FOLLOWING (SEE REMOVAL OF STRUCTURES AND OBSTRUCTIONS SCHEDULE, SECTION 2 FOR DETAILS):

- LIGHTPOLES (PARKING AREAS)
  1. STA: 141+79.50 LOCATION: 70.14' LT
  2. STA: 142+78.45 LOCATION: 76.79' LT
  3. STA: 142+96.27 LOCATION: 52.43' RT
  4. STA: 146+18.10 LOCATION: 63.39' RT
  5. STA: 147+83.90 LOCATION: 66.16' LT
  6. STA: 152+14.26 LOCATION: 68.24' LT
  7. STA: 161+22.00 LOCATION: 71.67' LT

- SIGNS
  8. STA: 145+68.13 LOCATION: 44.77' RT (CAMINO REAL HISTORIC SIGN)
  9. STA: 162+70.45 LOCATION: 71.18' RT (DIONS ENTRANCE ARROW)
  10. STA: 163+25.40 LOCATION: 71.62' RT (DIONS EXIT ARROW)

- FLAGPOLE
  11. STA: 143+07.42 LOCATION: 53.80' RT.

- PARKING FEATURES (PAVEMENT, CURB, PARKING BUMPERS, ETC.)
  12. AUTO ZONE
      2505 CERRILLOS RD.
      SANTA FE, NM 87505

  13. NM STATE PERSONNEL OFFICE
      2600 CERRILLOS RD.
      SANTA FE, NM 87505

  14. PIZZA 9
      1965 CERRILLOS RD.
      SANTA FE, NM 87507

THE CONTRACTOR SHALL PROVIDE AT LEAST TWO WEEKS NOTICE TO ADJACENT PROPERTY OWNERS PRIOR TO COMMENCING WORK. LIGHT POLES / SIGNS / FLAGPOLES SHALL BE STOCKPILED ON THE ADJACENT PRIVATE PROPERTY AND OUTSIDE THE RIGHT-OF-WAY, AT A LOCATION TO BE DETERMINED BY THE PROPERTY OWNER OR PROJECT MANAGER. FOUNDATIONS SHALL BE REMOVED BY THE CONTRACTOR. THIS WORK SHALL BE PAID FOR UNDER ITEM 601000 REMOVAL OF STRUCTURES AND OBSTRUCTIONS AND NO SEPARATE MEASUREMENT OR PAYMENT WILL BE MADE THEREFOR. THE CONTRACTOR IS ADVISED THAT PORTIONS OF THESE REMOVALS MAY BE COMPLETED BY PROPERTY OWNERS PRIOR TO CONSTRUCTION.

CONTRACTOR PREQUALIFICATION
13. THE CONTRACTOR SHALL BE PREQUALIFIED PER THE CONTRACT AND THE NMDOT STANDARD SPECIFICATIONS, IN ADDITION TO THE OTHER LICENSES AND APPROVALS REQUIRED BY THE PLANS.

UNSTABLE SUBGRADE STABILIZATION
52. UNSTABLE SUBGRADE STABILIZATION WILL BE PERFORMED PER SPECIAL PROVISION 203-C. THE CONTRACTOR HAS THE OPTION OF USING PULVERIZED ASPHALT OBTAINED FROM REMOVAL OF EXISTING SURFACING. GEOTEXTILES OR GEOGRID WILL NOT BE ALLOWED.

PRE-CONSTRUCTION STAKING AND COORDINATION
53. PNM WILL INSTALL NEW UTILITY POLES BEFORE THE START OF ROADWAY CONSTRUCTION. DURING THE RAMP-UP TIME AND PRIOR TO PNM BEGINNING CONSTRUCTION, THE CONTRACTOR SHALL PROVIDE SURVEY MARKS (PAINT, NAILS WITH WHISKERS, ETC.) SHOWING THE LOCATIONS OF EXISTING UTILITIES AND THE PROPOSED ROADWAY IMPROVEMENTS WITHIN 25' OF NEW POLES. THE CONTRACTOR SHALL MARK THE ROW AND PROPOSED CURB AND GUTTER, SIDEWALK, TRAFFIC SIGNALS, SIGNS, DRAINAGE INLETS, BUS STOPS, AND OTHER ITEMS AS DIRECTED BY THE PROJECT MANAGER. BASED ON THE FIELD MARKS AND THE NEW POLE LOCATIONS MARKED BY PNM, THE CONTRACTOR SHALL NOTIFY THE PROJECT MANAGER OF ANY POTENTIAL CONFLICTS WITH THE PROPOSED IMPROVEMENTS PRIOR TO ANY WORK. A MINIMUM CLEARANCE OF 4'-0" BETWEEN THE EDGE OF POLE AND EDGE OF SIDEWALK OR OTHER OBSTACLE MUST BE MAINTAINED PER PROWAG. IF CONFLICTS OR SUBSTANDARD CLEARANCES WILL EXIST, THE CONTRACTOR SHALL ATTEND A SITE MEETING WITH THE PROJECT MANAGER AND PNM TO RESOLVE THE ISSUES. THE COST OF THIS WORK SHALL BE INCLUDED IN ITEM NO. 663049, PRE-CONSTRUCTION UTILITY SURVEY, AND NO ADDITIONAL PAYMENT SHALL BE MADE.

INCIDENTAL ITEMS

1. MAINTENANCE OF AS-BUILTS: NOTE 3, SHEET 1-7
2. DISPOSAL OF MATERIAL: NOTE 6, SHEET 1-7
3. PAVEMENT DROP-OFF PROTECTION: NOTE 11. SHEET 1-7
4. CONSTRUCTION EQUIPMENT AND MATERIAL STORAGE: NOTE 14, SHEET 1-7
5. CONTRACTOR COORDINATION WITH UTILITIES: NOTE 19, SHEET 1-7
6. CLEANING OF EXISTING STRUCTURES: NOTE 22, SHEET 1-7
7. PAVEMENT ABUTMENT SAWCUT: NOTE 23, SHEET 1-7
8. CONSTRUCTION WATER: NOTE 24, SHEET 1-7
9. TRENCH BOX: NOTE 31, SHEET 1-8
10. FIBER OPTIC LINE SUPPORT: NOTE 33, SHEET 1-8
11. MANHOLE PROTECTION: NOTE 34, SHEET 1-8
12. WEEKLY PROJECT MEETINGS: NOTE 43, SHEET 1-8
13. HIGH EARLY-STRENGTH CONCRETE: NOTE 49, THIS SHEET
14. SIDEWALK CULVERTS
15. LAYDOWN CURB FOR CURB RAMPS
16. 4" WIDE HEADER CURB FOR CURB RAMPS
17. 54" RCP PLUG: SHEET 2-6

NOTE: SEE MISCELLANEOUS LIGHTING INCIDENTAL ITEMS, SHEET 8-1

NO.	DESCRIPTION	DATE	BY
3			
2			
1			

REVISIONS (OR CHANGE NOTICES)

JAMES H. BUCKMAN NEW MEXICO 13062 REGISTERED PROFESSIONAL ENGINEER

CITY OF SANTA FE

CERRILLOS ROAD PHASE IIC
CAMINO CARLOS REY TO
LLANO STREET
SANTA FE COUNTY

GENERAL NOTES (CONTINUED)

DESIGNED BY: PB	DRAWN BY: PB	CHECKED BY: JB
DATE: 08/07/15	DATE: 08/07/15	DATE: 08/07/15

J:\33693 Cerrillos Ph IIC\04 Engineering-33693\Plans\1_Sheets\1-9 GENNOTE3.dwg Oct 06, 2015 - 4:03pm Saved By: millernz

N.M. PROJECT NO. CN S100130 SHEET NO. 1-9

PARSONS BRINCKERHOFF

CITY OF SANTA FE	SHEET
NEW MEXICO PROJECT NO.	NO.
CN S100130	1-10

ENVIRONMENTAL COMMITMENTS

THE CONTRACTOR SHALL REFER TO SECTION 107 OF THE SPECIFICATIONS, MAKING SPECIAL NOTE OF SUB-SECTION 107.14: CONTRACTOR'S RESPONSIBILITIES FOR ENVIRONMENTAL AND CULTURAL RESOURCE PROTECTION.

☐ NO ADDITIONAL PROJECT-SPECIFIC ENVIRONMENTAL REQUIREMENTS APPLY

☒ IN ADDITION TO SECTION 107, THE FOLLOWING PROJECT-SPECIFIC ENVIRONMENTAL REQUIREMENTS APPLY. COMPLIANCE WITH THE FOLLOWING REQUIREMENTS SHALL BE INCIDENTAL TO CONSTRUCTION, AND NO SEPARATE MEASUREMENT OR PAYMENT WILL BE MADE THEREFOR:

1. THE CONTRACTOR SHALL PREPARE AND IMPLEMENT A STORM WATER POLLUTION PREVENTION PLAN (SWPPP) AND A TEMPORARY EROSION AND SEDIMENT CONTROL PLAN (TESCP) IN COMPLIANCE WITH SECTION 402 OF THE CLEAN WATER ACT. BEST MANAGEMENT PRACTICES (BMP'S) SHALL BE INSTALLED AND MAINTAINED BOTH DURING AND AFTER CONSTRUCTION TO PREVENT, TO THE EXTENT PRACTICABLE, POLLUTANTS IN STORM WATER RUNOFF FROM ENTERING WATERS OF THE U.S. TEMPORARILY DISTURBED AREAS WILL BE RE-VEGETATED AFTER CONSTRUCTION TO LIMIT EROSION POTENTIAL.

2. IF BURIED ARCHEOLOGICAL OR CULTURAL DEPOSITS ARE DISCOVERED DURING CONSTRUCTION, WORK IN THE AREA SHALL CEASE WHILE THE SHPO, THE NMDOT, AND THE CITY OF SANTA FE ARE CONSULTED.

3. ONLY LOW-VIBRATORY EQUIPMENT WILL BE USED WITHIN 50 FEET OF THE FOLLOWING BUILDINGS: LAMPLIGHTER INN (150+50-153+50), SILVER SADDLE MOTEL (STA. NO. 129+00-132+00), WILLIE ORTIZ BUILDING (STA. NO. 141+00-145+00), AND MOTOR TRANSPORTATION POLICE BUILDING (145+00-149+50).

4. THE CITY OF SANTA FE SHALL ENSURE THAT THE CONSTRUCTION CONTRACTOR SHALL RELOCATE THE OFFICIAL SCENIC HISTORIC MARKER AS PER SHEET 7-02.

R. Blake Roxlau 9-15-14

R. BLAKE ROXLAU, NMDOT ENVIRONMENTAL PROGRAM MANAGER — DATE

NO.	DESCRIPTION	DATE	BY
3			
2			
1			

REVISIONS (OR CHANGE NOTICES)

CITY OF SANTA FE

CERRILLOS ROAD PHASE IIC
CAMINO CARLOS REY TO
ST. MICHAELS DRIVE
SANTA FE COUNTY

ENVIRONMENTAL COMMITMENTS

SCALE
NOT TO SCALE

DESIGNED BY: PB	DRAWN BY: PB	CHECKED BY: JB
DATE: 07/07/14	DATE: 07/07/14	DATE: 07/07/14

J:\33693 Cerrillos Ph IIC\04 Engineering-33693\Plans\1_Sheets\1-10 Environmental_notes.dwg Sep 09, 2014 - 9:28am Saved By: herreraaj

N.M. PROJECT NO. CN S100130 SHEET NO. 1-10

PARSONS BRINCKERHOFF

CITY OF SANTA FE	SHEET
NEW MEXICO PROJECT NO.	NO.
CN S100130	2–1

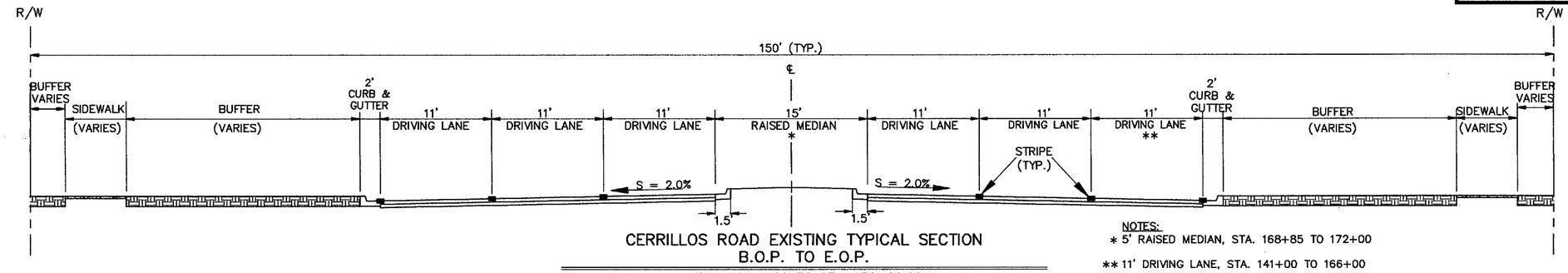

CERRILLOS ROAD EXISTING TYPICAL SECTION
B.O.P. TO E.O.P.
STA. 141+00.00 TO STA. 172+00.00

NOTES:
* 5' RAISED MEDIAN, STA. 168+85 TO 172+00
** 11' DRIVING LANE, STA. 141+00 TO 166+00

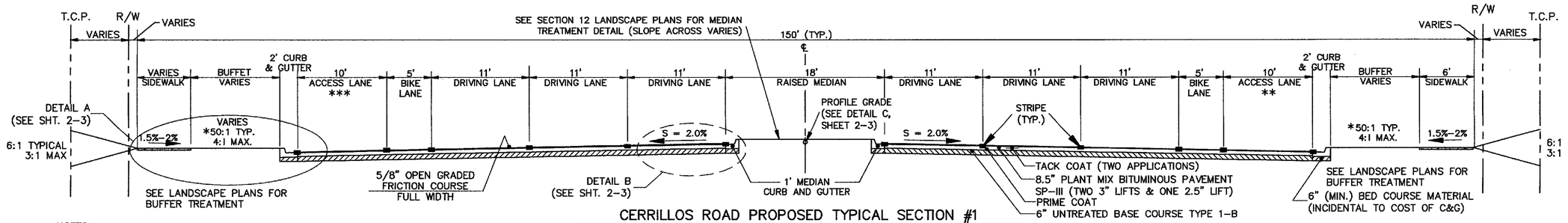

CERRILLOS ROAD PROPOSED TYPICAL SECTION #1
STA. 141+82.58 TO STA. 163+95.53 (RIGHT SIDE)
STA. 141+82.58 TO STA. 166+34.00 (LEFT SIDE)

NOTES:
* IN CASES WHERE SIDEWALK IS LOWER THAN THE PROPOSED CURB, SEE ALTERNATE SECTION 1 SHEET 2–3
** ACCESS LANE WIDTH VARIES FROM 10' TO 0' STA. 163+24.47 TO 163+95.53 (RIGHT SIDE)
*** ACCESS LANE WIDTH VARIES FROM 10' TO 0' STA. 165+34.00 TO 166+34.00 (LEFT SIDE)

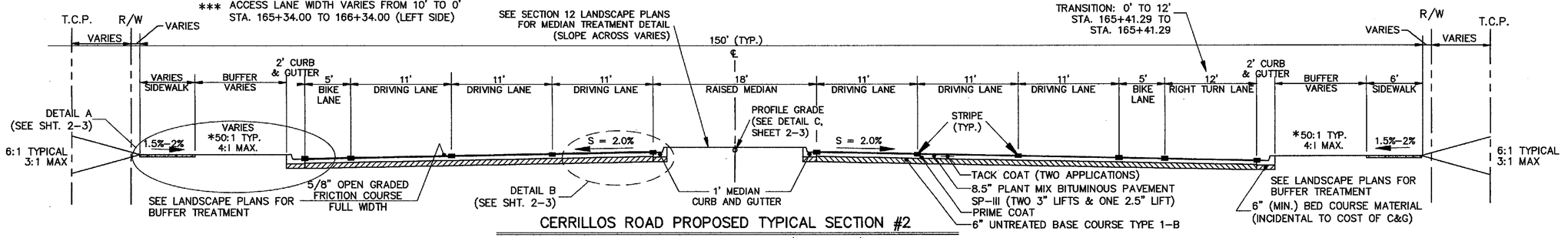

CERRILLOS ROAD PROPOSED TYPICAL SECTION #2
STA. 164+31.57 TO STA. 167+01.00 (RIGHT SIDE)
STA. 166+34.00 TO STA. 167+34.14 (LEFT SIDE)

EXISTING PAVEMENT SECTION DATA*

TEST HOLE	STATION	ASPHALTIC CONCRETE (INCHES)	AGGREGATE BASE COURSE (INCHES)	GRANULAR SUB BASE (INCHES)
17	143+50	6	6	24
18	150+10	10	6	2
19	157+70	10	2	0
20	164+15	9	3	0

* REFER TO DOCUMENT "PAVEMENT SECTION DESIGN, CERRILLOS ROAD, SANTA FE, NEW MEXICO" BY VINYARD & ASSOCIATES, INC. (NOVEMBER 3, 1999) AND DOCUMENT "REVISED PAVEMENT SECTION DESIGN, CERRILLOS ROAD" BY VINYARD & ASSOCIATES, INC. (APRIL 12, 2000) FOR MORE INFORMATION.

TRAFFIC DESIGN DATA

RICHARDS AVE. TO ST. MICHAELS DR.
DESIGN SPEED = 45 mph
AVERAGE DAILY TRAFFIC (2035) = 45,500
% HEAVY COMMERCIAL (2035) = 6.0%
2035 CUMULATIVE ESAL 7,075,302 (FLEXIBLE)

CERRILLOS ROAD DESIGN DATA
LENGTH OF PROJECT

ROADWAY	STATION to STATION	FEET	MILES
CERRILLOS	141+00.00 TO 172+00.00	3100	0.587

NOTES:
1. SEE SECTION 3 ROADWAY LAYOUT PLANS FOR SIDEWALK AND BUFFER LOCATIONS, DIMENSIONS AND ADDITIONAL INFORMATION.
2. SEE CERRILLOS ROAD PHASE IIC FINAL RIGHT–OF–WAY MAPS (NMP NO. S100130) DATED APRIL 4, 2014 FOR ADDITIONAL RIGHT–OF–WAY AND T.C.P. INFORMATION.
3. THE SIDE STREETS WILL NOT REQUIRE O.G.F.C. WITH THE EXCEPTION OF ST. MICHAEL'S DRIVE AND OSAGE AVENUE. SEE SURFACING SCHEDULE, SHEET 2–4 FOR ADDITIONAL INFORMATION.

JAMES H. BUCKMAN NEW MEXICO 13062 REGISTERED PROFESSIONAL ENGINEER 11/6/15

NO.	DESCRIPTION	DATE	BY
3			
2			
1			

REVISIONS (OR CHANGE NOTICES)

CITY OF SANTA FE

CERRILLOS ROAD PHASE IIC
CAMINO CARLOS REY TO
LLANO STREET
SANTA FE COUNTY

EXISTING TYPICAL SECTION/
PROPOSED TYPICAL SECTION

SCALE
NOT TO SCALE

DESIGNED BY: PB	DRAWN BY: PB	CHECKED BY: JB
DATE: 08/07/15	DATE: 08/07/15	DATE: 08/07/15

J:\33693 Cerrillos Ph IIC\04 Engineering–33693\Plans\2_Sheets\2–1 Typical Sections.dwg Oct 06, 2015 – 4:26pm Saved By: JimenezR

N.M. PROJECT NO. CN S100130 SHEET NO. 2–1

PARSONS BRINCKERHOFF

CITY OF SANTA FE	SHEET
NEW MEXICO PROJECT NO.	NO.
CN S100130	2–2

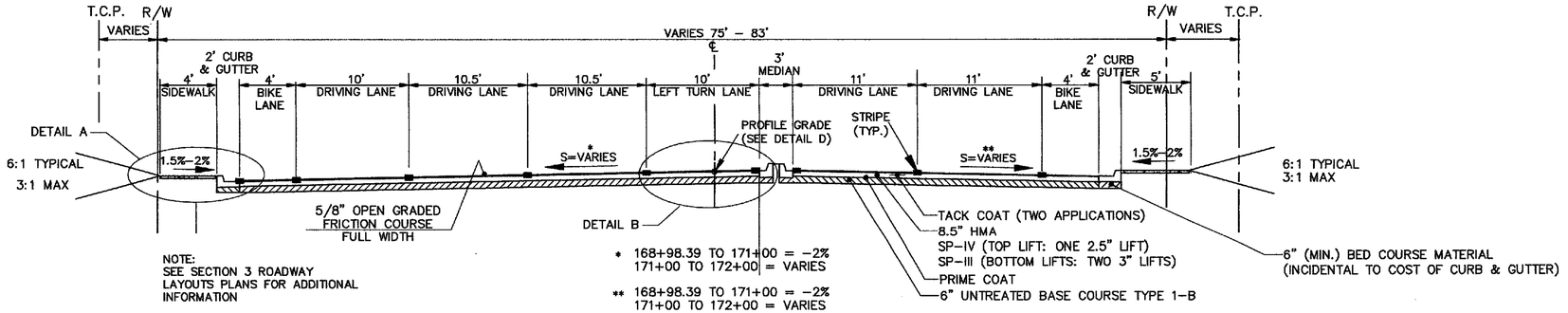

CERRILLOS ROAD PROPOSED TYPICAL SECTION #3

STA. 168+98.39 TO STA. 171+00.00
STA. 171+00.00 TO STA. 172+00.00 TRANSITION TO EXISTING

*NOTE:
1. IN CASES WHERE SIDEWALK IS LOWER THAN THE PROPOSED CURB, SEE ALTERNATE SECTION 1, SHEET 2–3.
2. REFER TO SECTION 12 LANDSCAPE PLANS FOR MEDIAN AND BUFFER TREATMENTS.

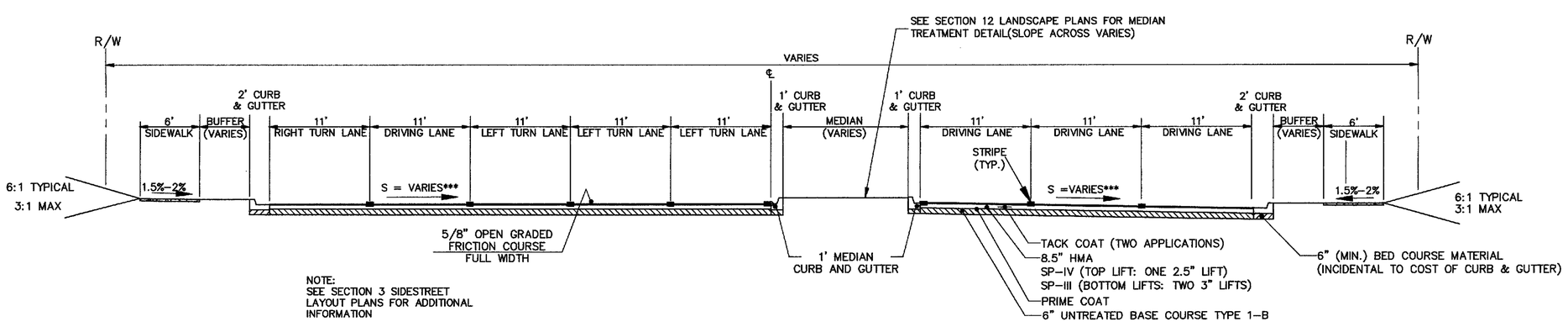

ST. MICHAEL'S DRIVE

STA. 10+94.10 TO STA. 13+71.75

*** SEE SECTION 3 SIDESTREET LAYOUT PLANS FOR CROSS SLOPES

NOTES:
1. SEE SECTION 3 ROADWAY LAYOUT PLANS FOR SIDEWALK AND BUFFER LOCATIONS, DIMENSIONS AND ADDITIONAL INFORMATION.
2. SEE CERRILLOS ROAD PHASE IIC FINAL RIGHT–OF–WAY MAPS (NMP NO. S100130) DATED APRIL 4, 2014 FOR ADDITIONAL RIGHT–OF–WAY AND T.C.P. INFORMATION.
3. THE SIDE STREETS WILL NOT REQUIRE O.G.F.C. WITH THE EXCEPTION OF ST. MICHAEL'S DRIVE AND OSAGE AVENUE. SEE SURFACING SCHEDULE, SHEET 2–4 FOR ADDITIONAL INFORMATION.

JAMES H. BUCKNER NEW MEXICO 13062 REGISTERED PROFESSIONAL ENGINEER 12/4/15

NO.	DESCRIPTION	DATE	BY
3			
2			
1			

REVISIONS (OR CHANGE NOTICES)

SCALE
NOT TO SCALE

DESIGNED BY: PB	DRAWN BY: PB	CHECKED BY: JB
DATE: 08/07/15	DATE: 08/07/15	DATE: 08/07/15

CITY OF SANTA FE

CERRILLOS ROAD PHASE IIC
CAMINO CARLOS REY TO
LLANO STREET
SANTA FE COUNTY

PROPOSED TYPICAL SECTIONS

PARSONS BRINCKERHOFF

CITY OF SANTA FE	SHEET
NEW MEXICO PROJECT NO.	NO.
CN S100130	2–3

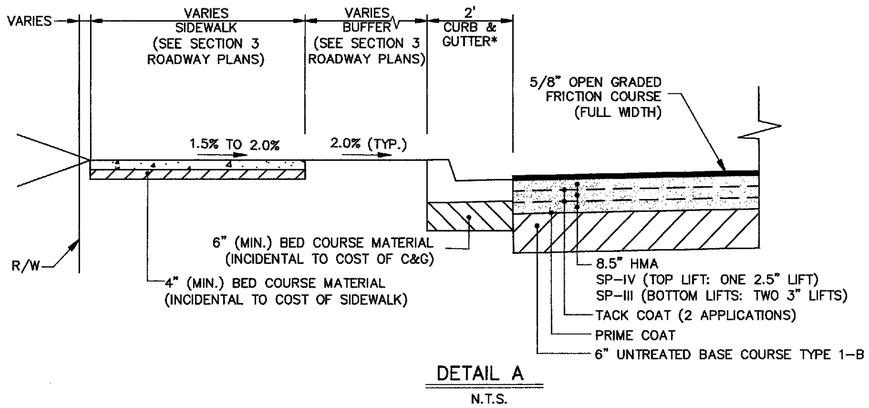

DETAIL A
N.T.S.

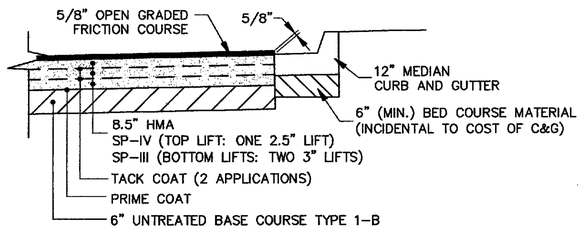

DETAIL B
N.T.S.

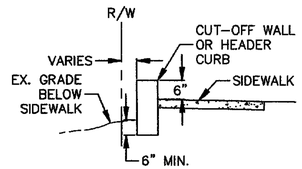

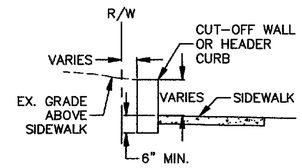

NOTES:
1. SEE SECTION 3 ROADWAY LAYOUT PLANS FOR LOCATIONS OF GRADE CONTROL CURBS
2. SEE SHEET 2–14 FOR HEADER CURB AND CUT–OFF WALL DETAILS.

HEADER CURB AND CUT–OFF WALL
@ BACK OF SIDEWALK AND ALONG R/W
N.T.S.

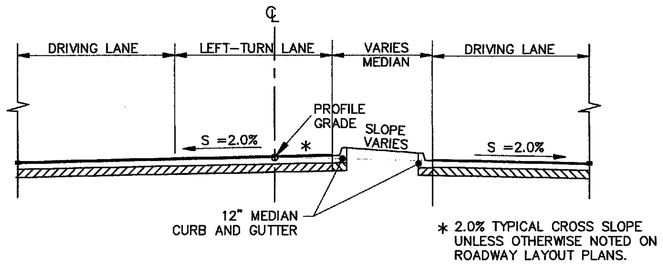

DETAIL D
TYP. SINGLE LEFT TURN LANE DETAIL
@ SIGNALIZED INTERSECTIONS
N.T.S.

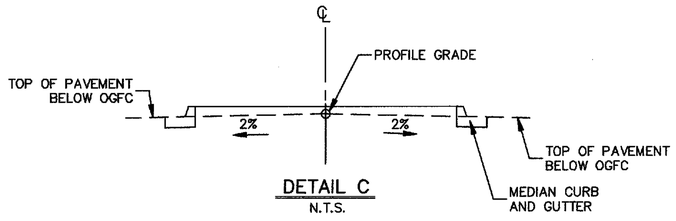

DETAIL C
N.T.S.

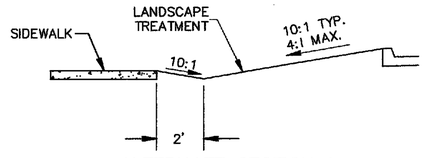

ALTERNATE SECTION 1
N.T.S.

STATION	OFFSET	TO	STATION	OFFSET	DESCRIPTION
137+20.74	2.00' RT.		140+46.83	2.00' RT	SINGLE LEFT TURN LANE (SB)
141+81.80	6.00' LT.		142+62.00	6.00' LT.	SINGLE LEFT TURN LANE (NB)
146+95.00	6.00' RT.		145+70.00	6.00' RT.	SINGLE LEFT TURN LANE (SB)
147+92.00	6.00' LT.		149+12.00	6.00' LT.	SINGLE LEFT TURN LANE (NB)
153+21.08	2.00' LT.		154+69.64	2.00' LT.	SINGLE LEFT TURN LANE (NB)
155+80.40	2.00' RT.		157+79.97	2.00' RT.	SINGLE LEFT TURN LANE (SB)
161+05.00	6.00' RT.		161+88.23	6.00' RT.	SINGLE LEFT TURN LANE (SB)
162+81.57	6.00' LT.		163+57.00	6.00' LT.	SINGLE LEFT TURN LANE (NB)
165+39.14	2.00' LT.		167+59.51	2.00' LT.	SINGLE LEFT TURN LANE (NB)
168+98.39	4.00' RT.		172+03.94	3.76' RT.	SINGLE LEFT TURN LANE (SB)

LEFT TURN LANE DATA

NOTES: LEFT TURN LANE DATA
1. OFFSET GIVEN TO LIP OF MEDIAN C&G
2. FOR TRANSITION DATA OF LEFT TURN LANES, SEE SECTION 3 ROADWAY LAYOUT PLANS.
3. LEFT TURN LANE WIDTH AT MEDIAN MID–BLOCK CROSSINGS MAY VARY FROM 11' WIDE TO 12' WIDE, SEE ROADWAY LAYOUT PLANS.

NOTES:
1. SEE SECTION 3 ROADWAY LAYOUT PLANS FOR SIDEWALK AND BUFFER LOCATIONS, DIMENSIONS AND ADDITIONAL INFORMATION.
2. SEE CERRILLOS ROAD PHASE IIC FINAL RIGHT–OF–WAY MAPS (NMP NO. S100130) DATED APRIL 4, 2014 FOR ADDITIONAL RIGHT–OF–WAY AND T.C.P. INFORMATION.
3. THE SIDE STREETS WILL NOT REQUIRE O.G.F.C. WITH THE EXCEPTION OF ST. MICHAEL'S DRIVE AND OSAGE AVENUE. SEE SURFACING SCHEDULE, SHEET 2–4 FOR ADDITIONAL INFORMATION.

JAMES H. BUCKMAN
NEW MEXICO
13062
REGISTERED PROFESSIONAL ENGINEER
7/9/15

NO.	DESCRIPTION	DATE	BY
3			
2			
1			

REVISIONS (OR CHANGE NOTICES)

CITY OF SANTA FE

CERRILLOS ROAD PHASE IIC
CAMINO CARLOS REY TO
LLANO STREET
SANTA FE COUNTY

PROPOSED TYPICAL
SECTION DETAILS

SCALE
NOT TO SCALE

DESIGNED BY: PB	DRAWN BY: PB	CHECKED BY: JB
DATE: 08/07/15	DATE: 08/07/15	DATE: 08/07/15

PARSONS BRINCKERHOFF

CITY OF SANTA FE	SHEET
NEW MEXICO PROJECT NO.	NO.
CN S100130	2–4

DESCRIPTION	STATION	to	STATION	LENGTH FEET	207000 SUBGRADE PREPARATION		303015 BASE COURSE				416000 MINOR PAVEMENT				** PG70-28 BITUM. MAT.	* HYDR. LIME	403600 OPEN GRADED FRICTION COURSE COMPLETE (5/ 8")			** PAC-20 BITUM. MAT.	**** HYDR. LIME	407000 ASPHALT MATERIAL FOR TACK COAT (TWO APPLICATIONS)			408100 PRIME COAT MATERIAL		
					AVG WIDTH	SQ. YDS.	AVG WIDTH	DEPTH INCHES	SQ. YDS.	TONS	AVG WIDTH	DEPTH INCHES	SQ. YDS.	TONS	TONS	TONS	AVG WIDTH	SQ. YDS.	TONS	TONS	TONS	AVG WIDTH	SQ. YDS.	TONS	AVG WIDTH	SQ. YDS.	TONS
CERRILLOS ROAD - MAINLINE																											
MAINLINE - NORTHEAST BOUND LANES	141+00.00		154+70.00	1,370.00	CALC.	7,388.84	CALC.	6.00	7,388.84	2,432.16	CALC	8.50	7,388.84	3,489.18	191.90	52.34	CALC	7,388.84	234.11	16.86	2.34	CALC	14,777.69	5.02	CALC	7,388.84	12.94
MAINLINE - SOUTHWEST BOUND LANES	141+00.00		154+70.00	1,370.00	CALC.	7,085.61	CALC.	6.00	7,085.61	2,332.35	CALC	8.50	7,085.61	3,345.98	184.03	50.19	CALC	7,085.61	224.50	16.16	2.25	CALC	14,171.23	4.81	CALC	7,085.61	12.41
CERRILLOS/ LUJAN INTERSECTION	154+70.00		155+77.00	107.00	CALC.	1,227.90	CALC.	6.00	1,227.90	404.18	CALC	8.50	1,227.90	579.84	31.89	8.70	CALC	1,227.90	38.90	2.80	0.39	CALC	2,455.80	0.83	CALC	1,227.90	2.15
MAINLINE - NORTHEAST BOUND LANES	155+77.00		167+50.00	1,173.00	CALC.	6,214.50	CALC.	6.00	6,214.50	2,045.60	CALC	8.50	6,214.50	2,934.62	161.40	44.02	CALC	6,214.50	196.90	14.18	1.97	CALC	12,428.99	4.22	CALC	6,214.50	10.89
MAINLINE - SOUTHWEST BOUND LANES	155+77.00		167+50.00	1,173.00	CALC.	6,138.03	CALC.	6.00	6,138.03	2,020.43	CALC	8.50	6,138.03	2,898.51	159.42	43.48	CALC	6,138.03	194.48	14.00	1.94	CALC	12,276.06	4.17	CALC	6,138.03	10.75
CERRILLOS/ ST. MICHAELS INTERSECTION	167+50.00		168+91.00	141.00	CALC.	1,300.55	CALC.	6.00	1,300.55	428.10	CALC	8.50	1,300.55	614.15	33.78	9.21	CALC	1,300.55	41.21	2.97	0.41	CALC	2,601.10	0.88	CALC	1,300.55	2.28
MAINLINE - NORTHEAST BOUND LANES	168+91.00		171+00.00	209.00	CALC.	593.79	CALC.	6.00	593.79	195.46	CALC	8.50	593.79	280.40	15.42	4.21	CALC	593.79	18.81	1.35	0.19	CALC	1,187.59	0.40	CALC	593.79	1.04
MAINLINE - SOUTHWEST BOUND LANES	168+91.00		171+00.00	209.00	CALC.	1,093.07	CALC.	6.00	1,093.07	359.80	CALC	8.50	1,093.07	516.17	28.38	7.74	CALC	1,093.07	34.63	2.49	0.35	CALC	2,186.14	0.74	CALC	1,093.07	1.91
MAINLINE - NORTHEAST BOUND LANES(TRANSITION)	171+00.00		172+00.00	100.00	CALC.	0.00	CALC.	0.00	0.00	0.00	CALC	8.50	307.56	145.24	7.99	2.18	CALC	307.56	9.74	0.70	0.10	CALC	615.12	0.21	CALC	307.56	0.54
MAINLINE - SOUTHWEST BOUND LANES(TRANSITION)	171+00.00		172+00.00	100.00	CALC.	0.00	CALC.	0.00	0.00	0.00	CALC	8.50	405.72	191.59	10.54	2.87	CALC	405.72	12.85	0.93	0.13	CALC	811.43	0.28	CALC	405.72	0.71
MAINLINE - NORTHEAST BOUND LANES(MEDIAN)	172+00.00		173+50.00	150.00	CALC.	33.33	CALC.	6.00	33.33	10.97	CALC	8.50	33.33	15.74	0.87	0.24	CALC	33.33	1.06	0.08	0.01	CALC	66.67	0.02	CALC	33.33	0.06
MAINLINE - SOUTHWEST BOUND LANES(MEDIAN)	172+00.00		173+50.00	150.00	CALC.	33.48	CALC.	6.00	33.48	11.02	CALC	8.50	33.48	15.81	0.87	0.24	CALC	33.48	1.06	0.08	0.01	CALC	66.97	0.02	CALC	33.48	0.06
CERRILLOS ROAD - MEDIAN LEFT TURN LANES																											
MEDIAN SE BOUND LEFT TURN LANE - INTERSECTION	139+00.00		141+00.00	200.00	CALC.	225.66	CALC.	6.00	225.66	74.28	CALC.	8.50	225.66	106.58	5.86	1.60	CALC.	225.66	7.15	0.51	0.07	CALC.	451.33	0.15	CALC.	225.66	0.40
MEDIAN NE BOUND LEFT TURN LANE - DRIVEWAY	141+00.00		143+09.57	209.57	CALC.	247.83	CALC.	6.00	247.83	81.58	CALC.	8.50	247.83	117.03	6.44	1.76	CALC.	247.83	7.85	0.57	0.08	CALC.	495.66	0.17	CALC.	247.83	0.43
MEDIAN SW BOUND LEFT TURN LANE - DRIVEWAY	145+17.29		147+68.67	271.38	CALC.	343.80	CALC.	6.00	343.80	113.17	CALC.	8.50	343.80	162.35	8.93	2.44	CALC.	343.80	10.89	0.78	0.11	CALC.	687.61	0.23	CALC.	343.80	0.60
MEDIAN NE BOUND LEFT TURN LANE - SIDE STREET	146+98.33		149+64.54	266.21	CALC.	335.20	CALC.	6.00	335.20	110.34	CALC.	8.50	335.20	158.29	8.71	2.37	CALC.	335.20	10.62	0.76	0.11	CALC.	670.40	0.23	CALC.	335.20	0.59
MEDIAN NE BOUND LEFT TURN LANE - SIDE STREET	157+97.33		160+67.11	289.78	CALC.	371.66	CALC.	6.00	371.66	122.34	CALC.	8.50	371.66	175.51	9.65	2.63	CALC.	371.66	11.78	0.85	0.12	CALC.	743.33	0.25	CALC.	371.66	0.65
MEDIAN SW BOUND LEFT TURN LANE - DRIVEWAY	160+67.07		162+77.00	209.93	CALC.	240.31	CALC.	6.00	240.31	79.10	CALC.	8.50	240.31	113.48	6.24	1.70	CALC.	240.31	7.61	0.55	0.08	CALC.	480.62	0.16	CALC.	240.31	0.42
MEDIAN NE BOUND LEFT TURN LANE - DRIVEWAY	161+63.56		164+08.88	225.32	CALC.	264.53	CALC.	6.00	264.53	87.07	CALC.	8.50	264.53	124.92	6.87	1.87	CALC.	264.53	8.38	0.60	0.08	CALC.	529.05	0.18	CALC.	264.53	0.46
SUBTOTAL CERRILLOS ROAD						33,138.11			33,138.11	10,907.96			33,851.39	15,985.38	879.20	239.78		33,851.39	1,072.55	77.22	10.73			22.98			59.31
ST. MICHAELS DRIVE																											
MAINLINE - NORTHWEST BOUND LANES	10+68.63		15+68.02	529.39	CALC.	3,061.85	CALC.	6.00	3,061.85	1,007.86	CALC.	8.50	3,061.85	1,445.87	79.52	21.69	CALC.	3,061.85	97.01	6.98	0.97	CALC.	6,123.69	2.08	CALC.	3,061.85	5.36
MAINLINE - SOUTHEAST BOUND LANES	10+68.63		15+68.02	529.39	CALC.	2,462.10	CALC.	6.00	2,462.10	810.44	CALC.	8.50	2,462.10	1,162.66	63.95	17.44	CALC.	2,462.10	78.01	5.62	0.78	CALC.	4,924.20	1.67	CALC.	2,462.10	4.31
OSAGE AVE.																											
MAINLINE - NORTHWEST BOUND LANES	7+50.00		9+50.79	200.79	CALC.	1,003.76	CALC.	6.00	1,003.76	330.40	CALC.	8.50	1,003.76	474.00	26.07	7.11	#REF!	1,003.76	31.80	2.29	0.32	CALC.	2,007.52	0.68	CALC.	1,003.76	1.76
SIDESTREETS																											
CAMINO CARLOS REY	10+66.39		12+00.00	143.61	CALC.	229.84	CALC.	6.00	229.84	75.66	CALC.	8.50	229.84	108.54	5.97	1.63	CALC.	0.00	0.00	0.00	0.00	CALC.	459.69	0.16	CALC.	229.84	0.40
MACLOVIA STREET	8+50.00		9+43.75	93.75	CALC.	312.50	CALC.	6.00	312.50	102.88	CALC.	8.50	312.50	147.57	8.12	2.21	CALC.	0.00	0.00	0.00	0.00	CALC.	625.00	0.21	CALC.	312.50	0.55
LUANA STREET	8+50.00		9+43.47	93.47	CALC.	311.58	CALC.	6.00	311.58	102.56	CALC.	8.50	311.58	147.13	8.09	2.21	CALC.	0.00	0.00	0.00	0.00	CALC.	623.16	0.21	CALC.	311.58	0.55
DECLOVINA STREET	8+00.00		9+43.48	143.48	CALC.	462.32	CALC.	6.00	462.32	152.18	CALC.	8.50	462.32	218.32	12.01	3.27	CALC.	0.00	0.00	0.00	0.00	CALC.	924.63	0.31	CALC.	462.32	0.81
LUJAN STREET	8+62.00		9+45.19	83.19	CALC.	276.99	CALC.	6.00	276.99	91.18	CALC.	8.50	276.99	130.80	7.19	1.96	CALC.	0.00	0.00	0.00	0.00	CALC.	553.99	0.19	CALC.	276.99	0.49
LUJAN STREET	10+54.95		11+75.00	120.05	CALC.	720.20	CALC.	6.00	720.20	237.07	CALC.	8.50	720.20	340.10	18.71	5.10	CALC.	0.00	0.00	0.00	0.00	CALC.	1,440.41	0.49	CALC.	720.20	1.26
VITALIA STREET	8+60.00		9+43.57	83.57	CALC.	260.01	CALC.	6.00	260.01	85.59	CALC.	8.50	260.01	122.78	6.75	1.84	CALC.	0.00	0.00	0.00	0.00	CALC.	520.01	0.18	CALC.	260.01	0.46
APACHE AVENUE	8+60.00		9+43.70	93.70	CALC.	308.25	CALC.	6.00	308.25	101.47	CALC.	8.50	308.25	145.56	8.01	2.18	CALC.	0.00	0.00	0.00	0.00	CALC.	616.50	0.21	CALC.	308.25	0.54
CHAMA AVENUE	9+45.93		9+58.03	12.10	CALC.	39.58	CALC.	6.00	39.58	13.03	CALC.	8.50	39.58	18.69	1.03	0.28	CALC.	0.00	0.00	0.00	0.00	CALC.	79.16	0.03	CALC.	39.58	0.07
SUBTOTAL SIDESTREETS/ TURNOUTS						9,448.98			9,448.98	3,110.29			9,448.98	4,462.02	245.41	66.93		6,527.71	206.82	14.89	2.07			6.42			16.55
TOTAL						42,587.09			42,587.09	14,018.25			43,300.37	20,447.40	1,124.61	306.71		40,379.10	1,279.37	92.11	12.79			29.40			75.86
USE						42,970			42,590				43,310					40,380						30			77

NOTE: THE FOLLOWING ITEM NUMBERS SHALL BE PAID FOR BY SY: 303015, 416000, 403600
THE TON QUANTITY SHOWN FOR THESE ITEMS IS FOR INFORMATIONAL USE ONLY.

ESTIMATED SURFACING FACTORS FOR CERRILLOS ROAD

ITEM	BITUMINOUS MATERIAL				*** UNIT WGT.	GALLONS	HYDR.
	**P.G. 70-28	**PAC 20	*SPEC. 407	*SPEC. 408	LBS/ CU.YD.	PER TON	LIME
BASE COURSE					3950		
PLANT MIX BITUMINOUS PAVEMENT SP-III & SP IV COMPLETE	5.5% WT. OF TOTAL MIX				4000		**** 1.5%
OPEN GRADED FRICTION COURSE		7.20% WT. OF TOTAL MIX			3650		**** 1.0%
BITUMINOUS MATERIAL FOR TACK COAT			0.08 GAL/ SQ. YD.			235.66	
PRIME COAT MATERIAL				0.45 GAL/ SQ. YD.		256.86	

* *FOR ESTIMATING PURPOSES ONLY, APPLICATION RATE WILL BE DETERMINED BY THE PROJECT MANAGER.
** FOR ESTIMATING PURPOSES ONLY, ACTUAL % WILL BE DETERMINED BY APPROVED MIX DESIGN.
*** FOR ESTIMATING PURPOSES ONLY, ACTUAL WEIGHTS WILL BE DETERMINED BY APPROVED MIX DESIGN
**** FOR ESTIMATING PUPOSES ONLY, TO BE DETERMINED BY THE PROJECT MANAGER

NOTES:
1. AMOUNTS OF BITUMINOUS MATERIAL SHOWN ARE FOR ESTIMATING PURPOSES ONLY. CORRECT AMOUNTS WILL BE DETERMINED BY THE MATERIALS AND TESTING LABORATORY.
2. *HYDRATED LIME AND PAC-20 QUANTITIES FOR OGFC ARE SHOWN FOR INFORMATION OF THE CONTRACTOR ONLY. THESE ITEMS ARE INCIDENTAL TO THE OGFC AND NO ADDITIONAL PAYMENT WILL BE MADE THEREFOR.

JAMES H. BUCKMAN NEW MEXICO 13062 REGISTERED PROFESSIONAL ENGINEER 12/7/15

NO.	DESCRIPTION	DATE	BY
3			
2			
1			

REVISIONS (OR CHANGE NOTICES)

CITY OF SANTA FE

CERRILLOS ROAD PHASE IIC
CAMINO CARLOS REY TO
LLANO STREET
SANTA FE COUNTY

SURFACING SCHEDULE

SCALE
NOT TO SCALE

DESIGNED BY: PB	DRAWN BY: PB	CHECKED BY: JB
DATE: 08/07/15	DATE: 08/07/15	DATE: 08/07/15

J:\33693 Cerrillos Ph IIC\04 Engineering–33693\Plans\2_Sheets\2–4 Surfacing Schedule1.dwg Oct 06, 2015 – 4:54pm Saved By: millernz

N.M. PROJECT NO. CN S100130 SHEET NO. 2–4

Bohannan ▲ Huston
Courtyard I 7500 Jefferson St. NE Albuquerque, NM 87109-4335
ENGINEERING ▲ SPATIAL DATA ▲ ADVANCED TECHNOLOGIES

CITY OF SANTA FE	SHEET
NEW MEXICO PROJECT NO.	NO.
CN S100130	2–5

ESTIMATED STRUCTURE QUANTITIES
STATION 141+00.00 TO 171+00.00

		570XX1	570XX2	570XX3	623340M	662XX1
		18" CULVERT PIPE	54" STORM DRAIN	60" STORM DRAIN	CURB DROP INLET MOD. TYPE B OR TYPE 1-F	MANHOLE TYPE T 4' DIAMETER
STATION	STRUCTURE	LIN FT	LIN FT	LIN FT	EACH	EACH
141+10.00	REMOVE EXISTING 60" STORM DRAIN PLUG AND CONNECT TO MH37					
	CONNECT TO MH37 @STA. 142+24.10 W/1–60"x117.54' TRUNKLINE			118		
142+22.82	BUILD 1–CDI#62 MOD TYPE 1–F 58.33 LT				1	
	CONNECT TO MH37 @STA. 142+24.10 W/1–18"x25.68' LATERAL	26				
142+24.10	BUILD 1–MH37 TYPE "T" 31.04' LT H= 13.70' D= 4'					1
	CONNECT TO MH36 @STA. 145+92.09 W/1–60"x366.08' TRUNKLINE			368		
142+28.37	BUILD 1–CDI#62 MOD TYPE "B" 58.33 RT				1	
	CONNECT TO MH37 @STA. 142+24.10 W/1–18"x88.39' LATERAL	90				
145+91.02	BUILD 1–CDI#60 MOD TYPE "B" 58.33 RT				1	
	CONNECT TO MH36 @STA. 145+92.09 W/1–18"x88.26' LATERAL	90				
145+92.09	BUILD 1–MH36 TYPE "T" 31.00' LT H= 13.55' D= 4'					1
	CONNECT TO MH35 @STA. 148+65.03 W/1–60"x272.95' TRUNKLINE			274		
145+92.40	BUILD 1–CDI#61 MOD TYPE "B" 58.33 LT				1	
	CONNECT TO MH36 @STA. 145+92.09 W/1–18"x26.25' LATERAL	28				
148+65.03	BUILD 1–CDI#59 MOD TYPE "B" 58.33 LT				1	
	CONNECT TO MH35 @STA. 148+65.03 W/1–18"x26.25' LATERAL	28				
	BUILD 1–CDI#58 MOD TYPE "B" 58.33 RT				1	
	CONNECT TO MH35 @STA. 148+65.03 W/1–18"x88.25' LATERAL	90				
	BUILD 1–MH35 TYPE "T" 31.00' LT H= 13.23' D= 4'					1
	CONNECT TO MH34 @STA. 153+04.53 W/1–60"x439.49' TRUNKLINE			440		
153+04.53	BUILD 1–CDI#57 MOD TYPE "B" 58.33 LT				1	
	CONNECT TO MH34 @STA. 153+04.53 W/1–18"x26.25' LATERAL	28				
	BUILD 1–CDI#56 MOD TYPE "B" 58.33 RT				1	
	CONNECT TO MH34 @STA. 153+04.53 W/1–18"x88.22' LATERAL	90				
	BUILD 1–MH34 TYPE "T" 31.00' LT H= 11.72' D= 4'					1
	CONNECT TO MH33 @STA. 157+17.83 W/1–60"x413.31' TRUNKLINE			414		
157+17.83	BUILD 1–CDI#55 MOD TYPE "B" 58.33 LT				1	
	CONNECT TO MH33 @STA. 157+17.83 W/1–18"x25.90' LATERAL	26				
	BUILD 1–MH33 TYPE "T" 31.35' LT H= 11.12' D= 4'					1
	CONNECT TO MH32 @STA. 161+67.22 W/1–60"x449.38' TRUNKLINE			450		
157+43.47	BUILD 1–CDI#54 MOD TYPE "B" 58.33 RT				1	
	CONNECT TO MH33 @STA. 157+17.83 W/1–18"x92.24' LATERAL	94				
161+67.22	BUILD 1–MH32 TYPE "T" 31.01' LT H= 14.11' D= 4'					1
	CONNECT TO MH31 @STA. 163+30.22 W/1–60"x162.62' TRUNKLINE			164		
163+30.22	BUILD 1–MH31 TYPE "T" 31.03' LT H= 12.17' D= 4'					1
	CONNECT TO MH30 @STA. 166+18.70 W/1–60"x288.01' TRUNKLINE			288		
163+30.48	BUILD 1–CDI#53 MOD TYPE "B" 58.33 LT				1	
	CONNECT TO MH31 @STA. 163+30.22 W/1–18"x26.22' LATERAL	28				
163+64.31	BUILD 1–CDI#52 MOD TYPE "B" 53.08 RT				1	
	CONNECT TO MH31 @STA. 163+30.22 W/1–18"x89.72' LATERAL	90				
	SUBTOTAL THIS SHEET	708	0	2516	12	7
	SUBTOTAL PREVIOUS SHEETS	0	0	0	0	0
	SUBTOTAL	708	0	2516	12	7

ALANDREN ETLANTUS
NEW MEXICO
19985
10/15
PROFESSIONAL ENGINEER

DESIGNED BY: K.S.L	DRAWN BY: L.S.M.	CHECKED BY: A.E.
DATE: 08.10.15	DATE: 08.10.15	DATE: 08.10.15

NO.	DESCRIPTION	DATE	BY
3			
2			
1			

REVISIONS (OR CHANGE NOTICES)

CITY OF SANTA FE
CERRILLOS ROAD PHASE IIC
CAMINO CARLOS REY TO
LLANO STREET
SANTA FE COUNTY

N.M. PROJECT NO. CN S100130 SHEET NO. 2–5

P:\2015\15081\CAD\Sheets\Phase IIC\15081SB_01_estQ.dwg
Oct 08, 2015 - 11:29am

Bohannan ▲ Huston Inc.
Courtyard I 7500 Jefferson St. NE Albuquerque, NM 87109-4335
ENGINEERING ▲ SPATIAL DATA ▲ ADVANCED TECHNOLOGIES

CITY OF SANTA FE	SHEET
NEW MEXICO PROJECT NO.	NO.
CN S100130	2–6

ESTIMATED STRUCTURE QUANTITIES
STATION 141+00.00 TO 171+00.00

STATION	STRUCTURE	570XX1 18" CULVERT PIPE LIN FT	570XX2 54" STORM DRAIN LIN FT	570XX3 60" STORM DRAIN LIN FT	623340M CURB DROP INLET MOD. TYPE B OR TYPE 1-F EACH	662XX1 MANHOLE TYPE T 4' DIAMETER EACH
166+18.59	BUILD 1–CDI#50 MOD TYPE "B" 49.33' RT				1	
	CONNECT TO MH30 @STA. 166+18.70 W/1–18"x72.03' LATERAL	74				
166+18.70	BUILD 1–MH30 TYPE "T" 23.78' LT H= 12.28' D= 4'					1
	CONNECT TO MH29 @ STA. 170+60.23 W/1–54"x442.28		444			
10+69.39	BUILD 1–CDI#50A MOD TYPE "B" 0.89' LT				1	
	CONNECT TO CDI#50 @STA. 166+18.59 W/1–18"x176.92' LATERAL	178				
166+19.32	BUILD 1–CDI#51 MOD TYPE "B" 48.33' LT				1	
	CONNECT TO MH30 @STA. 166+18.70 W/1–18"x23.47' LATERAL	24				
170+60.23	BUILD 1–MH29 TYPE "T" 11.63' LT H= 12.02' D= 4'					1
	BUILD 39.77 LF OF 54" RCP TO STA. 171+00.00		40			
170+60.37	BUILD 1–CDI#48 MOD TYPE "B" 34.33' RT				1	
	CONNECT TO MH29 @STA. 170+60.23 W/1–18"x44.88' LATERAL	46				
170+71.76	BUILD 1–CDI#49 MOD TYPE "B" 42.33' LT				1	
	CONNECT TO MH29 @STA. 170+60.23 W/1–18"x31.71' LATERAL	32				
170+72.62	BUILD 1–CDI#48A MOD TYPE "B" 34.33' RT				1	
	CONNECT TO CDI#48 @STA. 170+60.37 W/1–18"x10.13' LATERAL	12				
170+84.01	BUILD 1–CDI#49A MOD TYPE "B" 42.33' LT				1	
	CONNECT TO CDI#49 @STA. 170+71.76 W/1–18"x10.13' LATERAL	12				
171+00.00	INSTALL 54" RCP PLUG (INCIDENTAL ITEM)					
	SUBTOTAL THIS SHEET	378	484	0	7	2
	SUBTOTAL PREVIOUS SHEETS	708	0	2516	12	7
	SUBTOTAL	1086	484	2516	19	9
	USE QUANTITY	1086	490	2520	19	9

ALAMDREN ATLANTUS NEW MEXICO 19985 PROFESSIONAL ENGINEER 12/11/15

DESIGNED BY: K.S.L.	DRAWN BY: L.S.M.	CHECKED BY: A.E.
DATE: 08.10.15	DATE: 08.10.15	DATE: 08.10.15

NO.	DESCRIPTION	DATE	BY
3			
2			
1			

REVISIONS (OR CHANGE NOTICES)

CITY OF SANTA FE
CERRILLOS ROAD PHASE IIC
CAMINO CARLOS REY TO
LLANO STREET
SANTA FE COUNTY

N.M. PROJECT NO. CN S100130 SHEET NO. 2–6

P:\2014\014013\CAD\Design Plans\Phase IIC\2014013_112_estQTY.dwg
DEC 07, 2015 - 1:43pm

PARSONS BRINCKERHOFF

CITY OF SANTA FE	SHEET
NEW MEXICO PROJECT NO.	NO.
CN S100130	2-7

EARTHWORK

STATION TO STATION	Item No. 203000 Unclassified Excavation (CY)	Item No. 203200 Subexcavation (CY)	Item No. 203100 Borrow (CY)	Item No. 203211 Unstable Subgrade Stabilization (SY)	Embankment (CY)	Waste (CY)	Remarks
141+00.00 171+00.00	20,000				900	19,100	Cerrillos Road
141+00.00 171+00.00		3,000	3,000	40,635			
Camino Carlos Rey (RT)	84				27	57	Side Street
Maclovia Street (LT)	203				4	199	Side Street
Luana Street (LT)	182				1	181	Side Street
Declovina Street (LT)	206				35	171	Side Street
Lujan Street (LT & RT)	642				6	636	Side Street
Vitalia Street (LT)	150				7	143	Side Street
Apache Avenue (LT)	145				0	145	Side Street
Osage Avenue (LT)	546				2	544	Side Street
Saint Michaels Drive (RT)	2,543				211	2,332	Side Street
TOTALS	24,701	3,000	3,000	40,635	1,193	23,508	
USE	**25,000**	**3,000**	**3,000**	**40,635**			

NOTE:
1. Subexcavation will be required if deficient "R" value subgrade is encountered and shall be determined by samples and testing by the Contractor and approved by the Project Manager.
2. Removal of existing surfacing, base course and base material is included in the quantity listed above for item 203000-Unclassified Excavation. Removal of existing surfacing materials shall be incidental to Item 203000 Unclassified Excavation and no separate measurement or payment will be made therefore.
3. The Contractor shall request approval from the Project Manager prior to the use of Item No. 203100 Borrow.
4. The embankment shall be measured, and borrow shall be measured and paid, by the final compacted in-place volume, therefore no shrinkage quantity will be measured or paid.

REMOVAL OF SURFACING
FOR CONTRACTOR'S INFORMATION ONLY

STATION	TO	STATION	WIDTH	SQ. YDS.	REMARKS
B.O.P.		E.O.P.	VARIES	41,800	Existing Cerrillos Road & Cross Streets
USE				41,800	

NOTE: Removal of existing surfacing, base course and base material (aggregate base course) shall be included and paid for under Item No. 203000 - Unclassified Excavation

LUMP SUM & CONSTRUCTION ENGINEERING ITEMS

ITEM NO.	DESCRIPTION	UNIT	QUANTITY
201000	CLEARING AND GRUBBING	L.S.	L.S.
603281	SWPPP PLAN PREPARATION AND MAINTENANCE	L.S.	L.S.
618000	TRAFFIC CONTROL MANAGEMENT	L.S.	L.S.
621000	MOBILIZATION	L.S.	L.S.
663049	PRE-CONSTRUCTION UTILITY SURVEY	L.S.	L.S.
801000	CONSTRUCTION STAKING BY THE CONTRACTOR	L.S.	L.S.

JAMES H. BUCKMAN NEW MEXICO 13062 REGISTERED PROFESSIONAL ENGINEER 10/16/15

NO.	DESCRIPTION	DATE	BY
3			
2			
1			

REVISIONS (OR CHANGE NOTICES)

CITY OF SANTA FE

CERRILLOS ROAD PHASE IIC
CAMINO CARLOS REY TO
LLANO STREET
SANTA FE COUNTY

MISCELLANEOUS QUANTITIES

SCALE
NOT TO SCALE

DESIGNED BY: PB	DRAWN BY: PB	CHECKED BY: JB
DATE: 08/07/15	DATE: 08/07/15	DATE: 08/07/15

CONCRETE MEDIAN PAVEMENT 4" (COLORED AND PATTERNED) ITEM NO. 608404				
BEGIN STATION	LOCATION	END STATION	LOCATION	SQ. YD.
CERRILLOS ROAD - MEDIANS				
137+50.00	5.50 RT.	140+66.12	4.85 RT.	176.35
141+36.35	4.38' LT.	142+62.50	7.50 LT.	26.29
142+41.50	7.50 RT.	143+09.57	0.00 LT.	30.26
145+17.19	0.00	145+90.50	7.50' LT	30.66
145+69.50	7.50' RT	149+12.50	7.50' LT	43.27
148+91.50	7.50 RT.	149+64.54	0.00	30.64
152+80.56	2.73 LT.	154+70.63	3.85 LT.	111.38
155+79.41	3.85 RT.	158+20.48	1.83 RT.	138.17
158+60.46	5.94' LT	160+46.50	7.50 LT.	24.17
160+25.50	7.50 RT.	161+28.50	7.50' LT	27.00
161+07.50	7.50' RT	163+57.50	7.44' LT	27.92
163+36.50	7.50 RT.	164+08.88	0.00 LT.	30.65
164+98.62	2.73 LT.	167+59.51	3.00 LT.	148.54
168+97.89	5.50 RT.	172+53.59	4.50 RT	70.99
CERRILLOS ROAD - SIDEWALK BUFFER				
141+05.46	58.60 RT.	141+17.86	50.01RT.	7.14
142+09.56	59.00' RT.	142+50	59.00 RT.	20.84
143+02.76	59.00 RT.	143+43.20	59.00 RT.	20.84
143+24.06	59.00 LT.	143+58.01	59.00 LT.	3.78
144+08.80	59.00' LT.	145+17.00	59.00' LT	23.16
144+48.21	59.00 RT.	145+01.00	59.00 RT.	32.11
144+93.43	69.00 RT	145+07.01	69.00 RT.	15.78
145+47.00	69.00 RT	145+60.06	74.00 RT	4.84
145+53.00	59.00 RT.	145+61.66	59.00 RT.	6.26
145+57.00	59.00 LT.	146+10.23	57.68 LT	18.22
146+52.02	49.59 LT	146+64.57	61.50 LT.	11.18
147+15.82	74.00 LT	147+45.84	74.00 LT	17.80
147+31.86	59.00 LT.	147+47.45	59.00 LT.	7.79
147+97.84	59.00 LT.	148+06.50	59.00 LT.	6.25
147+99.45	74.00 LT.	148+12.50	80.27 LT.	9.83
148+37.50	80.94 LT	149+34.33	70.64 LT.	27.08
148+43.50	59.00 LT	148+92.24	57.68 LT.	22.22
149+13.32	59.00 RT.	149+21.98	59.00 RT.	6.25
149+34.33	50.70 LT.	149+46.61	62.50 LT.	10.13
149+78.45	59.00 RT.	149+87.11	59.00 RT.	6.25
150+05.29	60.07 LT	150+29.00	59.00 LT.	5.46
150+61.00	59.00 LT.	150+79.50	59.00 LT.	8.22
151+16.50	59.00 LT.	151+50.22	59.00 LT.	13.20
151+63.29	59.00 LT.	151+85.95	53.80 LT.	4.27
152+05.30	59.00 RT.	152+13.96	59.00 RT.	6.25
152+14.54	49.93 LT.	152+26.68	58.50 LT.	7.14
152+56.99	59.00 RT.	152+65.65	59.00 RT.	6.25
154+21.00	59.00 LT.	154+51.85	56.92 LT.	11.68
154+37.08	59.00 RT.	154+66.74	59.00 RT.	4.90
154+83.05	49.00 LT.	155+11.59	65.87 LT	45.95
155+50.83	71.50 RT	155+67.97	50.97 RT	27.39
155+63.78	69.50 LT.	155+92.18	69.50 LT.	11.28
155+86.00	59.00 LT.	155+93.79	59.00 LT.	1.95
156+52.89	59.00 RT.	156+83.00	59.00 RT.	5.12
157+38.01	69.50 LT.	157+79.05	69.47 LT.	14.75
157+46.29	59.00 RT.	157+53.22	59.00 RT.	1.54
157+79.05	49.93 LT.	157+91.20	58.50 LT.	7.15
158+10.22	59.00 RT.	158+18.88	59.00 RT.	6.25
160+07.43	59.00 LT.	160+30.09	53.80 LT.	4.27
160+37.34	59.00 RT.	160+46.00	59.00 RT.	6.25
160+59.61	49.93 LT.	160+71.76	58.50 LT.	7.15
160+94.00	59.00 RT.	161+02.66	59.00 RT.	6.25
161+74.02	59.00 LT.	162+01.50	59.00 LT.	6.22
162+38.50	59.00 LT.	162+51.18	59.00 LT.	6.87
162+66.60	59.00 RT.	162+75.18	59.00 RT.	6.26
163+19.51	59.00 RT.	163+27.80	58.96 RT	6.08
163+81.90	59.00 LT.	163+84.69	59.00 LT.	0.86
164+37.16	59.00 LT.	166+34.10	49.00 LT.	57.38
167+43.11	37.44 RT.	167+72.21	37.50 RT.	20.30
167+43.28	49.00 LT.	167+68.32	49.00 LT.	5.13
168+68.79	43.25 RT.	168+84.12	35.65 RT.	7.91
168+91.12	35.00 RT.	169+35.28	35.00 RT.	22.87
171+51.90	44.11 LT.	171+60.70	51.08 LT.	3.89
ST. MICHAELS DRIVE				
10+57.24	2.88' RT.	14+86.99	7.58 LT.	716.13
10+83.38	57.00 LT.	11+16.98	57.00 LT.	15.19
11+84.96	53.23 RT.	12+43.13	56.55 RT.	29.07
11+86.95	56.50 LT	12+50.04	54.06 LT	28.35
12+99.45	53.57 LT.	14+89.47	56.98 LT.	175.28
OSAGE AVENUE				
09+20.35	25.14' LT.	08+72.55	22.50' LT.	24.19
TOTAL				2538.75
USE				2540.00

DETECTABLE WARNING SURFACE - FOR INFORMATION ONLY - (INCIDENTAL TO ITEM NO. 608004 - CONCRETE SIDEWALK 4")			
STATION	LOCATION	AREA (SQ.FT.)	REMARKS
CERRILLOS ROAD			
141+04.29	RT.	11.35	CAMINO CARLOS REY
141+06.65	LT.	24.00	DRIVEWAY 20'
141+65.74	LT.	24.00	DRIVEWAY 30' OR WIDER
142+97.95	LT.	24.00	DRIVEWAY 30' OR WIDER
143+79.36	LT.	24.00	DRIVEWAY 30' OR WIDER
144+91.38	RT.	8.00	STATE OF NM CROSS WALK
145+27.00	RT.	24.00	DRIVEWAY 30' OR WIDER
145+37.00	LT.	24.00	DRIVEWAY 28'
146+65.47	LT.	11.00	MACLOVIA
147+11.80	LT.	12.95	MACLOVIA
148+25.00	LT.	24.00	DRIVEWAY 25'
149+47.68	LT.	13.26	LUANA
149+50.25	RT.	24.00	DRIVEWAY 30' OR WIDER
150+03.87	LT.	12.00	LUANA
150+45.00	LT.	24.00	DRIVEWAY 20'
150+98.00	LT.	24.00	DRIVEWAY 25'
152+28.80	LT.	14.92	DECLOVINA
152+35.47	RT.	24.00	DRIVEWAY 30' OR WIDER
152+79.79	LT.	12.26	DECLOVINA
154+78.72	LT.	12.00	LUJAN
154+79.01	RT.	12.30	LUJAN
154+91.99	RT.	16.00	LUJAN
155+12.74	LT.	12.00	LUJAN
155+50.40	RT.	12.00	LUJAN
155+56.39	LT.	12.00	LUJAN
155+71.43	RT.	12.00	LUJAN
155+71.74	LT.	12.00	LUJAN
157+81.72	RT.	24.00	DRIVEWAY 30' OR WIDER
157+93.35	LT.	15.18	VITALIA
158+40.86	LT.	12.23	VITALIA
160+70.00	RT.	24.00	DRIVEWAY 30' OR WIDER
160+73.97	LT.	15.67	APACHE
161+37.13	LT.	10.00	APACHE
162+20.00	LT.	24.00	DRIVEWAY 25'
162+97.36	RT.	24.00	DRIVEWAY 30' OR WIDER
164+11.00	LT.	24.00	DRIVEWAY 30' OR WIDER
167+41.38	RT.	10.00	ST. MICHAEL'S
167+55.01	RT.	10.00	ST. MICHAEL'S
167+66.00	RT.	10.00	ST. MICHAEL'S
167+71.32	RT.	10.00	ST. MICHAEL'S
167+79.05	LT.	12.00	OSAGE
168+04.60	LT.	12.00	OSAGE
168+65.90	RT.	14.00	ST. MICHAEL'S
168+64.61	LT	11.43	OSAGE
168+87.61	RT.	12.00	ST. MICHAEL'S
168+88.63	LT	11.43	OSAGE
169+72.05	RT.	20.00	DRIVEWAY 25'
169+76.50	LT.	20.00	DRIVEWAY 24'
170+30.84	LT.	20.00	DRIVEWAY 25'
171+04.39	RT.	18.00	LLANO
171+62.17	LT.	10.15	CHAMA
MACLOVIA STREET			
8+71.30	LT.	20.00	DRIVEWAY 30' OR WIDER
DECLOVINA STREET			
9+01.90	RT.	20.00	DRIVEWAY 30' OR WIDER
LUJAN STREET			
8+76.09	RT.	20.00	DRIVEWAY 16'
VITALIA STREET			
8+83.26	RT.	20.00	DRIVEWAY 18'
OSAGE AVENUE			
7+90.61	RT.	20.00	DRIVEWAY 30' OR WIDER
8+37.19	RT.	20.00	DRIVEWAY 30' OR WIDER
ST. MICHALES DRIVE			
12+52.12	LT.	14.45	CHAMISA
12+96.03	LT.	16.41	CHAMISA
14+85.12	RT.	30.23	DRIVEWAY
14+91.69	LT	14.00	PINON
TOTAL		1029.22	
USE		1030.00	

PARSONS BRINCKERHOFF

CONCRETE SIDEWALK 4" - ITEM NO. 608004					
BEGIN STA.	LOCATION	END STA.	LOCATION	LENGTH (ft)	SQ YD.
CERRILLOS ROAD					
140+43.45	59.00' LT	146+64.42	62.00' LT	624.53	416.35
141+05.10	59.10' RT	142+50.00	59.00' RT	149.93	99.95
143+02.76	59.00' RT	154+93.77	78.00' RT	1217.57	811.71
147+08.23	88.62' LT	149+46.83	63.00' LT	263.17	175.45
149+95.16	66.57' LT	151+42.20	63.00' LT	149.19	99.46
151+42.20	63.00' LT	152+30.08	65.35 LT	85.78	47.66
152+71.29	76.42' LT	153+67.00	59.00' LT	103.89	57.72
154+21.00	59.00' LT	155+11.78	66.34' LT	92.31	61.54
155+50.74	72.00' RT	156+83.00	59.00' RT	165.08	110.05
155+53.97	88.53' LT	157+55.89	61.25' LT	208.99	139.33
157+55.89	61.25' LT	157+91.55	59.00' LT	50.94	28.30
157+37.00	59.00' RT	167+36.27	75.40' RT	1073.39	715.59
158+34.81	88.52' LT	160+72.11	59.00' LT	215.25	143.50
161+24.99	63.85' LT	161+87.50	61.00' LT	77.97	43.32
161+87.50	61.00' LT	164+37.16	59.00' LT	234.38	156.25
164+37.16	59.00' LT	168+05.60	72.08 LT	380.55	211.42
168+59.30	71.74' LT	170+30.84	43.00' LT	202.86	112.70
170+30.84	43.00' LT	171+51.90	44.11' LT	121.06	53.80
168+68.24	43.75' RT	171+05.14	52.88' RT	252.03	140.02
CAMINO CARLOS REY					
11+15.84	9.00' RT	12+00.00	9.00' RT	84.16	56.11
10+64.55	9.00' LT	12+00.00	9.00' LT	135.45	90.30
MACLOVIA STREET					
8+50.00	17.00' RT	9+40.56	17.00' RT	90.56	60.37
8+50.00	17.00' LT	9+02.35	17.00' LT	52.35	34.90
LUANA STREET					
8+50.00	19.45' RT	9+39.37	17.14' RT	89.67	59.78
DECLOVINA STREET					
8+00.00	16.50' RT	9+43.68	17.58' RT	143.79	95.86
8+00.00	16.50' LT	9+02.42	16.50' LT	102.42	68.28
LUJAN STREET					
8+62.00	17.00' LT	9+04.53	17.00' LT	42.53	28.35
8+62.00	17.00' RT	9+34.93	17.00' RT	72.84	48.56
VITALIA STREET					
8+60.00	16.00' RT	9+36.45	16.00 RT	76.50	51.00
8+60.00	16.00' LT	9+02.97	16.00 LT	42.97	28.65
APACHE AVENUE					
8+85.60	16.57' RT	9+36.50	17.00' RT	50.90	33.93
8+50.00	17.00' LT	9+03.43	17.00' LT	53.43	35.62
ST. MICHAELS DRIVE					
10+81.58	60.70 RT	14+92.50	65.50 RT	415.36	276.91
10+28.86	81.40 LT	12+50.04	54.06' LT	227.88	151.92
12+98.89	54.06 LT	14+89.86	57.48 LT	191.00	127.33
OSAGE AVENUE					
7+50.00	20.00' RT	7+95.22	25.50' RT	47.11	31.41
8+32.27	33.50' RT	9+33.25	28.00' RT	102.79	68.53
8+72.05	26.23' LT	9+20.14	25.07' LT	48.10	32.07
SUBTOTAL					5003.99
LESS DRIVE PADS					1010.00
TOTAL					3993.99
USE					4000.00

(Incidental to Item 608004: Concrete Sidewalk 4") SIDEWALK CULVERT 24"		
BEGIN STA.	LOCATION	LENGTH (L.F.)
CERRILLOS ROAD		
145+03.00	59.00' LT	8.5
156+82.00	59.00' LT	11.5
162+52.18	59.00' LT	12.0
CAMINO CARLOS REY		
11+01.26	9.00' LT	5.0
11+24.21	9.00' LT	5.0
LUJAN STREET		
9+09.84	17.62' LT	5.0
VITALIA STREET		
9+01.97	16.00' LT	6.0
TOTAL		53.00
USE		53.00

JAMES H. BUCKMAN NEW MEXICO 13082 REGISTERED PROFESSIONAL ENGINEER 9/7/15

NO.	DESCRIPTION	DATE	BY
3			
2			
1			

REVISIONS (OR CHANGE NOTICES)

CITY OF SANTA FE

CERRILLOS ROAD PHASE IIC
CAMINO CARLOS REY TO
LLANO STREET
SANTA FE COUNTY

MISCELLANEOUS QUANTITIES

SCALE
NOT TO SCALE

DESIGNED BY: PB	DRAWN BY: PB	CHECKED BY: JB
DATE: 08/07/15	DATE: 08/07/15	DATE: 08/07/15

CITY OF SANTA FE	SHEET NO.
NEW MEXICO PROJECT NO.	
CN S100130	2-8

PARSONS BRINCKERHOFF

CITY OF SANTA FE	SHEET
NEW MEXICO PROJECT NO.	NO.
CN S100130	2–9

			DRIVEPAD 6" ITEM NO. 608106				CONCRETE LAYDOWN CURB - 6" ITEM NO. 609706	MINOR PAVING ITEM NO. 416000		SUBGRADE PREPARATION ITEM NO. 207000	BASECOURSE 4" ITEM NO. 303140	PRIME COAT MATERIAL ITEM NO. 408100
STA.	LOCATION		WIDTH (ft.)	LENGTH DRIVEPAD (ft)	LENGTH ASPHALT (ft)	SQ. YD.	LENGTH (ft.)	SQ. FT.	SQ. YD.	SQ.YD.	SQ. YD.	TON
CERRILLOS ROAD												
141+06.65	59.00	LT	20.00	6.00	5.00	13.33	20.00	100.00	11.11	11.11	11.1	0.02
141+65.74	59.00	LT	35.00	7.23	8.07	28.12	35.00	282.45	31.38	31.38	31.4	0.05
142+97.95	59.00	LT	36.00	6.77	10.23	27.08	36.00	368.28	40.92	40.92	40.9	0.07
143+79.36	59.00	LT	30.00	8.42	7.83	28.07	30.00	234.90	26.10	26.10	26.1	0.05
145+27.00	59.00	RT	40.00	21.20	VARIES	94.22	40.00	160.00	17.78	17.78	17.8	0.03
145+37.00	59.00	LT	28.00	9.52	18.55	29.62	28.00	519.40	57.71	57.71	57.7	0.10
148+25.00	59.00	LT	25.00	21.95	0.00	60.97	25.00	0.00	0.00	0.00	0.0	0.00
149+50.25	59.00	RT	45.00	20.92	VARIES	104.60	45.00	90.00	10.00	10.00	10.0	0.02
150+45.00	59.00	LT	20.00	13.09	5.22	29.09	20.00	104.40	11.60	11.60	11.6	0.02
150+98.00	59.00	LT	25.00	13.44	4.42	37.33	25.00	110.50	12.28	12.28	12.3	0.02
152+35.47	59.00	RT	31.00	20.75	13.34	71.47	31.00	413.54	45.95	45.95	45.9	0.08
157+81.72	59.00	RT	45.00	20.37	0.00	101.85	45.00	0.00	0.00	0.00	0.0	0.00
160+70.00	59.00	RT	36.00	20.19	0.00	80.76	36.00	0.00	0.00	0.00	0.0	0.00
162+20.00	59.00	LT	25.00	11.92	1.00	33.11	25.00	25.00	2.78	2.78	2.8	0.00
162+97.36	59.00	RT	33.00	20.12	0.00	73.77	33.00	0.00	0.00	0.00	0.0	0.00
164+11.00	59.00	LT	40.00	9.58	5.75	42.58	40.00	230.00	25.56	25.56	25.6	0.04
169+72.05	35.00	RT	25.00	5.00	2.50	13.89	25.00	62.50	6.94	6.94	6.9	0.01
169+76.50	43.00	LT	24.00	5.00	6.04	13.33	24.00	144.96	16.11	16.11	16.1	0.03
170+30.84	43.00	LT	25.00	5.00	8.18	13.89	25.00	204.50	22.72	22.72	22.7	0.04
MACLOVIA STREET												
8+71.30	17.00	LT	30.00	8.00	0.00	26.67	30.00	0.00	0.00	0.00	0.0	0.00
DECLOVINA STREET												
9+01.90	16.50	RT	30.00	6.00	10.64	20.00	30.00	319.20	35.47	35.47	35.5	0.06
LUJAN STREET												
8+76.09	17.00	RT	16.00	7.62	0.96	13.55	16.00	15.36	1.71	1.71	1.7	0.00
VITALIA												
8+83.26	16.00	RT	18.00	8.00	0.63	16.00	18.00	11.34	1.26	1.26	1.3	0.00
APACHE AVENUE												
8+80.00	17.00	LT	30.00	8.90	0.00	29.67	30.00	0.00	0.00	0.00	0.0	0.00
					TOTAL =	1002.97	712.00		377.37	377.37	377.37	0.66
					USE =	1010.00	720.00		380.00	380.00	380.00	1.00

NOTE:
1. C&G TRANSITIONS SHALL BE PAID FOR AS ITEM NO. 609472 – MODIFIED CONCRETE BARRIER CURB & GUTTER, TYPE D 6"x12".

2. CONCRETE LAYDOWN CURB SHALL BE PAID FOR AS ITEM NO. 609706 – CONCRETE LAYDOWN CURB 6"

3. COLORED CONCRETE PAVED AREA SHALL BE PAID FOR AS ITEM NO. 608206–CONCRETE MEDIAN PAVEMENT 6" (COLORED).

4. THE COST FOR THE SUBGRADE PREPARATION FOR THE CONCRETE MEDIAN PAVEMENT 6" SHALL BE INCLUDED IN THE PRICE FOR THAT ITEM.

6" DEPTH 4000 PSI COLORED CONCRETE PAVING ON COMPACTED BED COURSE. CONCRETE SHALL BE COLORED WITH MEDIUM BROOM FINISH. PROVIDE CONTROL JOINTS @ MINIMUM 6' O.C. AND EXPANSION JOINTS @ MINIMUM 12' O.C.

CONCRETE COLOR: COLOR TO MATCH MEDIAN STAMPED CONCRETE.

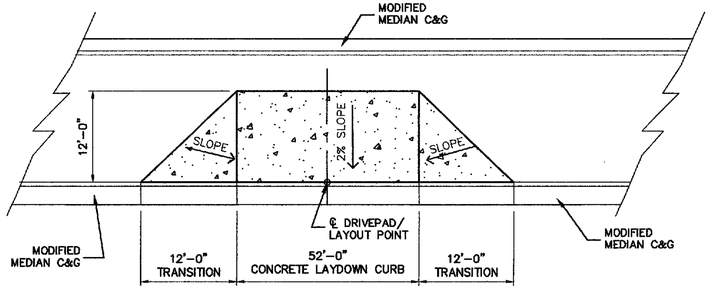

MEDIAN PARKING AREA FOR MAINTENANCE VEHICLES
NTS

MEDIAN PARKING AREA FOR MAINTENANCE VEHICLES		
STATION	ITEM NO. 608206 CONCRETE MEDIAN PAVEMENT 6" (COLORED) (SQ.YD.)	ITEM NO. 609706 CONCRETE LAYDOWN CURB 6" (LF)
151+50	82	52
TOTAL =	82	52

JAMES H. BUCKMAN NEW MEXICO 13062 REGISTERED PROFESSIONAL ENGINEER 10/8/15

NO.	DESCRIPTION	DATE	BY
3			
2			
1			

REVISIONS (OR CHANGE NOTICES)

CITY OF SANTA FE

CERRILLOS ROAD PHASE IIC
CAMINO CARLOS REY TO
LLANO STREET
SANTA FE COUNTY

MISCELLANEOUS QUANTITIES

SCALE
NOT TO SCALE

DESIGNED BY: PB	DRAWN BY: PB	CHECKED BY: JB
DATE: 08/07/15	DATE: 08/07/15	DATE: 08/07/15

HEADER CURB - ITEM 609200				
BEGIN STA.	LOCATION	END STA.	LOCATION	LENGTH (ft)
CERRILLOS ROAD				
140+43.45	65.00' LT	140+89.63	65.00' LT	47.39
140+91.79	95.08' RT	144+89.37	79.70' RT	405.33
141+23.75	65.00' LT	141+40.14	65.00' LT	16.22
141+91.34	65.00' LT	142+71.84	65.00' LT	78.41
143+24.06	65.00' LT	143+58.01	67.00' LT	33.11
143+96.36	67.00' LT	145+17.00	67.00' LT	121.04
144+93.37	79.70' RT	145+07.01	79.70' RT	13.64
145+47.01	79.70' RT	146+95.03	79.63' RT	148.02
146+02.03	75.26' LT	146+52.02	68.00' LT	55.68
147+01.03	79.62' RT	148+42.00	79.56' RT	140.97
150+13.37	66.57' LT	150+35.00	69.00' LT	21.82
150+55.00	69.00' LT	150+85.50	69.00' LT	30.50
151+10.50	69.00' LT	152+14.54	64.00' LT	105.21
152+78.53	80.63' LT	155+08.24	80.72' LT	229.71
155+63.78	69.50' LT	156+81.00	69.50' LT	117.22
156+83.00	69.50' LT	157+79.05	69.50' LT	96.05
156+50.00	79.05' RT	157+59.22	79.18' RT	109.22
158+08.61	69.00' RT	160+47.61	69.00' RT	241.68
158+65.91	69.87' LT	160+68.18	69.95' LT	202.27
160+51.75	79.55' RT	160+51.75	137.54' RT	58.00
160+88.25	79.54' RT	160+92.75	87.04' RT	111.35
161+24.20	69.85' LT	162+01.54	69.91' LT	77.34
162+38.50	69.93' LT	162+51.17	69.94' LT	12.67
162+53.17	69.94' LT	163+83.62	68.54' LT	128.85
163+13.40	79.16' RT	164+32.24	81.63' RT	120.67
164+36.65	67.14' LT	167+68.32	54.00' LT	333.30
164+38.24	81.81' LT	165+61.61	85.62' RT	123.42
165+67.60	85.80' RT	167+12.96	233.88' RT	214.27
168+94.37	48.75' RT	169+52.05	40.00' RT	58.91
169+92.05	40.00' RT	170+43.78	40.00' RT	51.73
169+96.00	48.00' LT	170+10.84	48.00' LT	14.84
170+50.84	47.00' LT	171+48.60	50.84' LT	99.80
DECLOVINA STREET				
8+57.93	24.75' LT	9+08.16	24.75' LT	50.23
VITALIA STREET				
8+60.00	22.89' LT	9+12.07	23.47' LT	52.68
APACHE AVENUE				
8+85.47	22.57' RT	9+29.00	23.00' RT	43.53
ST. MICHAELS DRIVE				
10+45.28	88.75' LT	12+37.54	60.06' LT	198.92
12+41.69	65.94' RT	12+73.76	67.68' RT	32.12
12+79.80	68.01' RT	14+98.66	75.94' RT	219.04
13+11.28	60.28' LT	14+77.25	63.26' LT	166.00
TOTAL				4381.16
USE				4390.00

CUT-OFF WALL ITEM 609201				
BEGIN STA.	LOCATION	END STA.	LOCATION	LENGTH (ft)
CERRILLOS ROAD				
145+57.12	68.00' LT	145+96.20	73.83' LT	46.52
147+15.82	74.00' LT	148+12.50	80.27' LT	98.24
148+58.00	79.38' RT	149+27.98	79.35' RT	69.98
149+72.45	79.33' RT	149+90.00	79.32' RT	17.55
150+30.00	79.31' RT	152+19.96	79.23' RT	190.00
154+70.00	79.13' RT	154+87.50	79.13' RT	17.50
155+63.20	79.09' RT	156+50.00	79.05' RT	86.80
160+88.00	78.87' RT	161+70.00	78.84' RT	82.00
162+40.00	78.81' RT	162+81.06	78.81' RT	41.27
169+30.00	48.00' LT	169+57.00	48.00' LT	27.00
CAMINO CARLOS REY				
11+15.84	15.00' RT	12+00.00	15.00' RT	84.16
10+99.67	14.00' LT	12+00.00	14.00' LT	100.33
OSAGE AVENUE				
8+50.39	33.00' RT	9+25.75	33.00' RT	75.36
TOTAL				936.71
USE				940.00

CONCRETE BARRIER CURB & GUTTER TYPE B 6" x 24" - ITEM NO. 609424				
BEGIN STA.	LOCATION	END STA.	LOCATION	LENGTH (ft)
CERRILLOS ROAD				
140+43.45	57.00' LT	146+66.58	61.24' LT	627.47
141+01.75	60.68' RT	148+42.00	59.00' RT	757.00
147+06.31	89.20' LT	149+49.60	64.79' LT	275.45
148+58.00	59.00' RT	154+97.26	87.08' RT	654.32
149+88.28	89.21' LT	152+32.00	64.78' LT	275.88
152+69.67	89.22' LT	155+14.65	68.48' LT	278.88
155+48.29	76.92' RT	167+52.99	89.57 RT	1249.18
155+52.06	89.10' LT	157+96.55	64.92' LT	276.62
158+32.89	89.08' LT	160+77.19	65.18' LT	276.61
161+15.08	88.82' LT	168+07.51	71.48' LT	725.13
168+57.73	84.93' LT	171+64.95	55.61' LT	346.82
171+93.59	47.79' LT	172+03.88	33.53' LT	20.38
CAMINO CARLOS REY				
10+64.55	7.00' LT	12+00.00	7.00' LT	135.45
11+15.60	7.00' RT	12+00.00	7.00' RT	84.4
MACLOVIA STREET				
8+50.00	15.00' RT	9+40.56	15.00' RT	90.56
8+50.00	15.00' LT	9+02.35	15.00' LT	52.35
LUANA STREET				
8+50.00	15.00' RT	9+36.85	15.00' RT	86.85
8+50.00	15.00' LT	9+02.31	15.00' LT	52.31
DECLOVINA STREET				
8+00.00	14.50' RT	9+36.71	14.50' RT	136.71
8+00.00	14.50' LT	9+02.42	14.50' LT	102.42
LUJAN STREET				
8+62.00	15.00' RT	9+34.93	15.00' RT	72.93
8+62.00	15.00' LT	9+04.53	15.00' LT	42.53
10+76.85	25.50' LT	11+04.27	33.05' LT	31.75
10+87.16	25.50' RT	11+09.24	35.50' RT	27.79
VITALIA STREET				
8+60.00	14.00' RT	9+36.45	14.00' RT	76.45
8+60.00	14.00' LT	9+02.97	14.00' LT	42.97
APACHE AVENUE				
8+85.65	14.57' RT	9+36.50	15.00' RT	50.85
8+50.00	15.00' LT	9+03.43	15.00' LT	53.43
ST. MICHAELS DRIVE				
10+94.10	44.25' RT	15+01.44	80.67' RT	420.73
10+60.72	55.00' LT	12+56.00	88.98' LT	232.88
12+85.44	78.23' LT	14+96.34	72.23' LT	245.44
OSAGE AVENUE				
7+50.00	18.00' RT	8+03.69	49.37' RT	75.16
8+27.40	46.02' RT	9+33.25	26.00' RT	118.96
8+72.05	18.00' LT	9+05.43	18.99' LT	33.38
SUBTOTAL				8030.04
LESS LAYDOWN CURB				720.00
TOTAL				7310.04
USE				7320.00

CONCRETE BARRIER CURB AND GUTTER TYPE D 6" X 18" ITEM 609478				
BEGIN STA.	LOCATION	END STA.	LOCATION	LENGTH (ft)
CERRILLOS ROAD				
167+40.17	38.22' RT.	167+74.16	38.44' RT	89.26
171+00.00	7.00' RT	173+50.00	10.36' RT	250.04
171+00.00	4.00' RT	173+50.00	4.64' LT	250.56
TOTAL				589.86
USE				590

CUT WALL STRUCTURAL CONCRETE, CLASS A ITEM 511000					
BEGIN STA.	LOCATION	END STA.	LOCATION	LENGTH (ft)	VOLUME (cy)
149+90.00	79.32' RT	150+30.00	79.31' RT	40.00	6.9
152+50.99	79.22' RT	154+70.00	79.13' RT	219.01	37.5
161+70.00	78.84' RT	162+40.00	78.81' RT	70.00	12.0
168+68.63	81.48' LT	169+30.00	48.00' LT	88.50	15.2
TOTAL				418	71.5
USE				420	72

PARSONS BRINCKERHOFF

CITY OF SANTA FE	SHEET
NEW MEXICO PROJECT NO.	NO.
CN S100130	2-10

MODIFIED CONCRETE BARRIER CURB AND GUTTER TYPE D 6" X 12" ITEM 609472				
BEGIN STA.	LOCATION	END STA.	LOCATION	LENGTH (ft)
137+50.00	-	142+63.50	7.50' LT.	1029.82
142+40.50	7.50' RT.	145+91.50	7.50' LT.	713.85
145+68.50	7.50' RT.	149+13.50	7.50' LT.	696.61
148+90.50	7.50' RT.	154+71.62	3.69' LT.	1171.65
155+78.43	3.69' RT.	160+47.50	7.50' LT.	945.09
160+24.50	7.50' RT.	161+29.50	7.50' LT.	220.80
161+06.50	7.50' RT.	163+58.50	7.50' LT.	510.35
163+35.50	7.50' RT.	167+60.49	2.81' LT.	858.90
168+96.89	5.50' RT.	171+00.00	-	407.92
LUJAN STREET				
10+85.00	8.50' RT	11+65.00	8.50' RT	80.00
T. MICHAELS DRIVE				
10+56.24	2.82' RT	14+87.91	7.97' LT	879.74
TOTAL				7514.73
USE				7,520

MOUNTABLE CURB AND GUTTER, TYPE A 6" X 24" ITEM NO. 609324				
BEGIN STA.	LOCATION	END STA.	LOCATION	LENGTH (ft)
148+42.00	59.00' RT	148+58.00	59.00' RT	16.00

CONCRETE VALLEY GUTTER - 6" x 36" ITEM NO. 609636					
STATION	TO	STATION	LOCATION	LENGTH (ft.)	REMARKS
140+90.16		141+08.85	RT.	18.33	CAMINO CARLOS REY
146+62.82		146+95.35	LT.	32.70	MACLOVIA ST.
149+44.87		149+77.35	LT.	32.70	LUANA ST.
152+27.27		152+58.69	LT.	31.64	DECLOVINA ST.
154+97.35		155+48.36	RT.	51.22	LUJAN ST.
155+09.01		155+41.38	LT.	32.58	LUJAN ST.
157+91.89		158+22.17	LT.	30.50	VITALIA ST.
160+72.64		161+04.91	LT.	32.49	APACHE AVE.
167+72.21		168+58.26	RT.	85.64	ST. MICHAEL'S DR.
167+99.34		168+46.68	LT.	47.96	OSAGE AVE.
171+60.33		171+89.71	LT.	29.63	CHAMA AVE.
TOTAL				425.39	
USE				430.00	

NO.	DESCRIPTION	DATE	BY
3			
2			
1			

REVISIONS (OR CHANGE NOTICES)

JAMES H. BUCKMAN NEW MEXICO 13062 REGISTERED PROFESSIONAL ENGINEER

CITY OF SANTA FE

CERRILLOS ROAD PHASE IIC
CAMINO CARLOS REY TO
LLANO STREET
SANTA FE COUNTY

MISCELLANEOUS QUANTITIES

SCALE
NOT TO SCALE

DESIGNED BY: PB	DRAWN BY: PB	CHECKED BY: JB
DATE: 08/07/15	DATE: 08/07/15	DATE: 08/07/15

PARSONS BRINCKERHOFF

CITY OF SANTA FE	SHEET
NEW MEXICO PROJECT NO.	NO.
CN S100130	2–11

REMOVAL OF STRUCTURES AND OBSTRUCTIONS
ITEM NO. 601000

STATION	LOCATION	STATION	LOCATION	QUANTITY	UNIT	DESCRIPTION
CERRILLOS ROAD						
137+17.75	4.75' RT.	142+64.25	23.03' RT.	1103	LF	PINNED CURB
139+87.75	4.25' RT.			1	EA	SIGN
140+21.59	173.41' RT.	140+64.29	99.56' RT.	84.4	LF	CURB & GUTTER
140+21.59	173.41' RT.	140+64.29	99.56' RT.	506.4	SF	SIDEWALK
140+34.77	180.20' RT.	145+15.10	63.93' RT.	585	LF	CURB & GUTTER
140+43.45	58.50' LT.	145+24.35	86.98' LT.	499.4	LF	CURB & GUTTER
140+43.45	56.00' LT.	145+23.00	67.00' LT.	2397	SF	SIDEWALK
140+80.00	107.5' RT.			46	LF	VALLEY GUTTER
140+96.67	77.19' RT.	145+15.10	63.93' RT.	518.7	LF	CURB & GUTTER
140+96.84	55.08' LT.	141+16.41	53.92' LT.	100	SF	DRIVEPAD
141+00.00	67.7' RT.	145+14.35	59.00' RT.	2396	SF	SIDEWALK
141+17.75	46.69' RT.			1	EA	SIGN
141+20.82	6.06 LT.			1	EA	SIGN
141+23.00	91.76' RT			1	EA	SIGN
141+43.6	62.00' RT			1	EA	STREETLIGHT (A)
141+47.82	57.00' LT.	141+83.66	59.00' LT.	300	SF	DRIVEPAD
141+54.64	11.66' LT.			1	EA	SIGN
141+59.34	40.72' RT.			1	EA	STREETLIGHT (A)
141+79.50	70.14' LT.			1	EA	LIGHT POLE (C)
142+33.30	30.30' RT.			1	EA	SIGN
142+45.84	80.83' RT			1	EA	SIGN
142+65.10	65.71' LT.			1	EA	STREETLIGHT (B)
142+78.45	76.79' LT.			1	EA	LIGHT POLE (C)
142+80.15	61.50' LT.	143+15.50	61.90' LT.	390	SF	DRIVEPAD
142+94.8	52.6' RT			1	EA	LIGHT POLE (C)
143+08.00	54.00' RT.			1	EA	POST
143+08.65	25.62' LT.	146+38.24	15.00' LT.	671	LF	PINNED CURB
143+10.13	24.25' LT.			1	EA	POST
143+64.10	61.00' LT.	143+94.40	61.00' LT.	250	SF	DRIVEPAD
143+79.86	33.63' RT.			1	EA	STREETLIGHT (A)
143+82.65	17.40' LT.			1	EA	POST
144+33.00	59.60' LT.	144+67.5	58.40' LT.	314	SF	DRIVEPAD
144+50.38	18.79' LT.			1	EA	SIGN
144+55.32	51.34' RT.			1	EA	LIGHT POLE (C)
144+86.82	61.83' LT.			1	EA	STREETLIGHT (B)
145+10.00	57' LT			1	EA	SIDEWALK CULVERT
145+10.42	38.31' RT.			1	EA	SIGN
145+30.12	40.88' RT.	146+43.10	51.10' RT.	266	LF	CURB & GUTTER
145+32.87	53.79' RT.	146+43.30	55.78' RT.	663	SF	SIDEWALK
145+41.78	63.36' RT			1	EA	SIGN
145+47.19	87.14' LT	146+92.66	147.97' LT	230	LF	CURB & GUTTER
145+47.19	87.14' LT.	146+92.66	147.97' LT	1380	SF	SIDEWALK
145+50.00	86.8' RT.	146+62.36	39.72' LT.	296	LF	MEDIAN CURB & GUTTER
145+57.06	57.89' LT			103	LF	VALLEY GUTTER
145+68.13	44.77 RT			1	EA	SIGN
145+95.67	38.11' RT.			1	EA	STREETLIGHT (A)
146+12.7	103.80' LT.	147+21.5	136.70' LT.	120	SF	DRIVEPAD
146+18.10	63.39' RT.			1	EA	LIGHT POLE (C)
146+35.48	14.16' LT.			1	EA	POST
146+60.53	59.19' LT.			1	EA	SIGN
146+60.53	59.19' LT.			1	EA	STREETLIGHT (B)
146+78.93	80.23' RT.	148+42.92	80.23' RT.	220.25	LF	CURB & GUTTER
146+84.7	60.15' RT.	148+35.8	53.00' RT	1032	SF	SIDEWALK
146+96.20	65.39' RT.			1	EA	SIGN
146+97.03	43.25' RT			1	EA	SIGN
147+03.52	55.26' L			15	EA	VALLEY GUTTER
147+07.22	73.00' RT			1	EA	SIGN
147+20.50	59.52' LT			1	EA	STREETLIGHT (B)
147+21.39	139.33' LT.	147+98.81	64.44' LT.	232	LF	CURB & GUTTER
147+21.39	139.33' LT.	148+12.00	63.00' LT.	1160	SF	SIDEWALK
147+23.02	47.86' RT.			1	EA	SIGN
147+30.05	0.42' RT.	149+04.89	12.35' LT.	357.43	LF	MEDIAN CURB & GUTTER
147+80.93	77.61' LT			5	EA	PARKING BLOCKS
147+83.90	66.16' LT.			1	EA	LIGHT POLE (C)
148+12.00	63.00' LT.	148+52.00	63.00' LT.	400	SF	DRIVEPAD
148+18.70	43.08' RT.			1	EA	STREETLIGHT (A)
148+27.46	69.70 LT			40	LF	VALLEY GUTTER
148+34.68	39.21 RT.			40	LF	VALLEY GUTTER
148+42.71	89.19' LT.	149+74.64	147.95' LT.	225	LF	CURB & GUTTER

REMOVAL OF STRUCTURES AND OBSTRUCTIONS
ITEM NO. 601000

STATION	LOCATION	STATION	LOCATION	QUANTITY	UNIT	DESCRIPTION
CERRILLOS ROAD						
148+52.95	64.27' LT.	149+74.64	147.95' LT.	1080	SF	SIDEWALK
148+54.34	54.14' RT.	149+24.00	53.66' RT.	625	SF	SIDEWALK
148+57.50	80.05' RT.	149+27.96	80.03' RT.	151.2	LF	CURB & GUTTER
148+58.14	64.15 RT.			1	EA	SIGN
148+71.37	80.04' RT.	148+71.92	58.17' RT.	21.88	LF	CHAINLINK FENCE
148+74.53	75.20' RT			2	EA	POST
148+75.42	61.39' LT			1	EA	POST
148+85.10	66.2' LT.	150+16.95	47.54' LT.	250	SF	SIDEWALK
148+97	58.0' RT			50	LF	RAILROAD TIES
149+01.92	62.49 RT.			1	EA	SIGN
149+02.55	11.98' LT.			1	EA	
149+31.55	58.57' LT.			1	EA	STREETLIGHT (B)
149+36.37	54.90' LT.			1	EA	SIGN
149+45.70	56.08' RT	149+46.27	89.07' RT	120	SF	SIDEWALK
149+50.88	40.03 RT.			70	LF	VALLEY GUTTER
149+72.45	80.00' RT	152+19.96	80.00' RT.	306.6	LF	CURB & GUTTER
149+73.58	57.61' RT.	152+18.28	58.15' RT.	705	SF	SIDEWALK
149+74.90	66.24 RT			1	EA	SIGN
150+03.25	1.61' RT.	151+98.99	11.42' LT.	399.7	LF	MEDIAN CURB & GUTTER
150+03.37	139.30' LT.	152+71.50	195.66' LT.	480.15	LF	CURB & GUTTER
150+06.09	1.06' RT.			1	EA	POST
150+11.22	71.05 LT			5	EA	PARKING BLOCKS
150+16.80	47.82' LT.	150+53.29	47.67' LT.	500	SF	DRIVEPAD
150+40.96	44.13' RT.			1	EA	STREETLIGHT (A)
150+82.00	47.50' LT.	151+10.00	47.50' LT.	260	SF	DRIVEPAD
151+12.00	47.79 LT.	151+73.9	47.40' LT.	366	SF	SIDEWALK
151+54.91	58.14' LT.			1	EA	STREETLIGHT (B)
151+72.00	47.30' LT.	152+10.00	47.10' LT.	450	SF	DRIVEPAD
151+95.62	11.44' LT.			1	EA	POST
151+98.58	60.60 RT			1	EA	SIGN
152+14.26	68.24' LT.			1	EA	LIGHT POLE (C)
152+20.20	79.59 LT			1	EA	SIGN
152+25.34	57.19' LT.			1	EA	SIGN
152+30.6	65.20' LT.	152+71.5	195.60' LT.	822	SF	SIDEWALK
152+36.80	41.18 RT			75	LF	VALLEY GUTTER
152+37.5	83.70' LT.	152+46.4	112.50' LT.	120	SF	DRIVEPAD
152+51.00	79.89' RT.	154+87.20	107.64' RT.	331.9	LF	CURB & GUTTER
152+52.61	58.50' RT.	154+93.46	59.89' RT.	2071	SF	SIDEWALK
152+75.31	1.54' RT.	154+79.60	10.89' LT.	416.8	LF	MEDIAN CURB & GUTTER
152+76.70	1.96' RT.			1	EA	POST
152+79.9	105.00' LT.	152+87.6	130.30' LT.	135	SF	SIDEWALK
152+81.20	44.77' RT.			1	EA	STREETLIGHT (A)
152+99.27	187.28' LT.	155+35.38	138.40' LT.	473.67	LF	CURB & GUTTER
153+23.77	90.86' LT.			1	EA	SIGN
153+36.02	78.40 RT			1	EA	POST
153+63.69	40.85' RT.			1	EA	TRAFFIC SIGNAL PULLBOX
153+70.95	5.10' LT.			1	EA	POST
154+55.43	62.58' RT			1	EA	BUS SHELTER
154+59.11	41.27' RT.			1	EA	TRAFFIC SIGNAL PULLBOX
154+77.13	10.12' LT.			1	EA	TRAFFIC SIGNAL
154+77.13	10.12' LT.			1	EA	TRAFFIC SIGNAL PULLBOX
154+79.17	51.09' RT.			1	EA	TRAFFIC SIGNAL
154+85.08	91.76' LT.			1	EA	SIGN
154+91.79	46.73' LT.	155+65.57	46.40' LT.	1790.34	SF	DRIVEPAD
154+92.08	51.24' LT.			1	EA	TRAFFIC SIGNAL
155+13.10	80.59' RT.	155+13.10	166.28' LT.	176.3	LF	MEDIAN CURB & GUTTER
155+23.01	40.55 RT			90	LF	VALLEY GUTTER
155+23.10	104.2' LT.	155+33.5	139.00' LT.	216	SF	SIDEWALK
155+50.69	72.51 LT			1	EA	SIDEWALK CULVERT
155+53.09	67.0' LT			1	EA	SIGN
155+54.07	53.03' LT.			1	EA	TRAFFIC SIGNAL PULLBOX
155+55.7	104.3' RT.	157+60.9	71.30' RT.	291	LF	CURB & GUTTER
155+55.73	1.43' RT.			1	EA	POST
155+56.06	129.31' LT.	156+55.82	54.83' LT.	1080	SF	SIDEWALK
155+56.99	80.75' LT.	156+11.50	64.63' LT.	57	LF	WALL
155+57.27	86.73' RT.	157+57.59	55.32' RT.	1554	SF	SIDEWALK
155+57.62	76.96' LT			1	EA	SIGN

DESIGNED BY: PB	DRAWN BY: PB	CHECKED BY: JB
DATE: 08/07/15	DATE: 08/07/15	DATE: 08/07/15

JAMES H. BUCKMAN
NEW MEXICO
13082
REGISTERED PROFESSIONAL ENGINEER
12/1/15

NO.	DESCRIPTION	DATE	BY
3			
2			
1			

REVISIONS (OR CHANGE NOTICES)

CITY OF SANTA FE

CERRILLOS ROAD PHASE IIC
CAMINO CARLOS REY TO
LLANO STREET
SANTA FE COUNTY

REMOVAL OF STRUCTURES
AND OBSTRUCTIONS

PARSONS BRINCKERHOFF

CITY OF SANTA FE	SHEET
NEW MEXICO PROJECT NO.	NO.
CN S100130	2-12

REMOVAL OF STRUCTURES AND OBSTRUCTIONS
ITEM NO. 601000

STATION	LOCATION	STATION	LOCATION	QUANTITY	UNIT	DESCRIPTION
CERRILLOS ROAD						
155+59.70	49.07' LT.			1	EA	TRAFFIC SIGNAL PULLBOX
155+59.76	52.77' LT.			1	EA	TRAFFIC SIGNAL
155+62.00	129.90' LT.	156+55.8	46.70' LT.	188.7	LF	CURB & GUTTER
155+62.46	2.0' RT.	160+41.26	9.28' LT.	967.2	LF	MEDIAN CURB & GUTTER
155+64.41	2.40' RT.			1	EA	TRAFFIC SIGNAL PULLBOX
155+65.91	2.70 RT.			1	EA	TRAFFIC SIGNAL
155+66.58	47.15' RT.			1	EA	TRAFFIC SIGNAL
155+68.75	61.36' RT.			1	EA	TRAFFIC SIGNAL PULLBOX
155+71.93	69.88' RT.			1	EA	POST
155+84.63	54.04' LT.			1	EA	STREETLIGHT (B)
155+84.65	54.04' LT.			1	EA	BUS SHELTER
155+95.03	48.84' LT.			1	EA	POST
156+11.5	64.63' LT	156+33.03	69.40' LT	30.53	LF	CURB & GUTTER
156+18.77	71.07' LT.			1	EA	SIGN
156+53.55	64.25' LT.			1	EA	SIGN
156+55.81	46.69' LT.	157+77.21	47.40' LT.	1888.14	SF	DRIVEPAD
156+82.61	58.0' LT			100	LF	VALLEY GUTTER
156+89.82	6.40' LT.			1	EA	TRAFFIC SIGNAL PULLBOX
157+00.96	47.01' RT.			1	EA	STREETLIGHT (A)
157+05.4	67.70' LT.	158+18.2	138.20' LT.	181	LF	CURB & GUTTER
157+05.4	67.70' LT.	158+18.2	138.20' LT.	1086	SF	SIDEWALK
157+33.70	40.60' RT.	158+32.79	41.41' RT.	2151.99	SF	DRIVEPAD
157+45.39	68.61' RT.			1	EA	SIGN
157+49.50	9.69' LT.			1	EA	POST
157+50.75	66.28' LT			1	EA	SIGN
157+55.77	69.80' RT			1	EA	SIGN
157+77.21	47.40' LT.	158+44.25	46.09' LT.	1767.35	SF	DRIVEPAD
157+83.73	56.82' LT.			1	EA	SIGN
158+04.20	79.60' RT.	160+49.00	79.70' RT.	302	LF	CURB & GUTTER
158+06.41	59.00' RT.	160+49.2	59.00' RT.	1458	SF	SIDEWALK
158+08.50	71.45' RT			1	EA	SIGN
158+16.96	68.43' RT.			1	EA	SIGN
158+37.97	56.01' LT.			1	EA	STREETLIGHT (B)
158+45.00	130.30' LT.	160+91.50	114.00' LT.	392	LF	CURB & GUTTER
158+47.89	56.98' LT.			1	EA	BOLLARDS
158+48.03	3.68' RT.			1	EA	POST
158+48.07	53.16' LT.			1	EA	BOLLARDS
158+51.78	56.99' LT.			1	EA	BOLLARDS
158+51.94	53.26' LT.			1	EA	BOLLARDS
159+09.13	58.07 LT			4	EA	SIGN
159+14.92	46.11' RT.			1	EA	STREETLIGHT (A)
159+70.60	58.18' LT.			1	EA	SIGN
159+91.00	49.25' RT			1	EA	SIGN
160+16.73	58.06' LT.			1	EA	SIGN
160+28.03	56.10' LT.			1	EA	STREETLIGHT (B)
160+29.43	41.37' RT.	161+00.95	40.83' RT.	1435.5	SF	DRIVEPAD
160+45.69	70.33' RT.			1	EA	SIGN
160+52.86	43.45' LT.	161+33.74	44.89' LT.	1918.51	SF	DRIVEPAD
160+62.24	72.45' LT			1	EA	SIGN
160+67.90	41.53' RT			58	LF	VALLEY GUTTER
160+70.53	57.98' LT.			1	EA	SIGN
160+80.58	79.54' RT.	162+81.06	79.48' RT.	264	LF	CURB & GUTTER
160+80.60	60.00' RT.	162+82.20	60.00' RT.	1206	SF	SIDEWALK
161+09.10	67.00' LT.	163+90.7	67.00' LT.	1680	SF	SIDEWALK
161+15.83	43.39' RT			1	EA	SIGN
161+22.00	71.67' LT.			1	EA	LIGHT POLE (C)
161+29.65	140.22' LT.	163+98.00	63.60' LT.	390	LF	CURB & GUTTER
161+31.83	46.57' RT			1	EA	STREETLIGHT (A)
161+33.74	44.89' LT.	161+67.00	45.13' LT.	822.83	SF	DRIVEPAD
161+38.84	4.00' RT.	163+81.21	10.67' LT.	492.3	LF	MEDIAN CURB & GUTTER
161+40.54	4.93' RT.			1	EA	SIGN
161+95.52	45.91' LT.	162+41.24	46.08' LT.	971.2	SF	DRIVEPAD
162+13.6	61.00' RT.	166+65.3	73.00' RT.	2265	SF	SIDEWALK
162+38.16	3.61' LT.			1	EA	SIGN
162+42.69	55.16' LT			1	EA	STREETLIGHT (B)
162+57.11	46.19' LT.	162+91.32	46.45' LT.	744.26	SF	DRIVEPAD
162+57.29	10.45' LT.			1	EA	TRAFFIC SIGNAL PULLBOX

REMOVAL OF STRUCTURES AND OBSTRUCTIONS
ITEM NO. 601000

STATION	LOCATION	STATION	LOCATION	QUANTITY	UNIT	DESCRIPTION
CERRILLOS ROAD						
162+57.44	10.94' LT.			1	EA	DROP INLET
162+58.50	42.15' RT.			1	EA	TRAFFIC SIGNAL PULLBOX
162+62.91	40.14' RT.	163+36.16	40.20' RT.	1500.49	SF	DRIVEPAD
162+68.67	49.84' RT.			1	EA	POST
162+70.45	71.18' RT.			1	EA	SIGN
162+75.24	5.13' LT.			1	EA	SIGN
162+99.02	40.42' RT			60	LF	VALLEY GUTTER
163+13.40	79.66' RT.	166+69.00	490.30' RT.	850	LF	CURB & GUTTER
163+14.99	56.43' RT.	166+59.90	68.54' RT.	2086.86	SF	SIDEWALK
163+25.40	71.62' RT			1	EA	SIGN
163+47.41	51.09' RT.			1	EA	SIGN
163+47.58	51.08' RT.			1	EA	SIGN
163+51.74	46.63' RT.			1	EA	STREETLIGHT (A)
163+86.92	45.98' LT.	164+41.48	44.34' LT.	1590.02	SF	DRIVEPAD
163+90.98	1.78' LT.	167+48.47	3.51' LT.	722.44	LF	MEDIAN CURB & GUTTER
164+09.48	10.34' LT.			1	EA	SIGN
164+20.90	51.65' RT.			1	EA	SIGN
164+31.16	67.98' LT.	166+51.42	61.93' LT.	253	LF	CURB & GUTTER
164+31.5	68.00' LT.	166+50.00	61.90' LT.	1311	SF	SIDEWALK
164+47.13	51.76' LT.			1	EA	SIGN
164+63.46	52.52' LT			1	EA	STREETLIGHT (B)
164+86.87	49.56' RT.			1	EA	TRAFFIC SIGNAL PULLBOX
165+21.18	3.02' LT.			1	EA	SIGN
165+23.06	48.02' RT.			1	EA	TRAFFIC SIGNAL PULLBOX
165+26.02	2.01' LT.			1	EA	POST
165+73.33	50.85' RT			1	EA	SIGN
165+77.34	52.03' RT.			1	EA	STREETLIGHT (A)
165+93.67	48.60' LT.			1	EA	POST
166+00	46.06' LT			2	EA	BOLLARDS
166+18.32	57.78' RT.			1	EA	SIGN
166+18.53	63.65' RT.			1	EA	POST
166+37.01	40.78' LT.	166+91.35	39.72' LT.	805.35	SF	DRIVEPAD
166+74.29	88.14' RT.			1	EA	STREETLIGHT (A)
166+76.43	61.19' LT.	168+20.24	178.45' LT.	289	LF	CURB & GUTTER
166+76.43	61.19' LT.	168+31.1	166.24' LT.	1500	SF	SIDEWALK
166+78.3	47.50' RT.	167+69.27	59.17' RT.	326.5	LF	MEDIAN CURB & GUTTER
166+81.71	58.41' LT.			1	EA	SIGN
166+82.56	480.13' RT			1	EA	STREETLIGHT (A)
166+86.29	455.46' RT			1	EA	SIGN
166+88.78	52.80 RT.			1	EA	SIGN
166+90.00	59.00' RT.	167+68.50	59.00' RT.	444	SF	SIDEWALK
166+91.35	39.72' LT.	167+30.60	37.85' LT.	828.21	SF	DRIVEPAD
167+07.70	65.41' RT			1	EA	SIGN
167+17.09	142.03' RT.			1	EA	SIGN
167+18.00	136.4' RT.	166+93.31	467.95' RT.	2022	SF	SIDEWALK
167+20.90	197.35' RT.			1	EA	STREETLIGHT (A)
167+26.07	72.98' RT.			1	EA	TRAFFIC SIGNAL PULLBOX
167+40.96	2.98' LT.			1	EA	DROP INLET
167+41.68	3.05' LT.			1	EA	TRAFFIC SIGNAL PULLBOX
167+46.31	2.86' LT.			1	EA	SIGN
167+54.78	37.78' LT.	167+86.15	37.40' LT.	656.62	SF	DRIVEPAD
167+58.23	346.80' RT.			1	EA	CANTILEVER SIGN STRUCT.
167+61.80	63.45' RT.			1	EA	TRAFFIC SIGNAL
167+68.53	84.14' RT.			1	EA	DROP INLET
167+97.31	43.16' LT.			1	EA	TRAFFIC SIGNAL
167+97.79	67.27' RT.			1	EA	SIGN
167+98.6	61.80' RT.	167+52.4	468.10' RT.	824	LF	MEDIAN CURB & GUTTER
168+17.31	464.22' RT			1	EA	STREETLIGHT (A)
168+19.26	404.29' RT			1500	SF	DRIVEPAD
168+21.96	117.49' LT.			1	EA	STREETLIGHT (B)
168+28.78	337.71 RT.			1	EA	SIGN
168+29.39	496.80' RT.	168+41.91	297.63' RT.	1200	SF	SIDEWALK
168+37.78	500.76' RT.	168+60.77	291.04' RT.	246	LF	CURB & GUTTER
168+38.09	174+78' LT			1	EA	SIGN
168+38.16	230.35' RT.			1	EA	SIGN
168+40.20	226.97' RT			1	EA	STREETLIGHT (A)
168+42.80	185.13' RT.			1	EA	SIGN

JAMES H. BUCKMAN
NEW MEXICO
13062
REGISTERED PROFESSIONAL ENGINEER
10/8/14

NO.	DESCRIPTION	DATE	BY
3			
2			
1			

REVISIONS (OR CHANGE NOTICES)

CITY OF SANTA FE

CERRILLOS ROAD PHASE IIC
CAMINO CARLOS REY TO
LLANO STREET
SANTA FE COUNTY

REMOVAL OF STRUCTURES
AND OBSTRUCTIONS (CONTINUED)

DESIGNED BY: PBA	DRAWN BY: PB RJ	CHECKED BY: JBJB
DATE: 08/07/2014	DATE: 08/07/2014	DATE: 08/07/2014

J:\336833 Cerrillos Ph IIC Eng\Engineering\336833_Plans\23 Sheets\2-12 Removals2.dwg 10/31/2014 By: rjelen PM MDT

N.M. PROJECT NO. CN S100130 SHEET NO. 2-12

PARSONS BRINCKERHOFF

CITY OF SANTA FE	SHEET
NEW MEXICO PROJECT NO.	NO.
CN S100130	2–13

REMOVAL OF STRUCTURES AND OBSTRUCTIONS
ITEM NO. 601000

STATION	LOCATION	STATION	LOCATION	QUANTITY	UNIT	DESCRIPTION
CERRILLOS ROAD						
168+44.26	251.96' RT.	171+00.14	52.69' RT.	3510	SF	SIDEWALK
168+47.19	250.34' RT.			1	EA	SIGN
168+47.57	247.19' RT.			1	EA	SIGN
168+47.81	47.95' RT.			1	EA	TRAFFIC SIGNAL PULLBOX
168+53.17	114.14' RT			1	EA	SIGN
168+56.74	68.91' RT.			1	EA	TRAFFIC SIGNAL PULLBOX
168+61.47	60.61' RT.			1	EA	POST
168+66.42	117.17' LT.	171+66.81	62.26' LT.	400	LF	CURB & GUTTER
168+66.48	48.97' LT.			1	EA	TRAFFIC SIGNAL
168+66.77	68.92' LT			1	EA	SIGN
168+69.26	43.56' RT.			1	EA	TRAFFIC SIGNAL PULLBOX
168+73.00	114.80' LT.	171+66.81	62.26' LT.	2400	SF	SIDEWALK
168+73.16	43.59' RT.			1	EA	TRAFFIC SIGNAL
168+73.86	262.56' RT.	171+07.14	52.96' RT.	520	LF	CURB & GUTTER
168+79.30	101.94' RT			7	EA	POST
168+82.7	2.59' RT.	173+50.00	3.14' RT.	937.6	LF	MEDIAN CURB & GUTTER
168+83.76	2.58' RT.			1	EA	SIGN
168+86.66	3.02' RT.			1	EA	TRAFFIC SIGNAL PULLBOX
168+88.20	42.83' LT			100	LF	RAILROAD TIES
168+91.95	2.73' RT.			1	EA	DROP INLET
168+92.42	2.85' RT.			1	EA	TRAFFIC SIGNAL PULLBOX
168+96.58	3.12' RT.			1	EA	TRAFFIC SIGNAL PULLBOX
168+97.06	207.85' LT.			1	EA	SIGN
169+07.05	73.74' RT.			1	EA	SIGN
169+10.03	247.88' LT.			1	EA	SIGN
169+13.52	68.16' RT			1	EA	STREETLIGHT (A)
169+13.52	68.16' RT.			1	EA	STREETLIGHT (A)
169+26.67	2.11' RT.			1	EA	TRAFFIC SIGNAL PULLBOX
169+27.37	55.80' RT.			1	EA	SIGN
169+47.40	34.42' LT.	170+00.77	36.59' LT.	472.92	SF	DRIVEPAD
169+50.55	39.86' LT			1	EA	STREETLIGHT (B)
169+63.13	53.33' LT			1	EA	SIGN
169+67.52	36.00' RT.	169+96.02	35.16' RT.	378.8	SF	DRIVEPAD
170+02.59	35.63' RT.	170+35.60	35.62' RT.	437.1	SF	DRIVEPAD
170+11.84	36.85' LT.	170+49.66	36.51' LT.	211.95	SF	DRIVEPAD
170+55.13	38.78' RT			1	EA	STREETLIGHT (A)
170+55.13	38.78' RT.			1	EA	STREETLIGHT (A)
170+69.77	39.04' LT.			1	EA	SIGN
170+81.48	3.68' RT.			1	EA	DROP INLET
170+81.48	3.61' RT.			1	EA	TRAFFIC SIGNAL PULLBOX
170+85.01	3.24' RT.			2	EA	SIGN
170+94.15	36.39' RT.	171+52.27	35.76' RT.	491.99	SF	DRIVEPAD
171+01.11	140.89' RT.			1	EA	SIGN
171+01.93	82.46' RT.			1	EA	SIGN
171+03.94	36.63' LT.	171+43.61	36.82' LT.	222.41	SF	DRIVEPAD
171+22.62	35.58' RT			47	LF	VALLEY GUTTER
171+39.93	44.43' RT.			1	EA	SIGN
171+54.60	44.67' LT.			1	EA	SIGN
171+58.00	3.87' RT.			2	EA	SIGN
171+76.50	35.66' LT			45	LF	VALLEY GUTTER
172+36.51	3.6' RT			1	EA	STREETLIGHT (A)
172+36.51	3.63' RT.			1	EA	STREETLIGHT (A)
172+39.21	86.24' RT.			1	EA	POST
172+95.86	55.32' RT.			1	EA	POST
174+78.14	0.78' RT.			1	EA	SIGN
175+07.59	48.46' LT.			1	EA	SIGN
175+17.56	48.04' RT.			1	EA	SIGN
175+49.78	0.85' RT.			1	EA	SIGN

SUMMARY OF REMOVAL OF STRUCTURES AND OBSTRUCTIONS
FOR CONTRACTOR'S INFORMATION ONLY

CURB & GUTTER =	8,970	L.F.
MEDIAN CURB & GUTTER =	5,920	L.F.
VALLEY GUTTER =	789	L.F.
PINNED CURB =	671	L.F.
CHAINLINK FENCE =	22	L.F.
SIDEWALK =	40,730	S.F.
DRIVEPAD =	25,790	S.F.
POSTS =	31	E.A.
BOLLARDS =	6	E.A.
SIGNS =	93	E.A.
TRAFFIC SIGNALS =	10	E.A.
PULLBOXES =	22	E.A.
STREETLIGHT (A)	23	E.A. (A)
STREETLIGHT (B)	12	E.A. (B)
LIGHT POLES (C)	8	E.A. (C)
DROP INLETS =	5	E.A.
BUS BENCH =	1	E.A. *
BUS SHELTER=	2.0	E.A. *
RAILROAD TIES	150.0	LF
PARKING BLOCKS	10.0	EA.
SIDEWALK CULVERT	2.0	EA.

* Salvage to City Yard
(A) STREETLIGHTS IN EXISTING R.O.W. TO BE REMOVED, THIS CONTRACT
(B) STREETLIGHTS IN EXISTING R.O.W. TO BE REMOVED BY OTHERS
(C) PARKING LIGHT POLES IN EXISTING R.O.W. TO BE REMOVED, THIS CONTRACT
SEE GENERAL NOTES, SHEET 1-9 "REMOVAL OF ENCROACHMENTS"

JAMES H. BUCKMAN NEW MEXICO 13062 REGISTERED PROFESSIONAL ENGINEER 12/8/15

NO.	DESCRIPTION	DATE	BY
3			
2			
1			

REVISIONS (OR CHANGE NOTICES)

CITY OF SANTA FE

CERRILLOS ROAD PHASE IIC
CAMINO CARLOS REY TO
LLANO STREET
SANTA FE COUNTY

REMOVAL OF STRUCTURES
AND OBSTRUCTIONS (CONTINUED)

DESIGNED BY: PB	DRAWN BY: PB	CHECKED BY: JB
DATE: 08/07/15	DATE: 08/07/15	DATE: 08/07/15

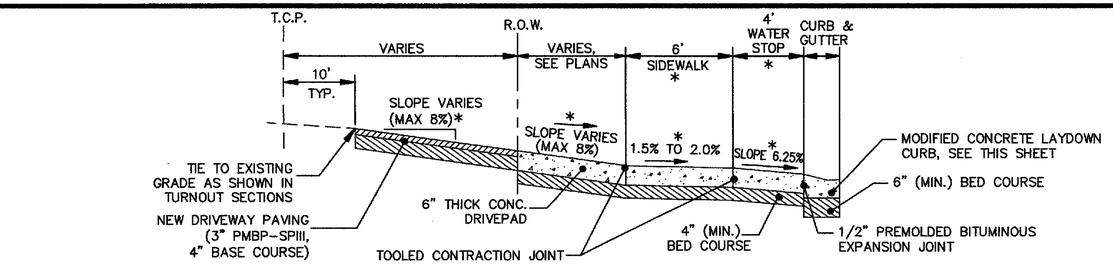

TYPICAL DRIVEPAD SECTION A–A
(SLOPE UP TO EXISTING)

NOTE: –3" PMBP TYPE SP–III TO BE PAID FOR UNDER ITEM 416000 – MINOR PAVING
–4" BASE COURSE TO BE PAID FOR UNDER ITEM 304140 – 4" BASE COURSE

*TYPICAL DRIVEPAD DETAIL: SPECIAL EXCEPTIONS MAY APPLY TO THE TYPICAL DRIVEPAD DETAIL. SEE TURNOUT SECTIONS, SECTION 4 SERIES FOR ACTUAL DRIVEPAD SECTIONS/PROFILES.

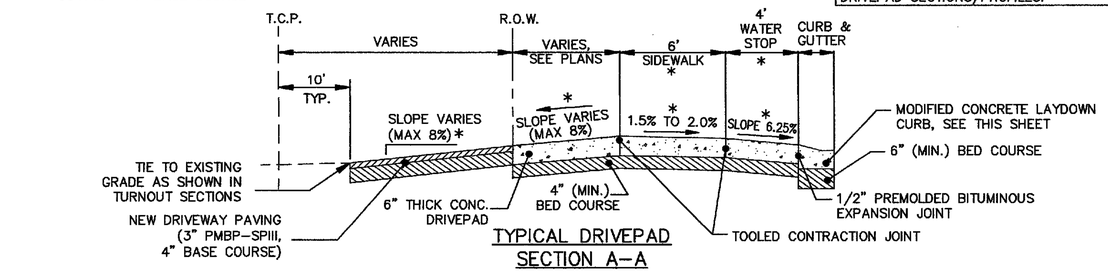

TYPICAL DRIVEPAD SECTION A–A
(SLOPE DOWN TO EXISTING)

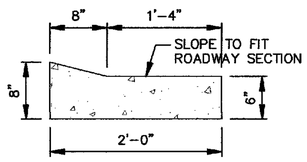

MODIFIED CONCRETE LAYDOWN CURB TYPE "E"

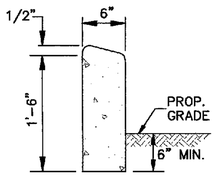

HEADER CURB

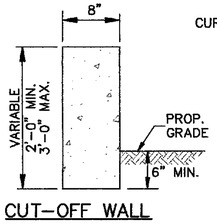

CUT–OFF WALL

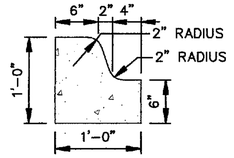

MODIFIED CONCRETE BARRIER CURB & GUTTER TYPE "D" 6"X12"

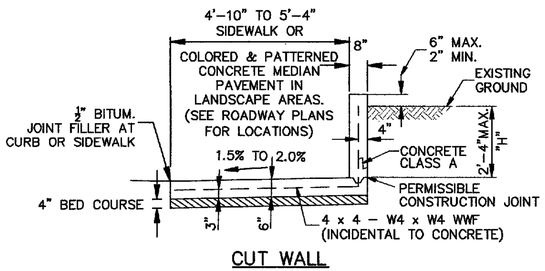

CUT WALL

CUT WALL NOTES:
1. PROVIDE SIDEWALK CONTRACTION JOINTS IN WALL AND SIDEWALK/MEDIAN PAVEMENT @ 5'–0" O.C..
2. WALL SHALL BE PAID UNDER ITEM NO. 511000, STRUCTURAL CONCRETE, CLASS A. THE COST SHALL INCLUDE EXCAVATION, COMPACTION, BACKFILL AND WELDED WIRE FABRIC.
3. SEE SECTION 12 LANDSCAPE PLANS FOR COLORED CONCRETE MEDIAN PAVEMENT DETAILS.

GENERAL NOTES – MISCELLANEOUS DRIVEPAD AND CURB DETAILS

1. CONCRETE SHALL BE STRUCTURAL CONCRETE CLASS "A".
2. END OF DAY'S POUR, 30 MINUTE INTERRUPTIONS, COLD JOINTS AND DROP INLETS SHALL DETERMINE THE LOCATION OF A CONSTRUCTION JOINT. A 3/4" PREMOLDED BITUMINOUS JOINT IS REQUIRED.
3. PLACE TRANSVERSE CONSTRUCTION JOINTS AT 4' INTERVALS AND AT THE END OF RADIUS POINTS OR ISLAND NOSES. ON RAMPS WITH A 6' X 6' LANDING, TRANSVERSE CONSTRUCTION JOINTS SHALL BE PLACED AT THE ENDS OF THE LANDING PAD INSTEAD OF AT A 4' INTERVAL.
4. THE COST OF EXCAVATION, BACKFILL, COMPACTION AND PREMOLDED BITUMINOUS EXPANSION JOINTS SHALL BE INCLUDED IN THE UNIT PRICE BID FOR CUT–OFF WALLS.
5. THE SILICONE SEALED JOINTS SHALL BE SEALED AT A 28' SPACING IN ACCORDANCE WITH SECTION 452 OF THE STANDARD SPECIFICATIONS – SEALING AND RESEALING CONCRETE PAVEMENT JOINTS.
6. CURB RAMPS ARE TO BE LOCATED AT CROSSWALK AREAS AS DESIGNATED ON THE PLAN OR AS DIRECTED BY THE PROJECT MANAGER.
7. SURFACE TEXTURE OF CURB RAMP AND BOTTOM 18" OF LANDINGS SHALL BE OBTAINED BY HEAVY BROOMING (TEXTURE DEPTH, 0.035"), TRANSVERSE TO THE SLOPE OF RAMP.
8. SLOPES SHALL BE UNIFORM WITH NO ABRUPT CHANGES IN GRADES. NORMAL GUTTER LINE PROFILE SHALL BE MAINTAINED THROUGH THE AREA OF THE RAMP.
9. CURB RAMPS SHALL BE MEASURED AND PAID AS CONCRETE SIDEWALK, ITEM NO. 608004.
10. CONSTRUCTION OF LAYDOWN CURB FOR CURB RAMPS IS INCIDENTAL TO CURB & GUTTER.
11. CONSTRUCTION OF 4" WIDE HEADER CURB FOR CURB RAMPS IS INCIDENTAL TO RAMP CONSTRUCTION.
12. LAYOUT LINE FOR HEADER CURB; CUT–OFF WALL, CUT–WALL WILL BE LOCATED AT FACE OF CURB/WALL (FACING CL CERRILLOS RD.)

R.O.W. = RIGHT–OF–WAY LINE
T.C.P. = TEMPORARY CONSTRUCTION PERMIT

** SEE CERRILLOS ROAD PHASE IIC FINAL RIGHT–OF–WAY MAPS(NMP NO. S100130) DATED APRIL 4, 2014 FOR ADDITIONAL RIGHT–OF–WAY AND T.C.P. INFORMATION.

PARSONS BRINCKERHOFF

CITY OF SANTA FE	SHEET
NEW MEXICO PROJECT NO.	NO.
CN S100130	2–14

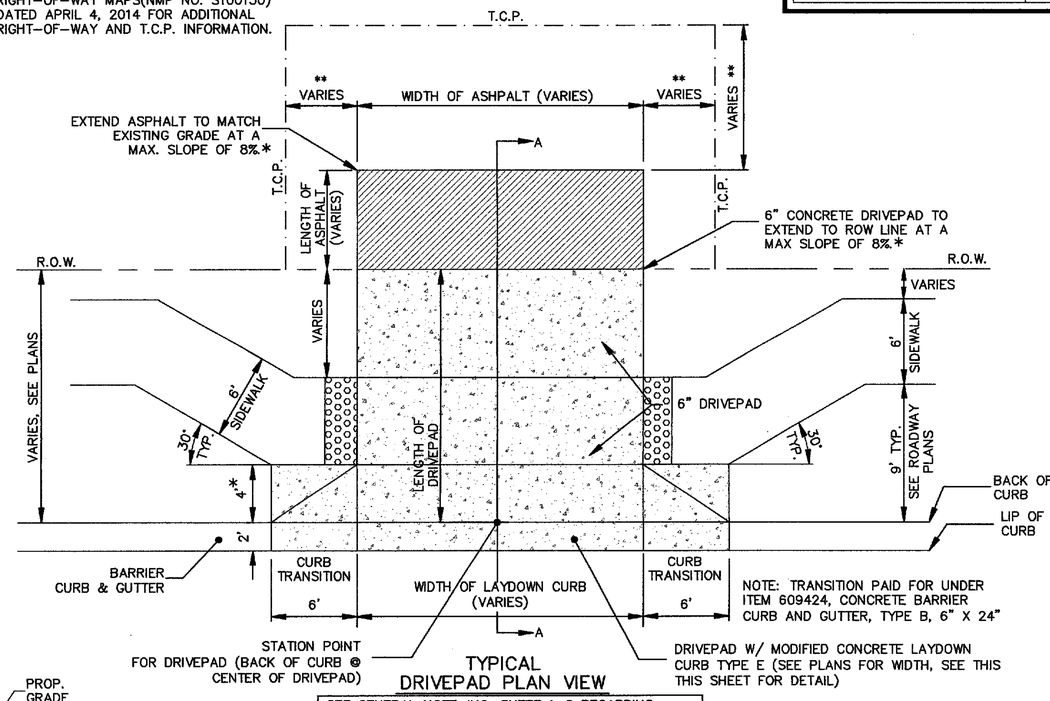

NOTE: TRANSITION PAID FOR UNDER ITEM 609424, CONCRETE BARRIER CURB AND GUTTER, TYPE B, 6" X 24"

TYPICAL DRIVEPAD PLAN VIEW

SEE GENERAL NOTE #49, SHEET 1–9 REGARDING REQUIREMENTS FOR HIGH–EARLY STRENGTH CONCRETE USE AT DRIVEPAD AND VALLEY GUTTER CONSTRUCTION

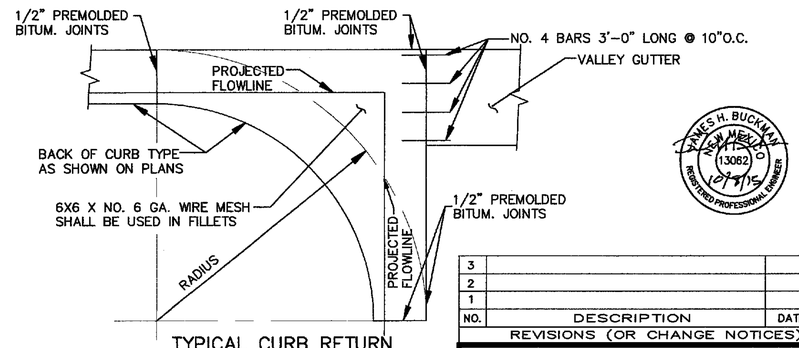

TYPICAL CURB RETURN

NOTE: CONCRETE FILLETS, INCLUDING REINFORCEMENT MESH AND REBAR SHALL BE CONSIDERED INCIDENTAL TO ITEM NO. 609424 CONCRETE BARRIER CURB & GUTTER TYPE B 6"X24". NO SEPARATE MEASUREMENT OR PAYMENT WILL BE MADE THEREFOR.

JAMES H. BUCKMAN NEW MEXICO 13062 12/31/15 REGISTERED PROFESSIONAL ENGINEER

NO.	DESCRIPTION	DATE	BY
3			
2			
1			

REVISIONS (OR CHANGE NOTICES)

SCALE
NOT TO SCALE

DESIGNED BY: PB	DRAWN BY: PB	CHECKED BY: JB
DATE: 08/07/15	DATE: 08/07/15	DATE: 08/07/15

CITY OF SANTA FE

CERRILLOS ROAD PHASE IIC
CAMINO CARLOS REY TO
LLANO STREET
SANTA FE COUNTY

MISCELLANEOUS
DRIVEPAD AND CURB DETAILS

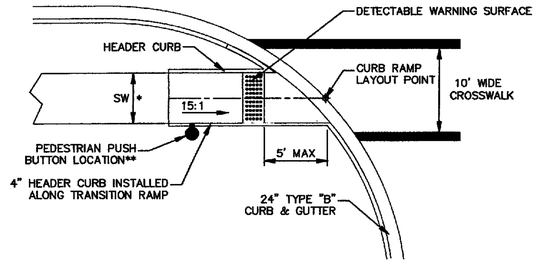

TYPE IA
NTS

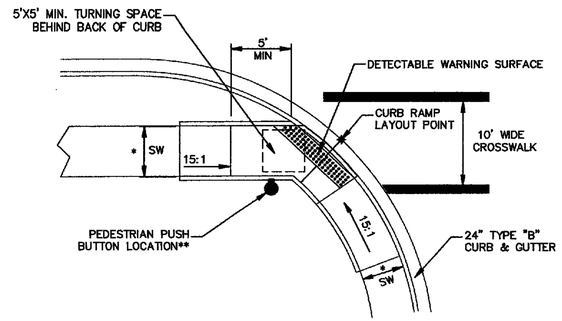

TYPE II
NTS

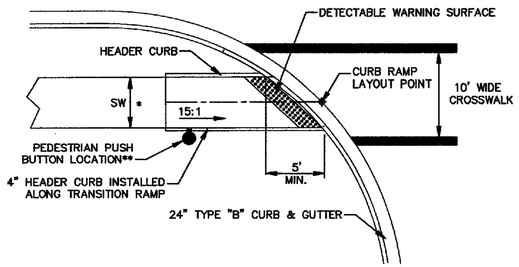

TYPE IB
NTS

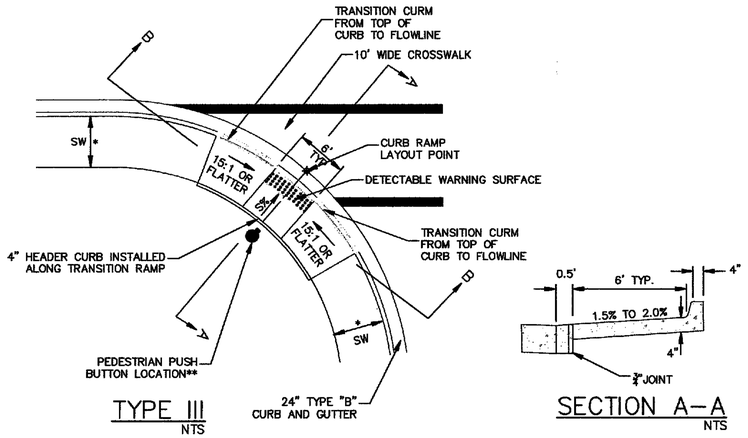

TYPE III
NTS

SECTION A–A
NTS

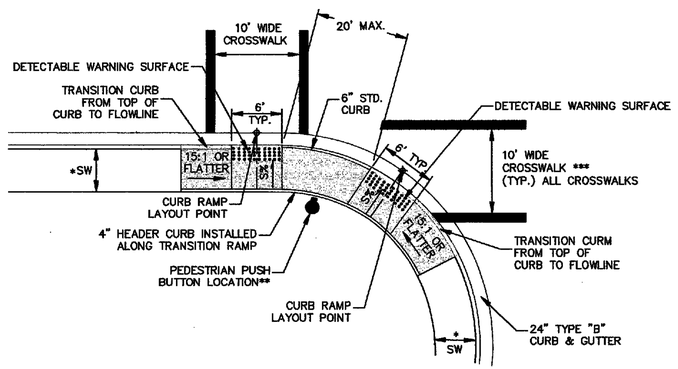

TYPE IV
NTS

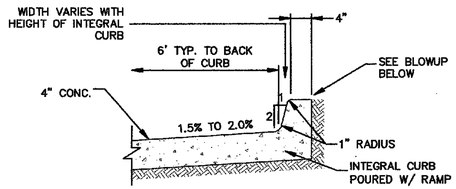

ALTERNATE SECTION A–A
NTS

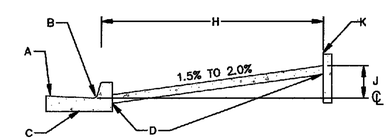

STANDARD CURB & GUTTER
NTS

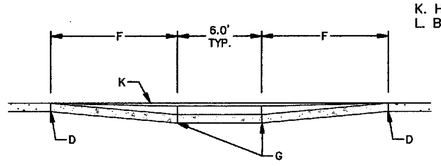

SECTION B–B
NTS

LEGEND

- * SEE SECTION 3 ROADWAY LAYOUT PLANS FOR WIDTH.
- ** SEE SECTION 9 FOR FINAL PEDESTRIAN PUSH BUTTON LOCATION.
- *** SEE SECTION 7 SIGNING AND STRIPING PLANS FOR LAYOUT AND DETAILS.
- ◆ CURB RAMP LAYOUT POINT AT MIDDLE OF RAMP ALONG LIP OF CURB AND GUTTER.
- SW SIDEWALK
- S% 1.5% TO 2.0%, SEE NOTE 16, THIS SHEET.

CURB ACCESS RAMP DETAIL (TYPE III)

PARSONS BRINCKERHOFF

CITY OF SANTA FE	SHEET
NEW MEXICO PROJECT NO.	NO.
CN S100130	2–15

GENERAL NOTES

1. CONSTRUCT SIDEWALKS, CURB RAMPS, AND DETECTABLE WARNINGS IN ACCORDANCE WITH PROWAG GUIDELINES.
2. WORKMANSHIP AND MATERIALS SHALL CONFORM TO NEW MEXICO DEPARTMENT OF TRANSPORTATION STANDARD SPECIFICATIONS FOR ROAD AND BRIDGE CONSTRUCTION, 2014–EDITION, SUPPLEMENTAL SPECIFICATIONS AND SPECIAL PROVISIONS.
3. CONCRETE SHALL BE STRUCTURAL CONCRETE CLASS "A".
4. END OF DAY'S POUR, 30 MINUTE INTERRUPTIONS, COLD JOINTS AND DROP INLETS SHALL DETERMINE THE LOCATION OF A CONSTRUCTION JOINT. A 3/4" PREMOLDED BITUMINOUS JOINT IS REQUIRED.
5. PLACE TRANSVERSE CONSTRUCTION JOINTS AT 4' INTERVALS AND AT THE END OF RADIUS POINTS OR ISLAND NOSES. ON RAMPS WITH A 6' X 6' LANDING, TRANSVERSE CONSTRUCTION JOINTS SHALL BE PLACED AT THE ENDS OF THE LANDING PAD INSTEAD OF AT A 4' INTERVAL.
6. EXCAVATION AND PREMOLDED BITUMINOUS EXPANSION JOINTS TO BE INCLUDED IN THE COST OF CURB RAMPS.
7. CURB RAMPS ARE TO BE LOCATED AT CROSSWALK AREAS AS DESIGNATED ON THE PLAN OR AS DIRECTED BY THE PROJECT MANAGER.
8. SURFACE TEXTURE OF CURB RAMP AND BOTTOM 18" OF LANDINGS SHALL BE OBTAINED BY HEAVY BROOMING (TEXTURE DEPTH, 0.035"), TRANSVERSE TO THE SLOPE OF RAMP.
9. SLOPES SHALL BE UNIFORM WITH NO ABRUPT CHANGES IN GRADES. NORMAL GUTTER LINE PROFILE SHALL BE MAINTAINED THROUGH THE AREA OF THE RAMP.
10. CURB RAMPS SHALL BE MEASURED AND PAID AS CONCRETE SIDEWALK, ITEM NO. 608004.
11. CONSTRUCTION OF LAYDOWN CURB FOR CURB RAMPS IS INCIDENTAL TO CURB & GUTTER.
12. CONSTRUCTION OF 4" HEADER CURB FOR CURB RAMPS IS INCIDENTAL TO RAMP CONSTRUCTION.
13. CONSTRUCTION OF THE DETECTABLE WARNING SURFACE IS INCIDENTAL TO THE RAMP CONSTRUCTION.
14. CURB RAMPS SHALL MATCH SIDEWALK WIDTH, 4' MIN. SEE PLANS SECTION 3.
15. SIDEWALK CROSS SLOPES SHALL NOT EXCEED 2%.
16. LANDING AREAS SHALL BE CONSTRUCTED AT 1.5% TO 2.0% (NOT TO EXCEED 2% IN ANY DIRECTION).
17. RAMP RUNNING SLOPE SHALL NOT EXCEED 15:1.
18. ELEVATIONS PROVIDED IN PLANS AT BACK OF SIDEWALK OR CURB RAMP ARE BASED ON A 2.0% CALCULATION. CROSS SLOPES SHALL BE CONSTRUCTED AT 1.5% TO 2.0%.
19. REFER TO NMDOT PEDESTRIAN ACCESS DETAILS FOR DETECTABLE WARNING SURFACE NOTES AND DETAILS.

CONSTRUCTION NOTES

A. SLOPE OF GUTTER DEPENDENT ON REQUIREMENTS FOR VALLEY GUTTER.
B. TRANSITION SHALL BE SMOOTH WITHOUT A LIP.
C. CURB AND GUTTER
D. EXPANSION JOINT.
E. RADIAL LINES – TOP AND BOTTOM OF RAMP.
F. DISTANCE REQUIRED TO MAINTAIN A SLOPE NO STEEPER THAN 15:1 (H:V).
G. CONTRACTION JOINT
H. VARIES WITH AVAILABLE ROW
J. VARIABLE
K. HEADER CURB (INCIDENTAL TO SIDEWALK)
L. BACK OF SIDEWALK

NO.	DESCRIPTION	DATE	BY
3			
2			
1			

REVISIONS (OR CHANGE NOTICES)

JAMES H. BUCKHAM NEW MEXICO 13062 REGISTERED PROFESSIONAL ENGINEER 12/9/15

CITY OF SANTA FE

CERRILLOS ROAD PHASE IIC
CAMINO CARLOS REY TO
LLANO STREET
SANTA FE COUNTY

CURB RAMP DETAILS

SCALE
NOT TO SCALE

DESIGNED BY: PB	DRAWN BY: PB	CHECKED BY: JB
DATE: 08/07/15	DATE: 08/07/15	DATE: 08/07/15

Bohannan ▲ Huston INC.
Courtyard I 7500 Jefferson St. NE Albuquerque, NM 87109-4335
ENGINEERING ▲ SPATIAL DATA ▲ ADVANCED TECHNOLOGIES

CITY OF SANTA FE	SHEET NO.
NEW MEXICO PROJECT NO.	
CN S100130	2–16

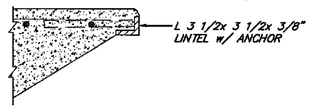

A INLET LINTEL ANGLE

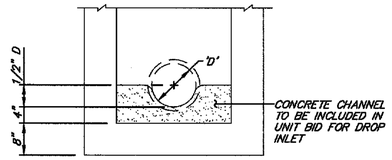

SPECIAL FLOOR DETAIL

REBAR SCHEDULE
FOR MODIFIED TYPE 1 OR 2, –B & –F

LABEL	SIZE	SHAPE	PATTERN
B1, F1	#4	4'–6"	@ 13" O.C.
B2, F2	#4	8" VARIES	@ 13" O.C.
B3, F3	#4	8" 4'–4" 8"	@ 13" O.C.
B4, F4	#4	8" 1'–6" MIN. 8"	@ 13" O.C.
B5, F5	#4	2'–10" MAX. 1'–5"	@ 13" O.C.
B6, F6	#4	VARIES 8"	@ 13" O.C.
B7, F7	#4	2'–7" 8"	@ 13" O.C.
B8, F8	#4	8" 1'–5"	@ 13" O.C.

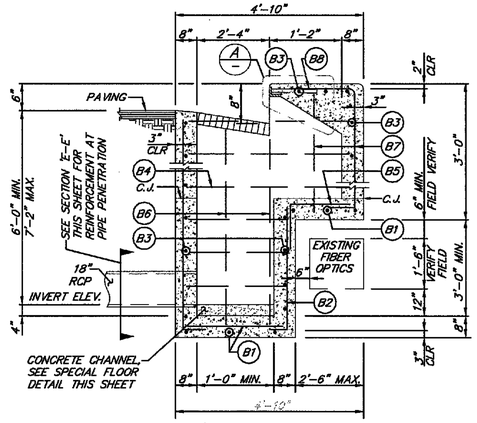

MODIFIED TYPE 1 OR 2, –B

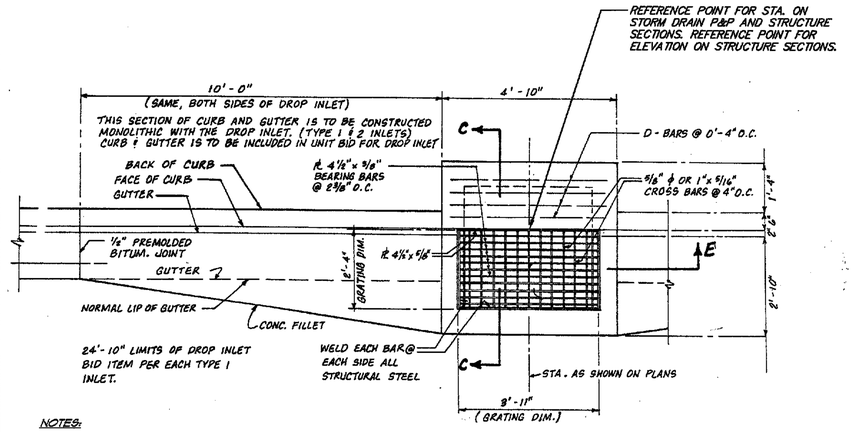

TYPE - 1 INLET PLAN

NOTES:
1. DETAIL ALSO APPLIES TO TYPE 2 INLETS.
2. TEN-FOOT CURB & GUTTER EXTENSIONS SHALL BE MODIFIED AS REQUIRED WHERE CONFLICTS WITH DRIVEPADS EXIST.

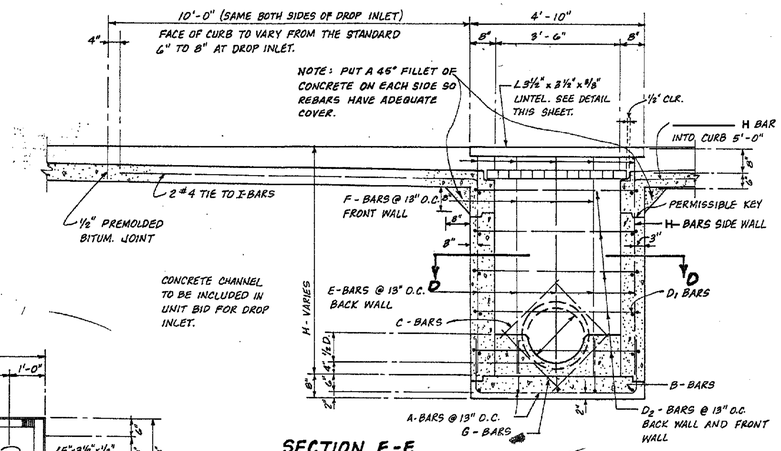

SECTION E-E

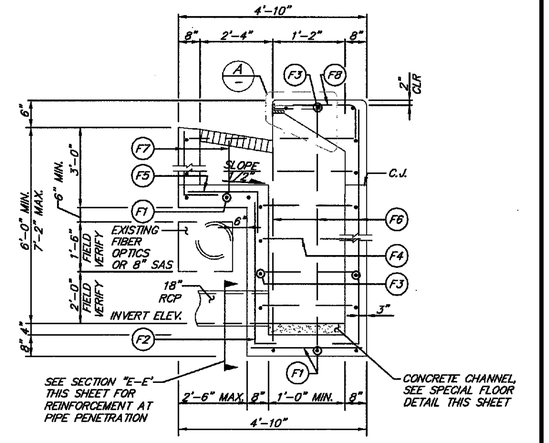

MODIFIED TYPE 1 OR 2, –F

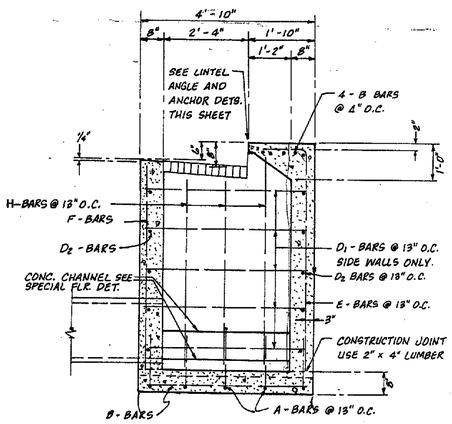

SECTION C-C

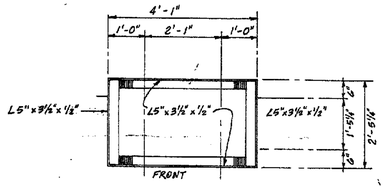

GRATING FRAME DETAIL

RE - BAR SCHEDULE

BAR TYPE	SIZE & SHAPE	BAR No.	BAR TYPE & QUANTITY
A	R 1½" 4'-6" 8'-6"	#4	TYPE -1 - 8 REQUIRED TYPE -2 - 12 REQUIRED TYPE -2 - 6 REQUIRED
B	4'-6" 8'-6"	#4	TYPE -1 - 6 REQUIRED TYPE -2 - 6 REQUIRED
C	3'-6"	#4	TYPE-1-2 REQ'D PER OUTLET TYPE-2-2 REQ'D PER OUTLET
D_1	4'-6"	#4	TYPE-1-2 REQ'D PER FT. HT. TYPE-2-2 REQ'D PER FT. HT.
D_2	VAR. 2'-6" 8'-6"	#4	TYPE-1-2 REQ'D PER 13" HT. TYPE-2-2 REQ'D PER 13" HT.
E	"H" LEGS 0'-4"	#4	TYPE-1-6 REQUIRED TYPE-2-9 REQUIRED
F	"H" LEGS 0'-8"	#4	TYPE-1-3 REQUIRED TYPE-2-7 REQUIRED
G	3'-6"	#4	TYPE-1-2 REQ'D. PER OUTLET TYPE-2-2 REQ'D. PER OUTLET
H	VAR. "H" LEGS 0'-11"	#4	TYPE-1-8 REQ'D -------- TYPE-2-8 REQ'D INTO CURB

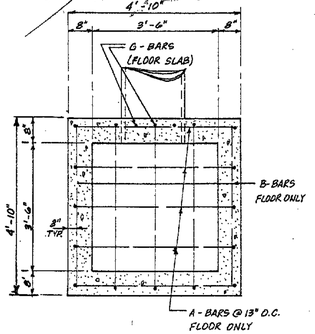

SECTION D-D

GENERAL NOTES:
1. CURB DROP INLETS AND MODIFIED CURB DROP INLETS SHALL BE PAID UNDER ITEM No. 623341871
2. CONTRACTOR SHALL VERIFY UTILITY LOCATION IN FIELD AND DETERMINE TYPE OF INLET TO CONSTRUCT WITH APPROVAL OF THE PROJECT MANAGER

NO.	DESCRIPTION	DATE	BY
3			
2			
1			

REVISIONS (OR CHANGE NOTICES)

ALEJANDRO ETLANTUS NEW MEXICO 19985 PROFESSIONAL ENGINEER

CITY OF SANTA FE

CERRILLOS ROAD PHASE IIC
CAMINO CARLOS REY TO
LLANO STREET
SANTA FE COUNTY

MODIFIED INLET DETAILS

SCALE

DESIGNED BY:	DRAWN BY:	CHECKED BY:
DATE:	DATE:	DATE:

N.M. PROJECT NO. CN S100130 SHEET NO. 2–16

Thu, 1-Oct-2015 - 1:15:pm, Plotted by: LMENDEZ
P:\2014\141138\WP\Design\Plans\Phase IIC\141138_03_MOD1.dwg

Bohannan ▲ Huston Inc.
Courtyard I 7500 Jefferson St. NE Albuquerque, NM 87109-4335
ENGINEERING ▲ SPATIAL DATA ▲ ADVANCED TECHNOLOGIES

CITY OF SANTA FE	SHEET
NEW MEXICO PROJECT NO.	NO.
CN S100130	2-17

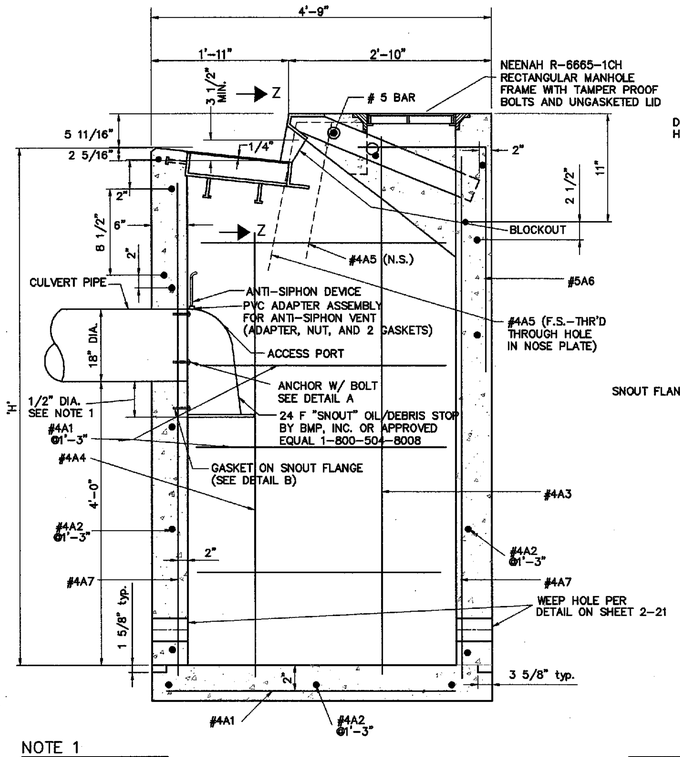

NOTE 1

INSTALLATION NOTE:
POSITION HOOD SO THAT BOTTOM FLANGE OF SNOUT IS 1/2 THE PIPE DIAMETER BELOW THE BOTTOM OF THE PIPE FOR PIPES > 12" ID. FOR PIPES < 10" ID. PLACE SNOUT 6" (MIN.) BELOW BOTTOM OF PIPE.

MODIFIED TYPE "B" INLET
SECTION VIEW
SCALE: 1" = 1'

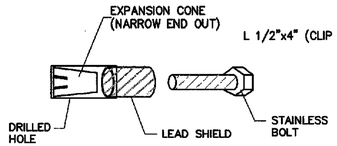

DETAIL A
NOT TO SCALE

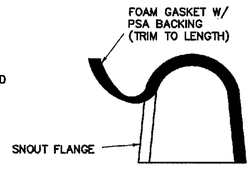

DETAIL B
NOT TO SCALE

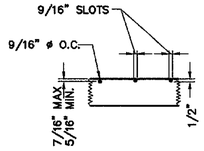

DETAIL X
(ALTERNATE METHODS)
NOT TO SCALE

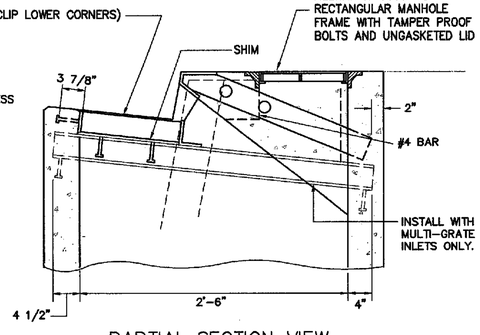

PARTIAL SECTION VIEW
N.T.S.

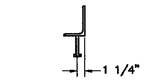

SECTION B-B
SCALE 1" = 1'

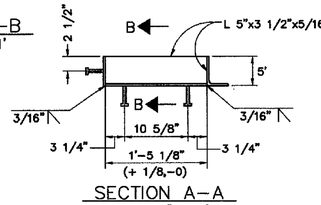

SECTION A-A
SCALE 1" = 1'

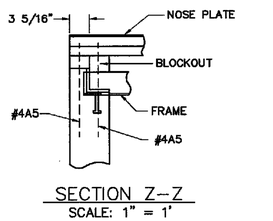

SECTION Z-Z
SCALE: 1" = 1'

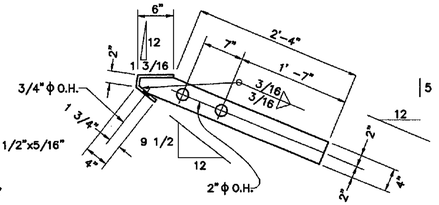

SECTION D-D
SCALE: 1" = 1'

GENERAL NOTES

1. USE THIS DRAWING IN LIEU OF SERIAL BDIC-004 WHEN CALLED FOR ON THE CONTRACT DRAWINGS.
2. ALL CONCRETE TO BE CLASS "A". DESIGN IS BASED ON A MINIMUM COMPRESSIVE STRENGTH OF 3,000 PSI AT 28 DAYS. CHAMFER ALL EXPOSED EDGES 3/4 INCH.
3. REINFORCING STEEL TO AASHTO M-31, GRADE 60. ALL DIMENSIONS REFER TO THE CENTERLINE OF BARS.
4. STRUCTURAL STEEL TO BE CARBON STEEL CONFORMING TO AASHTO M-183.
5. PAINT ALL STRUCTURAL STEEL MEMBERS IN CONFORMANCE WITH SECTION 545-PROTECTIVE COATING OF MISCELLANEOUS STRUCTURAL STEEL-OF THE NEW MEXICO STANDARD SPECIFICATIONS FOR HIGHWAY AND BRIDGE CONSTRUCTION. WELDED STUD BOLTS AND SURFACES TO BE EMBEDDED IN CONCRETE SHALL BE COATED.
6. STRUCTURAL STEEL MEMBERS MAY BE HOT-DIPPED GALVANIZED AFTER FABRICATION IN CONFORMANCE WITH AASHTO M-11 AT THE CONTRACTORS OPTION.
7. SEE ROADWAY PLANS FOR LOCATION OF DROP INLETS, NUMBERS, TYPE, SIZE AND CENTERLINE ELEVATIONS OF PIPE DRAINS.
8. INSTALL ACCESS MANHOLE LID AT MIDPOINT ALONG THE LONG AXIS,
9. "SNOUT" OIL/DEBRIS STOP IS INCIDENTAL TO INLET.

DESIGN DATA

DESIGN ACCORDING TO AASHTO SPECIFICATIONS, 1979
DESIGN STRESSES: fc = 1200 PSI, fs = 20,000 PSI, N = 10
HORIZONTAL EARTH PRESSURE = 36#/CU.FT. EQUIV. FLUID PRESSURE WITH 2' SURCHARGE
LIVE LOAD ON GRATING = ONE 16,000# WHEEL PLUS 30% IMPACT.
MAXIMUM "H" = 11'-6"

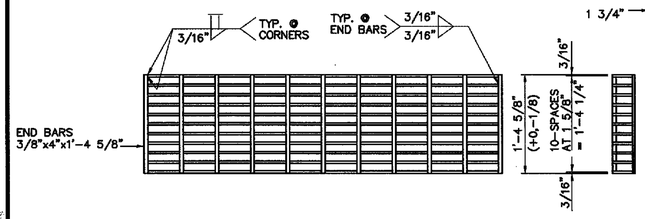

MODIFIED TYPE "B" GRATING DETAIL
SCALE 1" = 1'

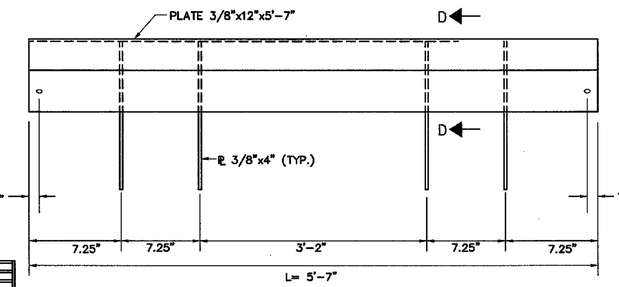

MODIFIED NOSE PLATE DETAIL
PLAN VIEW
N.T.S.

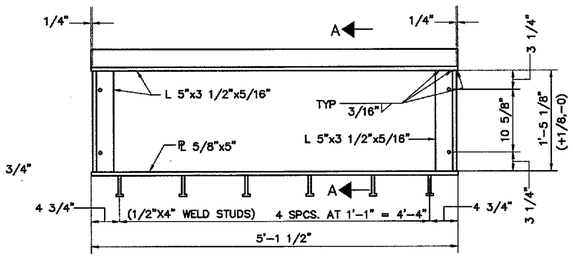

MODIFIED TYPE "B" ANGLE FRAME DETAIL (TYPE 1)
SCALE 1" = 1'

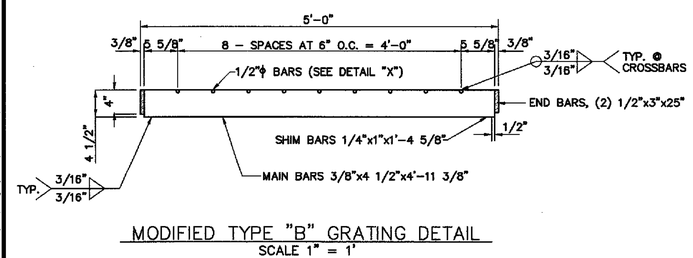

MODIFIED TYPE "B" GRATING DETAIL
SCALE 1" = 1'

REINFORCING BAR SCHEDULE

EMBED THIS LEG IN WALL — R= 3 BAR DIAMETERS

#4A5	1'-2"	X 2'-3" LONG REQ'D: 4
#5A6	1'-2"	X 3'-9" LONG REQ'D: 2L MINUS 1.2

#4A1	3'-3"	REQ'D: L MINUS 0.60 PLUS 1.60H
#4A2	L MINUS 3"	REQ'D: 9 PLUS 1.60H
#4A3	H MINUS 11"	REQ'D: 2
#4A4	H	REQ'D: 2

H	SPA.	#4A7	
8'-1" TO 11'-6"	4 1/2"	H PLUS 6"	REQ'D: (3.0L MINUS 3.8) 2

NOTE:
"H" AND "L" ARE IN FEET. FURNISH BARS TO THE NEAREST WHOLE NUMBER OF BARS. FOR #4A7 COMPUTE NEAREST WHOLE NUMBER BEFORE MULTIPLYING BY 2.

NO.	DESCRIPTION	DATE	BY
3			
2			
1			

REVISIONS (OR CHANGE NOTICES)

ALANREN ETLANTUS
NEW MEXICO
19985
PROFESSIONAL ENGINEER

CITY OF SANTA FE

CERRILLOS ROAD PHASE IIC
CAMINO CARLOS REY TO
LLANO STREET
SANTA FE COUNTY

MISCELLANEOUS DETAILS

SCALE

DESIGNED BY: K.S.L.	DRAWN BY: L.S.M.	CHECKED BY: A.E.
DATE: 08.10.15	DATE: 08.10.15	DATE: 08.10.15

N.M. PROJECT NO. CN S100130 SHEET NO. 2-17

Thu, 1-Oct-2015 - 1:15pm Plotted By: LMNOB:/
P:\2014\2158\WK\Design\plans\Phase IIC\20140158_04_Snout-Inlet2.dwg

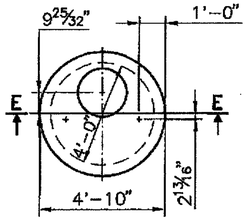

4'-0" INSIDE DIM. MANHOLE

TOP SLAB PLAN

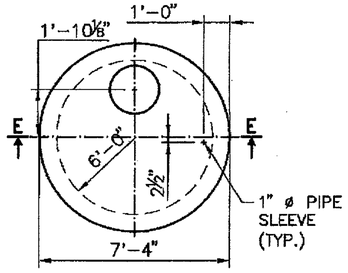

6'-0" INSIDE DIM. MANHOLE

TOP SLAB PLAN

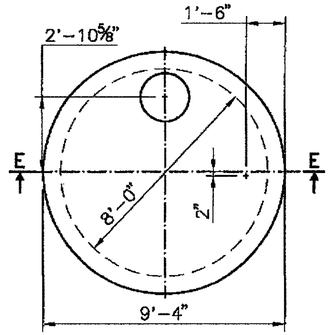

8'-0" INSIDE DIM. MANHOLE

TOP SLAB PLAN

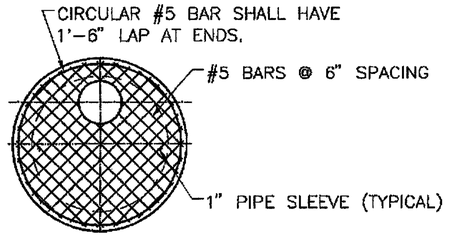

TOP & BOTTOM MAT DETAIL

SECTION F-F

NOTE: ADD 5" AROUND OPENING AT 3" O.C. FOR FIRST 12" FROM OPENING.

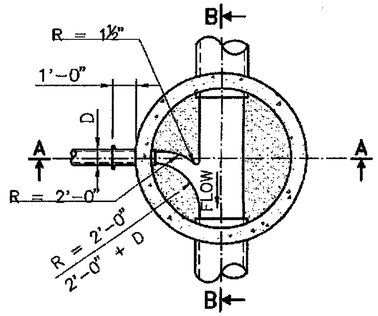

PLAN AT C-C

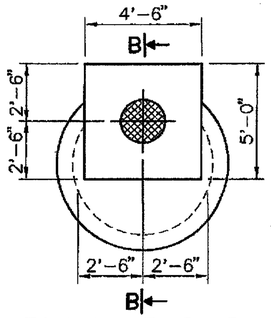

PLAN AT D-D

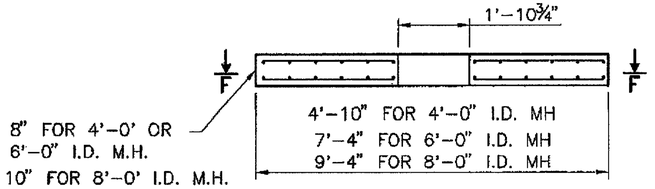

TOP SLAB

SECTION E-E

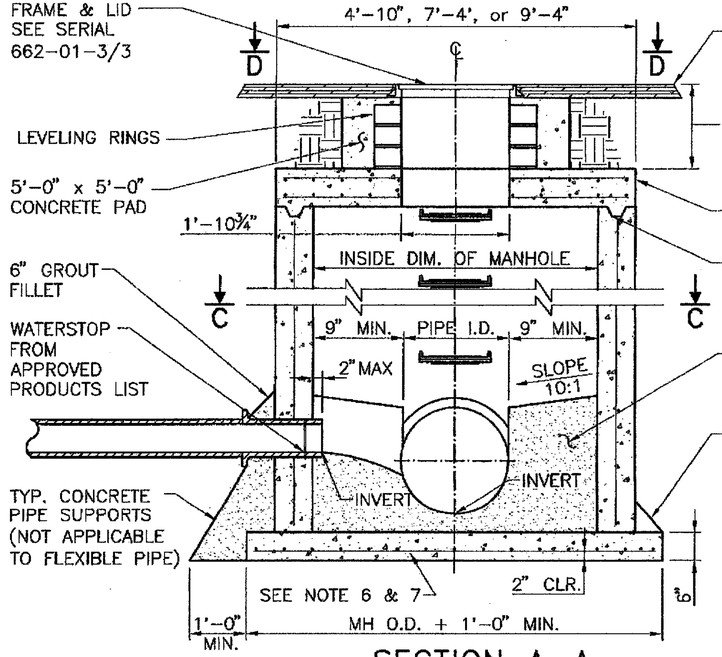

SECTION A-A

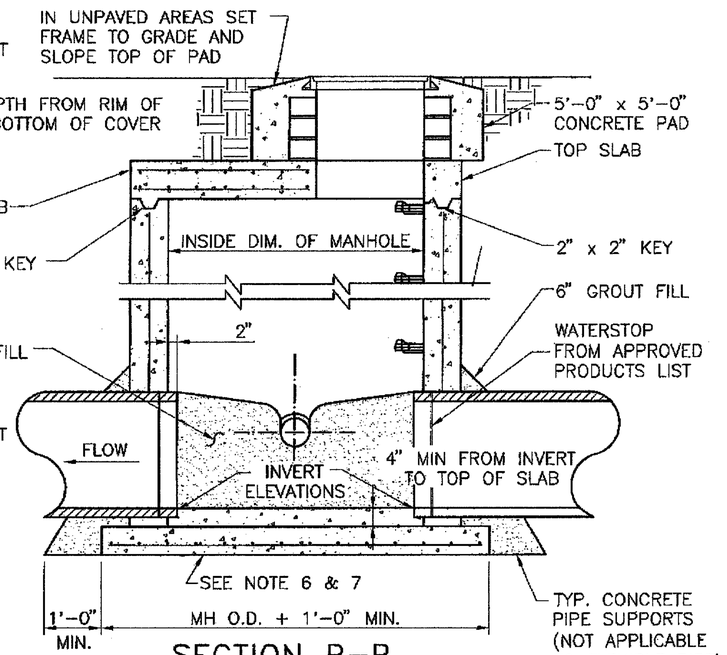

SECTION B-B

GENERAL NOTES:

1. DESIGN SHOWN ON THIS DRAWING APPLIES TO 4'-0", 6'-0" AND 8'-0" INSIDE DIMENSION MANHOLES ONLY
2. USE NON-SHRINK GROUT FOR FILLETS, PENETRATIONS AND FILL.
3. COMPACT ALL BACKFILL AROUND AND UNDER MANHOLE TO 95% OF MAXIMUM DENSITY.
4. POSITION MANHOLE OPENING OVER THE UPSTREAM SIDE OF MAIN LINE.
5. USE APPROVED MASTIC OR RUBBER JOINT MATERIAL FOR ALL JOINTS.
6. BOTTOM OF SLAB MAY BE POURED IN PLACE USING #5 BARS AT 6" O.C. EACH WAY FOR MANHOLE DEPTH OF 16'-0' OR GREATER, #5 BARS AT 1'-0" O.C. EACH WAY FOR MANHOLE DEPTH LESS THAN 16'-0". IF ANY PART OF THE RISER IS POURED IN PLACE, THE WALL THICKNESS SHALL BE 1 FOOT THICK MINIMUM AND HAVE #5 BARS AT 1'-0" ON CENTER EACH WAY FOR DEPTHS OF LESS THAN 16 FEET, #5 BARS AT 6" ON CENTER EACH WAY FOR DEPTHS GREATER THAN 16 FEET. THE DEPTH OF CAST-IN-PLACE CONCRETE OVER THE PIPES SHALL BE 1 FOOT MINIMUM.
7. ALL CONCRETE SHALL BE CLASS "AA."
8. FOR FRAME AND LID SEE SERIAL 662-01-3/3.
9. CONCRETE PIPE SUPPORTS SHALL EXTEND OUTSIDE OF MANHOLE TO BELL OF FIRST JOINT AND SHALL CRADLE PIPE TO SPRING LINE NOT APPLICABLE TO FLEXIBLE PIPE.
10. USE 1" OR 2" PRECAST RINGS ON UNPAVED STREET FOR FUTURE ADJUSTMENT OF MANHOLE FRAME TO PAVEMENT GRADE. PLASTER INSIDE WITH 1/2" MORTAR.
11. REBAR AND CLASS "A" CONCRETE ARE INCIDENTAL TO THE MANHOLE.
12. ALL PRECAST SECTIONS OF MANHOLE SHALL BE IN CONFORMANCE WITH ASTM C-478, EXCEPT THAT THE MINIMUM THICKNESS AND THE REINFORCEMENT SHALL BE AS INDICATED IN THE CONTRACT.
13. THE USAGE, DESIGNING AND DETAILING OF THE REINFORCEMENT OF THE PRECAST SECTIONS OF MANHOLE SHALL BE IN CONFORMANCE WITH ASTM C-478, IF THE REINFORCEMENT OF THE PRECAST SECTIONS OF MANHOLE IS NOT INDICATED IN THE CONTRACT.
14. THE MINIMUM COMPRESSIVE STRENGTH OF THE CONCRETE IN THE MANHOLE BASE, RISER AND TOP SECTION SHALL BE 4000 PSI (CLASS "AA") AT 28 DAYS AS REQUIRED BY ASTM C-478.
15. WORKMANSHIP AND MATERIALS SHALL CONFORM TO THE NEW MEXICO DEPARTMENT OF TRANSPORTATION'S (NMDOT'S) STANDARD SPECIFICATIONS FOR HIGHWAY AND BRIDGE CONSTRUCTION CURRENT EDITION, SUPPLEMENTAL SPECIFICATIONS AND SPECIAL PROVISIONS.

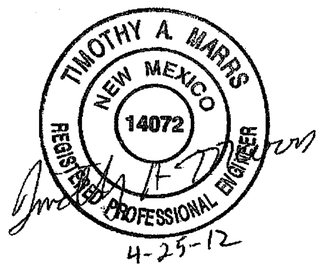

	DATE	BY	DESCRIPTION

REVISIONS (OR CHANGE NOTICES)

NEW MEXICO DEPARTMENT OF TRANSPORTATION STANDARD DRAWING

PRECAST CONCRETE MANHOLE
TYPE "C"
FOR
STORM DRAINS

DESIGNED BY: DRAWN BY: SKL CHECKED BY: YML/TM

662-01-1/3 1 of 1

2-18

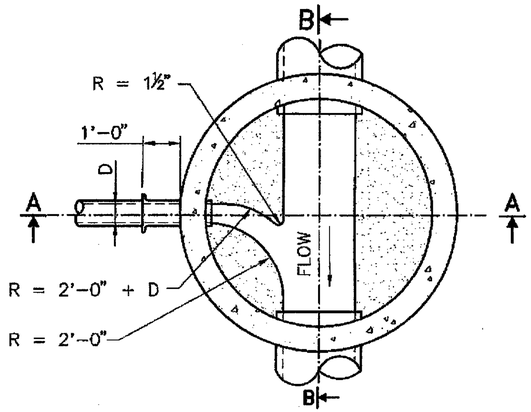

PLAN AT C-C

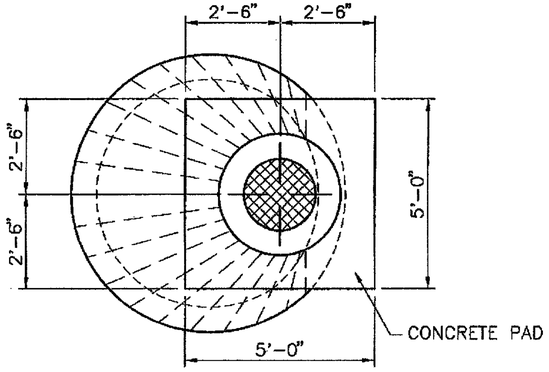

PLAN AT D-D

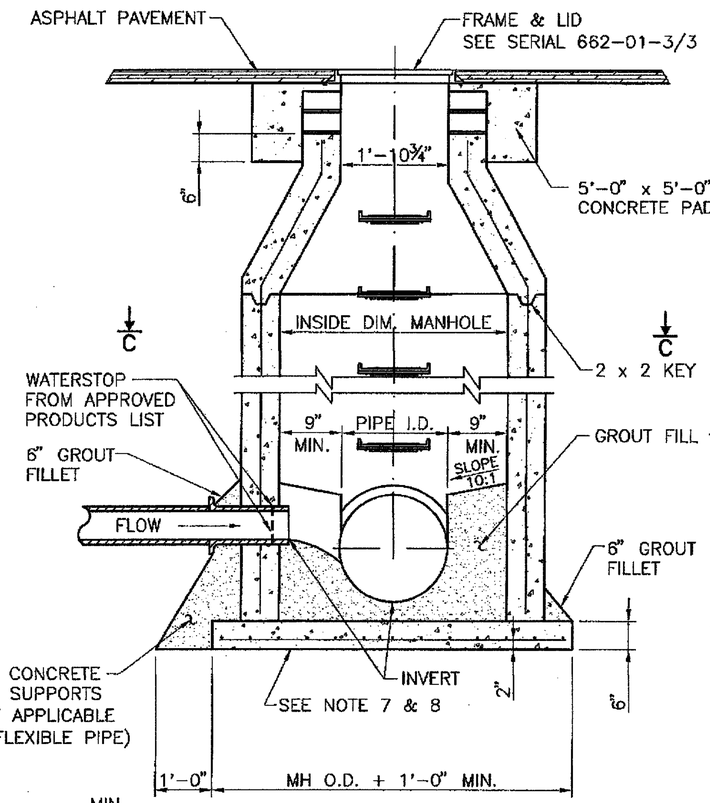

SECTION A-A

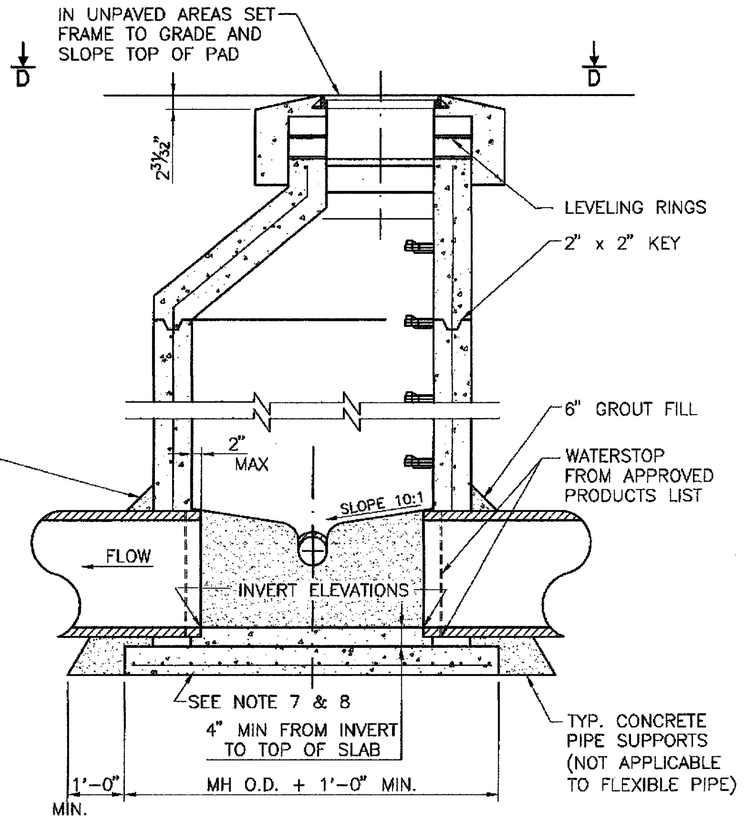

SECTION B-B

GENERAL NOTES:

1. DESIGN SHOWN ON THIS DRAWING APPLIES TO 4'-0" AND 6'-0" INSIDE DIMENSION ONLY.
2. USE TYPE "E" FOR MANHOLE DEPTHS OF EQUAL TO AND GREATER THAN 6'-0" MEASURED FROM INVERT TO RIM. USE TYPE "C" FOR MANHOLES LESS THAN 6 FEET IN DEPTH.
3. USE NON-SHRINK GROUT FOR FILLETS, PENETRATIONS AND FILL.
4. COMPACT ALL BACKFILL AROUND AND UNDER MANHOLE TO 95% OF MAXIMUM DENSITY.
5. POSITION MANHOLE OPENING OVER THE UPSTREAM SIDE OF MAIN LINE.
6. USE APPROVED MASTIC OR RUBBER JOINT MATERIAL FOR ALL JOINTS.
7. BOTTOM OF SLAB MAY BE POURED IN PLACE USING #5 BARS AT 6" O.C. EACH WAY FOR MANHOLE DEPTH OF 16'-0' OR GREATER, #5 BARS AT 1'-0" O.C. EACH WAY FOR MANHOLE DEPTH LESS THAN 16'-0". IF ANY PART OF THE RISER IS POURED IN PLACE, THE WALL THICKNESS SHALL BE 1 FOOT THICK MINIMUM AND HAVE #5 BARS AT 1'-0" ON CENTER EACH WAY FOR DEPTHS OF LESS THAN 16 FEET, #5 BARS AT 6" ON CENTER EACH WAY FOR DEPTHS GREATER THAN 16 FEET. THE DEPTH OF CAST-IN-PLACE CONCRETE OVER THE PIPES SHALL BE 1 FOOT MINIMUM.
8. ALL CONCRETE SHALL BE CLASS "AA."
9. PREFABRICATED METAL AND HDPE MANHOLES CAN BE USED AS AN ALTERNATE, WITH THE APPROVAL OF THE PROJECT MANAGER.
10. ALL PRECAST SECTIONS OF MANHOLE SHALL BE IN CONFORMANCE WITH ASTM C-478, EXCEPT THAT THE MINIMUM THICKNESS AND THE REINFORCEMENT SHALL BE AS INDICATED IN THE CONTRACT.
11. THE USAGE, DESIGNING AND DETAILING OF THE REINFORCEMENT OF THE PRECAST SECTIONS OF MANHOLE SHALL BE IN CONFORMANCE WITH ASTM C-478, IF THE REINFORCEMENT OF THE PRECAST SECTIONS OF MANHOLE IS NOT INDICATED IN THE CONTRACT.
12. THE MINIMUM COMPRESSIVE STRENGTH OF THE CONCRETE IN THE MANHOLE BASE, RISER AND TOP SECTION SHALL BE 4000 PSI (CLASS "AA") AT 28 DAYS AS REQUIRED BY ASTM C-478.
15. WORKMANSHIP AND MATERIALS SHALL CONFORM TO THE NEW MEXICO DEPARTMENT OF TRANSPORTATION'S (NMDOT'S) STANDARD SPECIFICATIONS FOR HIGHWAY AND BRIDGE CONSTRUCTION CURRENT EDITION, SUPPLEMENTAL SPECIFICATIONS AND SPECIAL PROVISIONS.

	DATE	BY	DESCRIPTION

REVISIONS (OR CHANGE NOTICES)

NEW MEXICO DEPARTMENT OF TRANSPORTATION STANDARD DRAWING

PRECAST CONCRETE MANHOLE
TYPE "E"
FOR
STORM DRAINS

DESIGNED BY: TM DRAWN BY: SKL CHECKED BY: YML/TM

662-01-2/3 1 of 1

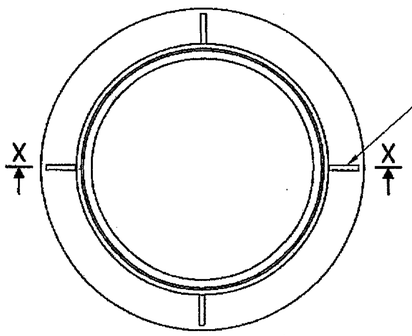

MANHOLE FRAME
PLAN

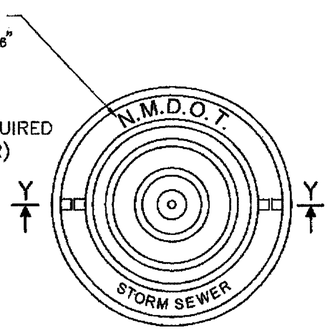

MANHOLE LID
LETTERING PLAN

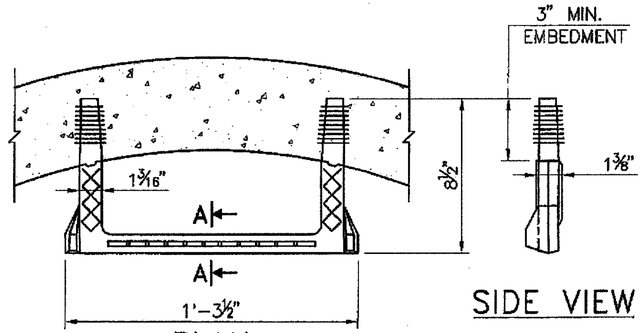

PLAN

SIDE VIEW

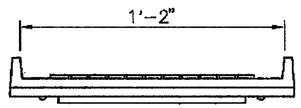

FRONT VIEW

GENERAL NOTES:

1. MONOLITHIC CAST IRON ON STEEL ROD INSERTS.INSERT MUST HAVE 3/16" MINIMUM COVER AND 3" MINIMUM END EMBEDMENT IN CASTING.
2. VERTICAL AND HORIZONTAL LOAD TEST PROCEDURES FOR MANHOLE STEPS SHALL BE IN ACCORDANCE WITH THE METHODS ASTM G497, OTHERWISE THE CERTIFIED TEST RESULTS SHALL BE AVAILABLE FOR VERIFICATION.
3. THE HORIZONTAL PULL OUT LOAD SHALL BE 400 LBS. AND THE VERTICAL LOAD SHALL BE 800 LBS. ACCORDING TO ASTM-G478.
4. THE STEP IS TO BE INSERTED AT THE PRECASTING PLANT, BY PRESSURE, INTO PRECISELY PRE-FORMED TAPERED HOLES IN THE MANHOLE WALL.
5. THE VERTICAL SPACING BETWEEN INSTALLED STEPS SHALL NOT BE MORE THAN 1'-4" INCHES.

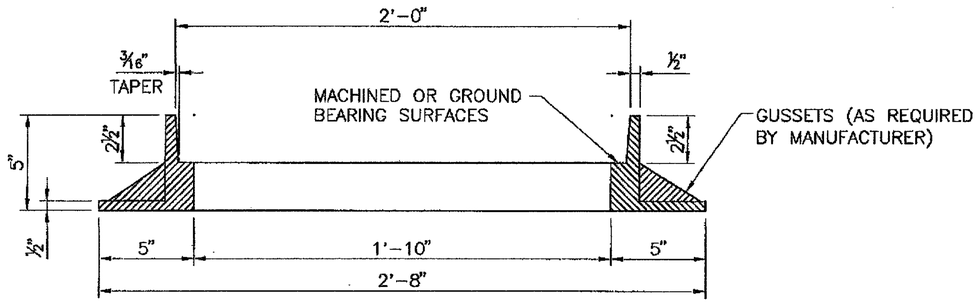

SECTION X-X
FRAME (140 LB. ± 5% TOLERANCE)

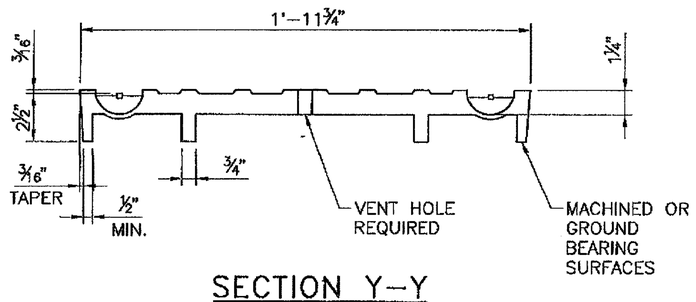

SECTION Y-Y
LID (170 LB. ± 5% TOLERANCE)

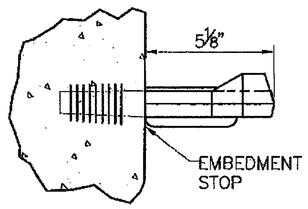

STEP INSTALLATION

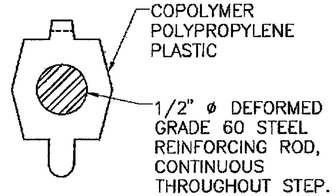

SECTION A-A

	DATE	BY	DESCRIPTION

REVISIONS (OR CHANGE NOTICES)

NEW MEXICO DEPARTMENT OF TRANSPORTATION STANDARD DRAWING

PRECAST CONCRETE MANHOLE FRAME LID DETAILS AND STEP DETAILS

DESIGNED BY: ____ DRAWN BY: SKL CHECKED BY: YML/TM

662-01-3/3 1 of 1

2-20

Bohannan ▲ Huston
Courtyard I 7500 Jefferson St. NE Albuquerque, NM 87109-4335
ENGINEERING ▲ SPATIAL DATA ▲ ADVANCED TECHNOLOGIES

CITY OF SANTA FE	SHEET
NEW MEXICO PROJECT NO.	NO.
CN S100130	2-21

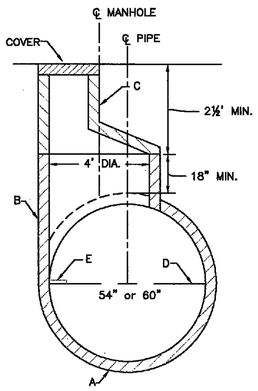

GENERAL NOTES:

1. MANHOLE STEPS ARE REQUIRED FOR MANHOLES DEEPER THAN 6 FEET. LOWEST STEP SHOULD BE AT THE SPRINGLINE OF THE SEWER PIPE.
2. FIELD FABRICATION OF TEE OR ECCENTRIC PIPE UNIT WILL NOT BE ACCEPTED.
3. VERTICAL PIPE SHALL BE CENTERED HORIZONTALLY ON THE STORM SEWER PIPE SECTION.
4. TEE-TYPE MANHOLES SHALL BE MEASURED AND PAID FOR BY THE METHODS DESCRIBED IN NMSSPWC SECTION 920.8.1. MEASUREMENT WILL BE FROM THE INVERT OF THE MAIN LINE TO THE MANHOLE RIM. PAYMENT UNDER THIS ITEM WILL INCLUDE THE NORMAL MANHOLE COSTS DESCRIBED IN THIS SECTION, AS WELL AS ANY ADDITIONAL PIPE COSTS FOR THE PRECAST TEE AND FOR THE CONCRETE CRADLE UNDER THE TEE. PAYMENT WILL BE UNDER ITEM NO. 662070-MANHOLE "T-TYPE".
5. RIM ELEVATIONS GIVEN ON STRUCTURE SECTION SHEETS TAKEN AT PIPE CENTERLINE, NOT MANHOLE CENTERLINE.
6. CONTRACTOR SHALL SUBMIT LADDER DETAILS FOR MANHOLES TO PROJECT MANAGER FOR APPROVAL PRIOR TO CONSTRUCTION.

CONSTRUCTION NOTES:

A. STORM SEWER PIPE
B. PRECAST VERTICAL PIPE
C. PRECAST MANHOLE RISERS
D. SPRINGLINE
E. LOWEST MANHOLE STEP (IF STEPS REQUIRED)

TEE TYPE MANHOLE
N.T.S.

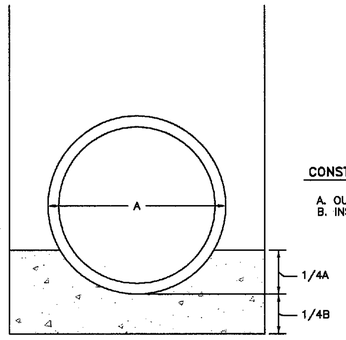

CONSTRUCTION NOTES:

A. OUTSIDE DIAMETER OF PIPE
B. INSIDE DIAMETER OF PIPE

CONCRETE CRADLE
N.T.S.

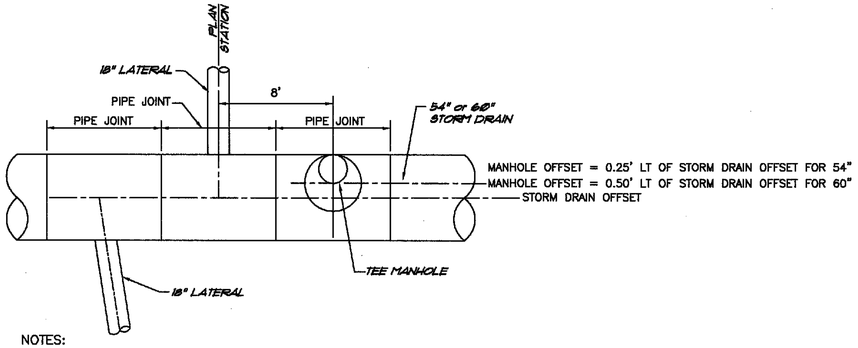

NOTES:
1. STORM DRAIN OFFSET VARIES. SEE SHEETS 3-4 TO 3-6.

LATERAL CONNECTION DETAIL AT TEE TYPE MANHOLES
N.T.S.

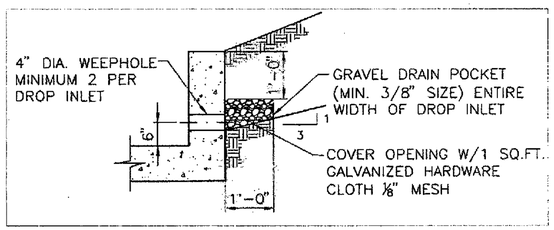

WEEP HOLE DETAIL
N.T.S.

NO.	DESCRIPTION	DATE	BY
3			
2			
1			

REVISIONS (OR CHANGE NOTICES)

ALAMDEEN ETLAMDIS NEW MEXICO 19985 PROFESSIONAL ENGINEER

CITY OF SANTA FE

CERRILLOS ROAD PHASE IIC
CAMINO CARLOS REY TO
LLANO STREET
SANTA FE COUNTY

MISCELLANEOUS DETAILS

SCALE

DESIGNED BY: JDE	DRAWN BY: OMB	CHECKED BY: AE
DATE: 08.10.15	DATE: 08.10.15	DATE: 08.10.15

N.M. PROJECT NO. CN S100130 SHEET NO. 2-21

Thu, 1-Oct-2015 - 1:16:pm, Plotted by: LMENDEZ
P:\20140158\WR\Design\Plans\Phase IIC\20140158_08_MD05.dwg

SITE DESCRIPTION & NOI INPUTS

NATURE OF ACTIVITY		ROADWAY CONSTRUCTION
GENERAL LOCATION & SITE MAP		REFER TO VICINITY MAP
DISTURBED AND UNDISTURBED AREA		REFER TO ROADWAY PLANS
STRUCTURAL & NON-STRUCTURAL CONTROLS		REFER TO ROADWAY PLANS
LOCATIONS WHERE STABILIZATION WILL OCCUR		REFER TO LANDSCAPING PLANS
TOTAL SITE AREA	11.68 acres	AREA WITHIN THE R/W
RECEIVING WATER		ARROYO DE LOS CHAMISOS
TOTAL DISTURBED AREA	11.68 acres	AREA WITHIN THE SLOPE LIMITS
LATITUDE	35° 39' 24"	
LONGITUDE	105° 59' 20"	
ESTIMATE OF LIKELIHOOD OF DISCHARGE	UNLIKELY	
ENDANGERED SPECIES OR CRITICAL HABITAT (YES OR NO)	ENV. SECTION	NO
PART I.B.3.e(2) OF THE PERMIT (a,b,c, or d)	ENV. SECTION	

DRAINAGE PARAMETERS

DRAINAGE PATTERNS		SEE DRAINAGE P&P SHEETS (3-4 TO 3-6)
APPROXIMATE SLOPES AFTER MAJOR GRADING		SEE DRAINAGE P&P SHEETS (3-4 TO 3-6)
RAINFALL 2-YEAR,24-HOUR, inch (mm)	1.63	
2-YEAR, 1-HOUR, inch (mm)	0.85	
INTENSITY, in/hr (mm/hr) FOR T_C = 10 minutes	0.383	
HYDROLOGICAL SOIL GROUP	D	
CURVE NUMBER(CN), UNDISTURBED AREA	98	
CURVE NUMBER(CN), DISTURBED AREA	98	
RUNOFF COEFFICIENT, PRIOR TO CONSTRUCTION	0.93	
RUNOFF COEFFICIENT, DURING CONSTRUCTION	0.93	
RUNOFF COEFFICIENT, AFTER CONSTRUCTION	0.93	

RUNOFF DISCHARGE & VOLUME CALCULATION

THE FOLLOWING PROCEDURES SHOULD BE USED TO CALCULATE THE RUNOFF DISCHARGE AND VOLUME TO DESIGN THE EROSION CONTROL MEASURES.

DISCHARGE: Q= CIA (English) Q= 0.0028CIA (Metric)

WHERE, Q= DISCHARGE, cfs (m^3/s)
C= RUNOFF COEFFICIENT
I= RAINFALL INTENSITY, in/hr (mm/hr)
A= AREA OF THE SITE, acres (hectares)

VOLUME: $V= QT_C$

WHERE, V= VOLUME, ft^3 (m^3/s)
T_C= (1/60) 0.0078 $L^{0.77}S^{-0.385}$ minutes
Assume T_C = 10 min. for basins within the project limits
L= LENGTH OF WATERSHED, ft. (m)
S= SLOPE, ft/ft (m/m)

PARSONS BRINCKERHOFF

CITY OF SANTA FE NEW MEXICO PROJECT NO.	SHEET NO.
CN S100130	2-22

GENERAL NOTES:

1. THE 2012 EDITION OF NMDOT NATIONAL POLLUTANT DISCHARGE ELIMINATION SYSTEM (NPDES) HANDBOOK AND SECTION 603 – TEMPORARY EROSION & SEDIMENT CONTROL OF THE 2014 NEW MEXICO DEPARTMENT OF TRANSPORTATION STANDARD SPECIFICATIONS FOR HIGHWAY AND BRIDGE CONSTRUCTION – SHALL BE USED AS MINIMUM REQUIREMENTS TO DEVELOP OR MODIFY THE STORM WATER POLLUTION PREVENTION PLAN (SWPPP).

2. THE NPDES PERMIT NUMBER FOR THE PROJECT OR A COPY OF THE NOTICE OF INTENT (NOI), IF A PERMIT NUMBER HAS NOT YET BEEN ASSIGNED, SHALL BE POSTED AT THE PROJECT SITE OR THE FIELD OFFICE AT ALL TIMES DURING CONSTRUCTION.

3. THE STORM WATER POLLUTION PREVENTION PLAN (SWPPP) AND ALL MAINTENANCE AND INSPECTION REPORTS SHALL BE SIGNED BY A QUALIFIED INSPECTOR ASSIGNED BY THE CONTRACTOR. THE SW PPP PACKAGE AND THE REPORTS SHALL BE AVAILABLE TO AN EPA REPRESENTATIVE AT ALL TIMES DURING CONSTRUCTION.

4. ALL DRAINAGE INFORMATION NEEDED TO COMPLETE THE NOTICE OF INTENT (NOI) IS PROVIDED IN THIS PLAN.

5. THE CONCTRACTOR SHALL GIVE THE NPDES PERMIT NUMBER TO THE PROJECT MANAGER BEFORE ANY EARTH MOVING ACTIVITIES TAKE PLACE.

6. EXCHANGE WATTLES FOR SILT FENCE ON THE 603 SERIES STANDARD DRAWINGS. WATTLES ARE TO BE APPLIED ACCORDING TO THE MANUFACTURES RECOMENDATIONS.

7. CITY OF SANTA FE STORMWATER ILLICIT DISCHARGE CONTROL: SFCC 13–2 PROHIBITS THE DISCHARGE OF POLLUTANTS INCLUDING SEDIMENT, SLURRIES, MUD, PLASTERS, CONCRETE RINSATES AND ANY CONSTRUCTION MATERIALS, WASTES AND GARBAGE, ETC. TO THE STORM DRAIN SYSTEM. THE STORM DRAIN SYSTEM INCLUDES ROADS, STREETS, CURBS, GUTTERS, DROP INLETS, PIPED STORM DRAINS, CULVERTS, RETENTION AND DETENTION BASINS, NATURAL AND MAN–MADE DRAINAGE CHANNELS, ARROYOS, RIVERS AND ANY FACILITY AND APPURTENANCE BY WHICH STORMWATER IS COLLECTED AND/OR CONVEYED.

8. CITY OF SANTA FE TERRAIN AND STORMWATER REGULATIONS: SFCC 14–8.2 REQUIRES THAT CONSTRUCTION DISTURBED AREA SHALL BE PROTECTED AGAINST EROSION. SEDIMENT MUST BE CONTAINED ON THE DISTURBED AREA BY THE USE OF TEMPORARY EROSION AND SEDIMENT CONTROL DEVICES SUCH AS SILT FENCING, MULCH SOCKS, SWALES, BERMS, GEOTEXTILES, SEDIMENT BASINS AND TRAPS. PROTECTION FOR STORM DRAIN INLETS SHALL BE PROVIDED TO PREVENT THE ENTRY OF SEDIMENT FROM THE SITE WHILE STILL ALLOWING THE ENTRY OF STORMWATER. CONTROL DEVICES SHALL BE KEPT IN PLACE AND USED UNTIL THE DISTURBED AREA IS PERMANENTLY STABILIZED.

9. THE CONTRACTOR SHALL NOT REMOVE SILT FENCES AND MULCH SOCKS OR OTHER TEMPORARY EROSION AND SEDIMENT CONTROL DEVICES UNTIL DISTURBED AREAS ARE STABILIZED. THE CONTRACTOR SHALL REMOVE SUCH DEVICES ONLY AT THE DIRECTION OF THE PROJECT MANAGER. SUCH DIRECTION MAY BE GIVEN PRIOR TO OR ON THE DATE OF THE WARRANTY INSPECTION. THIS WORK SHALL BE CONSIDERED INCIDENTAL TO ITEM NO. 603281 – SWPPP MANAGMENT AND NO SEPARATE MEASUREMENT OR PAYMENT WILL BE MADE THEREFOR.

10. THE CONTRACTOR SHALL ADHERE TO THE FOLLOWING REQUIREMENTS:

- THE CONTRACTOR SHALL COMPLY WITH ALL PROVISIONS OF THE 2012 CONSTRUCTION GENERAL PERMIT (CGP) INCLUDING PART 10.D.1.B.
- THE CONTRACTOR SHALL KEEP THE SWPPP AND ASSOCIATED SITE MAP UPDATED WITH ALL ADDITIONS, DELETIONS, AND REVISIONS TO BMPS. ON–SITE AND OFF–SITE LOCATIONS OF MATERIALS OR EQUIPMENT STORAGE SHALL ALSO BE INCLUDED IN THE SWPPP SITE MAP.
- THE SWPPP SHALL INCLUDE DATES OF ALL MAJOR GRADING ACTIVITIES, TEMPORARY/PERMANENT CONSTRUCTION CESSATION, AND INITIATION OF STABILIZATION PRACTICES.
- THE CONTRACTOR SHALL INSPECT ALL DISCHARGE LOCATIONS IF ACCESSIBLE, OR NEARBY DOWNSTREAM LOCATIONS IF INACCESSIBLE.
- IN ACCORDANCE WITH THE 2012 CGP, APPROPRIATE MEASURES SHALL BE TAKEN TO ADDRESS CONCRETE WASH–OUT ACTIVITIES. CONCRETE WASH–OUTS DETAILS SHALL BE SUBMITTED TO THE PROJECT MANAGER FOR APPROVAL. THE CONTRACTOR SHALL DOCUMENT INSTALLATION/CONDITION OF CONCRETE WASH–OUTS AND OTHER OFF–SITE MEASURES IN THE SWPPP INSPECTION REPORTS.
- IN ACCORDANCE WITH THE 2012 CGP, APPROPRIATE MEASURES SHALL BE TAKEN TO ADDRESS MATERIAL OFF–SITE TRACKING. OFF–SITE TRACKING MEASURES SHALL BE SUBMITTED TO THE PROJECT MANAGER FOR APPROVAL. THE CONTRACTOR SHALL DOCUMENT INSTALLATION/CONDITION OF OFF–SITE TRACKING MEASURES IN THE SWPPP INSPECTION REPORTS.
- THE CONTRACTOR SHALL COMPLY WITH ALL RELEVANT PROVISIONS OF THE MUNICIPAL SEPARATE STORM SEWER SYSTEM (MS4) PERMIT.

11. THE CONTRACTOR SHALL OBTAIN A LETTER FROM THE PM DESIGNATING SIGNATURE AUTHORITY TO BE INSERTED IN THE SWPPP.

JAMES H. BUCKMAN NEW MEXICO 13062 REGISTERED PROFESSIONAL ENGINEER 10/7/15

NO.	DESCRIPTION	DATE	BY
3			
2			
1			

REVISIONS (OR CHANGE NOTICES)

CITY OF SANTA FE

CERRILLOS ROAD PHASE IIC
CAMINO CARLOS REY TO
LLANO STREET
SANTA FE COUNTY

TEMPORARY EROSION AND SEDIMENT CONTROL NOTES

SCALE

DESIGNED BY: PB	DRAWN BY: PB	CHECKED BY: JB
DATE: 08/07/15	DATE: 08/07/15	DATE: 08/07/15

STORM WATER POLLUTION PREVENTION PLAN INFORMATION

PARSONS BRINCKERHOFF

CITY OF SANTA FE	SHEET
NEW MEXICO PROJECT NO.	NO.
CN S100130	2-23

NOI INPUTS

NMDOT PROJECTS REQUIRE ELECTRONIC NOI SUBMISSION- PAPER SUBMISSION REQUIRES PRIOR APPROVAL.	
PERMIT NUMBER: NMR120000 STATE OF NEW MEXICO, EXCEPT INDIAN COUNTRY NMR120001 INDIAN COUNTRY WITHIN THE STATE OF NEW MEXICO, EXCEPT NAVAJO RESERVATION LANDS THAT ARE COVERED UNDER ARIZONA PERMIT AZ100001 AND UTE MOUNTAIN RESERVATION LANDS THAT ARE COVERED UNDER COLORADO PERMIT COR100001.	
OPERATOR INFORMATION: SEE CITY ADDRESS, THIS SHEET	
IRS EMPLOYER IDENTIFICATION NUMBER (EIN): CITY OF SANTA FE: 856000168	
POINT OF CONTACT: CITY PROJECT MANAGER	
NOI PREPARED BY: CITY PROJECT MANAGER	
PROJECT / SITE NAME: CN S100130	
PROJECT / SITE ADDRESS: CERRILLOS ROAD. T17N, R9E, SEC. 33 & SEC. 34	
LATITUDE	35°39'46" N
LONGITUDE	105°58' 42" W
FEDERAL OPERATOR = "ANY DEPARTMENT, AGENCY, OR INSTRUMENTALITY OF THE EXECUTIVE, LEGISLATIVE, AND JUDICIAL BRANCHES OF THE FEDERAL GOVERNMENT OF THE UNITED STATES"	
ESTIMATED PROJECT START DATE	TO BE DETERMINED BY PROJECT MANAGER
ESTIMATED PROJECT COMPLETION DATE	TO BE DETERMINED BY PROJECT MANAGER
ESTIMATED AREA TO BE DISTURBED (NEAREST 1/4 ACRE)	9.0 ACRES
COMMENCED EARTH-DISTURBING ACTIVITIES?	NO
PREVIOUS NPDES PERMIT? IF YES, PERMIT NO:	NO
MUNICIPAL SEPARATE STORM SEWER SYSTEM (MS4): YES: SANTA FE	
SURFACE WATERS WITHIN 50 FT? YES/NO	NO
RECEIVING WATER	ARROYO DE LOS CHAMISOS TO SANTA FE RIVER
IMPAIRED WATERS: SANTA FE RIVER (PASEO DEL CANON TO SANTA FE WWTP)	
IMPAIRED WATERS METHOD: ONLINE CONSULTATION OF NEW MEXICO ENVIRONMENT DEPARTMENT LISTING OF OF STATEWIDE 303D AND TMDL IMPAIRMENTS.	
TIER 2, TIER 2.5, TIER 3 WATERS - CONSULT 2012 CGP APPENDIX "F"	
CHEMICAL TREATMENT INFORMATION - TYPICAL CITY PROJECT WILL NOT UTILIZE THESE CHEMICALS.	
SWPPP CONTACT INFORMATION - CITY PROJECT MANAGER	
ENDANGERED SPECIES CRITERIA (A, B, C, D, E, or F): CRITERION A. A BIOLOGICAL RESOURCE SURVEY WAS COMPLETED AND NO FEDERALLY LISTED SPECIES WERE OBSERVED WITHIN THE PROJECT AREA.	
HISTORIC PRESERVATION - THE STORMWATER CONTROLS FOR THIS PROJECT DO NOT CAUSE SUBSURFACE EARTH DISTURBANCE. CONSULTATION WAS CONDUCTED AND COMPLETED WITH THE SHPO AND USNPS.	
CERTIFICATION: NOI MUST BE CERTIFIED BY "A PRINCIPAL EXECUTIVE OFFICER OR RANKING ELECTED OFFICIAL".	

DRAINAGE PATTERNS	REFER TO TESCP PLAN SHEETS
APPROXIMATE SLOPES AFTER MAJOR GRADING	3 H-TO-1 V SLOPES
RAINFALL 2-YEAR, 24-HOUR, Inch, (mm)	1.65 INCHES
2-YEAR, 1-HOUR, Inch, (mm)	0.86 INCHES
INTENSITY, FOR Tc = 10 minutes	2.49 INCHES/ HOUR
HYDROLOGICAL SOIL GROUP	"D"
CURVE NUMBER (CN), UNDISTURBED AREA	98
CURVE NUMBER (CN), DISTURBED AREA	98
RUNOFF COEFFICIENT, PRIOR TO CONSTRUCTION	0.93
RUNOFF COEFFICIENT, DURING CONSTRUCTION	0.93
RUNOFF COEFFICIENT, AFTER CONSTRUCTION	0.93

GENERAL NOTES:

1. THE 2012 EDITION OF NMDOT NATIONAL POLLUTANT DISCHARGE ELIMINATION SYSTEM (NPDES) HANDBOOK AND SECTION 603 - TEMPORARY EROSION AND SEDIMENT CONTROL OF THE 2014 NEW MEXICO DEPARTMENT OF TRANSPORTATION STANDARD SPECIFICATIONS FOR HIGHWAY AND BRIDGE CONSTRUCTION - SHALL BE USED AS MINIMUM REQUIREMENTS TO DEVELOP OR MODIFY THE STORM WATER POLLUTION PREVENTION PLAN (SWPPP).
2. THE NPDES PERMIT NUMBER FOR THE PROJECT OR A COPY OF THE NOTICE OF INTENT (NOI), IF A PERMIT NUMBER HAS NOT YET BEEN ASSIGNED, SHALL BE POSTED AT THE PROJECT SITE OR THE FIELD OFFICE AT ALL TIMES DURING CONSTRUCTION.
3. THE STORM WATER POLLUTION PREVENTION PLAN (SWPPP) AND ALL MAINTENANCE AND INSPECTION REPORTS SHALL BE SIGNED BY A QUALIFIED INSPECTOR ASSIGNED BY CONTRACTOR. THE SWPPP AND THE INSPECTION REPORTS SHALL BE AVAILABLE TO EPA REPRESENTATIVE AT ALL TIMES DURING CONSTRUCTION.
4. ALL DRAINAGE INFORMATION NEEDED TO COMPLETE THE NOTICE OF INTENT (NOI) ARE PROVIDED IN THIS PLAN.
5. BMPS SHOWN ON TESCP ARE DETERMINED USING THE EQUATIONS SHOWN ON THIS SHEET AND OTHER HYDROLOGIC MODELS AS SPECIFIED IN THE DEPARTMENTS DRAINAGE MANUALS LATEST EDITION. BMPS CONTROL SEDIMENT SO THAT NO ADDITIONAL SEDIMENT RESULTING FROM CONSTRUCTION ACTIVITIES DISCHARGE TO WATERWAYS.
6. THE CONTRACTOR SHALL SPECIFICALLY DEFINE ALL REQUIRED CONTROL MEASURES FOR EACH CONSTRUCTION PHASE, AND SHALL COMPLY WITH THE PROVISIONS OF THE NMDOT NPDES MANUAL AND THE 2012 EPA'S CONSTRUCTION GENERAL PERMIT.
7. THERE ARE NO FINAL STABILIZATION TESCP SHEETS FOR THIS PROJECT.

LIST OF APPROVED TMDLs IN NEW MEXICO

Caliente Canyon (Vermejo River to headwaters)
Cieneguilla Creek (Eagle Nest Lake to headwaters)
Cimarron River (Canadian River to Cimarron Village)
Cimarron River (Cimarron Village to Turkey Creek)
Cimarron River (Turkey Creek to Eagle Nest Lake)
Coyote Creek (Mora River to Black Lake)
Little Coyote Creek (Black lake to headwaters)
Middle Ponil Creek (South Ponil Creek to headwaters)
Mora River (USGS gage east of Shoemaker to Hwy 434)
Mora River (Hwy 434 to headwaters)
Moreno Creek (Eagle Nest Lake to headwaters)
North Ponil Creek (South Ponil Creek to McCrystal Creek)
Ponil Creek (Cimarron River to confluence of North and South Ponil)
Ponil Creek (Cimarron River to US 64)
Ponil Creek (Us 64 to confl of North and South Ponil)
Rayado Creek (Miami Lake Diversion to headwaters)
Rayado Creek (Cimarron River to Miami Lake Diversion)
Sapello River (Mora River to Manuelitas Creek)
Sixmile Creek (Eagle Nest Lake to headwaters)
South Ponil Creek (Ponil Creek to Middle Ponil)
Ute Creek (Cimarron River to headwaters)
Vermejo River (Rail Canyon to York Canyon)
Vermejo River (York Canyon to headwaters)
York Canyon (Vermejo Park to headwaters)
Dry Cimarron River (perennial reaches OK bnd to Long Canyon)
Dry Cimarron River (Long Canyon to Oak Creek)
Long Canyon (perennial reaches above Dry Cimarron)
Oak Creek (Dry Cimarron to headwaters)
Black Canyon Creek (East Fork Gila River to headwaters)
Canyon Creek (Middle Fork Gila River to headwaters)
Centerfire Creek (San Francisco R to headwaters)
Gila River (East Fork)
Mangas Creek (Gila River to Mangas Springs)
Mogollon Creek (Perennial reaches abv USGS gage)
Negrito Creek (South Fork)
San Francisco River (Centerfire Creek to AZ border)
Sapillo Creek (Gila River to Lake Roberts)
Taylor Creek (Beaver Creek to Wall Lake)
Tularosa River (San Francisco R to Apache Creek)
Whitewater Creek (San Francisco River to White-water Campgrd)
Rio Grande (International Mexico boundary to Leasburg Dam)
Rio Grande (Leasburg Dam to Percha Dam)
Abiquiu Creek (Rio Chama to headwaters)
Canones Creek (Abiquiu Reservoir to headwaters)
Chavez Creek (Rio Brazos to headwaters)
Poleo Creek (Rio Puerco de Chama to headwaters)
Polvadera Creek (Canones Creek to headwaters)
Rio Brazos (Rio Chama to Chavez Creek)
Rio Chama (Rio Brazos to Little Willow Creek)
Rio Chamita (Rio Chama to CO border)
Rio Chamita (Rio Chama to CO border)
Rio Nutrias (Rio Chama to headwaters)
Rio Vallecitos (Rio Tusas to headwaters)
Rito de Tierra Amarilla (Rio Chama to HWY 64)
Santa Fe River (Cochiti Pueblo bnd to Santa Fe WWTP)
Clear Creek (Rio de las Vacas to San Gregio Lake)
Jemez River (East Fork)
East Fork Jemez (East Fork Jemez to to headwaters)
East Fork Jemez River (San Antonio Creek to VCNP boundary)
Jemez River (HWY 4 near Jemez Springs to East Fork)
Jemez River (Rio Guadalupe to HWY 4 nr Jemez Springs)
Jemez River (Zia Pueblo bnd to Jemez Pueblo bnd)
Jemez River (Jemez Pueblo bnd to Rio Guadalupe)
Jemez River (Rio Guadalupe to Soda Dam nr Jemez Springs)
Jemez River (Soda Dam nr Jemez Springs to East Fork)
Redondo Creek (Sulphur Creek to headwaters)
Jaramillo Creek (VCNP boundary to headwaters)
Rio Cebolla (Fenton Lake to headwaters)
Rio Cebolla (Rio de las Vacas to Fenton Lake)
Rio de las Vacas (Rio Cebolla to Clear Creek)
Rio de las Vacas (Rio Cebolla to Rito de las Palomas)
Rio Guadalupe (Jemez River to confl with Rio Cebolla)
Rito de las Palomas (Rio de las Vacas to headwaters)
Rito Penas Negras (Rio de las Vacas to headwaters)
San Antonio Creek (East Fork Jemez River to headwaters)
San Antonio Creek (East Fork Jemez to VCNP bnd)
Sulphur Creek (Redondo Creek to headwaters)
Bluewater Creek (Bluewater Reservoir to headwaters)
Bluewater Creek (non-tribal Rio San Jose to Bluewtaer Rsrv)
La Jara Creek (perennial reaches above Arroyo San Jose)
Rio Grande (non-Pueblo Alameda to Angostura Diversion)
Rio Grande (Alameda Bridge to Santa Ana Pueblo bnd)
Rio Grande (Isleta Pueblo boundary to Alameda Bridge)
Rio Grande (Rio Puerco to Isleta Pueblo boundary)
Rio Grande (San Marcial at USGS gage to Rio Puerco)
Rio Moquino (Laguna Pueblo to Seboyetita Creek)
Rio Puerco (Arroyo Chijuilla to Northern Boundary Cuba)
Bitter Creek (Red River to headwaters)
Comanche Creek (Costilla Creek to Little Costilla Creek)
Cordova Creek (Costilla Creek to headwaters)
Costilla Creek (diversion above Costilla to Comanche Creek)
Embudo Creek (Rio Grande to Canada de Ojo Sarco)
Little Tesuque (Rio Tesuque to headwaters)
Placer Creek (Red River to headwaters)
Red River (Rio Grande to Placer Creek)
Rio de los Pinos (Colorado border to headwaters)
Rio Fernando de Taos (Rio Pueblo de Taos to headwaters)
Rio Grande (non-pueblo Santa Clara to Embudo Creek)
Rio Grande (Red River to NM-CO border)
Rio Grande del Rancho (Rio Pueblo de Taos to Hwy 518)
Rio Hondo (Rio Grande to USFS boundary)
Rio Hondo (South Fork of Rio Hondo to Lake Fork Creek)
Rio Pueblo de Taos (Arroyo del Alamo to Rio Grande del Rancho)
Rio Pueblo de Taos (Rio Grande del Rancho to Taos Pueblo bounadry)
Rio Pueblo de Taos (Rio Grande to Arroyo del Alamo)
Rio San Antonio (Montoya Canyon to headwaters)
Rio Santa Barbara (Picuris Pueblo boundary to USFS bounadry)
Bull Creek (Cow Creek to headwaters)
Cow Creek (Bull Creek to headwaters)
Cow Creek (Pecos River to Bull Creek)
Gallinas River (Las Vegas diversion to headwaters)
Pecos River (Alamitos Canyon to Willow Creek)
Pecos River (Canon de Manzanita to Alamitos Canyon)
Carrizo Creek (Rio Ruidoso to Mescalero Apache boundary)
Rio Bonito (Angus Canyon to headwaters)
Rio Hondo (Perennial Reaches Pecos to headwaters)
Rio Ruidoso (Rio Bonito to US Highway 70)
Rio Ruidoso (US Highway 70 Mescalero Apache boundary)
Animas River (San Juan River to Estes Arroyo)
Gallegos Canyon (San Juan to Navajo Boundary)
La Plata River (McDermott Arroyo to Colorado Border)
La Plata River (San Juan River to McDermott Arroyo)
San Juan River (Navajo Boundary at Hogback to Animas River)
San Juan River (Animas River to Canon Largo)

RUNOFF DISCHARGE & VOLUME CALCULATION:

THE FOLLOWING PROCEDURES SHOULD BE USED TO CALCULATE THE RUNOFF DISHARGE AND VOLUME TO DESIGN THE EROSION CONTROL MEASURES:

DISCHARGE: $Q = CIA$
WHERE: Q = DISCHARGE, cfs
C = RUNOFF COEFFICIENT
I = RAINFALL INTENSITY, in/hr
A = AREA OF THE SITE, acres

VOLUME: $V = QT_0$
WHERE: V = VOLUME, ft
$T_C = (1/60)\ 0.0078\ L^{0.77}S^{-0.385}$ minutes
Assume T_0 = 10 min. for basins within the project limits
L = LENGTH OF WATERSHED, ft
S = SLOPE, ft / ft

IMPAIRED STREAMS IN NEW MEXICO

THE MAP BELOW SHOWS IMPAIRED WATERS LOCATIONS AS OF MARCH 2012.
IF YOUR PROJECT IS ADJACENT OR NEAR TO AN IMPAIRED WATER, CONSULT THE NEW MEXICO ENVIRONMENT DEPARTMENT WEBSITE TO UTILIZE THEIR GIS MAPPING TOOL TO IDENTIFY THE IMPAIRMENT. EACH IMPAIRED STREAM LOCATION WILL IDENTIFY THE IMPAIRMENT WHEN THE "ID" TOOL IS USED BY CLICKING WITH THE MOUSE IS USED BY CLICKING WITH THE MOUSE ON A PARTICULAR IMPAIRED STREAM.

http://gis.nmenv.state.nm.us/EGIS/

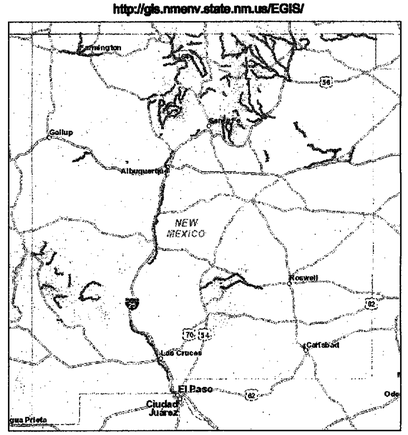

CITY ADDRESS

CITY OF SANTA FE
P.O. BOX 909
SANTA FE, NM 87504 - 0909
TELEPHONE: 505 - 955 - 6621

REGULATED SMALL MS4s IN NEW MEXICO

Albuquerque
Bernalillo
Carnuel
Corrales
Isleta Village Proper
Los Ranchos de Albuquerque
Rio Rancho
Santa Ana Pueblo
Bernalillo County
Sandoval County
Dona Ana
Las Cruces
Mesilla
University Park
Dona Ana County
Aztec
Farmington
Flora Vista
Kirtland
San Juan County
Agua Fria
La Cienega
Santa Fe
Tesuque
Santa Fe County
Anthony, TX
Santa Teresa
Sunland Park

JAMES H. BUCKMAN NEW MEXICO 13062 10/1/15 REGISTERED PROFESSIONAL ENGINEER

NO.	DESCRIPTION	DATE	BY
3			
2			
1			

REVISIONS (OR CHANGE NOTICES)

SCALE

DESIGNED BY: PB	DRAWN BY: PB	CHECKED BY: JB
DATE: 08/07/15	DATE: 08/07/15	DATE: 08/07/15

CITY OF SANTA FE

CERRILLOS ROAD PHASE IIC
CAMINO CARLOS REY TO
LLANO STREET
SANTA FE COUNTY

STORM WATER POLLUTION PREVENTION PLAN (SWPPP) INFORMATION

REVISED UNIVERSAL SOIL LOSS EQUATION (RUSLE) CALCULATIONS

SOIL LOSS COMPUTATION

Benchmark: Pre-cons (check one) | Client: NMDOT, CN S100130
Alternative Treatment: none | Location: Cerrillos Rd. Sant
Rainfall Factor (RUSLE): 35 | County: Santa Fe
Soil Name & Tex: Gravel, Course Gravel | Date: 2/19/2014
Soil Loss Tolerance (T): t/ac/yr | Field Office:
Wind Climate Factor: | Planner: C Romo
RUSLE C factor (field 1): 0.061 | Crop Rotation:
(field 2):
(field 3):
(field 4):
(field 6):
(field 8):
Mgt. Condition:
Type of Land: Disturbed Land

WIND EROSION (Mgt. Period Method) Note: Attach WEQ run

(Wind erosion field number and size must be filled out to use in other forms of erosion.)

Field (num)	Size (ac)	Climatic C (factor)	Wnd I (factor)	Actual Loss (t/ac/yr)	Ton Ero by Field (t/yr)
1	3.25	0			0

WATER EROSION (RUSLE)-sheet and rill erosion R x K x LS x C x P = A

Field (num)	Size (ac)	Rainfall R (factor)	Soil K (factor)	Slope (%)	Length (ft)	Length-Slope LS (factor)	Cover-Mgt C (factor)	Support Practices P (factor)	Soil Loss A (t/ac/yr)	Tons by Field (t/yr)
1	3.25	35	0.32	2.00	45	0.16	0.061	1	0.1	0.4
									0.0	
									0.0	
									0.0	
									0.0	
									0.0	

PRE-CONSTRUCTION

SOIL LOSS COMPUTATION

Benchmark: Post-cons (check one) | Client: NMDOT, CN S100130
Alternative Treatment: None | Location: Cerrillos Rd. Sant
Rainfall Factor (RUSLE): 35 | County: Santa Fe
Soil Name & Tex: Clay, sandy clay | Date: 2/19/2014
Soil Loss Tolerance (T): t/ac/yr | Field Office:
Wind Climate Factor: | Planner: C Romo
RUSLE C factor (field 1): 0.061 | Crop Rotation:
(field 2):
(field 3):
(field 4):
(field 6):
(field 8):
Mgt. Condition:
Type of Land: Disturbed Land

WIND EROSION (Mgt. Period Method) Note: Attach WEQ run

(Wind erosion field number and size must be filled out to use in other forms of erosion.)

Field (num)	Size (ac)	Climatic C (factor)	Wnd I (factor)	Actual Loss (t/ac/yr)	Ton Ero by Field (t/yr)
1	1.7	0			0

WATER EROSION (RUSLE)-sheet and rill erosion R x K x LS x C x P = A

Field (num)	Size (ac)	Rainfall R (factor)	Soil K (factor)	Slope (%)	Length (ft)	Length-Slope LS (factor)	Cover-Mgt C (factor)	Support Practices P (factor)	Soil Loss A (t/ac/yr)	Tons by Field (t/yr)
1	1.7	35	0.32	2.00	20	0.13	0.061	1	0.1	0.2
									0.0	
									0.0	
									0.0	
									0.0	
									0.0	

POST-CONSTRUCTION

REVISED UNIVERSAL SOIL LOSS EQUATION (RUSLE) CALCULATIONS

JAMES H. BUCKMAN NEW MEXICO 13082 REGISTERED PROFESSIONAL ENGINEER 12/8/15

NO.	DESCRIPTION	DATE	BY
3			
2			
1			

REVISIONS (OR CHANGE NOTICES)

CITY OF SANTA FE

CERRILLOS ROAD PHASE IIC
CAMINO CARLOS REY TO
LLANO STREET
SANTA FE COUNTY

RUSLE CALCULATIONS

SCALE

DESIGNED BY: PB	DRAWN BY: PB	CHECKED BY: JB
DATE: 08/07/15	DATE: 08/07/15	DATE: 08/07/15

PARSONS BRINCKERHOFF

CITY OF SANTA FE	SHEET
NEW MEXICO PROJECT NO.	NO.
CN S100130	3–0

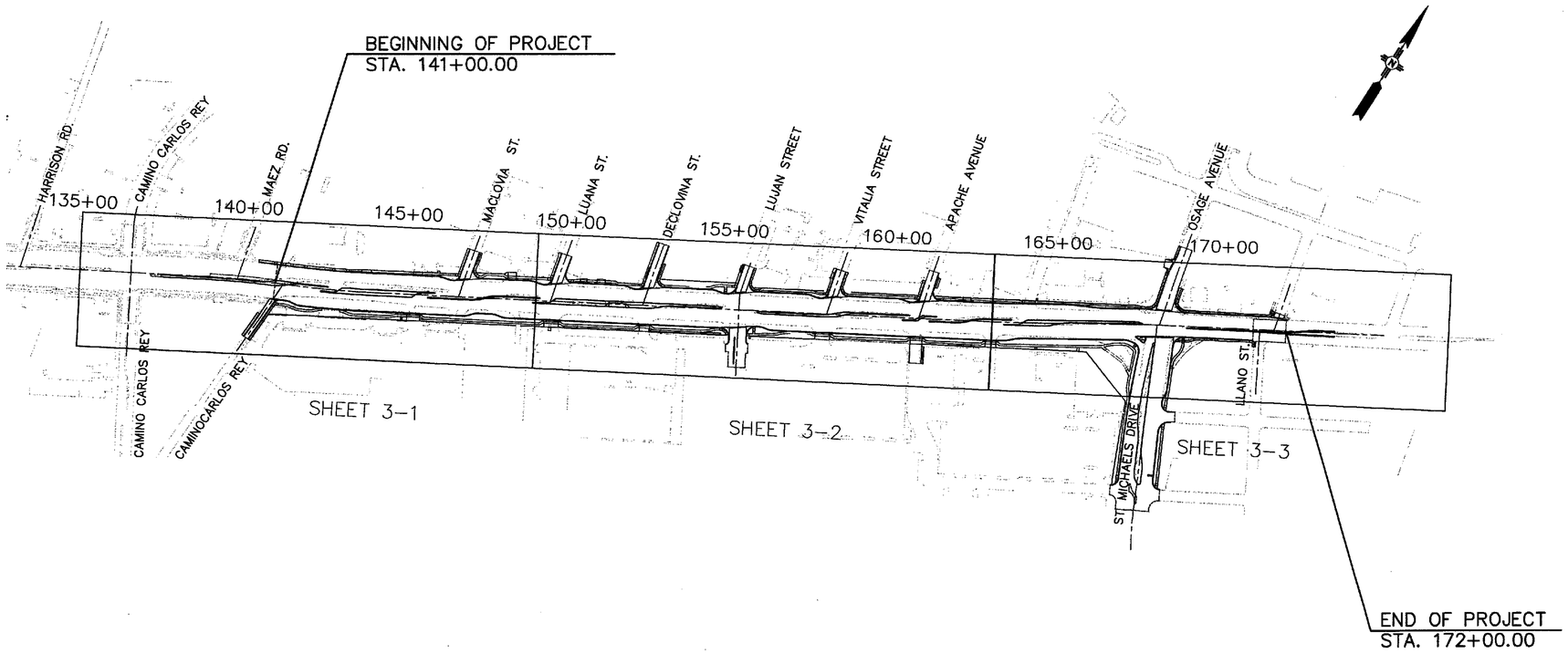

NO.	DESCRIPTION	DATE	BY
3			
2			
1			

REVISIONS (OR CHANGE NOTICES)

JAMES H. BUCKMAN NEW MEXICO 13062 REGISTERED PROFESSIONAL ENGINEER

CITY OF SANTA FE

CERRILLOS ROAD PHASE IIC
CAMINO CARLOS REY TO
LLANO STREET
SANTA FE COUNTY

PROJECT OVERVIEW SHEET

SCALE
HORIZ. 1"=200'

DESIGNED BY: PB	DRAWN BY: PB	CHECKED BY: JB
DATE: 08/07/15	DATE: 08/07/15	DATE: 08/07/15

J:\33693 Cerrillos Ph IIC\04 Engineering-33693\Plans\3_Sheets\3-0 Proj_Overview.dwg Oct 06, 2015 – 1:28pm Saved By: JimenezR

N.M. PROJECT NO. CN S100130 SHEET NO. 3–0

PARSONS BRINCKERHOFF

CITY OF SANTA FE	SHEET
NEW MEXICO PROJECT NO.	NO.
CN S100130	3–00

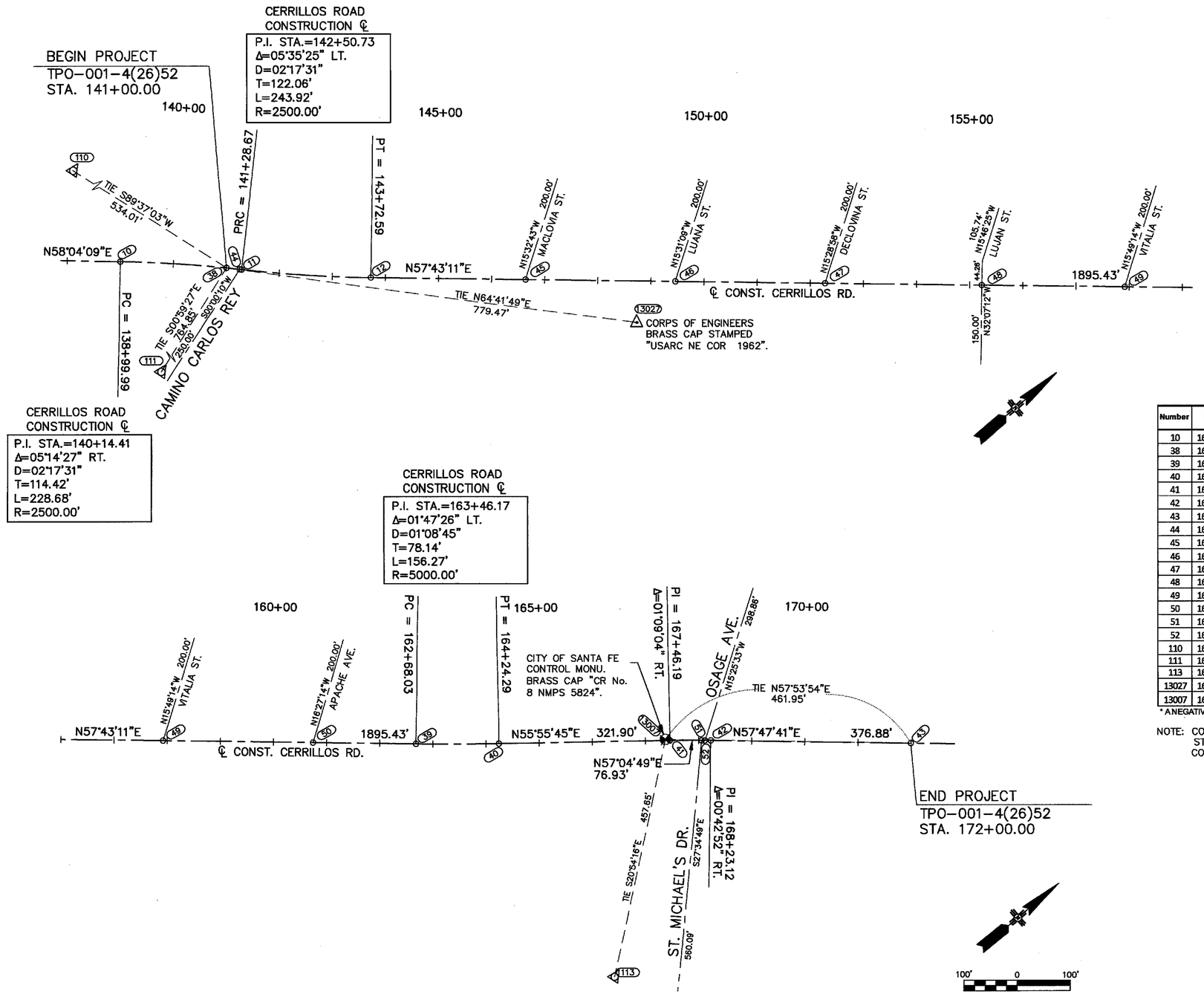

LEGEND

- DENOTES CITY OF SANTA FE CONTROL BRASS CAP
- DENOTES US ARMY CORPS OF ENGINEERS BRASS CAP
- DENOTES PANEL POINT
- DENOTES CALCULATED POINT

POINT DATA

Number	Northing	Easting	Elevation	CL. Sta.	CL. Offset *	Description
10	1695743.264	1719688.037	.	138+99.99	0.00	PC
38	1695842.145	1719861.825	.	141+00.00	0.00	B.O.P.
39	1696987.454	1721702.101	.	162+68.03	0.00	PC
40	1697072.960	1721832.890	.	164+24.29	0.00	PT
41	1697253.294	1722099.535	.	167+46.19	0.00	PI
42	1697295.101	1722164.111	.	168+23.12	0.00	PI
43	1697495.960	1722483.005	.	172+00.00	0.00	E.O.P.
44	1695853.585	1719884.220	.	141+25.15	0.00	10+00 Carlos Rey
45	1696130.719	1720345.841	.	146+63.83	0.00	10+00 Maclovia
46	1696281.281	1720584.189	.	149+45.75	0.00	10+00 Luanna
47	1696431.800	1720822.469	.	152+27.59	0.00	10+00 Declovina
48	1696589.567	1721072.224	.	155+23.00	0.00	10+00 Lujan
49	1696733.213	1721299.623	.	157+91.97	0.00	10+00 Vitalia
50	1696883.998	1721538.324	.	160+74.31	0.00	10+00 Apache
51	1697285.695	1722149.582	.	168+05.81	0.00	10+00 St. Michaels
52	1697289.192	1722154.983	.	168+12.25	0.00	10+00 Osage
110	1695838.580	1719327.830	6741.66			HV-7
111	1695077.410	1719875.050	6737.44	137+06.55	664.01	HV-8
113	1696822.910	1722254.870	6794.84	166+33.76	443.53	HV 10 Control
13027	1696175.295	1720566.510	6762.75	148+74.20	80.16	CE-USARMY
13007	1697250.469	1722091.684	6794.01	167+38.11	-2.06	CR8 - SF BC

* A NEGATIVE VALUE INDICATES LEFT OF CENTERLINE

NOTE: COORDINATES LISTED ARE LOCAL, GROUND PROJECT VALUES. STATION AND OFFSET VALUES LISTED ARE TO CERRILOS RD. CONSTRUCTION CENTERLINE.

NO.	DESCRIPTION	DATE	BY
3			
2			
1			

REVISIONS (OR CHANGE NOTICES)

JAMES H. BUCKMAN NEW MEXICO 13062 REGISTERED PROFESSIONAL ENGINEER

CITY OF SANTA FE

CERRILLOS ROAD PHASE IIC
CAMINO CARLOS REY TO
LLANO STREET
SANTA FE COUNTY

CENTERLINE SURVEY CONTROL

SCALE
HORIZ. 1"=100'

DESIGNED BY: PB	DRAWN BY: PB	CHECKED BY: JB
DATE: 08/07/15	DATE: 08/07/15	DATE: 08/07/15

CITY OF SANTA FE	SHEET
NEW MEXICO PROJECT NO.	NO.
CN S100130	3-1

PARSONS BRINCKERHOFF

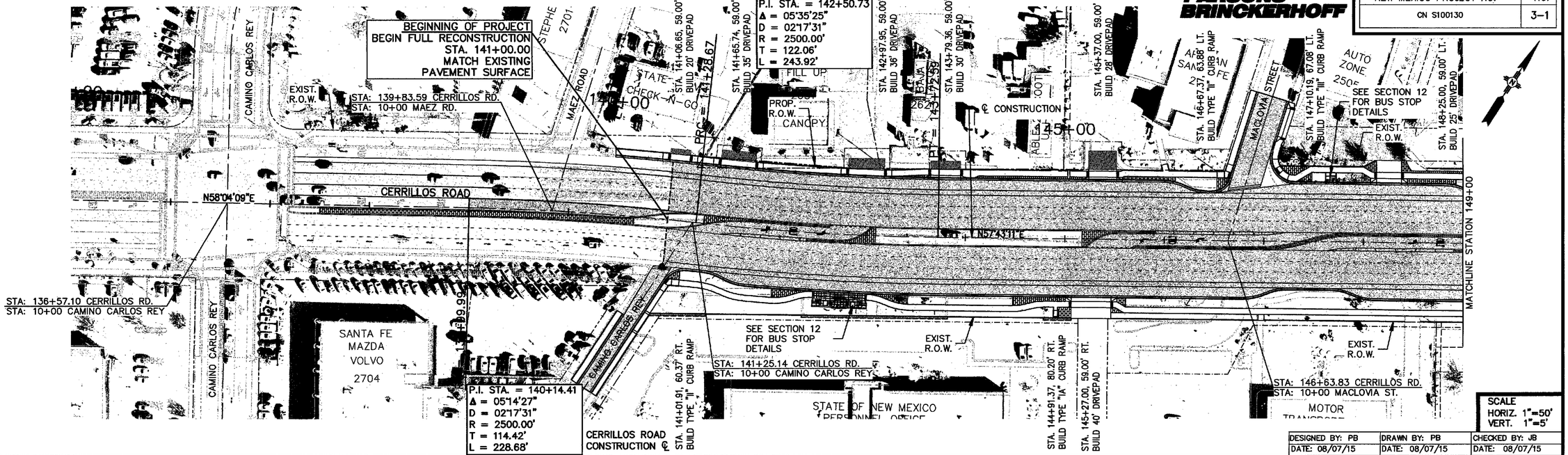

SCALE
HORIZ. 1"=50'
VERT. 1"=5'

DESIGNED BY: PB	DRAWN BY: PB	CHECKED BY: JB
DATE: 08/07/15	DATE: 08/07/15	DATE: 08/07/15

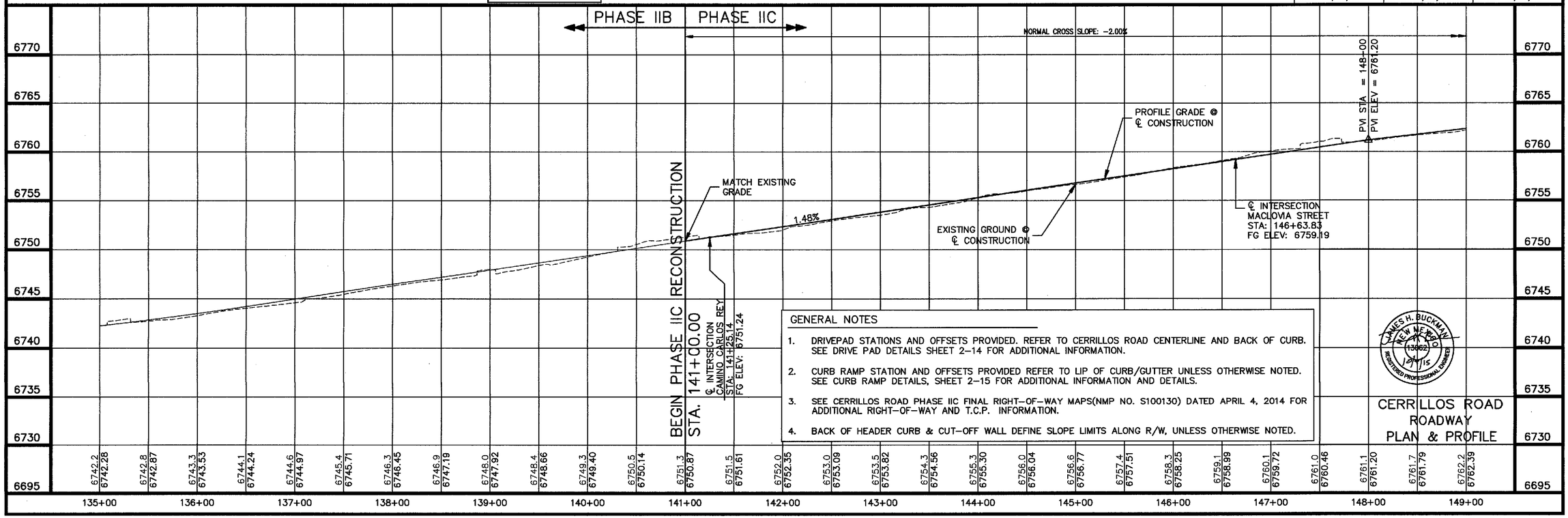

GENERAL NOTES

1. DRIVEPAD STATIONS AND OFFSETS PROVIDED. REFER TO CERRILLOS ROAD CENTERLINE AND BACK OF CURB. SEE DRIVE PAD DETAILS SHEET 2-14 FOR ADDITIONAL INFORMATION.
2. CURB RAMP STATION AND OFFSETS PROVIDED REFER TO LIP OF CURB/GUTTER UNLESS OTHERWISE NOTED. SEE CURB RAMP DETAILS, SHEET 2-15 FOR ADDITIONAL INFORMATION AND DETAILS.
3. SEE CERRILLOS ROAD PHASE IIC FINAL RIGHT-OF-WAY MAPS(NMP NO. S100130) DATED APRIL 4, 2014 FOR ADDITIONAL RIGHT-OF-WAY AND T.C.P. INFORMATION.
4. BACK OF HEADER CURB & CUT-OFF WALL DEFINE SLOPE LIMITS ALONG R/W, UNLESS OTHERWISE NOTED.

JAMES H. BUCKMAN NEW MEXICO 13062 REGISTERED PROFESSIONAL ENGINEER 1/7/15

CERRILLOS ROAD ROADWAY PLAN & PROFILE

CITY OF SANTA FE	SHEET
NEW MEXICO PROJECT NO.	NO.
CN S100130	3–2

PARSONS BRINCKERHOFF

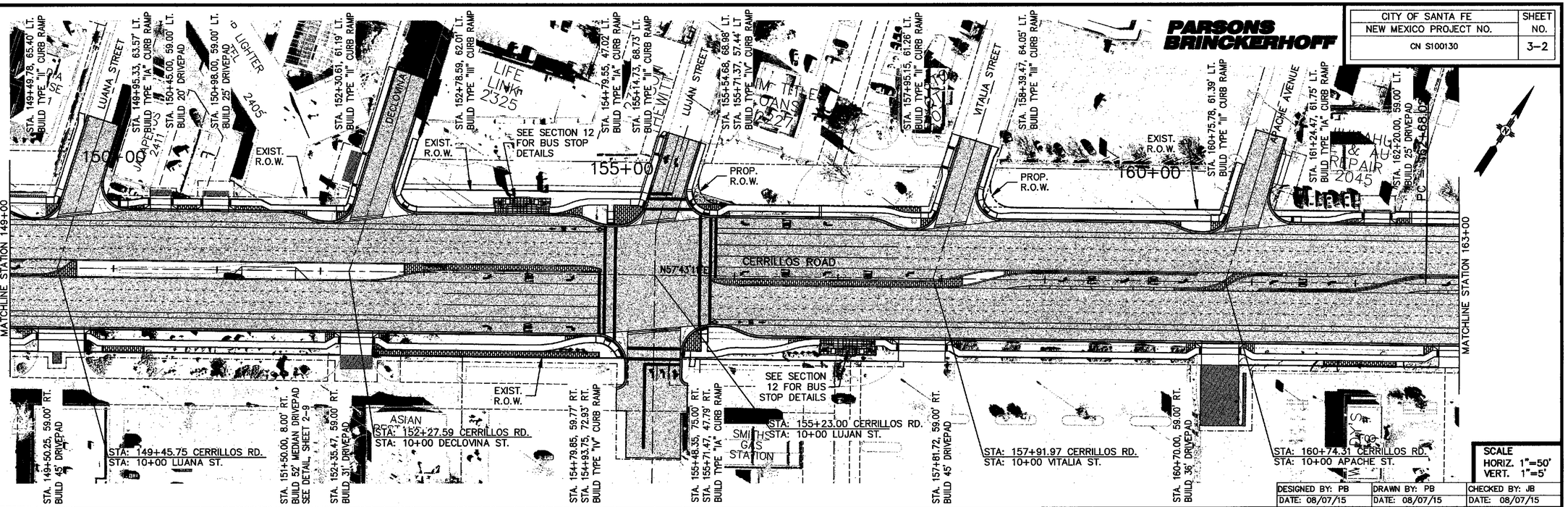

SCALE
HORIZ. 1"=50'
VERT. 1"=5'

DESIGNED BY: PB	DRAWN BY: PB	CHECKED BY: JB
DATE: 08/07/15	DATE: 08/07/15	DATE: 08/07/15

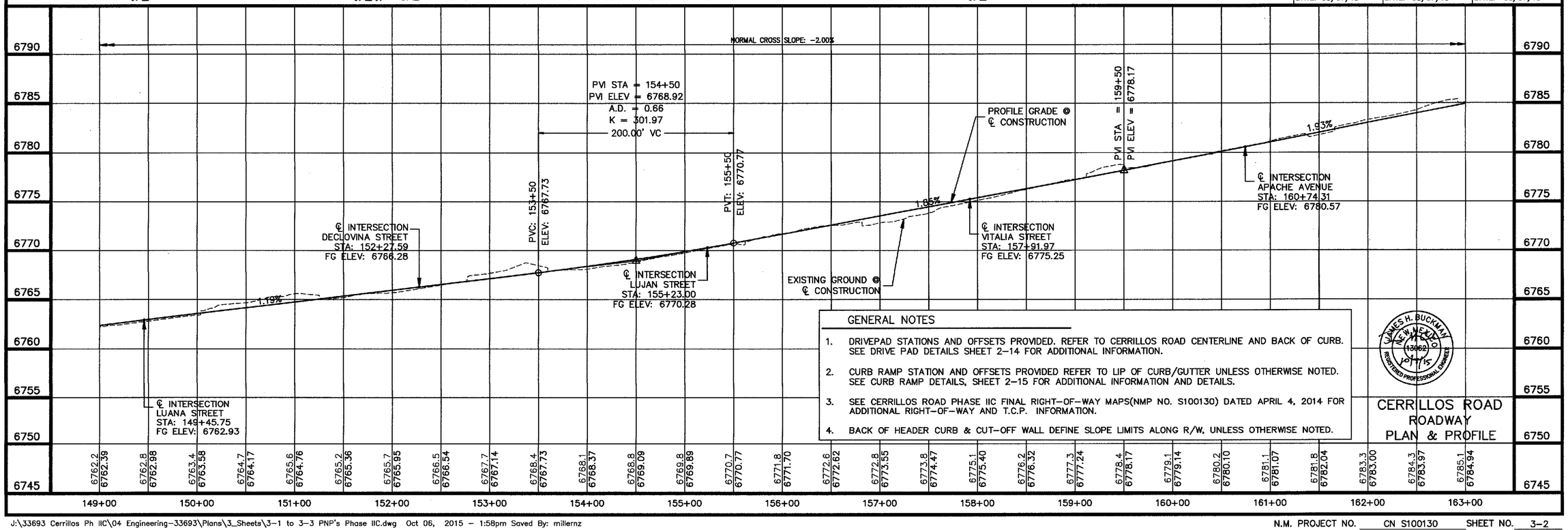

GENERAL NOTES

1. DRIVEPAD STATIONS AND OFFSETS PROVIDED. REFER TO CERRILLOS ROAD CENTERLINE AND BACK OF CURB. SEE DRIVE PAD DETAILS SHEET 2–14 FOR ADDITIONAL INFORMATION.
2. CURB RAMP STATION AND OFFSETS PROVIDED REFER TO LIP OF CURB/GUTTER UNLESS OTHERWISE NOTED. SEE CURB RAMP DETAILS, SHEET 2–15 FOR ADDITIONAL INFORMATION AND DETAILS.
3. SEE CERRILLOS ROAD PHASE IIC FINAL RIGHT–OF–WAY MAPS(NMP NO. S100130) DATED APRIL 4, 2014 FOR ADDITIONAL RIGHT–OF–WAY AND T.C.P. INFORMATION.
4. BACK OF HEADER CURB & CUT–OFF WALL DEFINE SLOPE LIMITS ALONG R/W, UNLESS OTHERWISE NOTED.

JAMES H. BUCKMAN NEW MEXICO 13062 REGISTERED PROFESSIONAL ENGINEER 10/7/15

CERRILLOS ROAD ROADWAY PLAN & PROFILE

PARSONS BRINCKERHOFF

CITY OF SANTA FE	SHEET
NEW MEXICO PROJECT NO.	NO.
CN S100130	3-3

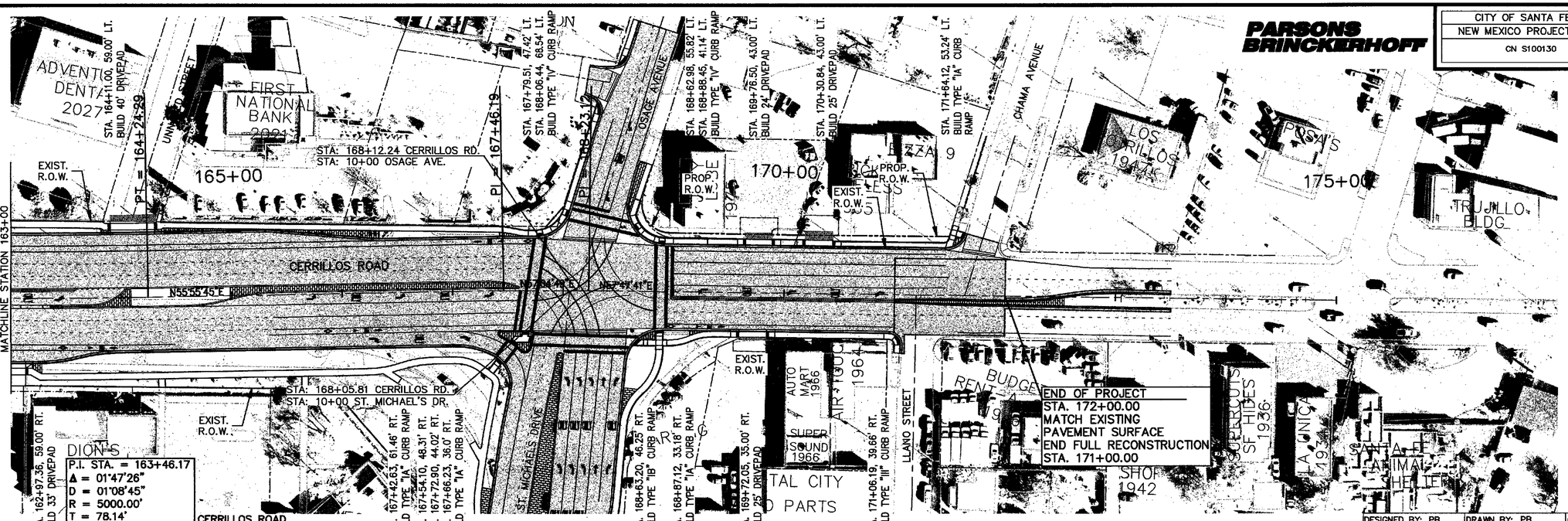

SCALE	
HORIZ.	1"=50'
VERT.	1"=5'

DESIGNED BY: PB	DRAWN BY: PB	CHECKED BY: JB
DATE: 08/07/15	DATE: 08/07/15	DATE: 08/07/15

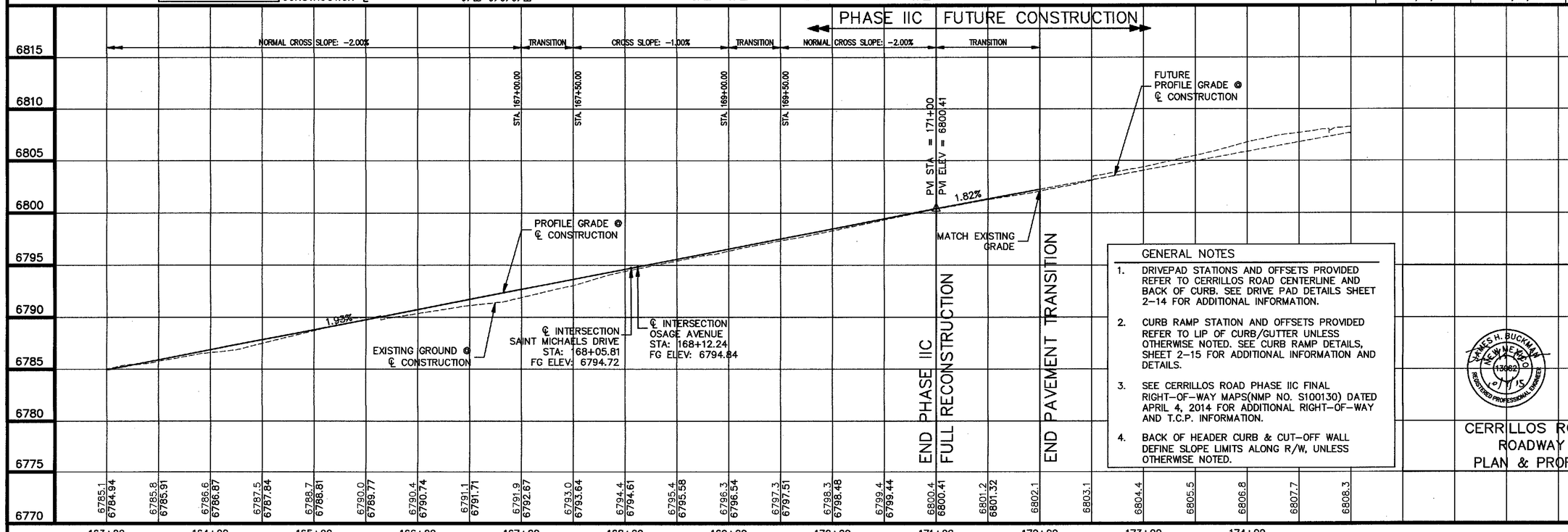

GENERAL NOTES

1. DRIVEPAD STATIONS AND OFFSETS PROVIDED REFER TO CERRILLOS ROAD CENTERLINE AND BACK OF CURB. SEE DRIVE PAD DETAILS SHEET 2-14 FOR ADDITIONAL INFORMATION.
2. CURB RAMP STATION AND OFFSETS PROVIDED REFER TO LIP OF CURB/GUTTER UNLESS OTHERWISE NOTED. SEE CURB RAMP DETAILS, SHEET 2-15 FOR ADDITIONAL INFORMATION AND DETAILS.
3. SEE CERRILLOS ROAD PHASE IIC FINAL RIGHT-OF-WAY MAPS(NMP NO. S100130) DATED APRIL 4, 2014 FOR ADDITIONAL RIGHT-OF-WAY AND T.C.P. INFORMATION.
4. BACK OF HEADER CURB & CUT-OFF WALL DEFINE SLOPE LIMITS ALONG R/W, UNLESS OTHERWISE NOTED.

JAMES H. BUCKMAN NEW MEXICO 13062 8/7/15 REGISTERED PROFESSIONAL ENGINEER

CERRILLOS ROAD ROADWAY PLAN & PROFILE

Bohannan ▲ Huston
Courtyard I 7500 Jefferson St. NE Albuquerque, NM 87109-4335
ENGINEERING ▲ SPATIAL DATA ▲ ADVANCED TECHNOLOGIES

CITY OF SANTA FE	SHEET NO.
NEW MEXICO PROJECT NO.	
CN S100130	

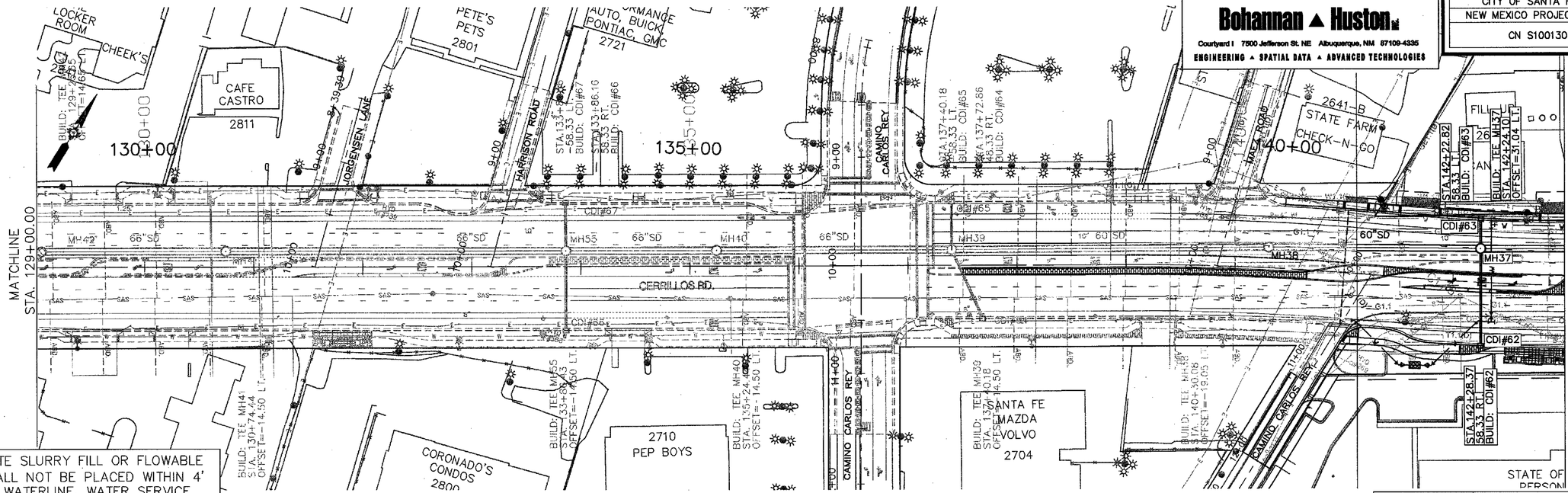

CONCRETE SLURRY FILL OR FLOWABLE FILL SHALL NOT BE PLACED WITHIN 4' OF ANY WATERLINE, WATER SERVICE LINE, OR SEWER LINE.

SCALE	
HORIZ.	1"=50'
VERT.	1"=5'

DESIGNED BY:	K.S.L	DRAWN BY:	L.S.M.	CHECKED BY:	A.E.
DATE:	08.10.15	DATE:	08.10.15	DATE:	08.10.15

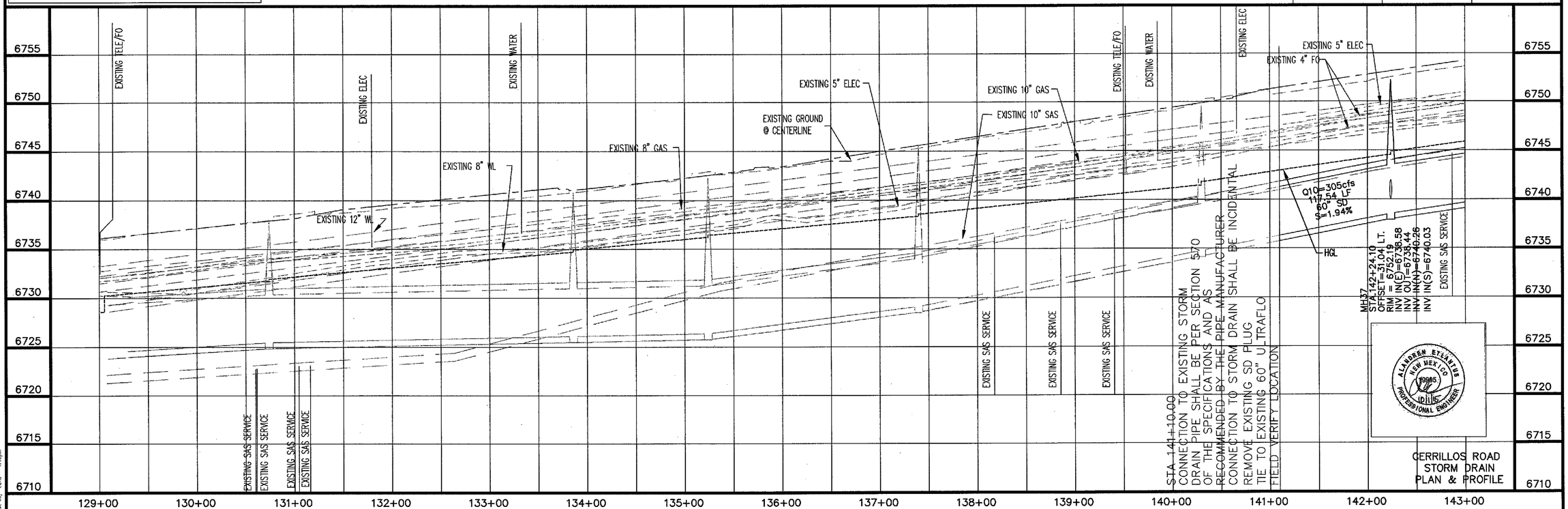

STA.141+10.00
CONNECTION TO EXISTING STORM DRAIN PIPE SHALL BE PER SECTION 570 OF THE SPECIFICATIONS AND AS RECOMMENDED BY THE PIPE MANUFACTURER
REMOVE EXISTING SD PLUG
TIE TO EXISTING 60" ULTRAFLO
FIELD VERIFY LOCATION

ALANDREW ETCHATS
NEW MEXICO
20985
PROFESSIONAL ENGINEER

CERRILLOS ROAD
STORM DRAIN
PLAN & PROFILE

N.M. PROJECT NO. CN S100130 SHEET NO. 3-4

P:\2014\0158\WK\Design\plans\Phase III\2014015808_PMP-01.dwg
Oct 01, 2015 - 1:16pm

Bohannan ▲ Huston
Courtyard I 7500 Jefferson St. NE Albuquerque, NM 87109-4335
ENGINEERING ▲ SPATIAL DATA ▲ ADVANCED TECHNOLOGIES

CITY OF SANTA FE	SHEET
NEW MEXICO PROJECT NO.	NO.
CN S100130	

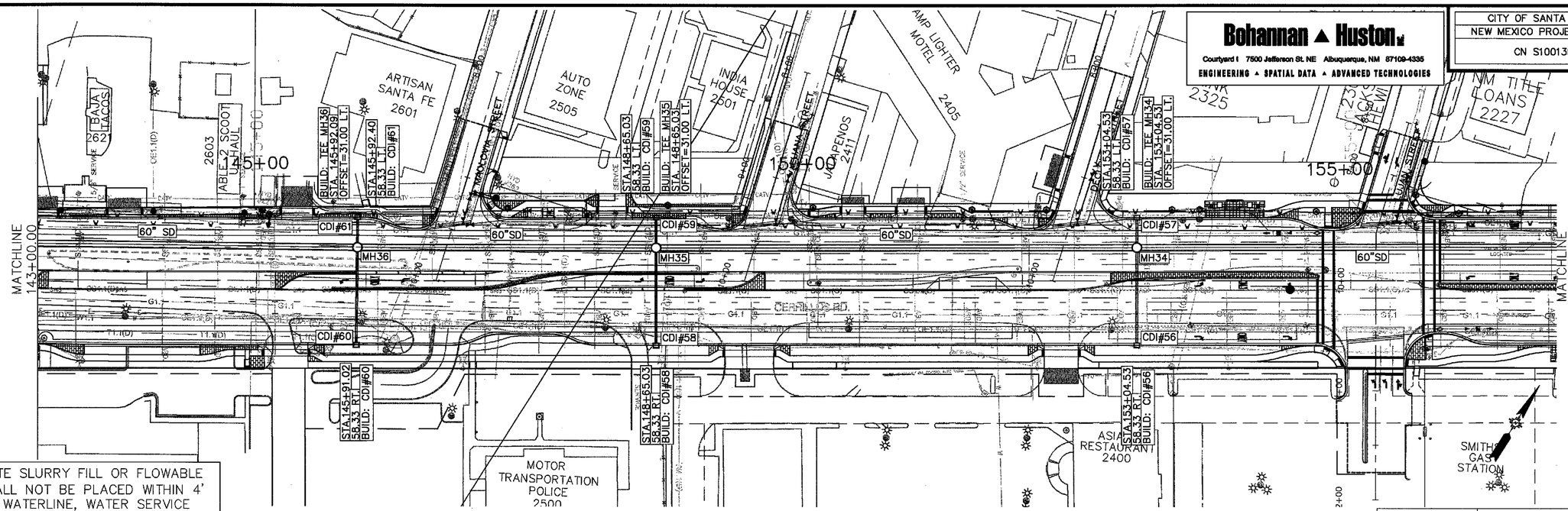

CONCRETE SLURRY FILL OR FLOWABLE FILL SHALL NOT BE PLACED WITHIN 4' OF ANY WATERLINE, WATER SERVICE LINE, OR SEWER LINE.

SCALE
HORIZ. 1"=50'
VERT. 1"=5'

DESIGNED BY: K.S.L	DRAWN BY: L.S.M.	CHECKED BY: A.E.
DATE: 08.10.15	DATE: 08.10.15	DATE: 08.10.15

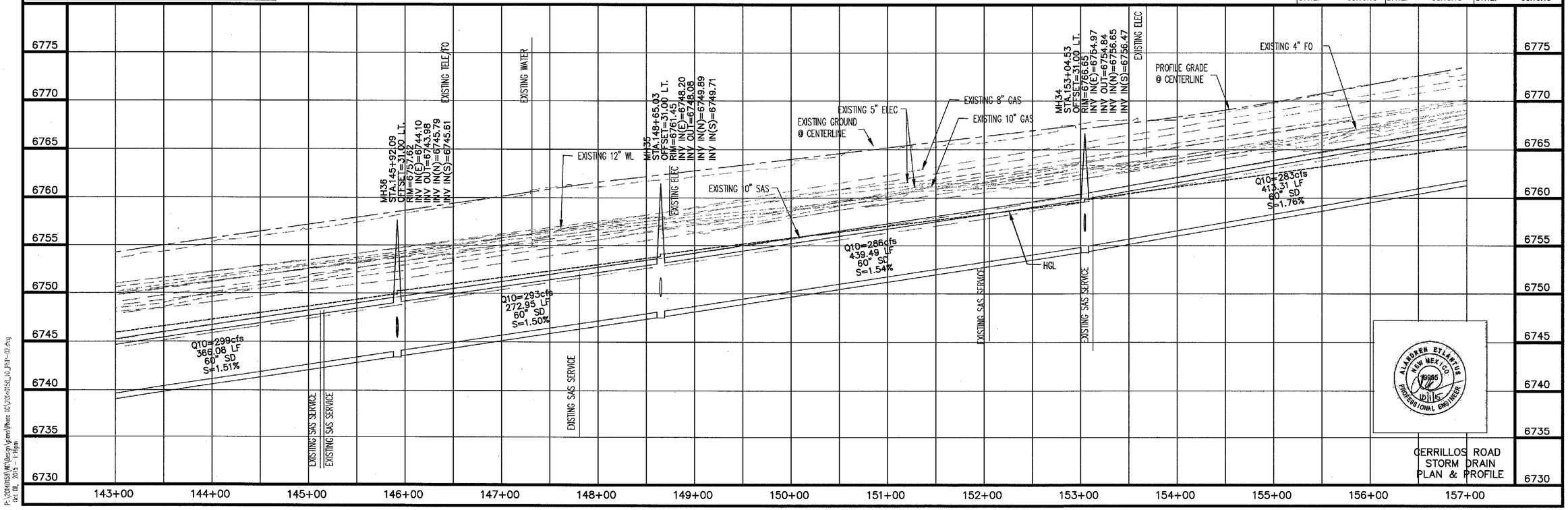

ALAN DREN ETLANTUS NEW MEXICO 19986 PROFESSIONAL ENGINEER

CERRILLOS ROAD
STORM DRAIN
PLAN & PROFILE

N.M. PROJECT NO. CN S100130 SHEET NO. 3-5

P:\2014\0158\WM\Design\grxm\Phase II\C2014-0158_10_PNP-32.dwg
Oct 01, 2015 - 1:15pm

Bohannan ▲ Huston
Courtyard I 7500 Jefferson St. NE Albuquerque, NM 87109-4335
ENGINEERING ▲ SPATIAL DATA ▲ ADVANCED TECHNOLOGIES

CITY OF SANTA FE	SHEET NO.
NEW MEXICO PROJECT NO.	
CN S100130	

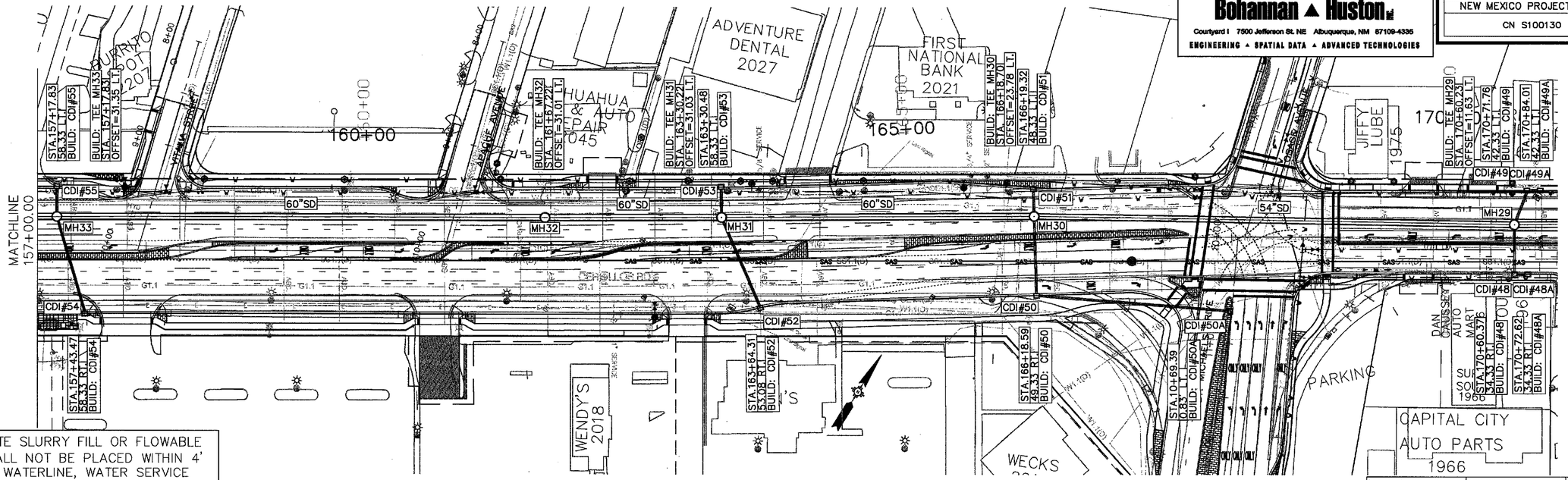

SCALE
HORIZ. 1"=50'
VERT. 1"=5'

DESIGNED BY: K.S.L	DRAWN BY: L.S.M.	CHECKED BY: A.E.
DATE: 08.10.15	DATE: 08.10.15	DATE: 08.10.15

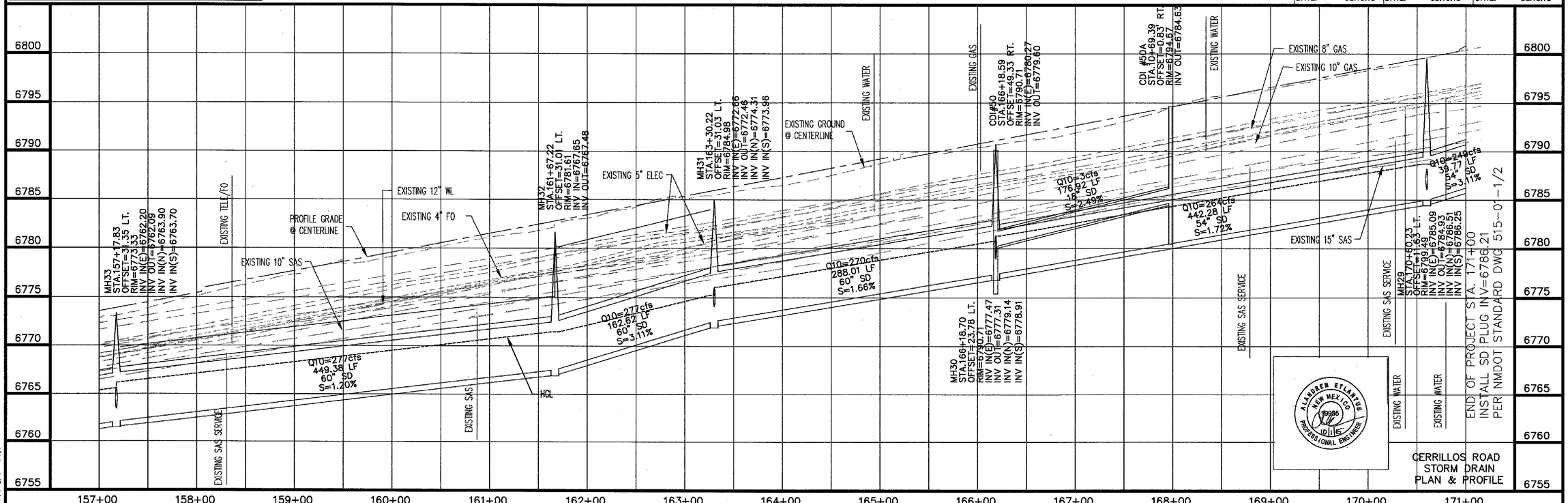

ALANREN ETLANTIS NEW MEXICO 19086 PROFESSIONAL ENGINEER

CERRILLOS ROAD
STORM DRAIN
PLAN & PROFILE

N.M. PROJECT NO. CN S100130 SHEET NO. 3-6

P:\2014\014158\NRV\Design\plans\Phase II\2014158_J1_HNP-03.dwg
Oct 01, 2015 - 1:46pm

PARSONS BRINCKERHOFF

CITY OF SANTA FE	SHEET
NEW MEXICO PROJECT NO.	NO.
CN S100130	3-7

PROTECT IN PLACE NOTE:
ITEMS IDENTIFIED AS PROTECT IN PLACE SHALL BE PROTECTED BY THE CONTRACTOR. ANY DAMAGES TO THESE ITEMS WILL BE THE RESPONSIBILITY OF THE CONTRACTOR TO REPAIR OR REPLACE SUCH ITEMS AS DIRECTED BY THE CITY PROJECT MANAGER AT NO ADDITIONAL COST TO THE CITY.

SIDEWALK CLEAR WIDTH:
4' MINIMUM CLEAR WIDTH FOR SIDEWALK MUST BE MET WHERE POWER POLES EXIST WITHIN NEW SIDEWALK PATH.

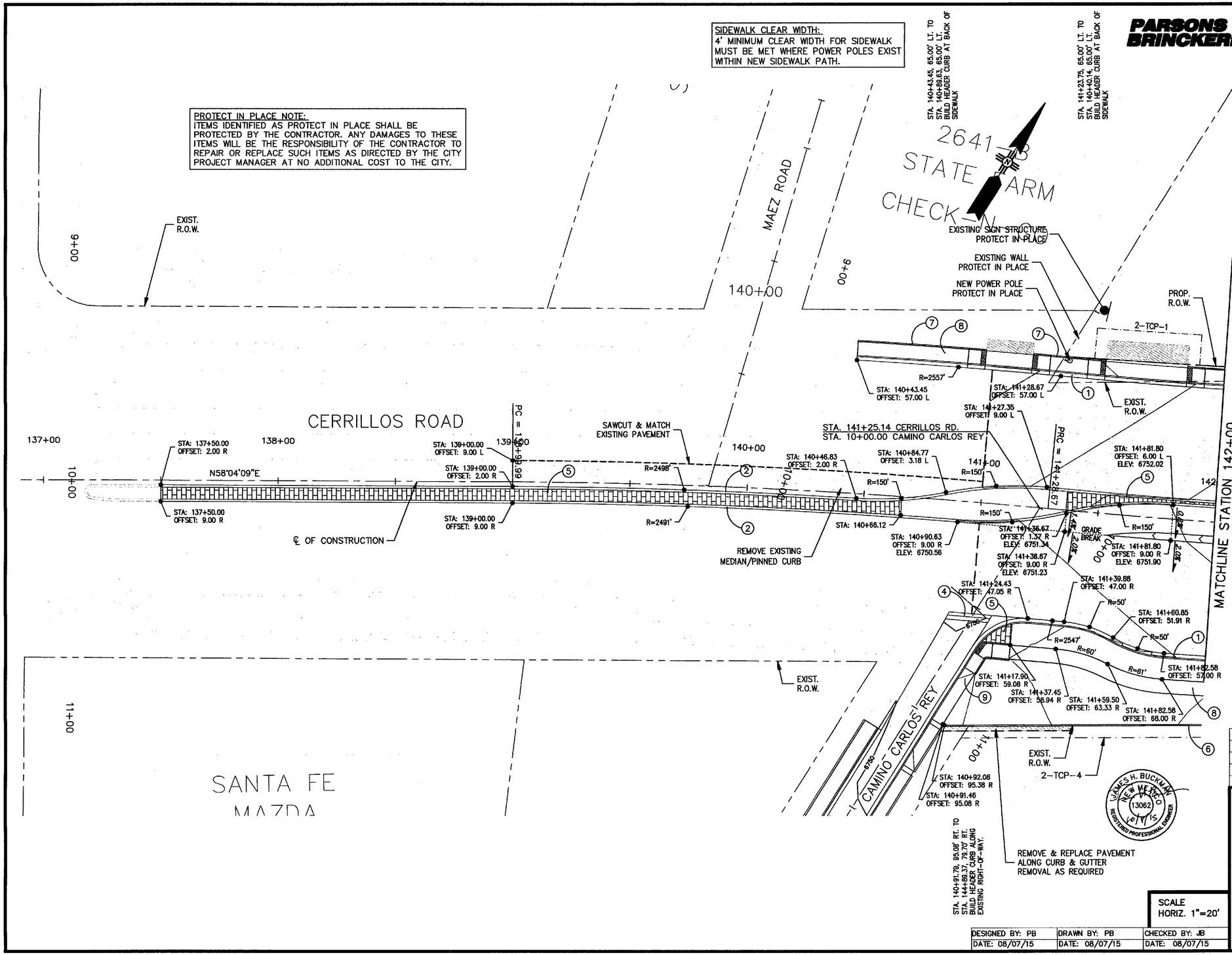

GENERAL NOTES

1. STATIONS AND OFFSETS PROVIDED REFER TO CERRILLOS ROAD CENTERLINE AND LIP OF CURB/GUTTER UNLESS OTHERWISE NOTED.
2. CURVE DATA PROVIDED REFERS TO LIP OF CURB/GUTTER UNLESS OTHERWISE NOTED.
3. CURB ELEVATIONS PROVIDED REFER TO LIP OF CURB/GUTTER UNLESS OTHERWISE NOTED.
4. SEE ROADWAY PLAN & PROFILE SHEETS 3-1 TO 3-3 FOR ADDITIONAL INFORMATION.
5. SEE SIDESTREET LAYOUT PLANS 3-14 TO 3-22 FOR ADDITIONAL INFORMATION.
6. SEE TURNOUT SECTIONS 4-1 TO 4-4 FOR LENGTH OF DRIVEPAD AND ASPHALT.
7. SEE CERRILLOS ROAD PHASE IIC FINAL RIGHT-OF-WAY MAPS (S100130) DATED APRIL 4, 2014 FOR ADDITIONAL RIGHT-OF-WAY AND TCP INFORMATION.
8. BACK OF HEADER CURB & CUT-OFF WALL DEFINE SLOPE LIMITS ALONG R/W, UNLESS OTHERWISE NOTED.

○ KEYED NOTES

1. BUILD CONCRETE BARRIER CURB & GUTTER TYPE B 6"X24", SEE SHEET 13-1 FOR DETAILS.
2. BUILD MODIFIED CONCRETE BARRIER CURB & GUTTER TYPE D 6"X12", SEE SHEET 2-14 FOR DETAILS.
3. BUILD CONCRETE BARRIER CURB & GUTTER TYPE B 6"X18", SEE SHEET 13-1 FOR DETAILS.
4. BUILD CONCRETE VALLEY GUTTER, SEE SHEET 13-1 FOR DETAILS.
5. BUILD MEDIAN CONCRETE PAVEMENT, SEE SHEET 12-7 FOR DETAILS.
6. BUILD HEADER CURB, SEE SHEET 2-14 FOR DETAILS.
7. BUILD CUT-OFF WALL, SEE SHEET 2-14 FOR DETAILS.
8. BUILD 6' WIDE CONCRETE SIDEWALK, SEE SHEET 13-1 FOR DETAILS.
9. BUILD 5' WIDE CONCRETE SIDEWALK, SEE SHEET 13-1 FOR DETAILS.
10. BUILD 4' WIDE CONCRETE SIDEWALK, SEE SHEET 13-1 FOR DETAILS.
11. BUILD CONCRETE MOUNTABLE CURB & GUTTER TYPE A 6"X24", SEE SHEET 13-1. FOR DETAILS.

NO.	DESCRIPTION	DATE	BY
3			
2			
1			

REVISIONS (OR CHANGE NOTICES)

JAMES H. BUCKMAN NEW MEXICO 13062 REGISTERED PROFESSIONAL ENGINEER

SCALE HORIZ. 1"=20'

DESIGNED BY: PB	DRAWN BY: PB	CHECKED BY: JB
DATE: 08/07/15	DATE: 08/07/15	DATE: 08/07/15

CITY OF SANTA FE

CERRILLOS ROAD PHASE IIC
CAMINO CARLOS REY TO LLANO STREET
SANTA FE COUNTY

CERRILLOS ROAD LAYOUT PLAN

PARSONS BRINCKERHOFF

CITY OF SANTA FE	SHEET
NEW MEXICO PROJECT NO.	NO.
CN S100130	3-8

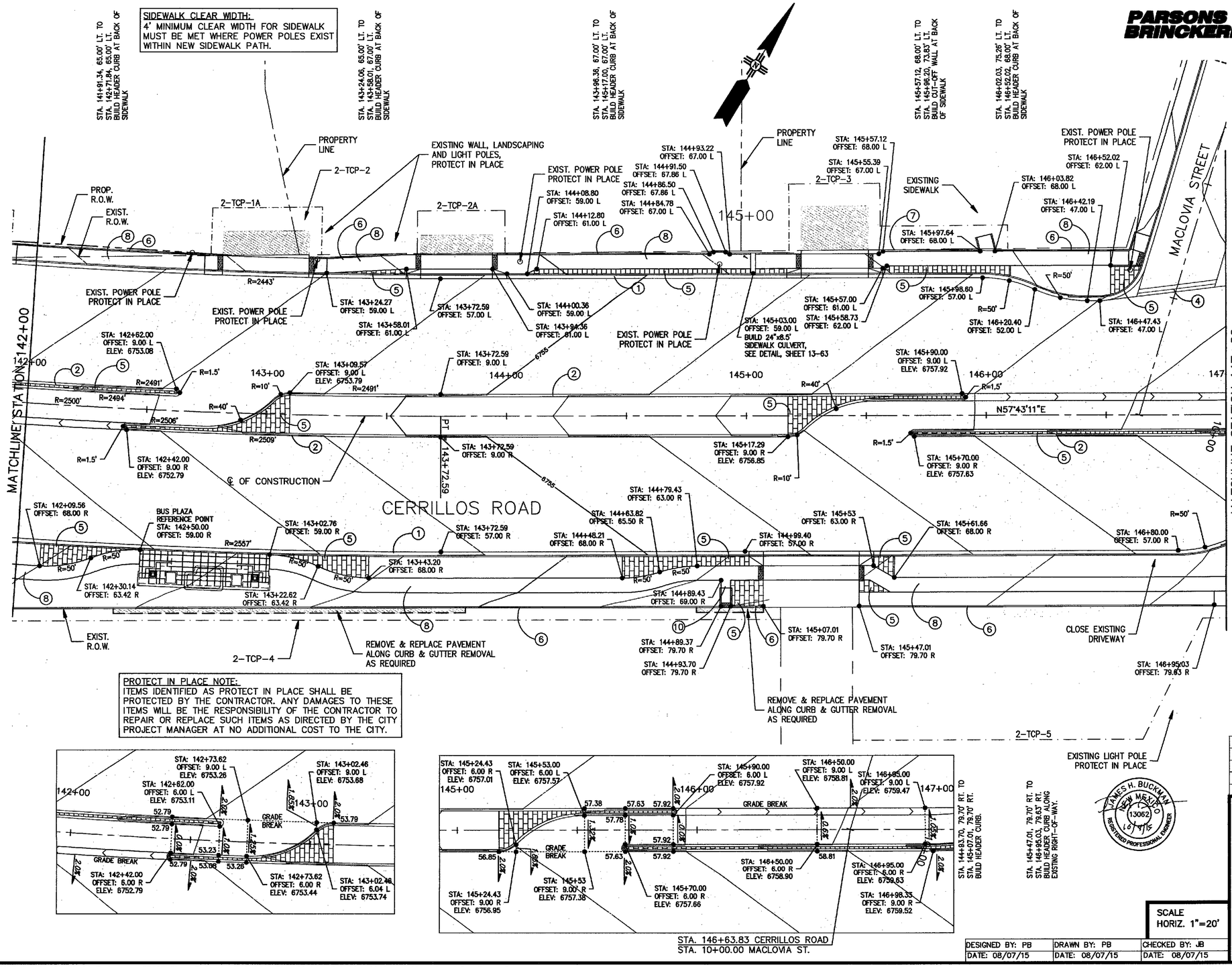

GENERAL NOTES

1. STATIONS AND OFFSETS PROVIDED REFER TO CERRILLOS ROAD CENTERLINE AND LIP OF CURB/GUTTER UNLESS OTHERWISE NOTED.
2. CURVE DATA PROVIDED REFERS TO LIP OF CURB/GUTTER UNLESS OTHERWISE NOTED.
3. CURB ELEVATIONS PROVIDED REFER TO LIP OF CURB/GUTTER UNLESS OTHERWISE NOTED.
4. SEE ROADWAY PLAN & PROFILE SHEETS 3-1 TO 3-3 FOR ADDITIONAL INFORMATION.
5. SEE SIDESTREET LAYOUT PLANS 3-14 TO 3-22 FOR ADDITIONAL INFORMATION.
6. SEE TURNOUT SECTIONS 4-1 TO 4-4 FOR LENGTH OF DRIVEPAD AND ASPHALT.
7. SEE CERRILLOS ROAD PHASE IIC FINAL RIGHT-OF-WAY MAPS (S100130) DATED APRIL 4, 2014 FOR ADDITIONAL RIGHT-OF-WAY AND TCP INFORMATION.
8. BACK OF HEADER CURB & CUT-OFF WALL DEFINE SLOPE LIMITS ALONG R/W, UNLESS OTHERWISE NOTED.

○ KEYED NOTES

1. BUILD CONCRETE BARRIER CURB & GUTTER TYPE B 6"X24", SEE SHEET 13-1 FOR DETAILS.
2. BUILD MODIFIED CONCRETE BARRIER CURB & GUTTER TYPE D 6"X12", SEE SHEET 2-14 FOR DETAILS.
3. BUILD CONCRETE BARRIER CURB & GUTTER TYPE B 6"X18", SEE SHEET 13-1 FOR DETAILS.
4. BUILD CONCRETE VALLEY GUTTER, SEE SHEET 13-1 FOR DETAILS.
5. BUILD MEDIAN CONCRETE PAVEMENT, SEE SHEET 12-7 FOR DETAILS.
6. BUILD HEADER CURB, SEE SHEET 2-14 FOR DETAILS.
7. BUILD CUT-OFF WALL, SEE SHEET 2-14 FOR DETAILS.
8. BUILD 6' WIDE CONCRETE SIDEWALK, SEE SHEET 13-1 FOR DETAILS.
9. BUILD 5' WIDE CONCRETE SIDEWALK, SEE SHEET 13-1 FOR DETAILS.
10. BUILD 4' WIDE CONCRETE SIDEWALK, SEE SHEET 13-1 FOR DETAILS.
11. BUILD CONCRETE MOUNTABLE CURB & GUTTER TYPE A 6"X24", SEE SHEET 13-1 FOR DETAILS.

NO.	DESCRIPTION	DATE	BY
3			
2			
1			

REVISIONS (OR CHANGE NOTICES)

JAMES H. BUCKMAN NEW MEXICO 13062 REGISTERED PROFESSIONAL ENGINEER 10/7/15

SCALE HORIZ. 1"=20'

CITY OF SANTA FE

CERRILLOS ROAD PHASE IIC
CAMINO CARLOS REY TO LLANO STREET
SANTA FE COUNTY

CERRILLOS ROAD LAYOUT PLAN

DESIGNED BY: PB	DRAWN BY: PB	CHECKED BY: JB
DATE: 08/07/15	DATE: 08/07/15	DATE: 08/07/15

PARSONS BRINCKERHOFF

CITY OF SANTA FE	SHEET
NEW MEXICO PROJECT NO.	NO.
CN S100130	3-9

PROTECT IN PLACE NOTE:
ITEMS IDENTIFIED AS PROTECT IN PLACE SHALL BE PROTECTED BY THE CONTRACTOR. ANY DAMAGES TO THESE ITEMS WILL BE THE RESPONSIBILITY OF THE CONTRACTOR TO REPAIR OR REPLACE SUCH ITEMS AS DIRECTED BY THE CITY PROJECT MANAGER AT NO ADDITIONAL COST TO THE CITY.

SIDEWALK CLEAR WIDTH:
4' MINIMUM CLEAR WIDTH FOR SIDEWALK MUST BE MET WHERE POWER POLES EXIST WITHIN NEW SIDEWALK PATH.

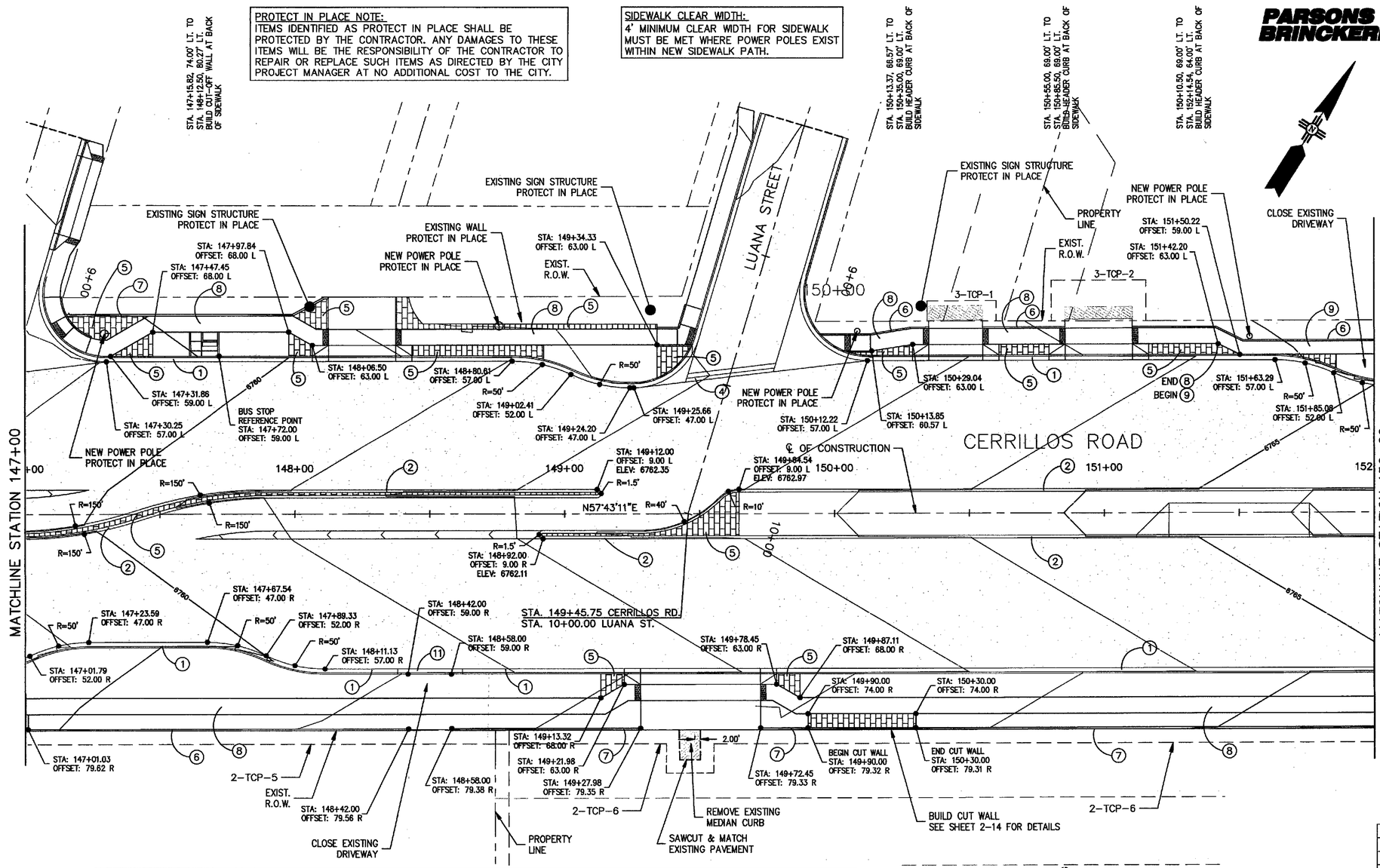

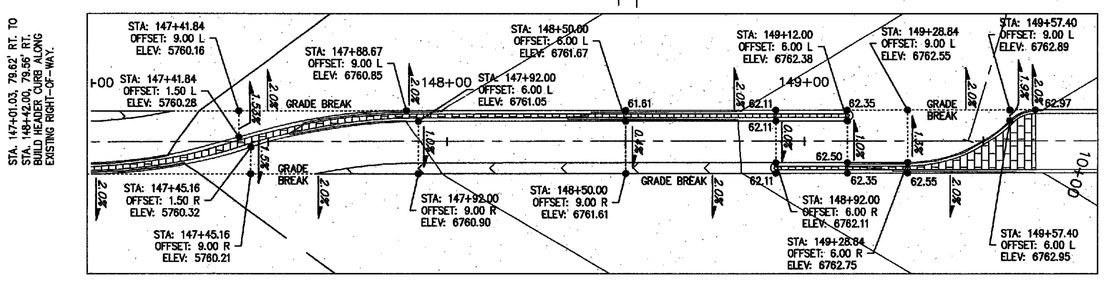

GENERAL NOTES

1. STATIONS AND OFFSETS PROVIDED REFER TO CERRILLOS ROAD CENTERLINE AND LIP OF CURB/GUTTER UNLESS OTHERWISE NOTED.
2. CURVE DATA PROVIDED REFERS TO LIP OF CURB/GUTTER UNLESS OTHERWISE NOTED.
3. CURB ELEVATIONS PROVIDED REFER TO LIP OF CURB/GUTTER UNLESS OTHERWISE NOTED.
4. SEE ROADWAY PLAN & PROFILE SHEETS 3-1 TO 3-3 FOR ADDITIONAL INFORMATION.
5. SEE SIDESTREET LAYOUT PLANS 3-14 TO 3-22 FOR ADDITIONAL INFORMATION.
6. SEE TURNOUT SECTIONS 4-1 TO 4-4 FOR LENGTH OF DRIVEPAD AND ASPHALT.
7. SEE CERRILLOS ROAD PHASE IIC FINAL RIGHT-OF-WAY MAPS (S100130) DATED APRIL 4, 2014 FOR ADDITIONAL RIGHT-OF-WAY AND TCP INFORMATION.
8. BACK OF HEADER CURB & CUT-OFF WALL DEFINE SLOPE LIMITS ALONG R/W, UNLESS OTHERWISE NOTED.

○ KEYED NOTES

1. BUILD CONCRETE BARRIER CURB & GUTTER TYPE B 6"X24", SEE SHEET 13-1 FOR DETAILS.
2. BUILD MODIFIED CONCRETE BARRIER CURB & GUTTER TYPE D 6"X12", SEE SHEET 2-14 FOR DETAILS.
3. BUILD CONCRETE BARRIER CURB & GUTTER TYPE B 6"X18", SEE SHEET 13-1 FOR DETAILS.
4. BUILD CONCRETE VALLEY GUTTER, SEE SHEET 13-1 FOR DETAILS.
5. BUILD MEDIAN CONCRETE PAVEMENT, SEE SHEET 12-7 FOR DETAILS.
6. BUILD HEADER CURB, SEE SHEET 2-14 FOR DETAILS.
7. BUILD CUT-OFF WALL, SEE SHEET 2-14 FOR DETAILS.
8. BUILD 6' WIDE CONCRETE SIDEWALK, SEE SHEET 13-1 FOR DETAILS.
9. BUILD 5' WIDE CONCRETE SIDEWALK, SEE SHEET 13-1 FOR DETAILS.
10. BUILD 4' WIDE CONCRETE SIDEWALK, SEE SHEET 13-1 FOR DETAILS.
11. BUILD CONCRETE MOUNTABLE CURB & GUTTER TYPE A 6"X24", SEE SHEET 13-1 FOR DETAILS.

NO.	DESCRIPTION	DATE	BY
3			
2			
1			

REVISIONS (OR CHANGE NOTICES)

JAMES H. BUCKMAN NEW MEXICO 13062 REGISTERED PROFESSIONAL ENGINEER 10/7/15

SCALE HORIZ. 1"=20'

DESIGNED BY: PB	DRAWN BY: PB	CHECKED BY: JB
DATE: 08/07/15	DATE: 08/07/15	DATE: 08/07/15

CITY OF SANTA FE

CERRILLOS ROAD PHASE IIC
CAMINO CARLOS REY TO LLANO STREET
SANTA FE COUNTY

CERRILLOS ROAD LAYOUT PLAN

PROTECT IN PLACE NOTE:
ITEMS IDENTIFIED AS PROTECT IN PLACE SHALL BE PROTECTED BY THE CONTRACTOR. ANY DAMAGES TO THESE ITEMS WILL BE THE RESPONSIBILITY OF THE CONTRACTOR TO REPAIR OR REPLACE SUCH ITEMS AS DIRECTED BY THE CITY PROJECT MANAGER AT NO ADDITIONAL COST TO THE CITY.

SIDEWALK CLEAR WIDTH:
4' MINIMUM CLEAR WIDTH FOR SIDEWALK MUST BE MET WHERE POWER POLES EXIST WITHIN NEW SIDEWALK PATH.

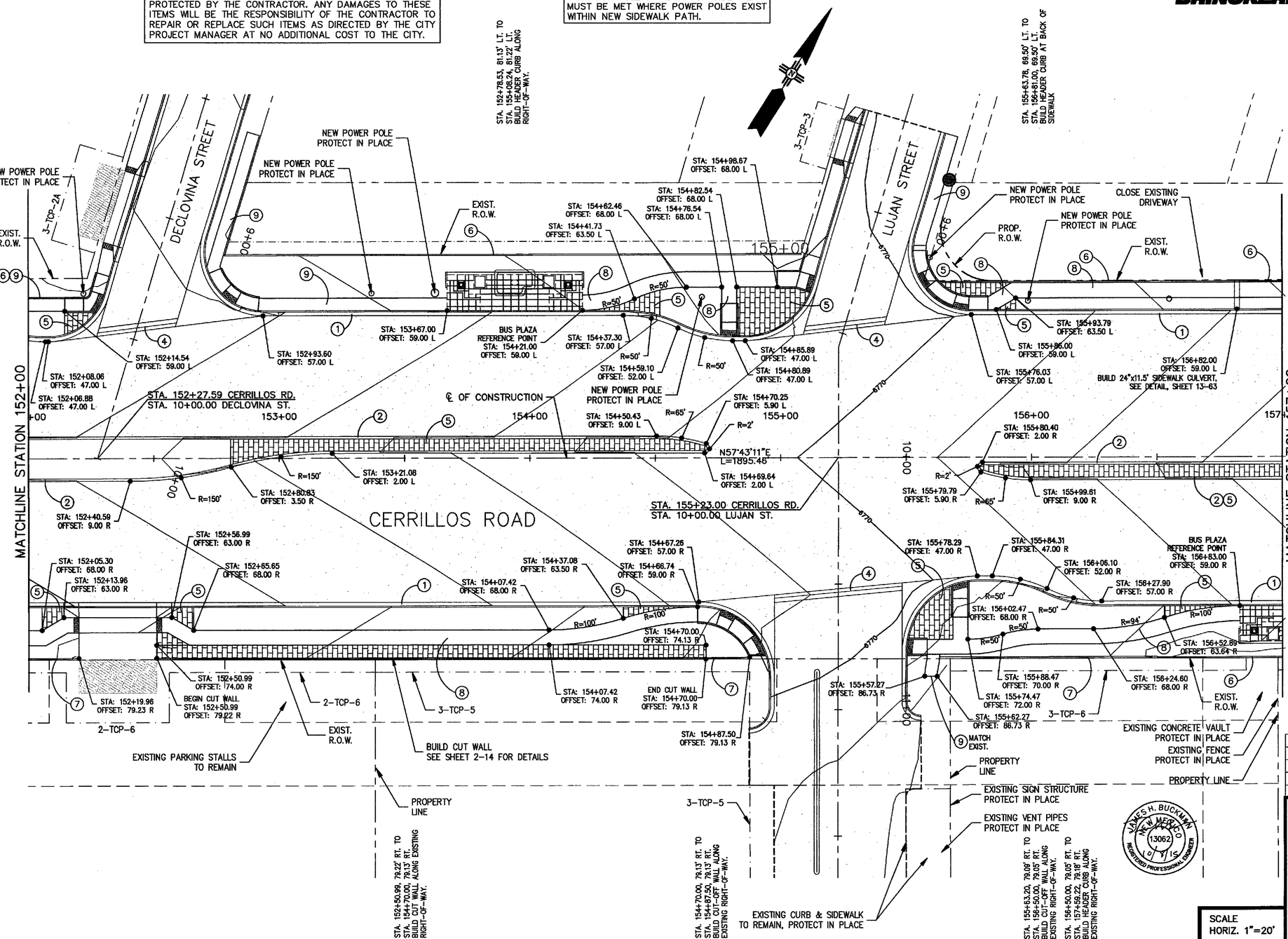

PARSONS BRINCKERHOFF

CITY OF SANTA FE	SHEET
NEW MEXICO PROJECT NO.	NO.
CN S100130	3-10

GENERAL NOTES

1. STATIONS AND OFFSETS PROVIDED REFER TO CERRILLOS ROAD CENTERLINE AND LIP OF CURB/GUTTER UNLESS OTHERWISE NOTED.
2. CURVE DATA PROVIDED REFERS TO LIP OF CURB/GUTTER UNLESS OTHERWISE NOTED.
3. CURB ELEVATIONS PROVIDED REFER TO LIP OF CURB/GUTTER UNLESS OTHERWISE NOTED.
4. SEE ROADWAY PLAN & PROFILE SHEETS 3-1 TO 3-3 FOR ADDITIONAL INFORMATION.
5. SEE SIDESTREET LAYOUT PLANS 3-14 TO 3-22 FOR ADDITIONAL INFORMATION.
6. SEE TURNOUT SECTIONS 4-1 TO 4-4 FOR LENGTH OF DRIVEPAD AND ASPHALT.
7. SEE CERRILLOS ROAD PHASE IIC FINAL RIGHT-OF-WAY MAPS (S100130) DATED APRIL 4, 2014 FOR ADDITIONAL RIGHT-OF-WAY AND TCP INFORMATION.
8. BACK OF HEADER CURB & CUT-OFF WALL DEFINE SLOPE LIMITS ALONG R/W, UNLESS OTHERWISE NOTED.

○ KEYED NOTES

1. BUILD CONCRETE BARRIER CURB & GUTTER TYPE B 6"X24", SEE SHEET 13-1 FOR DETAILS.
2. BUILD MODIFIED CONCRETE BARRIER CURB & GUTTER TYPE D 6"X12", SEE SHEET 2-14 FOR DETAILS.
3. BUILD CONCRETE BARRIER CURB & GUTTER TYPE B 6"X18", SEE SHEET 13-1 FOR DETAILS.
4. BUILD CONCRETE VALLEY GUTTER, SEE SHEET 13-1 FOR DETAILS.
5. BUILD MEDIAN CONCRETE PAVEMENT, SEE SHEET 12-7 FOR DETAILS.
6. BUILD HEADER CURB, SEE SHEET 2-14 FOR DETAILS.
7. BUILD CUT-OFF WALL, SEE SHEET 2-14 FOR DETAILS.
8. BUILD 6' WIDE CONCRETE SIDEWALK, SEE SHEET 13-1 FOR DETAILS.
9. BUILD 5' WIDE CONCRETE SIDEWALK, SEE SHEET 13-1 FOR DETAILS.
10. BUILD 4' WIDE CONCRETE SIDEWALK, SEE SHEET 13-1 FOR DETAILS.
11. BUILD CONCRETE MOUNTABLE CURB & GUTTER TYPE A 6"X24", SEE SHEET 13-1 FOR DETAILS.

NO.	DESCRIPTION	DATE	BY
3			
2			
1			

REVISIONS (OR CHANGE NOTICES)

JAMES H. BUCKMAN NEW MEXICO 13062 REGISTERED PROFESSIONAL ENGINEER 10/9/15

SCALE HORIZ. 1"=20'

DESIGNED BY: PB	DRAWN BY: PB	CHECKED BY: JB
DATE: 08/07/15	DATE: 08/07/15	DATE: 08/07/15

CITY OF SANTA FE

CERRILLOS ROAD PHASE IIC
CAMINO CARLOS REY TO LLANO STREET
SANTA FE COUNTY

CERRILLOS ROAD LAYOUT PLAN

CITY OF SANTA FE	SHEET
NEW MEXICO PROJECT NO.	NO.
CN S100130	3–11

PARSONS BRINCKERHOFF

PROTECT IN PLACE NOTE:
ITEMS IDENTIFIED AS PROTECT IN PLACE SHALL BE PROTECTED BY THE CONTRACTOR. ANY DAMAGES TO THESE ITEMS WILL BE THE RESPONSIBILITY OF THE CONTRACTOR TO REPAIR OR REPLACE SUCH ITEMS AS DIRECTED BY THE CITY PROJECT MANAGER AT NO ADDITIONAL COST TO THE CITY.

SIDEWALK CLEAR WIDTH:
4' MINIMUM CLEAR WIDTH FOR SIDEWALK MUST BE MET WHERE POWER POLES EXIST WITHIN NEW SIDEWALK PATH.

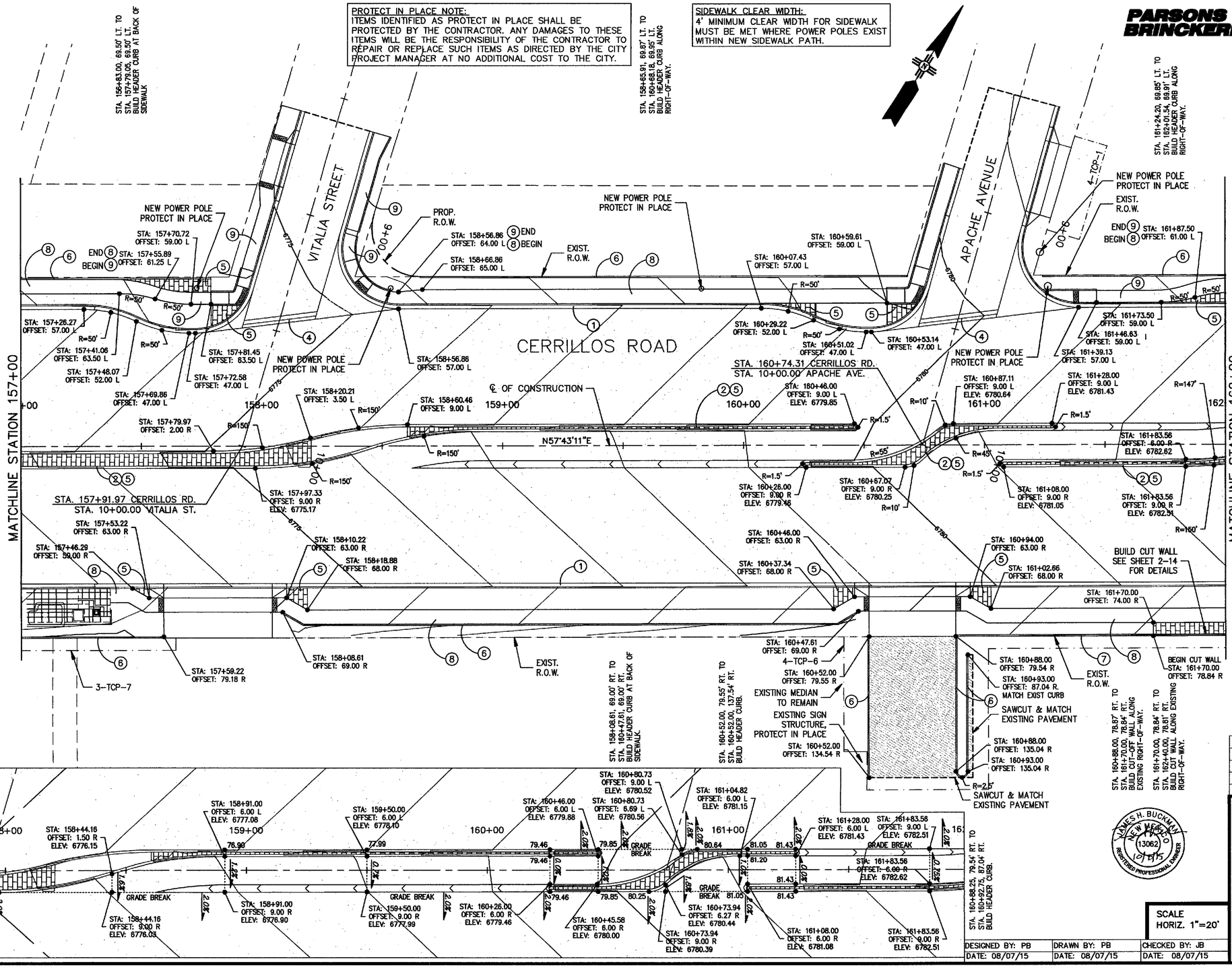

GENERAL NOTES

1. STATIONS AND OFFSETS PROVIDED REFER TO CERRILLOS ROAD CENTERLINE AND LIP OF CURB/GUTTER UNLESS OTHERWISE NOTED.
2. CURVE DATA PROVIDED REFERS TO LIP OF CURB/GUTTER UNLESS OTHERWISE NOTED.
3. CURB ELEVATIONS PROVIDED REFER TO LIP OF CURB/GUTTER UNLESS OTHERWISE NOTED.
4. SEE ROADWAY PLAN & PROFILE SHEETS 3–1 TO 3–3 FOR ADDITIONAL INFORMATION.
5. SEE SIDESTREET LAYOUT PLANS 3–14 TO 3–22 FOR ADDITIONAL INFORMATION.
6. SEE TURNOUT SECTIONS 4–1 TO 4–4 FOR LENGTH OF DRIVEPAD AND ASPHALT.
7. SEE CERRILLOS ROAD PHASE IIC FINAL RIGHT–OF–WAY MAPS (S100130) DATED APRIL 4, 2014 FOR ADDITIONAL RIGHT–OF–WAY AND TCP INFORMATION.
8. BACK OF HEADER CURB & CUT–OFF WALL DEFINE SLOPE LIMITS ALONG R/W, UNLESS OTHERWISE NOTED.

○ KEYED NOTES

1. BUILD CONCRETE BARRIER CURB & GUTTER TYPE B 6"X24", SEE SHEET 13–1 FOR DETAILS.
2. BUILD MODIFIED CONCRETE BARRIER CURB & GUTTER TYPE D 6"X12", SEE SHEET 2–14 FOR DETAILS.
3. BUILD CONCRETE BARRIER CURB & GUTTER TYPE B 6"X18", SEE SHEET 13–1 FOR DETAILS.
4. BUILD CONCRETE VALLEY GUTTER, SEE SHEET 13–1 FOR DETAILS.
5. BUILD MEDIAN CONCRETE PAVEMENT, SEE SHEET 12–7 FOR DETAILS.
6. BUILD HEADER CURB, SEE SHEET 2–14 FOR DETAILS.
7. BUILD CUT–OFF WALL, SEE SHEET 2–14 FOR DETAILS.
8. BUILD 6' WIDE CONCRETE SIDEWALK, SEE SHEET 13–1 FOR DETAILS.
9. BUILD 5' WIDE CONCRETE SIDEWALK, SEE SHEET 13–1 FOR DETAILS.
10. BUILD 4' WIDE CONCRETE SIDEWALK, SEE SHEET 13–1 FOR DETAILS.
11. BUILD CONCRETE MOUNTABLE CURB & GUTTER TYPE A 6"X24", SEE SHEET 13–1 FOR DETAILS.

NO.	DESCRIPTION	DATE	BY
3			
2			
1			

REVISIONS (OR CHANGE NOTICES)

JAMES H. BUCKMAN NEW MEXICO 13062 REGISTERED PROFESSIONAL ENGINEER

SCALE HORIZ. 1"=20'

DESIGNED BY: PB	DRAWN BY: PB	CHECKED BY: JB
DATE: 08/07/15	DATE: 08/07/15	DATE: 08/07/15

CITY OF SANTA FE

CERRILLOS ROAD PHASE IIC
CAMINO CARLOS REY TO
LLANO STREET
SANTA FE COUNTY

CERRILLOS ROAD LAYOUT PLAN

J:\33693 Cerrillos Ph IIC\04 Engineering–33693\Plans\3_Sheets\3–11 Rdwy Plan_05.dwg Oct 06, 2015 – 1:54pm Saved By: JimenezR

N.M. PROJECT NO. CN S100130 SHEET NO. 3–11

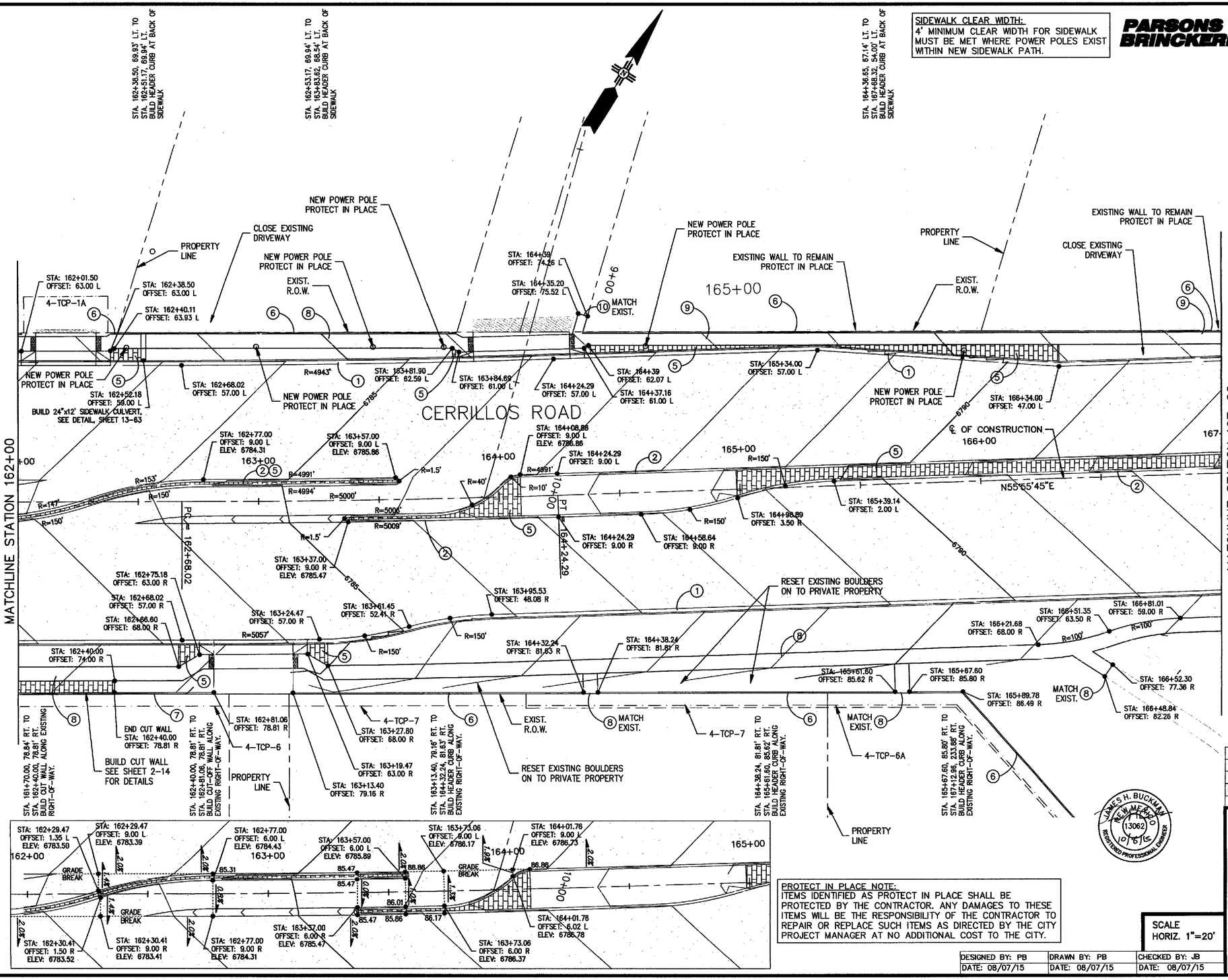

PARSONS BRINCKERHOFF

CITY OF SANTA FE	SHEET
NEW MEXICO PROJECT NO.	NO.
CN S100130	3-12

GENERAL NOTES

1. STATIONS AND OFFSETS PROVIDED REFER TO CERRILLOS ROAD CENTERLINE AND LIP OF CURB/GUTTER UNLESS OTHERWISE NOTED.
2. CURVE DATA PROVIDED REFERS TO LIP OF CURB/GUTTER UNLESS OTHERWISE NOTED.
3. CURB ELEVATIONS PROVIDED REFER TO LIP OF CURB/GUTTER UNLESS OTHERWISE NOTED.
4. SEE ROADWAY PLAN & PROFILE SHEETS 3-1 TO 3-3 FOR ADDITIONAL INFORMATION.
5. SEE SIDESTREET LAYOUT PLANS 3-14 TO 3-22 FOR ADDITIONAL INFORMATION.
6. SEE TURNOUT SECTIONS 4-1 TO 4-4 FOR LENGTH OF DRIVEPAD AND ASPHALT.
7. SEE CERRILLOS ROAD PHASE IIC FINAL RIGHT-OF-WAY MAPS (S100130) DATED APRIL 4, 2014 FOR ADDITIONAL RIGHT-OF-WAY AND TCP INFORMATION.
8. BACK OF HEADER CURB & CUT-OFF WALL DEFINE SLOPE LIMITS ALONG R/W, UNLESS OTHERWISE NOTED.

○ KEYED NOTES

1. BUILD CONCRETE BARRIER CURB & GUTTER TYPE B 6"X24", SEE SHEET 13-1 FOR DETAILS.
2. BUILD MODIFIED CONCRETE BARRIER CURB & GUTTER TYPE D 6"X12", SEE SHEET 2-14 FOR DETAILS.
3. BUILD CONCRETE BARRIER CURB & GUTTER TYPE B 6"X18", SEE SHEET 13-1 FOR DETAILS.
4. BUILD CONCRETE VALLEY GUTTER, SEE SHEET 13-1 FOR DETAILS.
5. BUILD MEDIAN CONCRETE PAVEMENT, SEE SHEET 12-7 FOR DETAILS.
6. BUILD HEADER CURB, SEE SHEET 2-14 FOR DETAILS.
7. BUILD CUT-OFF WALL, SEE SHEET 2-14 FOR DETAILS.
8. BUILD 6' WIDE CONCRETE SIDEWALK, SEE SHEET 13-1 FOR DETAILS.
9. BUILD 5' WIDE CONCRETE SIDEWALK, SEE SHEET 13-1 FOR DETAILS.
10. BUILD 4' WIDE CONCRETE SIDEWALK, SEE SHEET 13-1 FOR DETAILS.
11. BUILD CONCRETE MOUNTABLE CURB & GUTTER TYPE A 6"X24", SEE SHEET 13-1 FOR DETAILS.

NO.	DESCRIPTION	DATE	BY
3			
2			
1			

REVISIONS (OR CHANGE NOTICES)

JAMES H. BUCKMAN NEW MEXICO 13062 REGISTERED PROFESSIONAL ENGINEER 10/6/15

CITY OF SANTA FE

CERRILLOS ROAD PHASE IIC
CAMINO CARLOS REY TO
LLANO STREET
SANTA FE COUNTY

CERRILLOS ROAD LAYOUT PLAN

PARSONS BRINCKERHOFF

CITY OF SANTA FE	SHEET
NEW MEXICO PROJECT NO.	NO.
CN S100130	3–13

PROTECT IN PLACE NOTE:
ITEMS IDENTIFIED AS PROTECT IN PLACE SHALL BE PROTECTED BY THE CONTRACTOR. ANY DAMAGES TO THESE ITEMS WILL BE THE RESPONSIBILITY OF THE CONTRACTOR TO REPAIR OR REPLACE SUCH ITEMS AS DIRECTED BY THE CITY PROJECT MANAGER AT NO ADDITIONAL COST TO THE CITY.

SIDEWALK CLEAR WIDTH:
4' MINIMUM CLEAR WIDTH FOR SIDEWALK MUST BE MET WHERE POWER POLES EXIST WITHIN NEW SIDEWALK PATH.

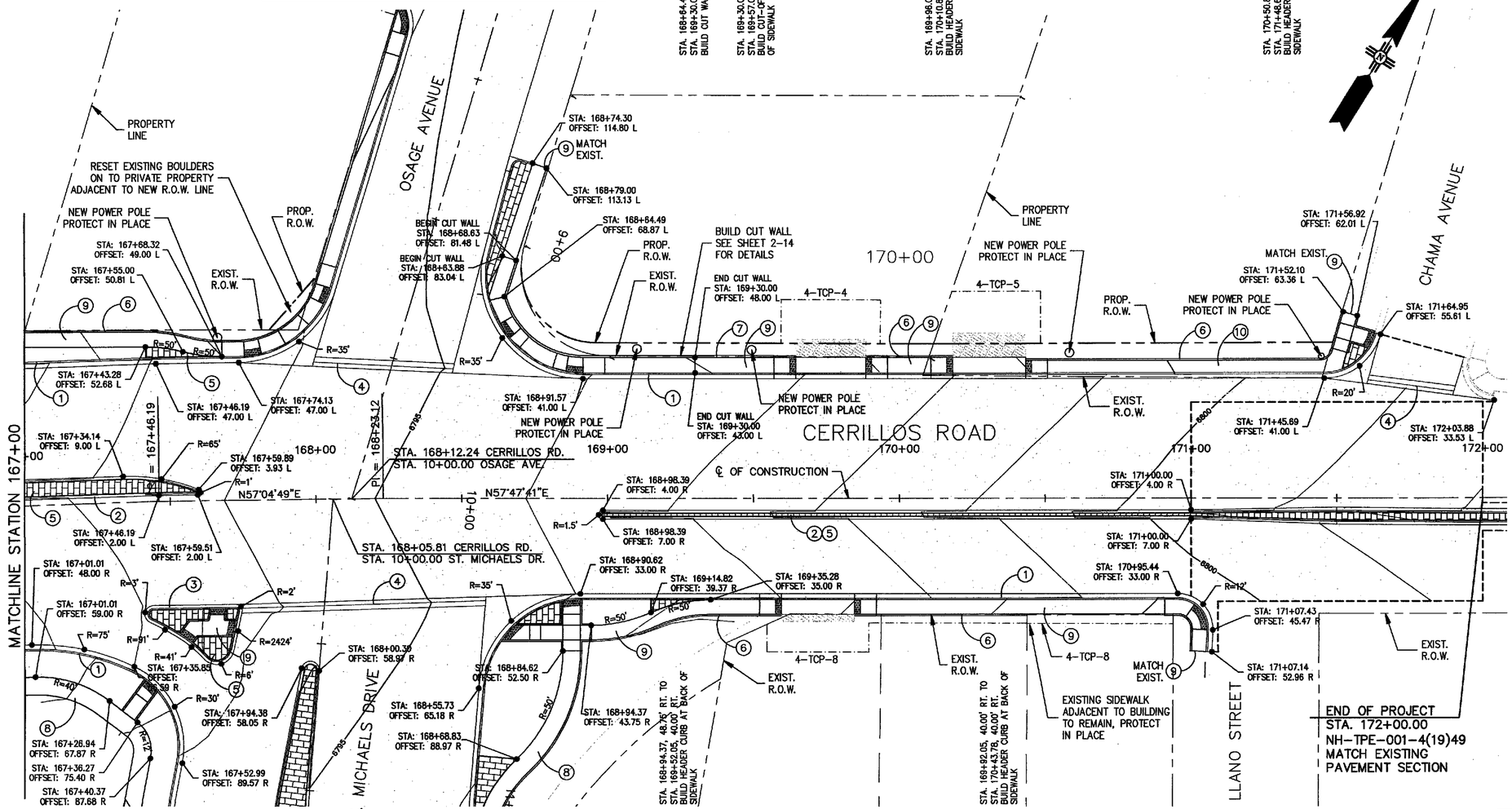

GENERAL NOTES

1. STATIONS AND OFFSETS PROVIDED REFER TO CERRILLOS ROAD CENTERLINE AND LIP OF CURB/GUTTER UNLESS OTHERWISE NOTED.
2. CURVE DATA PROVIDED REFERS TO LIP OF CURB/GUTTER UNLESS OTHERWISE NOTED.
3. CURB ELEVATIONS PROVIDED REFER TO LIP OF CURB/GUTTER UNLESS OTHERWISE NOTED.
4. SEE ROADWAY PLAN & PROFILE SHEETS 3–1 TO 3–3 FOR ADDITIONAL INFORMATION.
5. SEE SIDESTREET LAYOUT PLANS 3–14 TO 3–22 FOR ADDITIONAL INFORMATION.
6. SEE TURNOUT SECTIONS 4–1 TO 4–4 FOR LENGTH OF DRIVEPAD AND ASPHALT.
7. SEE CERRILLOS ROAD PHASE IIC FINAL RIGHT–OF–WAY MAPS (S100130) DATED APRIL 4, 2014 FOR ADDITIONAL RIGHT–OF–WAY AND TCP INFORMATION.
8. BACK OF HEADER CURB & CUT–OFF WALL DEFINE SLOPE LIMITS ALONG R/W, UNLESS OTHERWISE NOTED.

○ KEYED NOTES

1. BUILD CONCRETE BARRIER CURB & GUTTER TYPE B 6"X24", SEE SHEET 13–1 FOR DETAILS.
2. BUILD MODIFIED CONCRETE BARRIER CURB & GUTTER TYPE D 6"X12", SEE SHEET 2–14 FOR DETAILS.
3. BUILD CONCRETE BARRIER CURB & GUTTER TYPE B 6"X18", SEE SHEET 13–1 FOR DETAILS.
4. BUILD CONCRETE VALLEY GUTTER, SEE SHEET 13–1 FOR DETAILS.
5. BUILD MEDIAN CONCRETE PAVEMENT, SEE SHEET 12–7 FOR DETAILS.
6. BUILD HEADER CURB, SEE SHEET 2–14 FOR DETAILS.
7. BUILD CUT–OFF WALL, SEE SHEET 2–14 FOR DETAILS.
8. BUILD 6' WIDE CONCRETE SIDEWALK, SEE SHEET 13–1 FOR DETAILS.
9. BUILD 5' WIDE CONCRETE SIDEWALK, SEE SHEET 13–1 FOR DETAILS.
10. BUILD 4' WIDE CONCRETE SIDEWALK, SEE SHEET 13–1 FOR DETAILS.
11. BUILD CONCRETE MOUNTABLE CURB & GUTTER TYPE A 6"X24", SEE SHEET 13–1 FOR DETAILS.

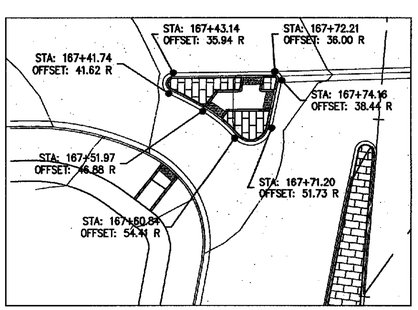

MEDIAN ISLAND LAYOUT DATA

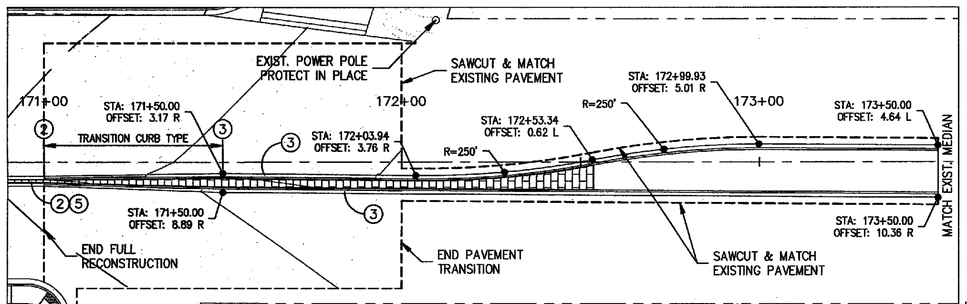

MEDIAN CURB LAYOUT DATA AT END OF PROJECT

NO.	DESCRIPTION	DATE	BY
3			
2			
1			

REVISIONS (OR CHANGE NOTICES)

JAMES H. BUCKMAN NEW MEXICO 13062 REGISTERED PROFESSIONAL ENGINEER

CITY OF SANTA FE

CERRILLOS ROAD PHASE IIC
CAMINO CARLOS REY TO
LLANO STREET
SANTA FE COUNTY

CERRILLOS ROAD LAYOUT PLAN

SCALE HORIZ. 1"=20'

DESIGNED BY: PB	DRAWN BY: PB	CHECKED BY: JB
DATE: 08/07/15	DATE: 08/07/15	DATE: 08/07/15

J:\33693 Cerrillos Ph IIC\04 Engineering–33693\Plans\3_Sheets\3–13 Rdwy Plan_07.dwg Oct 06, 2015 – 1:56pm Saved By: JimenezR

N.M. PROJECT NO. CN S100130 SHEET NO. 3–13

CITY OF SANTA FE	SHEET
NEW MEXICO PROJECT NO.	NO.
CN S100130	3-14

PARSONS BRINCKERHOFF

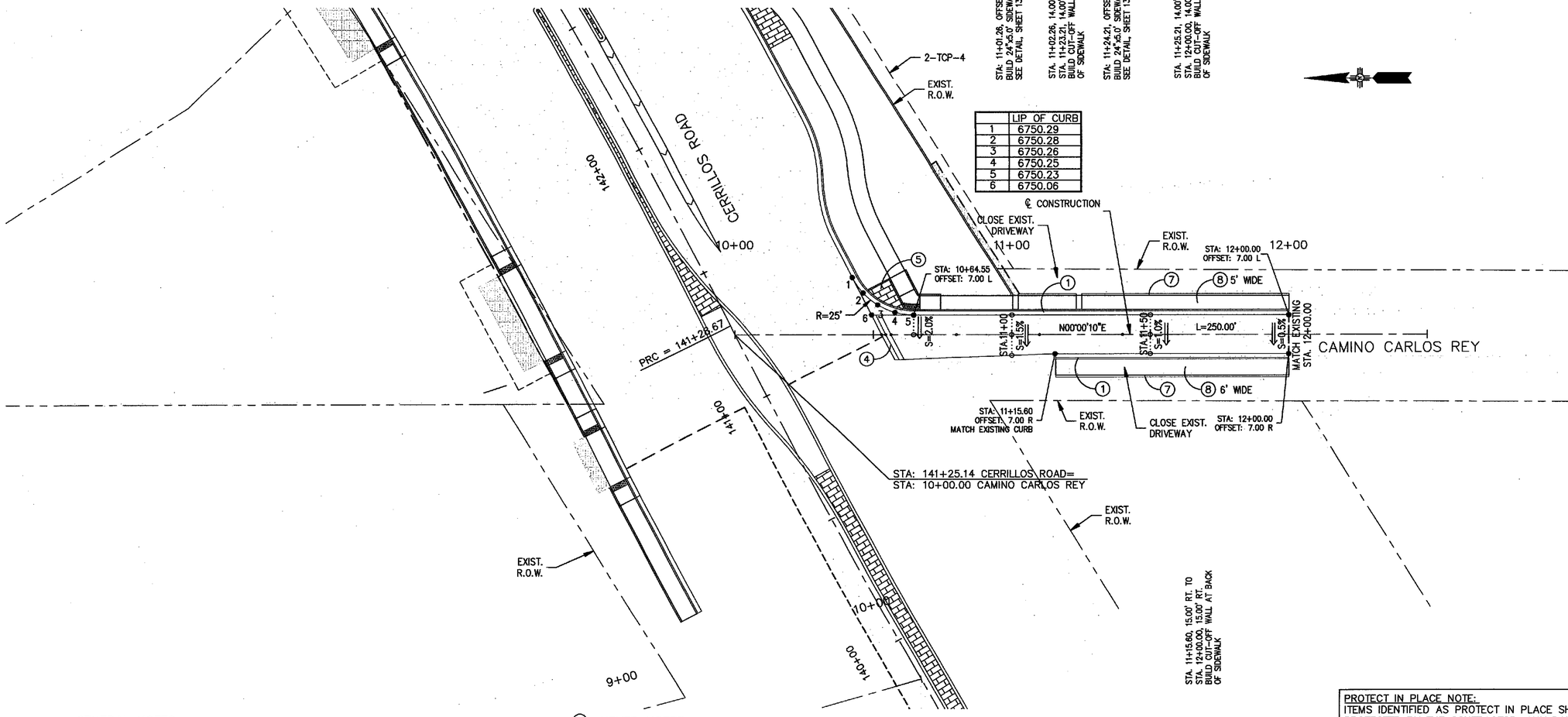

	LIP OF CURB
1	6750.29
2	6750.28
3	6750.26
4	6750.25
5	6750.23
6	6750.06

GENERAL NOTES

1. STATIONS AND OFFSETS PROVIDED REFER TO SIDE STREET CENTERLINE AND LIP OF CURB/GUTTER UNLESS OTHERWISE NOTED.
2. CURVE DATA PROVIDED REFERS TO LIP OF CURB/GUTTER UNLESS OTHERWISE NOTED.
3. CURB ELEVATIONS PROVIDED REFER TO LIP OF CURB/GUTTER UNLESS OTHERWISE NOTED.
4. SEE ROADWAY PLAN & PROFILE SHEETS 3-1 TO 3-3 FOR ADDITIONAL INFORMATION.
5. SEE CERRILLOS ROAD LAYOUT PLANS 3-7 TO 3-13 FOR ADDITIONAL INFORMATION.
6. DRIVEPAD STATIONS AND OFFSETS PROVIDED REFER TO SIDESTREET CENTERLINE AND BACK OF CURB. SEE DRIVEPAD DETAILS SHEET 2-14 FOR ADDITIONAL INFORMATION.
7. SEE TURNOUT SECTIONS 4-1 TO 4-4 FOR LENGTH OF DRIVEPAD AND ASPHALT.
8. SEE CERRILLOS ROAD PHASE IIC FINAL RIGHT-OF-WAY MAPS (S100130) DATED APRIL 4, 2014 FOR ADDITIONAL RIGHT-OF-WAY AND TCP INFORMATION.
9. BACK OF HEADER CURB & CUT-OFF WALL DEFINE SLOPE LIMITS, UNLESS OTHERWISE NOTED.

○ KEYED NOTES

1. BUILD CONCRETE BARRIER CURB & GUTTER TYPE B 6"X24", SEE SHEET 13-1 FOR DETAILS.
2. BUILD MODIFIED CONCRETE BARRIER CURB & GUTTER TYPE D 6"X12", SEE SHEET 2-14 FOR DETAILS.
3. BUILD CONCRETE BARRIER CURB & GUTTER TYPE B 6"X18", SEE SHEET 13-1 FOR DETAILS.
4. BUILD CONCRETE VALLEY GUTTER, SEE SHEET 2-14 AND 13-1 FOR DETAILS.
5. BUILD MEDIAN CONCRETE PAVEMENT, SEE SHEET 12-7 FOR DETAILS.
6. BUILD HEADER CURB, SEE SHEET 2-14 FOR DETAILS.
7. BUILD CUT-OFF WALL, SEE SHEET 2-14 FOR DETAILS.
8. BUILD CONCRETE SIDEWALK, SEE SHEET 13-1 FOR DETAILS. MATCH EXISTING SIDEWALK WIDTH.

PROTECT IN PLACE NOTE:
ITEMS IDENTIFIED AS PROTECT IN PLACE SHALL BE PROTECTED BY THE CONTRACTOR. ANY DAMAGES TO THESE ITEMS WILL BE THE RESPONSIBILITY OF THE CONTRACTOR TO REPAIR OR REPLACE SUCH ITEMS AS DIRECTED BY THE CITY PROJECT MANAGER AT NO ADDITIONAL COST TO THE CITY.

NO.	DESCRIPTION	DATE	BY
3			
2			
1			

REVISIONS (OR CHANGE NOTICES)

JAMES H. BUCKMAN NEW MEXICO 13062 REGISTERED PROFESSIONAL ENGINEER 10/14/15

CITY OF SANTA FE

CERRILLOS ROAD PHASE IIC
CAMINO CARLOS REY TO LLANO STREET
SANTA FE COUNTY
SIDESTREET LAYOUT PLAN
CAMINO CARLOS REY

SCALE HORIZ. 1"=20'

DESIGNED BY: PB	DRAWN BY: PB	CHECKED BY: JB
DATE: 08/07/15	DATE: 08/07/15	DATE: 08/07/15

PARSONS BRINCKERHOFF

CITY OF SANTA FE	SHEET
NEW MEXICO PROJECT NO.	NO.
CN S100130	3–15

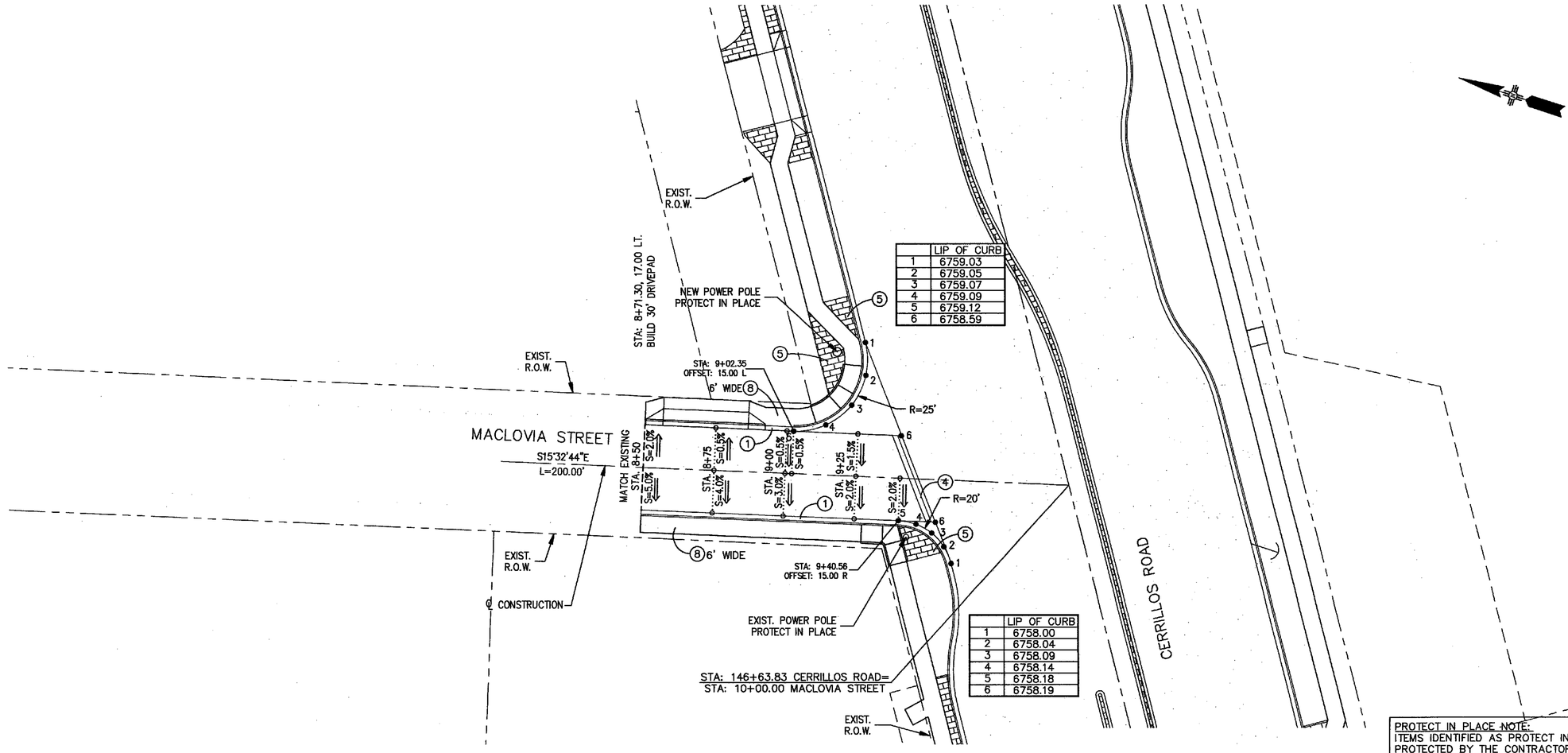

	LIP OF CURB
1	6759.03
2	6759.05
3	6759.07
4	6759.09
5	6759.12
6	6758.59

	LIP OF CURB
1	6758.00
2	6758.04
3	6758.09
4	6758.14
5	6758.18
6	6758.19

PROTECT IN PLACE NOTE:
ITEMS IDENTIFIED AS PROTECT IN PLACE SHALL BE PROTECTED BY THE CONTRACTOR. ANY DAMAGES TO THESE ITEMS WILL BE THE RESPONSIBILITY OF THE CONTRACTOR TO REPAIR OR REPLACE SUCH ITEMS AS DIRECTED BY THE CITY PROJECT MANAGER AT NO ADDITIONAL COST TO THE CITY.

GENERAL NOTES

1. STATIONS AND OFFSETS PROVIDED REFER TO SIDE STREET CENTERLINE AND LIP OF CURB/GUTTER UNLESS OTHERWISE NOTED.
2. CURVE DATA PROVIDED REFERS TO LIP OF CURB/GUTTER UNLESS OTHERWISE NOTED.
3. CURB ELEVATIONS PROVIDED REFER TO LIP OF CURB/GUTTER UNLESS OTHERWISE NOTED.
4. SEE ROADWAY PLAN & PROFILE SHEETS 3–1 TO 3–3 FOR ADDITIONAL INFORMATION.
5. SEE CERRILLOS ROAD LAYOUT PLANS 3–7 TO 3–13 FOR ADDITIONAL INFORMATION.
6. DRIVEPAD STATIONS AND OFFSETS PROVIDED REFER TO SIDESTREET CENTERLINE AND BACK OF CURB. SEE DRIVEPAD DETAILS SHEET 2–14 FOR ADDITIONAL INFORMATION.
7. SEE TURNOUT SECTIONS 4–1 TO 4–4 FOR LENGTH OF DRIVEPAD AND ASPHALT.
8. SEE CERRILLOS ROAD PHASE IIC FINAL RIGHT–OF–WAY MAPS (S100130) DATED APRIL 4, 2014 FOR ADDITIONAL RIGHT–OF–WAY AND TCP INFORMATION.
9. BACK OF HEADER CURB & CUT–OFF WALL DEFINE SLOPE LIMITS, UNLESS OTHERWISE NOTED.

○ KEYED NOTES

1. BUILD CONCRETE BARRIER CURB & GUTTER TYPE B 6"X24", SEE SHEET 13–1 FOR DETAILS.
2. BUILD MODIFIED CONCRETE BARRIER CURB & GUTTER TYPE D 6"X12", SEE SHEET 2–14 FOR DETAILS.
3. BUILD CONCRETE BARRIER CURB & GUTTER TYPE B 6"X18", SEE SHEET 13–1 FOR DETAILS.
4. BUILD CONCRETE VALLEY GUTTER, SEE SHEET 2–14 AND 13–1 FOR DETAILS.
5. BUILD MEDIAN CONCRETE PAVEMENT, SEE SHEET 12–7 FOR DETAILS.
6. BUILD HEADER CURB, SEE SHEET 2–14 FOR DETAILS.
7. BUILD CUT–OFF WALL, SEE SHEET 2–14 FOR DETAILS.
8. BUILD CONCRETE SIDEWALK, SEE SHEET 13–1 FOR DETAILS. MATCH EXISTING SIDEWALK WIDTH.

NO.	DESCRIPTION	DATE	BY
3			
2			
1			

REVISIONS (OR CHANGE NOTICES)

JAMES H. BUCKMAN NEW MEXICO 13062 REGISTERED PROFESSIONAL ENGINEER 10/8/15

CITY OF SANTA FE

CERRILLOS ROAD PHASE IIC
CAMINO CARLOS REY TO
LLANO STREET
SANTA FE COUNTY
SIDESTREET LAYOUT PLAN
MACLOVIA STREET

SCALE
HORIZ. 1"=20'

DESIGNED BY: PB	DRAWN BY: PB	CHECKED BY: JB
DATE: 08/07/15	DATE: 08/07/15	DATE: 08/07/15

PARSONS BRINCKERHOFF

CITY OF SANTA FE	SHEET
NEW MEXICO PROJECT NO.	NO.
CN S100130	3–16

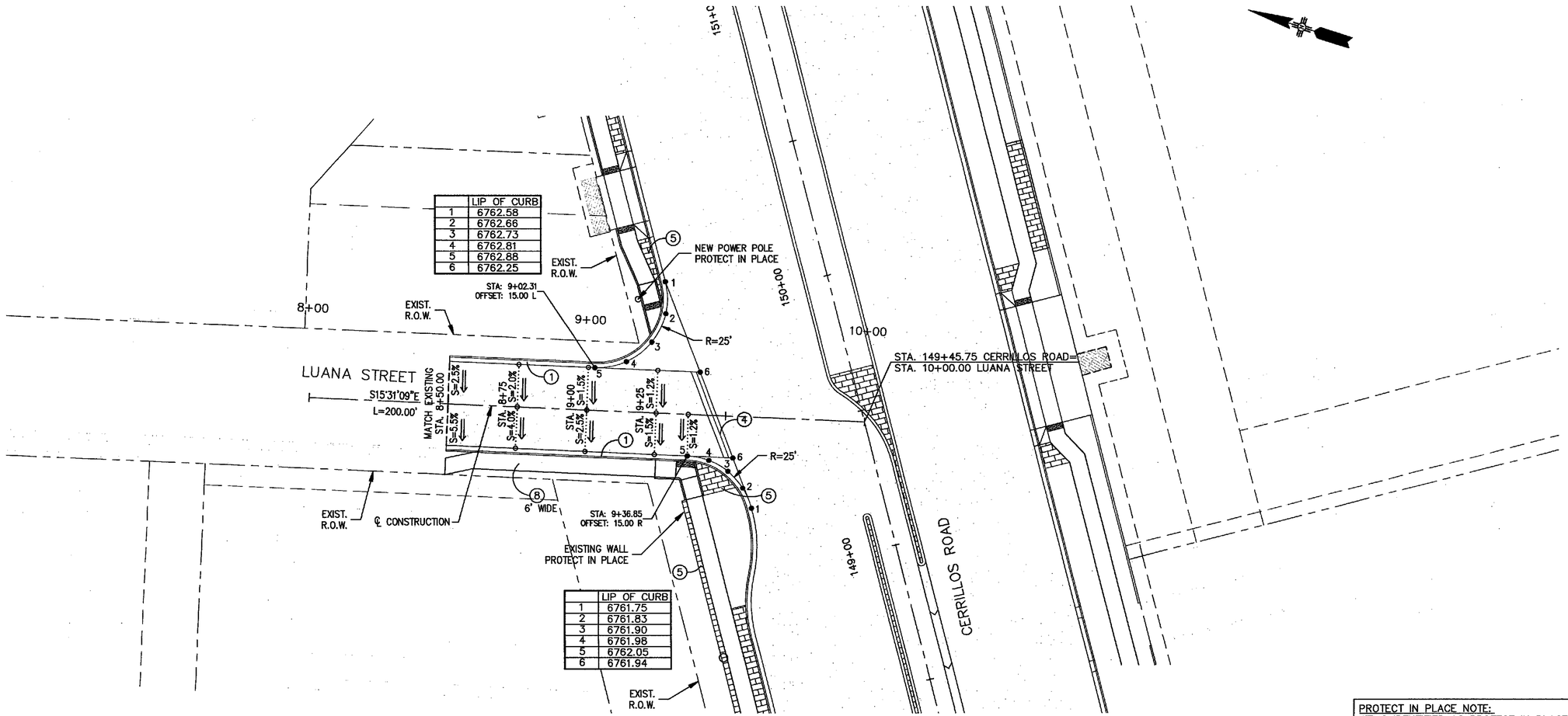

	LIP OF CURB
1	6762.58
2	6762.66
3	6762.73
4	6762.81
5	6762.88
6	6762.25

	LIP OF CURB
1	6761.75
2	6761.83
3	6761.90
4	6761.98
5	6762.05
6	6761.94

GENERAL NOTES

1. STATIONS AND OFFSETS PROVIDED REFER TO SIDE STREET CENTERLINE AND LIP OF CURB/GUTTER UNLESS OTHERWISE NOTED.
2. CURVE DATA PROVIDED REFERS TO LIP OF CURB/GUTTER UNLESS OTHERWISE NOTED.
3. CURB ELEVATIONS PROVIDED REFER TO LIP OF CURB/GUTTER UNLESS OTHERWISE NOTED.
4. SEE ROADWAY PLAN & PROFILE SHEETS 3–1 TO 3–3 FOR ADDITIONAL INFORMATION.
5. SEE CERRILLOS ROAD LAYOUT PLANS 3–7 TO 3–13 FOR ADDITIONAL INFORMATION.
6. DRIVEPAD STATIONS AND OFFSETS PROVIDED REFER TO SIDESTREET CENTERLINE AND BACK OF CURB. SEE DRIVEPAD DETAILS SHEET 2–14 FOR ADDITIONAL INFORMATION.
7. SEE TURNOUT SECTIONS 4–1 TO 4–4 FOR LENGTH OF DRIVEPAD AND ASPHALT.
8. SEE CERRILLOS ROAD PHASE IIC FINAL RIGHT–OF–WAY MAPS (S100130) DATED APRIL 4, 2014 FOR ADDITIONAL RIGHT–OF–WAY AND TCP INFORMATION.
9. BACK OF HEADER CURB & CUT–OFF WALL DEFINE SLOPE LIMITS, UNLESS OTHERWISE NOTED.

○ KEYED NOTES

1. BUILD CONCRETE BARRIER CURB & GUTTER TYPE B 6"X24", SEE SHEET 13–1 FOR DETAILS.
2. BUILD MODIFIED CONCRETE BARRIER CURB & GUTTER TYPE D 6"X12", SEE SHEET 2–14 FOR DETAILS.
3. BUILD CONCRETE BARRIER CURB & GUTTER TYPE B 6"X18", SEE SHEET 13–1 FOR DETAILS.
4. BUILD CONCRETE VALLEY GUTTER, SEE SHEET 2–14 AND 13–1 FOR DETAILS.
5. BUILD MEDIAN CONCRETE PAVEMENT, SEE SHEET 12–7 FOR DETAILS.
6. BUILD HEADER CURB, SEE SHEET 2–14 FOR DETAILS.
7. BUILD CUT–OFF WALL, SEE SHEET 2–14 FOR DETAILS.
8. BUILD CONCRETE SIDEWALK, SEE SHEET 13–1 FOR DETAILS. MATCH EXISTING SIDEWALK WIDTH.

PROTECT IN PLACE NOTE:
ITEMS IDENTIFIED AS PROTECT IN PLACE SHALL BE PROTECTED BY THE CONTRACTOR. ANY DAMAGES TO THESE ITEMS WILL BE THE RESPONSIBILITY OF THE CONTRACTOR TO REPAIR OR REPLACE SUCH ITEMS AS DIRECTED BY THE CITY PROJECT MANAGER AT NO ADDITIONAL COST TO THE CITY.

NO.	DESCRIPTION	DATE	BY
3			
2			
1			

REVISIONS (OR CHANGE NOTICES)

JAMES H. BUCKMAN NEW MEXICO 13062 8/7/15 REGISTERED PROFESSIONAL ENGINEER

CITY OF SANTA FE

CERRILLOS ROAD PHASE IIC
CAMINO CARLOS REY TO
LLANO STREET
SANTA FE COUNTY
SIDESTREET LAYOUT PLAN
LUANA STREET

SCALE
HORIZ. 1"=20'

DESIGNED BY: PB	DRAWN BY: PB	CHECKED BY: JB
DATE: 08/07/15	DATE: 08/07/15	DATE: 08/07/15

J:\33693 Cerrillos Ph IIC\04 Engineering–33693\Plans\3_Sheets\3–16 Luana–INT.dwg Oct 06, 2015 – 2:12pm Saved By: JimenezR

N.M. PROJECT NO. CN S100130 SHEET NO. 3–16

PARSONS BRINCKERHOFF

CITY OF SANTA FE	SHEET
NEW MEXICO PROJECT NO.	NO.
CN S100130	3–17

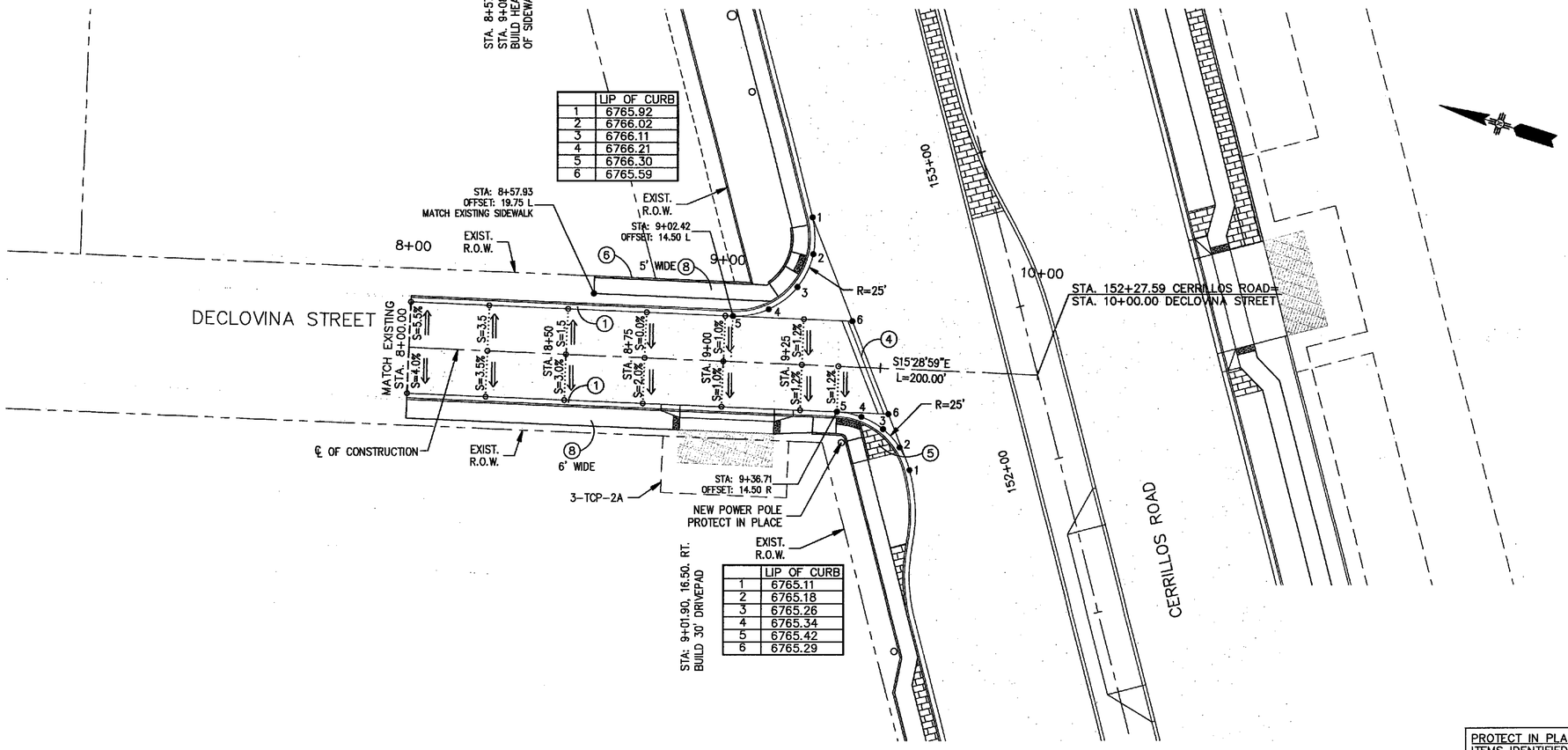

GENERAL NOTES

1. STATIONS AND OFFSETS PROVIDED REFER TO SIDE STREET CENTERLINE AND LIP OF CURB/GUTTER UNLESS OTHERWISE NOTED.
2. CURVE DATA PROVIDED REFERS TO LIP OF CURB/GUTTER UNLESS OTHERWISE NOTED.
3. CURB ELEVATIONS PROVIDED REFER TO LIP OF CURB/GUTTER UNLESS OTHERWISE NOTED.
4. SEE ROADWAY PLAN & PROFILE SHEETS 3–1 TO 3–3 FOR ADDITIONAL INFORMATION.
5. SEE CERRILLOS ROAD LAYOUT PLANS 3–7 TO 3–13 FOR ADDITIONAL INFORMATION.
6. DRIVEPAD STATIONS AND OFFSETS PROVIDED REFER TO SIDESTREET CENTERLINE AND BACK OF CURB. SEE DRIVEPAD DETAILS SHEET 2–14 FOR ADDITIONAL INFORMATION.
7. SEE TURNOUT SECTIONS 4–1 TO 4–4 FOR LENGTH OF DRIVEPAD AND ASPHALT.
8. SEE CERRILLOS ROAD PHASE IIC FINAL RIGHT–OF–WAY MAPS (S100130) DATED APRIL 4, 2014 FOR ADDITIONAL RIGHT–OF–WAY AND TCP INFORMATION.
9. BACK OF HEADER CURB & CUT–OFF WALL DEFINE SLOPE LIMITS, UNLESS OTHERWISE NOTED.

○ KEYED NOTES

1. BUILD CONCRETE BARRIER CURB & GUTTER TYPE B 6"X24", SEE SHEET 13–1 FOR DETAILS.
2. BUILD MODIFIED CONCRETE BARRIER CURB & GUTTER TYPE D 6"X12", SEE SHEET 2–14 FOR DETAILS.
3. BUILD CONCRETE BARRIER CURB & GUTTER TYPE B 6"X18", SEE SHEET 13–1 FOR DETAILS.
4. BUILD CONCRETE VALLEY GUTTER, SEE SHEET 2–14 AND 13–1 FOR DETAILS.
5. BUILD MEDIAN CONCRETE PAVEMENT, SEE SHEET 12–7 FOR DETAILS.
6. BUILD HEADER CURB, SEE SHEET 2–14 FOR DETAILS.
7. BUILD CUT–OFF WALL, SEE SHEET 2–14 FOR DETAILS.
8. BUILD CONCRETE SIDEWALK, SEE SHEET 13–1 FOR DETAILS. MATCH EXISTING SIDEWALK WIDTH.

PROTECT IN PLACE NOTE:
ITEMS IDENTIFIED AS PROTECT IN PLACE SHALL BE PROTECTED BY THE CONTRACTOR. ANY DAMAGES TO THESE ITEMS WILL BE THE RESPONSIBILITY OF THE CONTRACTOR TO REPAIR OR REPLACE SUCH ITEMS AS DIRECTED BY THE CITY PROJECT MANAGER AT NO ADDITIONAL COST TO THE CITY.

NO.	DESCRIPTION	DATE	BY
3			
2			
1			

REVISIONS (OR CHANGE NOTICES)

JAMES H. BUCKMAN NEW MEXICO 13062 REGISTERED PROFESSIONAL ENGINEER 10/7/15

CITY OF SANTA FE

CERRILLOS ROAD PHASE IIC
CAMINO CARLOS REY TO
LLANO STREET
SANTA FE COUNTY
SIDESTREET LAYOUT PLAN
DECLOVINA STREET

SCALE
HORIZ. 1"=20'

DESIGNED BY: PB	DRAWN BY: PB	CHECKED BY: JB
DATE: 08/07/15	DATE: 08/07/15	DATE: 08/07/15

CITY OF SANTA FE	SHEET
NEW MEXICO PROJECT NO.	NO.
CN S100130	3–18

PARSONS BRINCKERHOFF

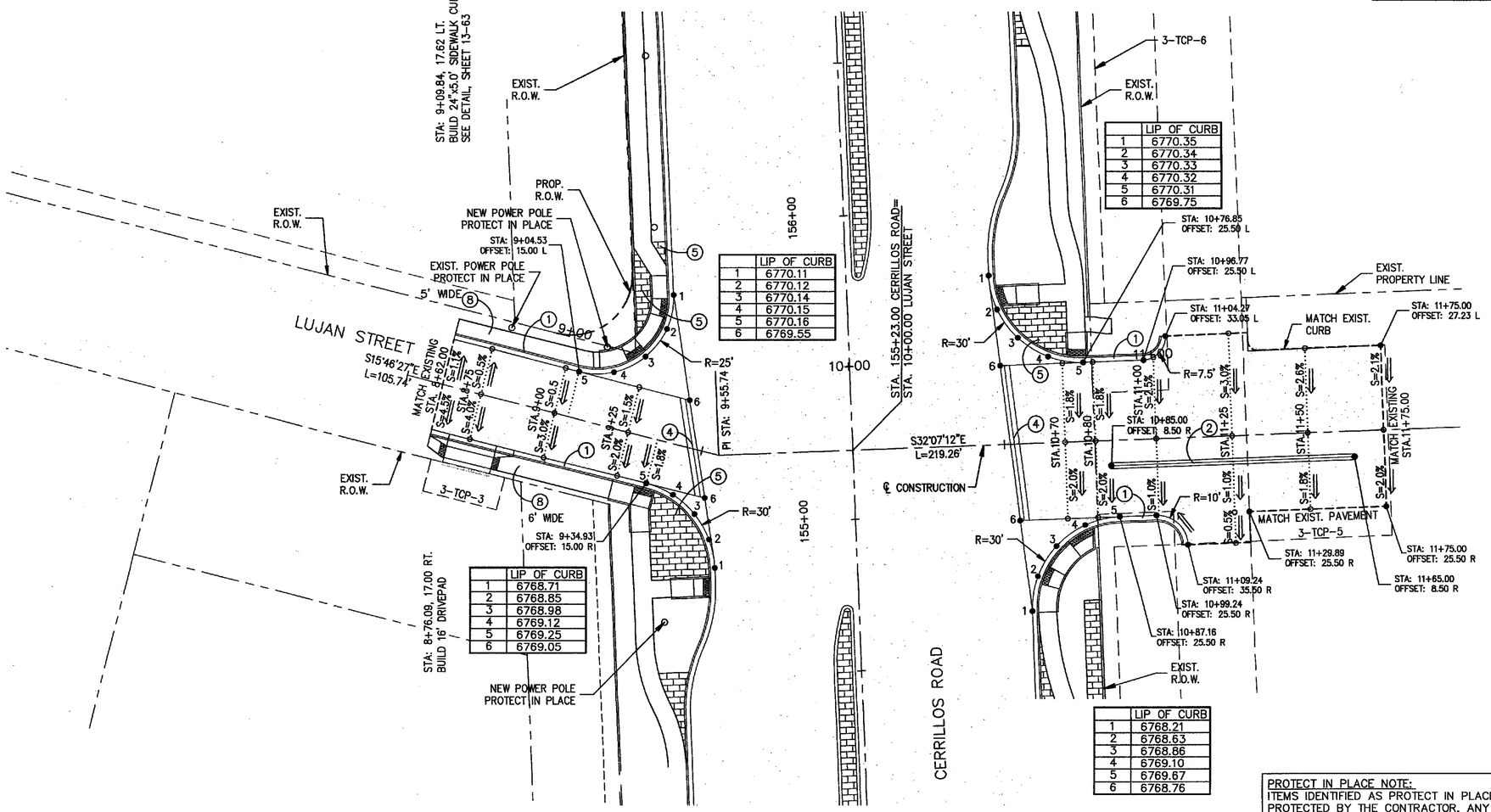

	LIP OF CURB
1	6770.11
2	6770.12
3	6770.14
4	6770.15
5	6770.16
6	6769.55

	LIP OF CURB
1	6768.71
2	6768.85
3	6768.98
4	6769.12
5	6769.25
6	6769.05

	LIP OF CURB
1	6770.35
2	6770.34
3	6770.33
4	6770.32
5	6770.31
6	6769.75

	LIP OF CURB
1	6768.21
2	6768.63
3	6768.86
4	6769.10
5	6769.67
6	6768.76

GENERAL NOTES

1. STATIONS AND OFFSETS PROVIDED REFER TO SIDE STREET CENTERLINE AND LIP OF CURB/GUTTER UNLESS OTHERWISE NOTED.
2. CURVE DATA PROVIDED REFERS TO LIP OF CURB/GUTTER UNLESS OTHERWISE NOTED.
3. CURB ELEVATIONS PROVIDED REFER TO LIP OF CURB/GUTTER UNLESS OTHERWISE NOTED.
4. SEE ROADWAY PLAN & PROFILE SHEETS 3–1 TO 3–3 FOR ADDITIONAL INFORMATION.
5. SEE CERRILLOS ROAD LAYOUT PLANS 3–7 TO 3–13 FOR ADDITIONAL INFORMATION.
6. DRIVEPAD STATIONS AND OFFSETS PROVIDED REFER TO SIDESTREET CENTERLINE AND BACK OF CURB. SEE DRIVEPAD DETAILS SHEET 2–14 FOR ADDITIONAL INFORMATION.
7. SEE TURNOUT SECTIONS 4–1 TO 4–4 FOR LENGTH OF DRIVEPAD AND ASPHALT.
8. SEE CERRILLOS ROAD PHASE IIC FINAL RIGHT–OF–WAY MAPS (S100130) DATED APRIL 4, 2014 FOR ADDITIONAL RIGHT–OF–WAY AND TCP INFORMATION.
9. BACK OF HEADER CURB & CUT–OFF WALL DEFINE SLOPE LIMITS, UNLESS OTHERWISE NOTED.

○ KEYED NOTES

1. BUILD CONCRETE BARRIER CURB & GUTTER TYPE B 6"X24", SEE SHEET 13–1 FOR DETAILS.
2. BUILD MODIFIED CONCRETE BARRIER CURB & GUTTER TYPE D 6"X12", SEE SHEET 2–14 FOR DETAILS.
3. BUILD CONCRETE BARRIER CURB & GUTTER TYPE B 6"X18", SEE SHEET 13–1 FOR DETAILS.
4. BUILD CONCRETE VALLEY GUTTER, SEE SHEET 2–14 AND 13–1 FOR DETAILS.
5. BUILD MEDIAN CONCRETE PAVEMENT, SEE SHEET 12–7 FOR DETAILS.
6. BUILD HEADER CURB, SEE SHEET 2–14 FOR DETAILS.
7. BUILD CUT–OFF WALL, SEE SHEET 2–14 FOR DETAILS.
8. BUILD CONCRETE SIDEWALK, SEE SHEET 13–1 FOR DETAILS. MATCH EXISTING SIDEWALK WIDTH.

PROTECT IN PLACE NOTE:
ITEMS IDENTIFIED AS PROTECT IN PLACE SHALL BE PROTECTED BY THE CONTRACTOR. ANY DAMAGES TO THESE ITEMS WILL BE THE RESPONSIBILITY OF THE CONTRACTOR TO REPAIR OR REPLACE SUCH ITEMS AS DIRECTED BY THE CITY PROJECT MANAGER AT NO ADDITIONAL COST TO THE CITY.

NO.	DESCRIPTION	DATE	BY
3			
2			
1			

REVISIONS (OR CHANGE NOTICES)

JAMES H. BUCKMAN NEW MEXICO 13062 REGISTERED PROFESSIONAL ENGINEER 10/7/15

CITY OF SANTA FE

CERRILLOS ROAD PHASE IIC
CAMINO CARLOS REY TO
LLANO STREET
SANTA FE COUNTY
SIDESTREET LAYOUT PLAN
LUJAN STREET

SCALE
HORIZ. 1"=20'

DESIGNED BY: PB	DRAWN BY: PB	CHECKED BY: JB
DATE: 08/07/15	DATE: 08/07/15	DATE: 08/07/15

J:\33693 Cerrillos Ph IIC\04 Engineering–33693\Plans\3_Sheets\3–18 LUJAN–INT.dwg Oct 06, 2015 – 2:20pm Saved By: JimenezR

N.M. PROJECT NO. CN S100130 SHEET NO. 3–18

PARSONS BRINCKERHOFF

CITY OF SANTA FE	SHEET
NEW MEXICO PROJECT NO.	NO.
CN S100130	3–19

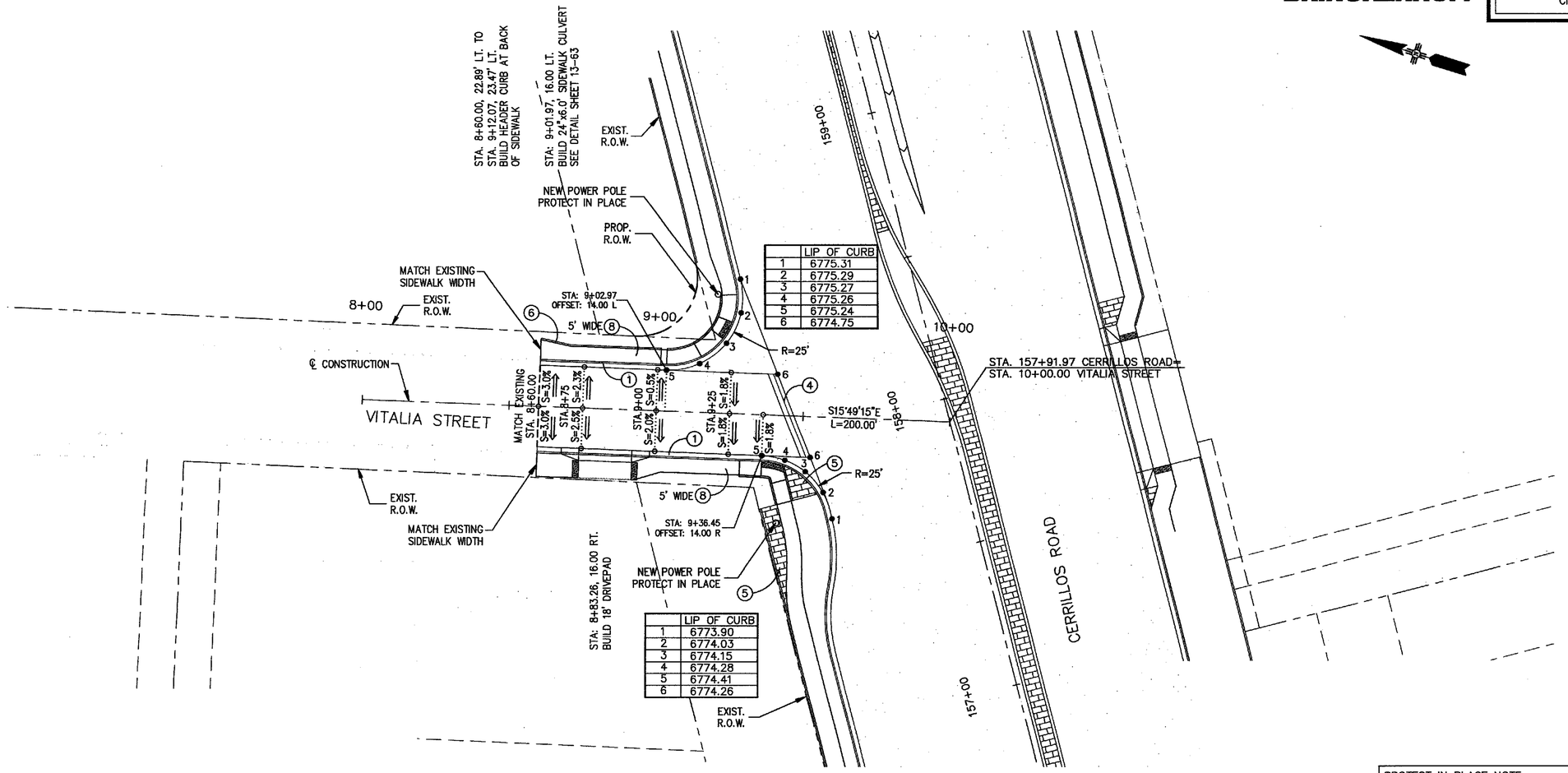

	LIP OF CURB
1	6775.31
2	6775.29
3	6775.27
4	6775.26
5	6775.24
6	6774.75

	LIP OF CURB
1	6773.90
2	6774.03
3	6774.15
4	6774.28
5	6774.41
6	6774.26

GENERAL NOTES

1. STATIONS AND OFFSETS PROVIDED REFER TO SIDE STREET CENTERLINE AND LIP OF CURB/GUTTER UNLESS OTHERWISE NOTED.
2. CURVE DATA PROVIDED REFERS TO LIP OF CURB/GUTTER UNLESS OTHERWISE NOTED.
3. CURB ELEVATIONS PROVIDED REFER TO LIP OF CURB/GUTTER UNLESS OTHERWISE NOTED.
4. SEE ROADWAY PLAN & PROFILE SHEETS 3–1 TO 3–3 FOR ADDITIONAL INFORMATION.
5. SEE CERRILLOS ROAD LAYOUT PLANS 3–7 TO 3–13 FOR ADDITIONAL INFORMATION.
6. DRIVEPAD STATIONS AND OFFSETS PROVIDED REFER TO SIDESTREET CENTERLINE AND BACK OF CURB. SEE DRIVEPAD DETAILS SHEET 2–14 FOR ADDITIONAL INFORMATION.
7. SEE TURNOUT SECTIONS 4–1 TO 4–4 FOR LENGTH OF DRIVEPAD AND ASPHALT.
8. SEE CERRILLOS ROAD PHASE IIC FINAL RIGHT–OF–WAY MAPS (S100130) DATED APRIL 4, 2014 FOR ADDITIONAL RIGHT–OF–WAY AND TCP INFORMATION.
9. BACK OF HEADER CURB & CUT–OFF WALL DEFINE SLOPE LIMITS, UNLESS OTHERWISE NOTED.

○ KEYED NOTES

1. BUILD CONCRETE BARRIER CURB & GUTTER TYPE B 6"X24", SEE SHEET 13–1 FOR DETAILS.
2. BUILD MODIFIED CONCRETE BARRIER CURB & GUTTER TYPE D 6"X12", SEE SHEET 2–14 FOR DETAILS.
3. BUILD CONCRETE BARRIER CURB & GUTTER TYPE B 6"X18", SEE SHEET 13–1 FOR DETAILS.
4. BUILD CONCRETE VALLEY GUTTER, SEE SHEET 2–14 AND 13–1 FOR DETAILS.
5. BUILD MEDIAN CONCRETE PAVEMENT, SEE SHEET 12–7 FOR DETAILS.
6. BUILD HEADER CURB, SEE SHEET 2–14 FOR DETAILS.
7. BUILD CUT–OFF WALL, SEE SHEET 2–14 FOR DETAILS.
8. BUILD CONCRETE SIDEWALK, SEE SHEET 13–1 FOR DETAILS. MATCH EXISTING SIDEWALK WIDTH.

PROTECT IN PLACE NOTE:
ITEMS IDENTIFIED AS PROTECT IN PLACE SHALL BE PROTECTED BY THE CONTRACTOR. ANY DAMAGES TO THESE ITEMS WILL BE THE RESPONSIBILITY OF THE CONTRACTOR TO REPAIR OR REPLACE SUCH ITEMS AS DIRECTED BY THE CITY PROJECT MANAGER AT NO ADDITIONAL COST TO THE CITY.

NO.	DESCRIPTION	DATE	BY
3			
2			
1			

REVISIONS (OR CHANGE NOTICES)

JAMES H. BUCKMAN NEW MEXICO 13062 REGISTERED PROFESSIONAL ENGINEER 10/7/15

CITY OF SANTA FE

CERRILLOS ROAD PHASE IIC
CAMINO CARLOS REY TO
LLANO STREET
SANTA FE COUNTY
SIDESTREET LAYOUT PLAN
VITALIA STREET

SCALE
HORIZ. 1"=20'

DESIGNED BY: PB	DRAWN BY: PB	CHECKED BY: JB
DATE: 08/07/15	DATE: 08/07/15	DATE: 08/07/15

J:\33693 Cerrillos Ph IIC\04 Engineering–33693\Plans\3_Sheets\3–19 Vitalia st–INT.dwg Oct 06, 2015 – 2:24pm Saved By: JimenezR

N.M. PROJECT NO. CN S100130 SHEET NO. 3–19

PARSONS BRINCKERHOFF

CITY OF SANTA FE	SHEET
NEW MEXICO PROJECT NO.	NO.
CN S100130	3–20

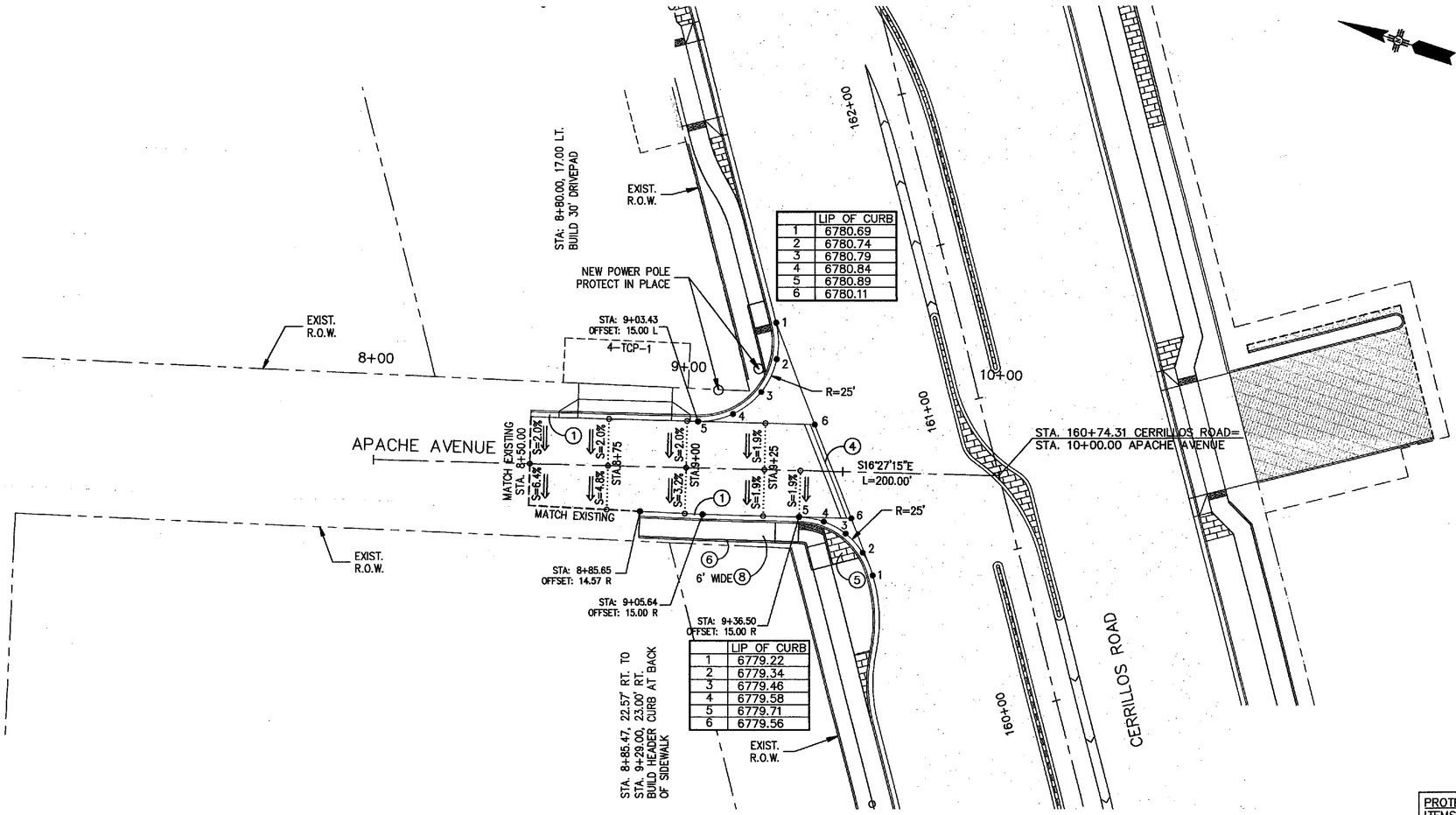

	LIP OF CURB
1	6780.69
2	6780.74
3	6780.79
4	6780.84
5	6780.89
6	6780.11

	LIP OF CURB
1	6779.22
2	6779.34
3	6779.46
4	6779.58
5	6779.71
6	6779.56

GENERAL NOTES

1. STATIONS AND OFFSETS PROVIDED REFER TO SIDE STREET CENTERLINE AND LIP OF CURB/GUTTER UNLESS OTHERWISE NOTED.
2. CURVE DATA PROVIDED REFERS TO LIP OF CURB/GUTTER UNLESS OTHERWISE NOTED.
3. CURB ELEVATIONS PROVIDED REFER TO LIP OF CURB/GUTTER UNLESS OTHERWISE NOTED.
4. SEE ROADWAY PLAN & PROFILE SHEETS 3–1 TO 3–3 FOR ADDITIONAL INFORMATION.
5. SEE CERRILLOS ROAD LAYOUT PLANS 3–7 TO 3–13 FOR ADDITIONAL INFORMATION.
6. DRIVEPAD STATIONS AND OFFSETS PROVIDED REFER TO SIDESTREET CENTERLINE AND BACK OF CURB. SEE DRIVEPAD DETAILS SHEET 2–14 FOR ADDITIONAL INFORMATION.
7. SEE TURNOUT SECTIONS 4–1 TO 4–4 FOR LENGTH OF DRIVEPAD AND ASPHALT.
8. SEE CERRILLOS ROAD PHASE IIC FINAL RIGHT–OF–WAY MAPS (S100130) DATED APRIL 4, 2014 FOR ADDITIONAL RIGHT–OF–WAY AND TCP INFORMATION.
9. BACK OF HEADER CURB & CUT–OFF WALL DEFINE SLOPE LIMITS, UNLESS OTHERWISE NOTED.

○ KEYED NOTES

1. BUILD CONCRETE BARRIER CURB & GUTTER TYPE B 6"X24", SEE SHEET 13–1 FOR DETAILS.
2. BUILD MODIFIED CONCRETE BARRIER CURB & GUTTER TYPE D 6"X12", SEE SHEET 2–14 FOR DETAILS.
3. BUILD CONCRETE BARRIER CURB & GUTTER TYPE B 6"X18", SEE SHEET 13–1 FOR DETAILS.
4. BUILD CONCRETE VALLEY GUTTER, SEE SHEET 2–14 AND 13–1 FOR DETAILS.
5. BUILD MEDIAN CONCRETE PAVEMENT, SEE SHEET 12–7 FOR DETAILS.
6. BUILD HEADER CURB, SEE SHEET 2–14 FOR DETAILS.
7. BUILD CUT–OFF WALL, SEE SHEET 2–14 FOR DETAILS.
8. BUILD CONCRETE SIDEWALK, SEE SHEET 13–1 FOR DETAILS. MATCH EXISTING SIDEWALK WIDTH.

PROTECT IN PLACE NOTE:
ITEMS IDENTIFIED AS PROTECT IN PLACE SHALL BE PROTECTED BY THE CONTRACTOR. ANY DAMAGES TO THESE ITEMS WILL BE THE RESPONSIBILITY OF THE CONTRACTOR TO REPAIR OR REPLACE SUCH ITEMS AS DIRECTED BY THE CITY PROJECT MANAGER AT NO ADDITIONAL COST TO THE CITY.

NO.	DESCRIPTION	DATE	BY
3			
2			
1			

REVISIONS (OR CHANGE NOTICES)

JAMES H. BUCKMAN NEW MEXICO 13062 REGISTERED PROFESSIONAL ENGINEER 10/9/15

CITY OF SANTA FE

CERRILLOS ROAD PHASE IIC
CAMINO CARLOS REY TO
LLANO STREET
SANTA FE COUNTY
SIDESTREET LAYOUT PLAN
APACHE AVENUE

SCALE
HORIZ. 1"=20'

DESIGNED BY: PB	DRAWN BY: PB	CHECKED BY: JB
DATE: 08/07/15	DATE: 08/07/15	DATE: 08/07/15

J:\33693 Cerrillos Ph IIC\04 Engineering–33693\Plans\3_Sheets\3–20 Apache ave–INT.dwg Oct 06, 2015 – 2:25pm Saved By: JimenezR

N.M. PROJECT NO. CN S100130 SHEET NO. 3–20

CITY OF SANTA FE	SHEET
NEW MEXICO PROJECT NO.	NO.
CN S100130	3–21

PARSONS BRINCKERHO

	LIP OF CURB
1	6796.02
2	6795.92
3	6795.82
4	6795.71
5	6795.61
6	6795.39

	LIP OF CURB
1	6796.96
2	6797.11
3	6797.27
4	6797.42
5	6797.58
6	–

	LIP OF CURB
1	6797.20
2	6797.46
3	6797.71
4	6797.97
5	6798.22
6	–

	LIP OF CURB
1	6798.48
2	6798.90
3	6799.35
4	6799.55
5	6799.90
6	–

	LIP OF CURB
1	6799.55
2	6799.65
3	6799.74
4	6799.02
5	6798.31
6	–

STA. 168+05.81 CERRILLOS ROAD
STA. 10+00.00 ST. MICHAELS DRIVE

ST. MICHAEL'S DR.

CERRILLOS ROAD

CONSTRUCTION

SLOPE LIMITS

STA: 10+42.02 OFFSET: 82.47 L

STA: 10+83.38 PRC OFFSET: 69.97 L

STA: 10+60.72 OFFSET: 55.80 L

STA: 11+16.98 PC OFFSET: 57.00 L

STA: 11+86.95 PT OFFSET: 57.00 L

STA: 12+05.07 PRC OFFSET: 55.44 L

STA: 12+57.47 PT OFFSET: 71.04 L

STA: 12+21.13 PC OFFSET: 54.06 L

STA: 12+56.00 OFFSET: 88.98 L

MATCH EXIST.

STA: 12+85.44 OFFSET: 78.23 L

STA: 12+85.61 PC OFFSET: 76.15 L

STA: 12+98.89 OFFSET: 54.06 L

EXISTING DRAINAGE INLET, PROTECT IN PLACE

STA: 14+96.34 PT OFFSET: 72.23 L

STA: 14+89.47 PT OFFSET: 56.98 L

MATCH EXIST.

STA: 14+71.81 PC OFFSET: 46.18 L

STA: 14+83.31 PT OFFSET: 11.00 L

STA: 14+11.99 PRC OFFSET: 5.50 L

STA: 14+52.24 PC OFFSET: 11.00 L

STA: 14+50.70 PC OFFSET: 13.00 R

STA: 14+86.94 PCC OFFSET: 2.56 L

EXISTING MEDIAN PROTECT IN PLACE

MATCH EXISTING 15+68.00

STA: 10+59.23 PT OFFSET: 0.00 L

STA: 10+58.86 PC OFFSET: 5.98 R

STA: 10+94.10 PRC OFFSET: 44.25 R

STA: 11+85.00 PCC OFFSET: 51.23 R

STA: 12+32.55 PCC OFFSET: 44.00 L

STA: 12+76.79 PCC OFFSET: 22.81 R

OVERHEAD SIGN STRUCTURE, SEE SECTION 7 FOR LOCATION AND DETAILS

STA: 13+19.70 PRC OFFSET: 17.94 R

STA: 13+71.75 PT OFFSET: 0.00 L

STA: 13+57.88 PT OFFSET: 13.00 R

STA: 13+52.43 PT OFFSET: 57.00 RT.

STA: 14+76.47 PC OFFSET: 57.00 R

STA: 15+01.44 PT OFFSET: 80.67 R

STA: 11+35.00 PT OFFSET: 48.27 R

STA: 11+84.34 PT OFFSET: 62.21 R

STA: 12+43.13 PC OFFSET: 56.55 R

STA: 10+62.94 PCC OFFSET: 63.24 R

STA: 10+58.35 PC OFFSET: 98.83 RT.

MATCH EXISTING SIDEWALK WIDTH AND GRADE
STA: 11+47.88 OFFSET: 76.81 R

EXIST. SIDEWALK, PROTECT IN PLACE

STA: 12+41.69 OFFSET: 65.94 R

EXIST. SIDEWALK & STAIRS, PROTECT IN PLACE

EXIST. R.O.W.

ALONG R.O.W.

4–TCP–6A

MATCH EXIST.

STA. 10+45.28, 88.75' LT. TO STA. 12+37.54, 60.06' LT. BUILD HEADER CURB ALONG BACK OF SIDEWALK.

STA. 12+54.51, 57.06 LT. BUILD TYPE "IB" CURB RAMP

STA: 12+93.31 56.96 LT. BUILD TYPE "IB" CURB RAMP

STA. 13+11.28, 60.28' LT. TO STA. 14+77.25, 63.26' LT. BUILD HEADER CURB ALONG BACK OF SIDEWALK.

STA: 14+94.01, 60.56 LT. BUILD TYPE "IB" CURB RAMP

STA. 12+41.69, 65.94' RT. TO STA. 12+73.76, 67.68' RT. BUILD HEADER CURB ALONG RIGHT-OF-WAY LINE.

STA. 12+79.80, 68.01' RT. TO STA. 14+98.66, 75.94' RT. BUILD HEADER CURB ALONG RIGHT-OF-WAY LINE.

STA: 14+91.47, 62.00 RT. BUILD TYPE "IB" CURB RAMP

GENERAL NOTES

1. STATIONS AND OFFSETS PROVIDED REFER TO SIDE STREET CENTERLINE AND LIP OF CURB/GUTTER UNLESS OTHERWISE NOTED.
2. CURVE DATA PROVIDED REFERS TO LIP OF CURB/GUTTER UNLESS OTHERWISE NOTED.
3. CURB ELEVATIONS PROVIDED REFER TO LIP OF CURB/GUTTER UNLESS OTHERWISE NOTED.
4. SEE ROADWAY PLAN & PROFILE SHEETS 3–1 TO 3–3 FOR ADDITIONAL INFORMATION.
5. SEE CERRILLOS ROAD LAYOUT PLANS 3–7 TO 3–13 FOR ADDITIONAL INFORMATION.
6. DRIVEPAD STATIONS AND OFFSETS PROVIDED REFER TO SIDESTREET CENTERLINE AND BACK OF CURB. SEE DRIVEPAD DETAILS SHEET 2–14 FOR ADDITIONAL INFORMATION.
7. SEE TURNOUT SECTIONS 4–1 TO 4–4 FOR LENGTH OF DRIVEPAD AND ASPHALT.
8. SEE CERRILLOS ROAD PHASE IIC FINAL RIGHT–OF–WAY MAPS (S100130) DATED APRIL 4, 2014 FOR ADDITIONAL RIGHT–OF–WAY AND TCP INFORMATION.
9. BACK OF HEADER CURB & CUT–OFF WALL DEFINE SLOPE LIMITS, UNLESS OTHERWISE NOTED.

○ KEYED NOTES

1. BUILD CONCRETE BARRIER CURB & GUTTER TYPE B 6"X24", SEE SHEET 13–1 FOR DETAILS.
2. BUILD MODIFIED CONCRETE BARRIER CURB & GUTTER TYPE D 6"X12", SEE SHEET 2–14 FOR DETAILS.
3. BUILD CONCRETE BARRIER CURB & GUTTER TYPE B 6"X18", SEE SHEET 13–1 FOR DETAILS.
4. BUILD CONCRETE VALLEY GUTTER, SEE SHEET 2–14 AND 13–1 FOR DETAILS.
5. BUILD MEDIAN CONCRETE PAVEMENT, SEE SHEET 12–7 FOR DETAILS.
6. BUILD HEADER CURB, SEE SHEET 2–14 FOR DETAILS.
7. BUILD CUT–OFF WALL, SEE SHEET 2–14 FOR DETAILS.
8. BUILD CONCRETE SIDEWALK, SEE SHEET 13–1 FOR DETAILS. MATCH EXISTING SIDEWALK WIDTH.

PROTECT IN PLACE NOTE:
ITEMS IDENTIFIED AS PROTECT IN PLACE SHALL BE PROTECTED BY THE CONTRACTOR. ANY DAMAGES TO THESE ITEMS WILL BE THE RESPONSIBILITY OF THE CONTRACTOR TO REPAIR OR REPLACE SUCH ITEMS AS DIRECTED BY THE CITY PROJECT MANAGER AT NO ADDITIONAL COST TO THE CITY.

RIGHT TURN GRADING DETAIL
SCALE: 1"=10'

CONTOUR INTERVAL: 0.5'

NO.	DESCRIPTION	DATE	BY
3			
2			
1			

REVISIONS (OR CHANGE NOTICES)

JAMES H. BUCKMAN NEW MEXICO 13062 REGISTERED PROFESSIONAL ENGINEER 10/14/15

SCALE HORIZ. 1"=20'

DESIGNED BY: PB	DRAWN BY: PB	CHECKED BY: JB
DATE: 08/07/15	DATE: 08/07/15	DATE: 08/07/15

CITY OF SANTA FE

CERRILLOS ROAD PHASE IIC
CAMINO CARLOS REY TO
LLANO STREET
SANTA FE COUNTY
SIDESTREET LAYOUT PLAN
ST. MICHAELS DRIVE

PARSONS BRINCKERHOFF

CITY OF SANTA FE	SHEET
NEW MEXICO PROJECT NO.	NO.
CN S100130	3–22

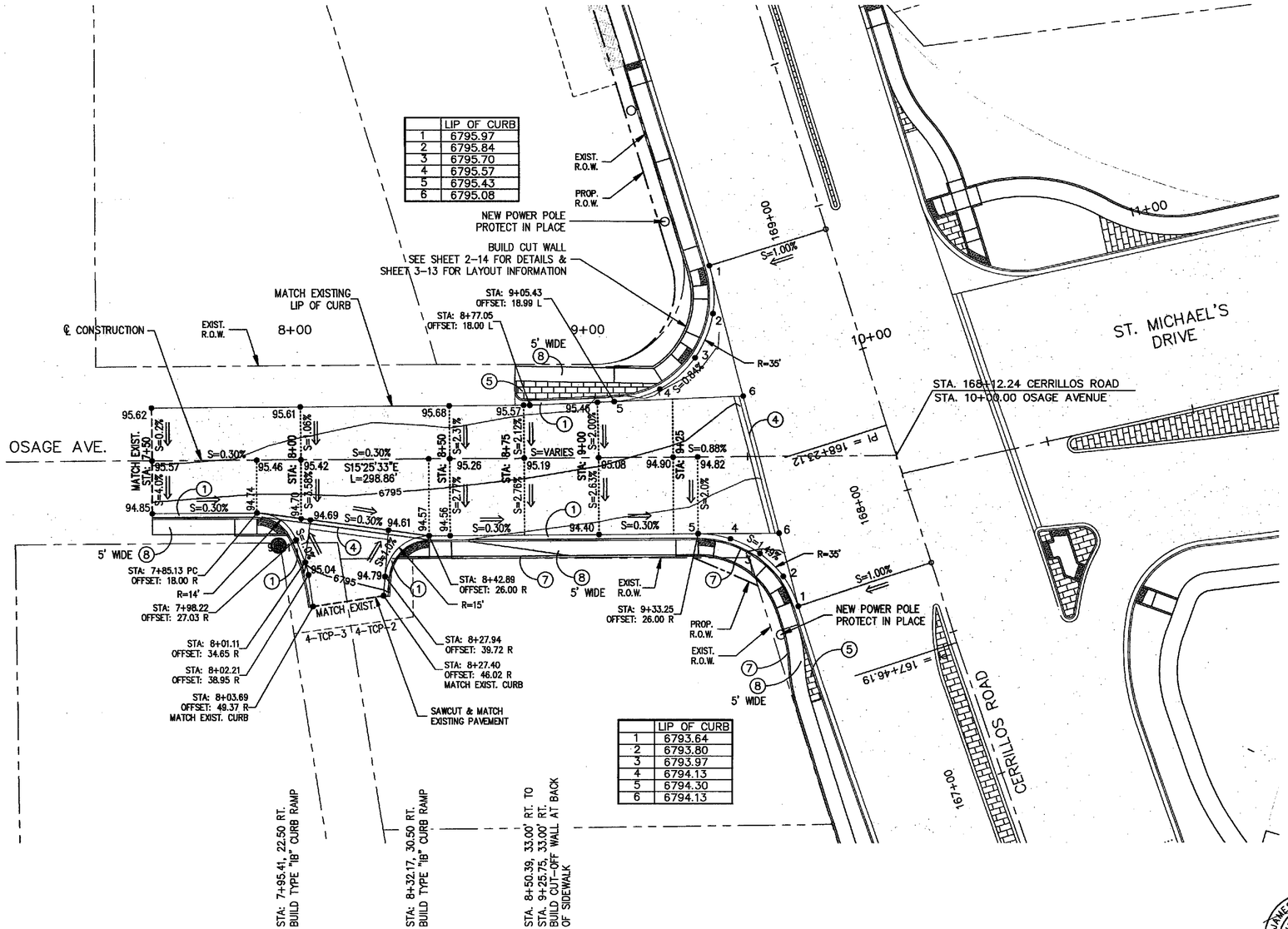

	LIP OF CURB
1	6795.97
2	6795.84
3	6795.70
4	6795.57
5	6795.43
6	6795.08

	LIP OF CURB
1	6793.64
2	6793.80
3	6793.97
4	6794.13
5	6794.30
6	6794.13

GENERAL NOTES

1. STATIONS AND OFFSETS PROVIDED REFER TO SIDE STREET CENTERLINE AND LIP OF CURB/GUTTER UNLESS OTHERWISE NOTED.
2. CURVE DATA PROVIDED REFERS TO LIP OF CURB/GUTTER UNLESS OTHERWISE NOTED.
3. CURB ELEVATIONS PROVIDED REFER TO LIP OF CURB/GUTTER UNLESS OTHERWISE NOTED.
4. SEE ROADWAY PLAN & PROFILE SHEETS 3–1 TO 3–3 FOR ADDITIONAL INFORMATION.
5. SEE CERRILLOS ROAD LAYOUT PLANS 3–7 TO 3–13 FOR ADDITIONAL INFORMATION.
6. DRIVEPAD STATIONS AND OFFSETS PROVIDED REFER TO SIDESTREET CENTERLINE AND BACK OF CURB. SEE DRIVEPAD DETAILS SHEET 2–14 FOR ADDITIONAL INFORMATION.
7. SEE TURNOUT SECTIONS 4–1 TO 4–4 FOR LENGTH OF DRIVEPAD AND ASPHALT.
8. SEE CERRILLOS ROAD PHASE IIC FINAL RIGHT–OF–WAY MAPS (S100130) DATED APRIL 4, 2014 FOR ADDITIONAL RIGHT–OF–WAY AND TCP INFORMATION.
9. BACK OF HEADER CURB & CUT–OFF WALL DEFINE SLOPE LIMITS, UNLESS OTHERWISE NOTED.

○ KEYED NOTES

1. BUILD CONCRETE BARRIER CURB & GUTTER TYPE B 6"X24", SEE SHEET 13–1 FOR DETAILS.
2. BUILD MODIFIED CONCRETE BARRIER CURB & GUTTER TYPE D 6"X12", SEE SHEET 2–14 FOR DETAILS.
3. BUILD CONCRETE BARRIER CURB & GUTTER TYPE B 6"X18", SEE SHEET 13–1 FOR DETAILS.
4. BUILD CONCRETE VALLEY GUTTER, SEE SHEET 2–14 AND 13–1 FOR DETAILS.
5. BUILD MEDIAN CONCRETE PAVEMENT, SEE SHEET 12–7 FOR DETAILS.
6. BUILD HEADER CURB, SEE SHEET 2–14 FOR DETAILS.
7. BUILD CUT–OFF WALL, SEE SHEET 2–14 FOR DETAILS.
8. BUILD CONCRETE SIDEWALK, SEE SHEET 13–1 FOR DETAILS. MATCH EXISTING SIDEWALK WIDTH.

CONTOUR INTERVAL: 0.5'

NO.	DESCRIPTION	DATE	BY
3			
2			
1			

REVISIONS (OR CHANGE NOTICES)

JAMES H. BUCKMAN NEW MEXICO 13062 10/9/15 REGISTERED PROFESSIONAL ENGINEER

PROTECT IN PLACE NOTE:
ITEMS IDENTIFIED AS PROTECT IN PLACE SHALL BE PROTECTED BY THE CONTRACTOR. ANY DAMAGES TO THESE ITEMS WILL BE THE RESPONSIBILITY OF THE CONTRACTOR TO REPAIR OR REPLACE SUCH ITEMS AS DIRECTED BY THE CITY PROJECT MANAGER AT NO ADDITIONAL COST TO THE CITY.

CITY OF SANTA FE

CERRILLOS ROAD PHASE IIC
CAMINO CARLOS REY TO
LLANO STREET
SANTA FE COUNTY
SIDESTREET LAYOUT PLAN
OSAGE AVENUE

SCALE
HORIZ. 1"=20'

DESIGNED BY: PB	DRAWN BY: PB	CHECKED BY: JB
DATE: 08/07/15	DATE: 08/07/15	DATE: 08/07/15

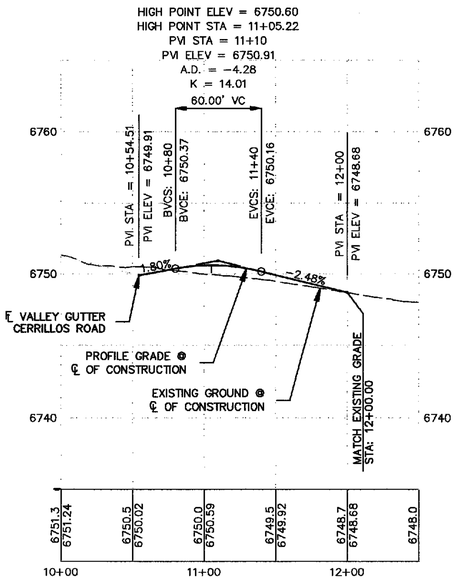

CAMINO CARLOS REY 2
CERRILLOS ROAD STA. 141+25.14

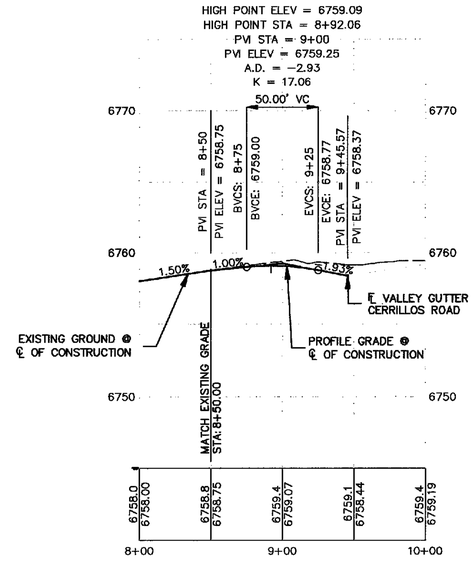

MACLOVIA STREET
CERRILLOS ROAD STA. 146+63.83

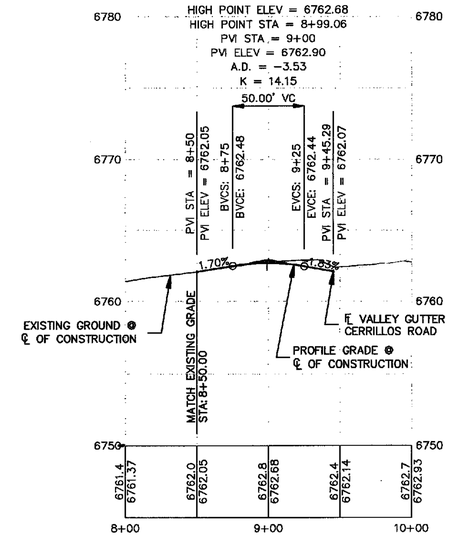

LUANA STREET
CERRILLOS ROAD STA. 149+45.75

JAMES H. BUCKMAN NEW MEXICO 13062 REGISTERED PROFESSIONAL ENGINEER 10/8/15

NO.	DESCRIPTION	DATE	BY
3			
2			
1			

REVISIONS (OR CHANGE NOTICES)

CITY OF SANTA FE

CERRILLOS ROAD PHASE IIC
CAMINO CARLOS REY TO
LLANO STREET
SANTA FE COUNTY

SIDESTREET PROFILES

SCALE
HORIZ. 1"=50'
VERT. 1"=5'

DESIGNED BY: PB	DRAWN BY: PB	CHECKED BY: JB
DATE: 08/07/15	DATE: 08/07/15	DATE: 08/07/15

PARSONS BRINCKERHOFF

CITY OF SANTA FE	SHEET
NEW MEXICO PROJECT NO.	NO.
CN S100130	3-24

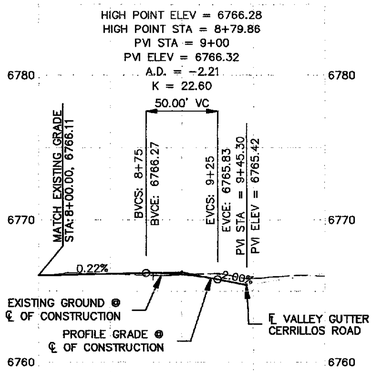

DECLOVINA STREET
CERRILLOS ROAD STA. 152+27.59

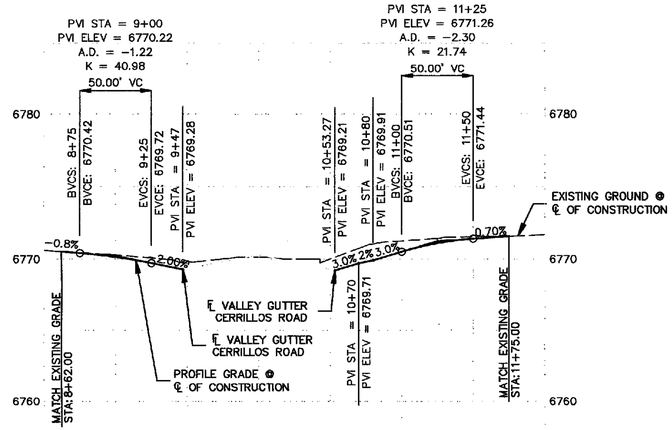

LUJAN STREET
CERRILLOS ROAD STA. 155+23.00

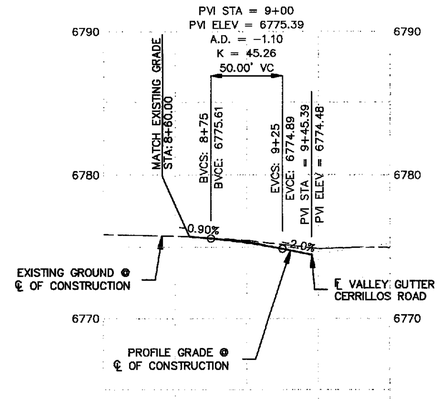

VITALIA STREET
CERRILLOS ROAD STA. 157+91.97

NO.	DESCRIPTION	DATE	BY
3			
2			
1			

REVISIONS (OR CHANGE NOTICES)

JAMES H. BUCKMAN NEW MEXICO 13062 REGISTERED PROFESSIONAL ENGINEER 10/7/15

CITY OF SANTA FE

CERRILLOS ROAD PHASE IIC
CAMINO CARLOS REY TO
LLANO STREET
SANTA FE COUNTY

SIDESTREET PROFILES

SCALE
HORIZ. 1"=50'
VERT. 1"=5'

DESIGNED BY: PB	DRAWN BY: PB	CHECKED BY: JB
DATE: 08/07/15	DATE: 08/07/15	DATE: 08/07/15

J:\33693 Cerrillos Ph IIC\04 Engineering-33693\Plans\3_Sheets\3-23 to 3-25 SideStreet-PNPs_IIC.dwg Oct 06, 2015 - 2:29pm Saved By: millernz

N.M. PROJECT NO. CN S100130 SHEET NO. 3-24

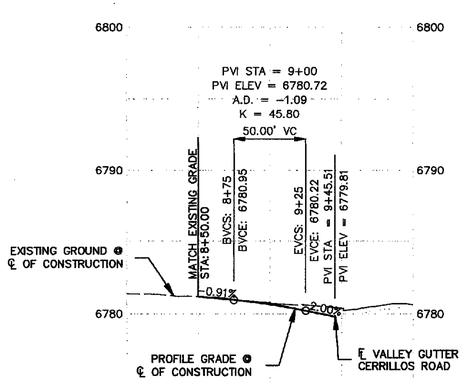

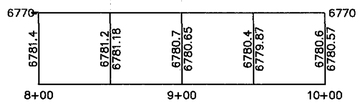

APACHE AVENUE
CERRILLOS ROAD STA. 160+74.31

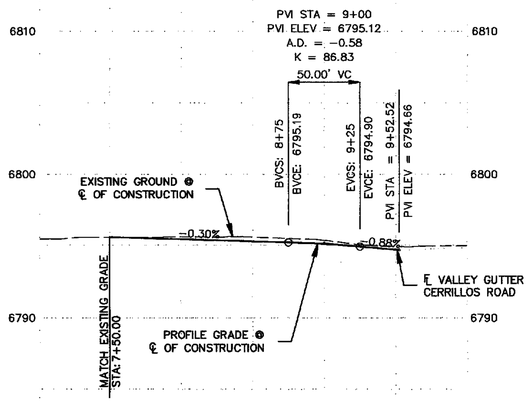

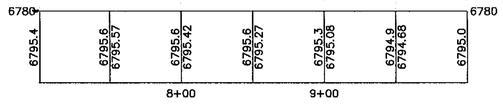

OSAGE AVENUE
CERRILLOS ROAD STA. 168+12.24

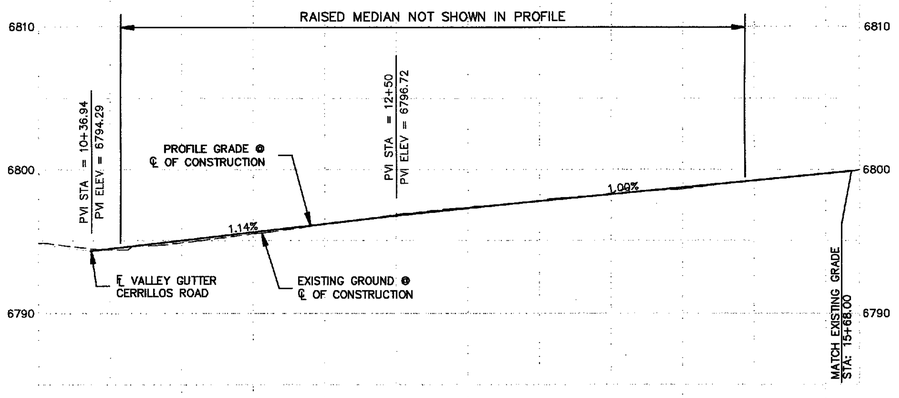

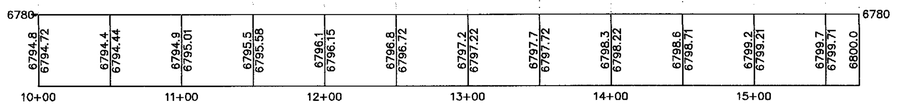

ST. MICHAEL'S DRIVE
CERRILLOS ROAD STA. 168+05.81

NO.	DESCRIPTION	DATE	BY
3			
2			
1			

REVISIONS (OR CHANGE NOTICES)

JAMES H. BUCKMAN NEW MEXICO 13062 REGISTERED PROFESSIONAL ENGINEER 10/9/15

CITY OF SANTA FE

CERRILLOS ROAD PHASE IIC
CAMINO CARLOS REY TO
LLANO STREET
SANTA FE COUNTY

SIDESTREET PROFILES

SCALE
HORIZ. 1"=50'
VERT. 1"=5'

DESIGNED BY: PB	DRAWN BY: PB	CHECKED BY: JB
DATE: 08/07/15	DATE: 08/07/15	DATE: 08/07/15

PARSONS BRINCKERHOFF

CITY OF SANTA FE	SHEET
NEW MEXICO PROJECT NO.	NO.
CN S100130	4–1

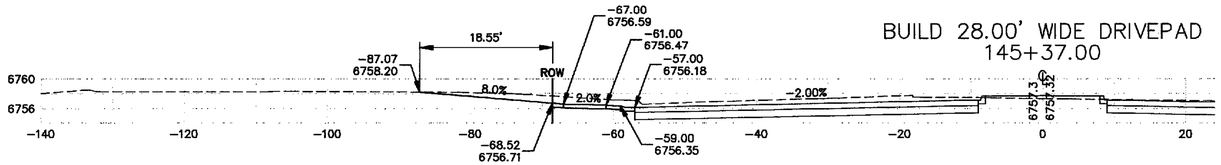

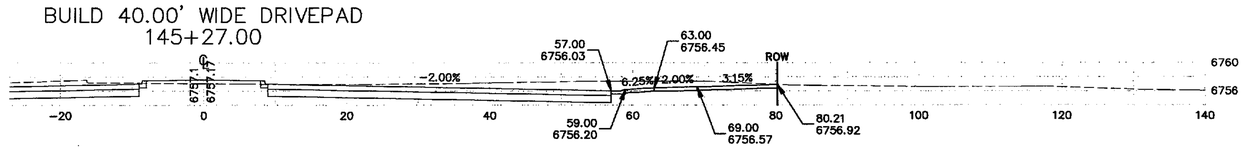

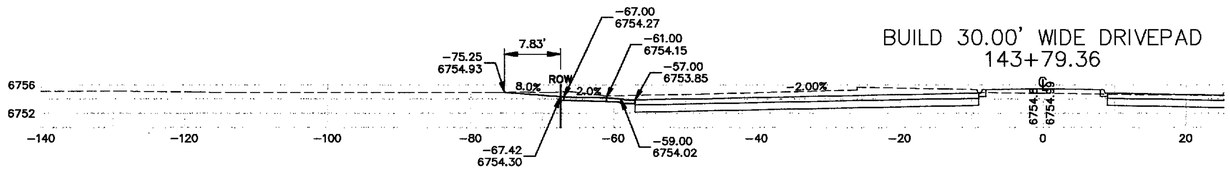

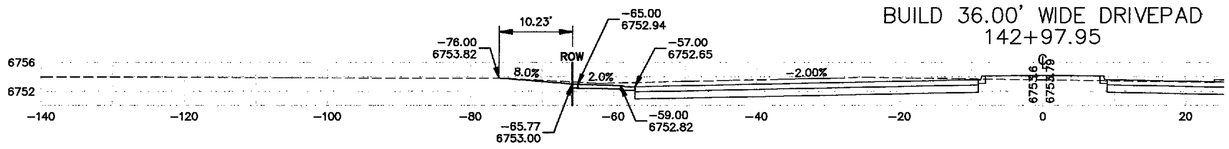

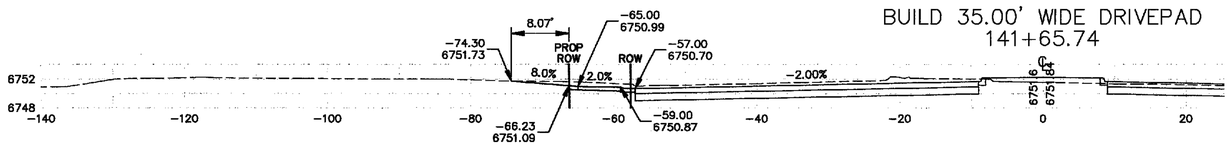

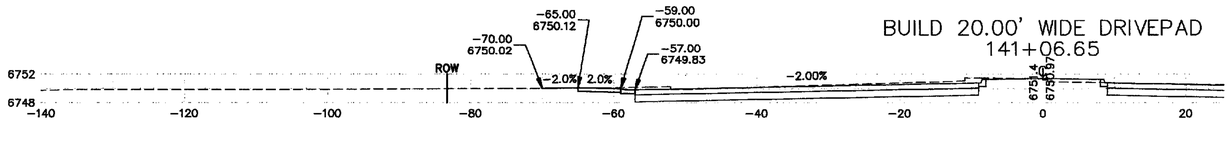

GENERAL NOTES

1. SEE SHEET 2–9 FOR DRIVEPAD SCHEDULE
2. SEE SHEET 2–14 FOR DRIVEPAD DETAILS
3. SEE CERRILLOS ROAD LAYOUT PLANS 3–7 TO 3–13 FOR MEDIAN LAYOUT INFORMATION.
4. SEE CERRILLOS ROAD PHASE IIC FINAL RIGHT–OF–WAY MAPS (S100130) DATED APRIL 4, 2014 FOR ADDITIONAL RIGHT–OF–WAY AND TCP INFORMATION.
5. ELEVATIONS PROVIDED AT BACK OF SIDEWALK ARE BASED ON A 2.0% CALCULATION. SIDEWALK CROSS SLOPES SHALL BE CONSTRUCTED AT 1.5% TO 2.0%

NO.	DESCRIPTION	DATE	BY
3			
2			
1			

REVISIONS (OR CHANGE NOTICES)

JAMES H. BUCKMAN NEW MEXICO 13062 REGISTERED PROFESSIONAL ENGINEER 10/7/15

CITY OF SANTA FE

CERRILLOS ROAD PHASE IIC
CAMINO CARLOS REY TO
LLANO STREET
SANTA FE COUNTY

TURNOUT SECTIONS

SCALE
HORIZ. 1"=10'

DESIGNED BY: PB	DRAWN BY: PB	CHECKED BY: JB
DATE: 08/07/15	DATE: 08/07/15	DATE: 08/07/15

J:\33693 Cerrillos Ph IIC\04 Engineering–33693\Plans\4_Sheets\4–1 to 4–4 driveway–sections_PhIIC.dwg Oct 06, 2015 – 2:41pm Saved By: millernz

N.M. PROJECT NO. CN S100130 SHEET NO. 4–1

PARSONS BRINCKERHOFF

CITY OF SANTA FE	SHEET
NEW MEXICO PROJECT NO.	NO.
CN S100130	4–2

BUILD 45.00' WIDE DRIVEPAD
157+81.72

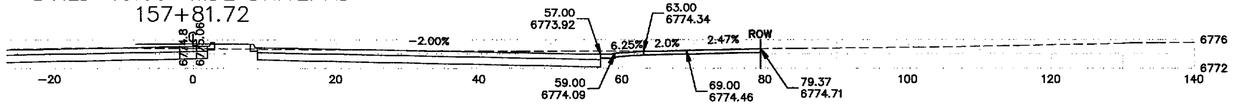

BUILD 31.00' WIDE DRIVEPAD
152+35.47

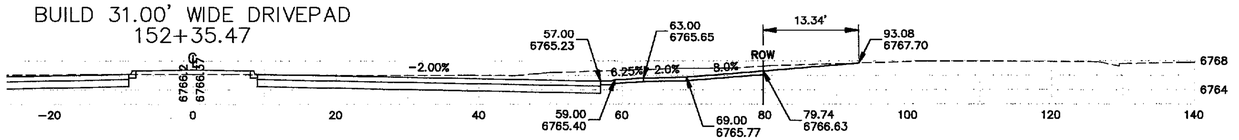

BUILD 25.00' WIDE DRIVEPAD
150+98.00

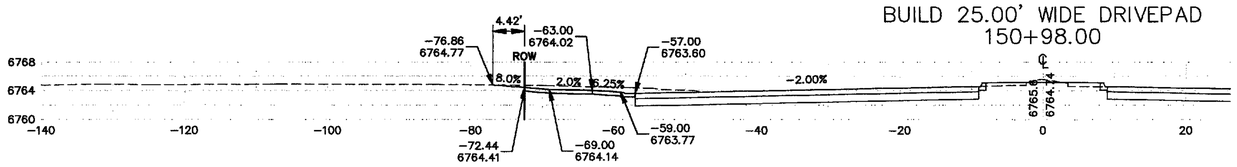

BUILD 20.00' WIDE DRIVEPAD
150+45.00

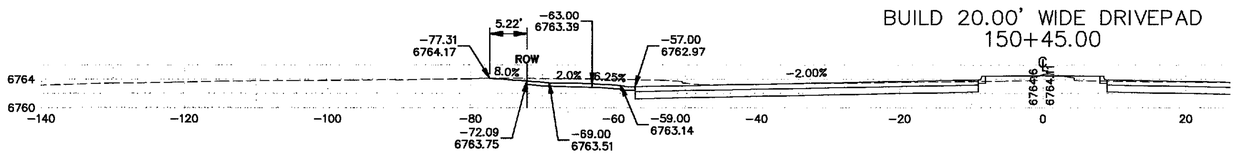

BUILD 45.00' WIDE DRIVEPAD
149+50.25

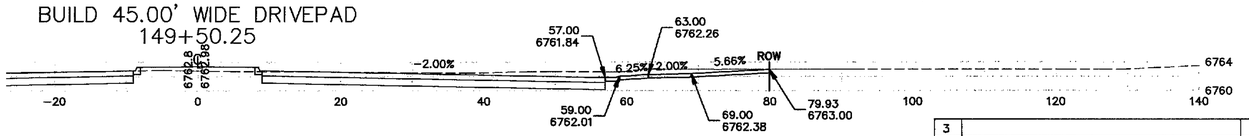

BUILD 25.00' WIDE DRIVEPAD
148+25.00

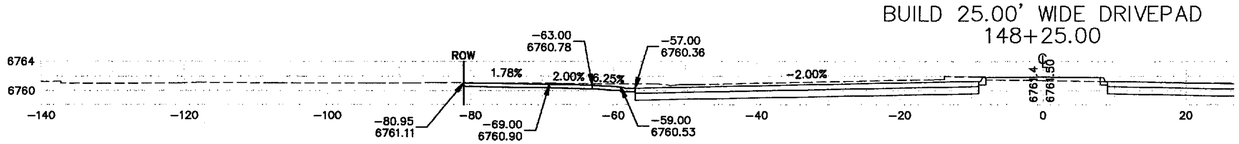

GENERAL NOTES

1. SEE SHEET 2–9 FOR DRIVEPAD SCHEDULE
2. SEE SHEET 2–14 FOR DRIVEPAD DETAILS
3. SEE CERRILLOS ROAD LAYOUT PLANS 3–7 TO 3–13 FOR MEDIAN LAYOUT INFORMATION.
4. SEE CERRILLOS ROAD PHASE IIC FINAL RIGHT–OF–WAY MAPS (S100130) DATED APRIL 4, 2014 FOR ADDITIONAL RIGHT–OF–WAY AND TCP INFORMATION.
5. ELEVATIONS PROVIDED AT BACK OF SIDEWALK ARE BASED ON A 2.0% CALCULATION. SIDEWALK CROSS SLOPES SHALL BE CONSTRUCTED AT 1.5% TO 2.0%

NO.	DESCRIPTION	DATE	BY
3			
2			
1			

REVISIONS (OR CHANGE NOTICES)

JAMES H. BUCKMAN NEW MEXICO 13062 REGISTERED PROFESSIONAL ENGINEER 10/9/15

CITY OF SANTA FE

CERRILLOS ROAD PHASE IIC
CAMINO CARLOS REY TO
LLANO STREET
SANTA FE COUNTY

TURNOUT SECTIONS

SCALE
HORIZ. 1"=10'

DESIGNED BY: PB	DRAWN BY: PB	CHECKED BY: JB
DATE: 08/07/15	DATE: 08/07/15	DATE: 08/07/15

J:\33693 Cerrillos Ph IIC\04 Engineering–33693\Plans\4_Sheets\4–1 to 4–4 driveway–sections_PhIIC.dwg Oct 06, 2015 – 2:42pm Saved By: millernz

N.M. PROJECT NO. CN S100130 SHEET NO. 4–2

PARSONS BRINCKERHOFF

CITY OF SANTA FE	SHEET
NEW MEXICO PROJECT NO.	NO.
CN S100130	4-3

BUILD 25.00' WIDE DRIVEPAD
170+30.84

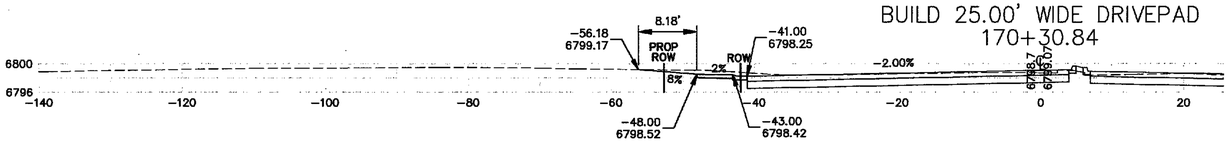

BUILD 24.00' WIDE DRIVEPAD
169+76.50

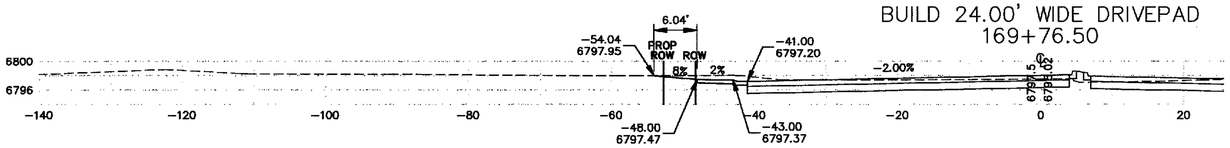

BUILD 25.00' WIDE DRIVEPAD
169+72.05

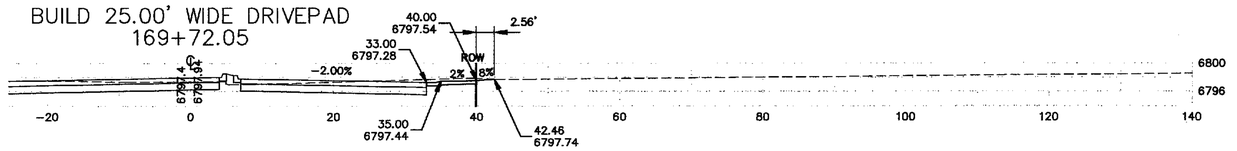

BUILD 40.00' WIDE DRIVEPAD
164+11.00

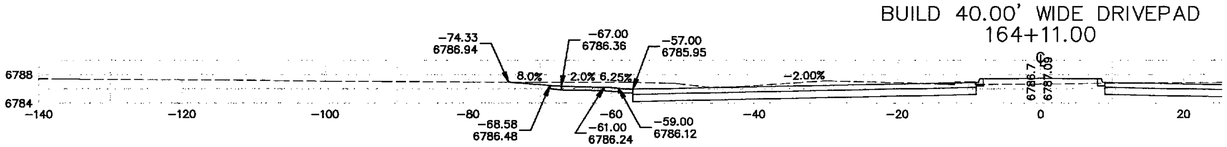

BUILD 33.00' WIDE DRIVEPAD
162+97.36

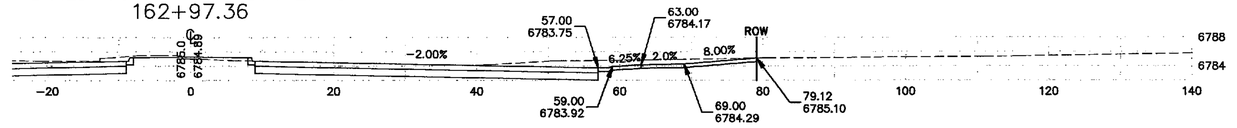

BUILD 25.00' WIDE DRIVEPAD
162+20.00

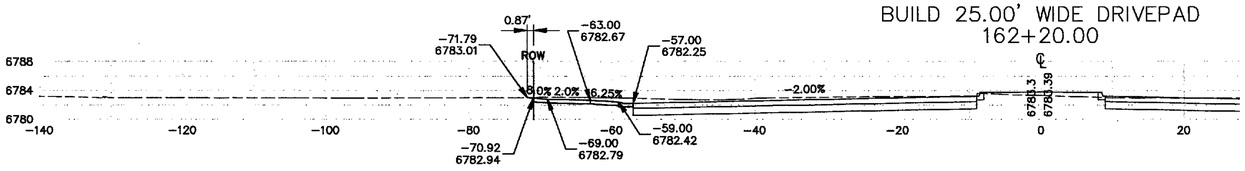

BUILD 36.00' WIDE DRIVEPAD
160+70

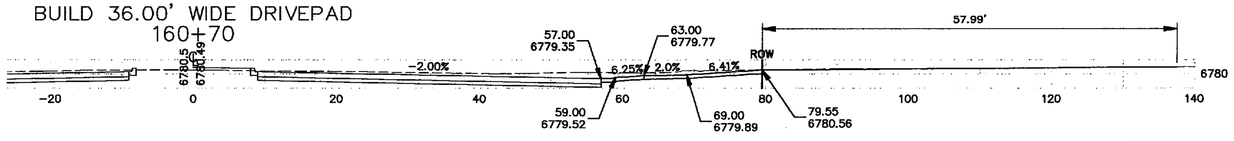

GENERAL NOTES

1. SEE SHEET 2-9 FOR DRIVEPAD SCHEDULE
2. SEE SHEET 2-14 FOR DRIVEPAD DETAILS
3. SEE CERRILLOS ROAD LAYOUT PLANS 3-7 TO 3-13 FOR MEDIAN LAYOUT INFORMATION.
4. SEE CERRILLOS ROAD PHASE IIC FINAL RIGHT-OF-WAY MAPS (S100130) DATED APRIL 4, 2014 FOR ADDITIONAL RIGHT-OF-WAY AND TCP INFORMATION.
5. ELEVATIONS PROVIDED AT BACK OF SIDEWALK ARE BASED ON A 2.0% CALCULATION. SIDEWALK CROSS SLOPES SHALL BE CONSTRUCTED AT 1.5% TO 2.0%

NO.	DESCRIPTION	DATE	BY
3			
2			
1			

REVISIONS (OR CHANGE NOTICES)

JAMES H. BUCKMAN NEW MEXICO 13062 REGISTERED PROFESSIONAL ENGINEER 10/5/15

CITY OF SANTA FE

CERRILLOS ROAD PHASE IIC
CAMINO CARLOS REY TO
LLANO STREET
SANTA FE COUNTY

TURNOUT SECTIONS

SCALE
HORIZ. 1"=10'

DESIGNED BY: PB	DRAWN BY: PB	CHECKED BY: JB
DATE: 08/07/15	DATE: 08/07/15	DATE: 08/07/15

J:\33693 Cerrillos Ph IIC\04 Engineering-33693\Plans\4_Sheets\4-1 to 4-4 driveway-sections_PhIIC.dwg Oct 06, 2015 - 2:42pm Saved By: millernz

N.M. PROJECT NO. CN S100130 SHEET NO. 4-3

PARSONS BRINCKERHOFF

CITY OF SANTA FE	SHEET
NEW MEXICO PROJECT NO.	NO.
CN S100130	4–4

BUILD 30' WIDE DRIVEPAD
8+80.00, APACHE AVE.

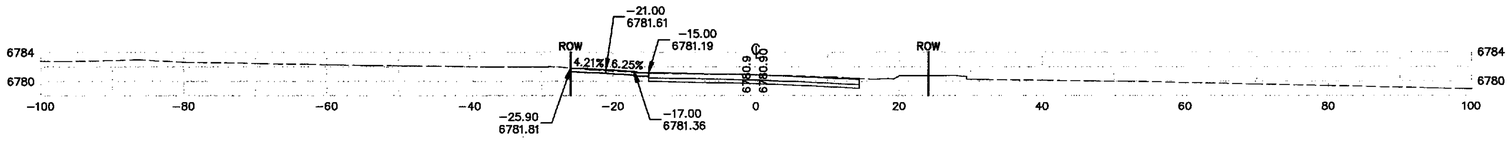

BUILD 18' WIDE DRIVEPAD
8+83.26, VITALIA ST.

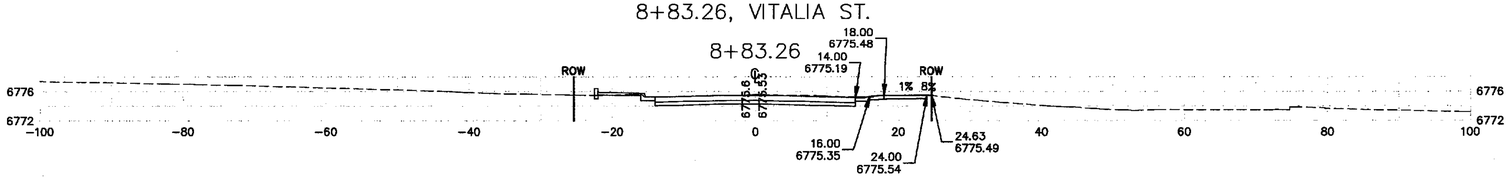

BUILD 16' WIDE DRIVEPAD
8+76.09, LUJAN ST.

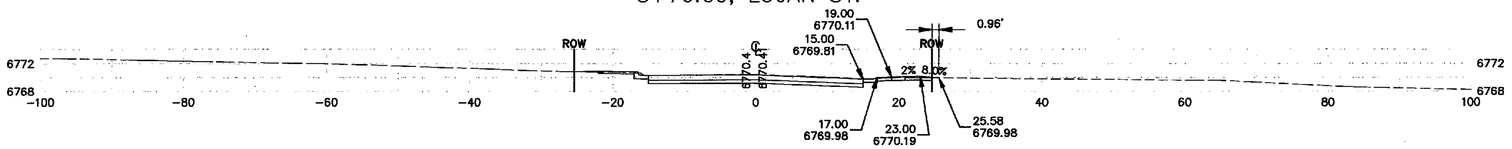

BUILD 30' WIDE DRIVEPAD
9+01.90, DECLOVINA ST.

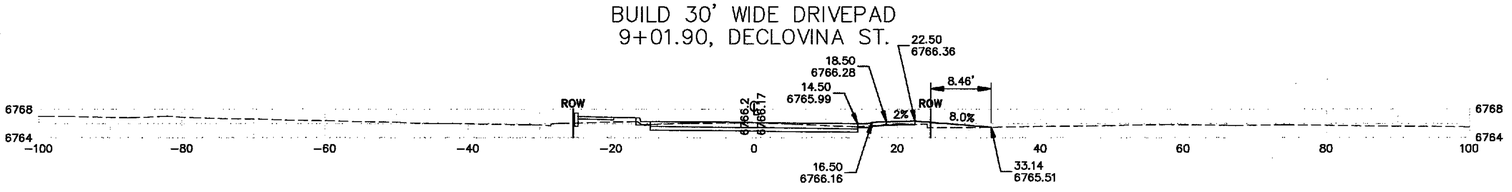

BUILD 30' WIDE DRIVEPAD
8+71.30, MACLOVIA ST.

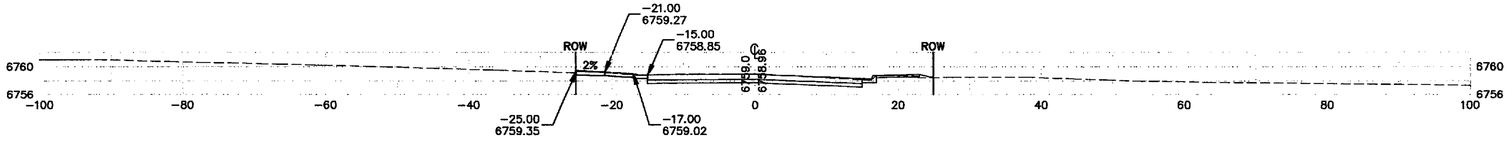

GENERAL NOTES

1. SEE SHEET 2–9 FOR DRIVEPAD SCHEDULE
2. SEE SHEET 2–14 FOR DRIVEPAD DETAILS
3. SEE CERRILLOS ROAD LAYOUT PLANS 3–7 TO 3–13 FOR MEDIAN LAYOUT INFORMATION.
4. SEE CERRILLOS ROAD PHASE IIC FINAL RIGHT–OF–WAY MAPS (S100130) DATED APRIL 4, 2014 FOR ADDITIONAL RIGHT–OF–WAY AND TCP INFORMATION.
5. ELEVATIONS PROVIDED AT BACK OF SIDEWALK ARE BASED ON A 2.0% CALCULATION. SIDEWALK CROSS SLOPES SHALL BE CONSTRUCTED AT 1.5% TO 2.0%
6. SEE SIDESTREET LAYOUT PLANS 3–14 TO 3–22 FOR ADDITIONAL INFORMATION.

NO.	DESCRIPTION	DATE	BY
3			
2			
1			

REVISIONS (OR CHANGE NOTICES)

JAMES H. BUCKMAN NEW MEXICO 13062 REGISTERED PROFESSIONAL ENGINEER 10/9/15

SCALE
HORIZ. 1"=10'

DESIGNED BY: PB	DRAWN BY: PB	CHECKED BY: JB
DATE: 08/07/15	DATE: 08/07/15	DATE: 08/07/15

CITY OF SANTA FE

CERRILLOS ROAD PHASE IIC
CAMINO CARLOS REY TO
LLANO STREET
SANTA FE COUNTY

SIDE STREET
TURNOUT SECTIONS

J:\33693 Cerrillos Ph IIC\04 Engineering–33693\Plans\4_Sheets\4–1 to 4–4 driveway–sections_PhIIC.dwg Oct 06, 2015 – 2:43pm Saved By: millernz

N.M. PROJECT NO. CN S100130 SHEET NO. 4–4

1. RESPONSIBLE PARTY
THE CONTRACTOR SHALL HAVE A CERTIFIED TRAFFIC CONTROL SUPERVISOR ON-SITE DURING WORKING HOURS AND ON CALL DURING NON-WORKING HOURS TO INSPECT AND MAINTAIN PROJECT TRAFFIC CONTROL, OR AS DIRECTED BY THE PROJECT MANAGER.

2. MUTCD
THE CONTRACTOR SHALL ADHERE TO ALL THE REQUIREMENTS LISTED IN THE CURRENT APPROVED EDITION OF THE MANUAL ON UNIFORM TRAFFIC CONTROL DEVICES (MUTCD).

3. STANDARD DRAWINGS
REFER TO THE NMDOT STANDARD DRAWINGS FOR ADDITIONAL TRAFFIC CONTROL NOTES, PLANS, AND DETAILS. SPECIFIC ATTENTION IS MADE TO NOTE #2 "PAVEMENT DROP-OFF GUIDELINE" ON STANDARD DRAWING 702-01-3/3.

4. DEVICE REQUIREMENTS
ALL DEVICES SHALL ADHERE TO THE REQUIREMENTS OF SECTION 702 – TRAFFIC CONTROL DEVICES FOR CONSTRUCTION, IN THE 2014 EDITION OF THE NMDOT SPECIFICATIONS BOOK.

5. CONSTRUCTION SIGNING
ALL CONSTRUCTION SIGNING SHALL BE BLACK ON REFLECTIVE ORANGE UNLESS OTHERWISE SPECIFIED. THE CONTRACTOR SHALL USE TYPE VII, VIII OR IX SHEETING ON ALL CONSTRUCTION SIGNS. ALL CONSTRUCTION BARRICADES AND CHANNELIZATION DEVICES SHALL BE ORANGE ON WHITE REFLECTORIZED UNLESS OTHERWISE SPECIFIED.

6. REMOVING/COVERING OF SIGNS
ALL NON-APPLICABLE SIGNING, WITHIN OR IN ADVANCE OF THE WORK ZONE, SHALL BE REMOVED OR COVERED COMPLETELY WITH AN OPAQUE NON-LIGHT TRANSMITTING MATERIAL. ALL REMAINING, NON-APPLICABLE TRAFFIC CONTROL DEVICES ARE TO BE REMOVED AND STORED AT LOCATIONS DESIGNATED BY THE PROJECT MANAGER. THIS WORK SHALL BE INCIDENTAL TO CONSTRUCTION, AND NO SEPARATE MEASUREMENT OR PAYMENT WILL BE MADE THEREFOR.

7. CLEANING OF SIGNS
ALL TRAFFIC CONTROL DEVICES SHALL BE KEPT CLEAN THROUGHOUT THE DURATION OF CONSTRUCTION. ANY SIGN THAT IS TAGGED BY GRAFFITI SHALL BE CLEANED OR REMOVED AND REPLACED WITHIN 24 HOURS.

8. REMOVAL OF STRIPING
ALL CONFLICTING STRIPING SHALL BE ERADICATED. COVERING EXISTING WHITE AND YELLOW STRIPES WITH BLACK PAINT AS A METHOD OF REMOVAL IS PROHIBITED. THE CONTRACTOR SHALL USE WATER BLASTING ERADICATION FOR STRIPING REMOVAL ONLY ON PAVED SURFACES NOT BEING RECONSTRUCTED, REPAVED, OR RESURFACED. THIS WORK SHALL BE INCIDENTAL TO CONSTRUCTION, AND NO SEPARATE MEASUREMENT OR PAYMENT WILL BE MADE THEREFOR.

9. CONCRETE WALL BARRIER TREATMENT
ALL CONCRETE WALL BARRIER ENDS WITHIN THE CLEAR ZONE MUST BE PROTECTED WITH AN APPROVED CRASH CUSHION ATTENUATOR BASED ON THE APPROPRIATE DESIGN SPEED OF THE ROAD.

10. DRIVING SURFACE
IT IS THE CONTRACTORS RESPONSIBILITY TO PROVIDE A SMOOTH DRIVING SURFACE FREE OF POTHOLES AND OBSTRUCTIONS AND NO ADDITIONAL PAYMENT WILL BE MADE THEREFOR.

11. FLAGGING OPERATIONS
FLAGGING SUPERVISED BY A CERTIFIED TRAFFIC CONTROL SUPERVISOR, SHALL BE PROVIDED AS REQUIRED TO MAINTAIN SAFE ACCESS DURING CONSTRUCTION OR AS DIRECTED BY THE PROJECT MANAGER. FLAGGERS SHALL BE LICENSED AND OPERATIONS IN ACCORDANCE WITH THE MUTCD. THE FLAGGER, APPLICABLE SIGNS AND OTHER RELATED ITEMS SHALL BE INCIDENTAL TO CONSTRUCTION, NO MEASUREMENT OR PAYMENT WILL BE MADE THEREFOR.

FLOODLIGHTS SHALL BE PROVIDED TO MARK FLAGGER STATIONS AT NIGHT AS NEEDED. THIS SHALL BE CONSIDERED INCIDENTAL TO CONSTRUCTION AND NO SEPARATE MEASUREMENT OR PAYMENT WILL BE MADE THEREFOR.

12A. TRAFFIC CONTROL SUBMITTALS
TRAFFIC CONTROL SHEETS INCLUDED IN THE PLANS ARE INTENDED TO ILLUSTRATE THE SUGGESTED TRAFFIC CONTROL CONCEPT. THE CONTRACTOR SHALL BE REQUIRED TO SUBMIT SUPPLEMENTAL TRAFFIC CONTROL PLANS AND DETAILS TO COMPLETE THE WORK. SUPPLEMENTAL TRAFFIC CONTROL PLANS SHALL BE SUBMITTED FOR TEMPORARY DETOURS, MAINTENANCE OF ACCESS, DETAILED CONSTRUCTION PHASING OF INTERSECTIONS, TRAFFIC CONTROL FOR SUB-PHASES OR WORK BETWEEN MAJOR WORK PHASES, AND FOR OTHER OPERATIONS AS REQUIRED BY THE PROJECT MANAGER. TRAFFIC CONTROL SUBMITTALS MUST BE APPROVED BY THE CITY AT LEAST ONE (1) WEEK IN ADVANCE OF FIELD OPERATIONS. PREPARATION OF SUPPLEMENTAL TRAFFIC CONTROL PLANS AND DETAILS SHALL BE INCLUDED IN ITEM 618000 – "TRAFFIC CONTROL MANAGEMENT", AND NO SEPARATE MEASUREMENT OR PAYMENT WILL BE MADE THEREFOR.

12B. TRAFFIC CONTROL PLAN CHANGES
ANY PROPOSED CHANGES TO THE SUGGESTED CONSTRUCTION SEQUENCE AND/OR TRAFFIC CONTROL PLAN MUST BE SUBMITTED BY THE CONTRACTOR TO THE PROJECT MANAGER FOR APPROVAL. NO PAYMENT WILL BE MADE FOR ANY ADDITIONAL COSTS RESULTING FROM CHANGES TO THE CONSTRUCTION SEQUENCE OR TRAFFIC CONTROL PLAN. THE CONTRACTOR SHALL BE REQUIRED TO SUBMIT A LETTER OF JUSTIFICATION FOR THE CHANGES WITH THE FOLLOWING ITEMS INCLUDED:

- A REVISED TRAFFIC CONTROL PLAN INCLUDING A SUMMARY OF QUANTITIES AND A COST ESTIMATE.
- THE REVISED TRAFFIC CONTROL PLAN SHALL BE DRAFTED ON 11" x 17" PAPER AND SEALED BY A NEW MEXICO LICENSED ENGINEER. THE SUBMITTAL PAPER SHALL MEET CURRENT DRAFTING STANDARDS.
- CHANGES TO THE TRAFFIC CONTROL PLAN MUST BE APPROVED BY THE CITY AT LEAST ONE (1) WEEK IN ADVANCE OF IMPLEMENTING CHANGES IN THE FIELD.

13. MAINTENANCE OF ACCESS
ACCESS TO ALL INTERSECTING ROADS, RESIDENCES, BUSINESSES, INSTITUTIONS AND PROPERTIES SHALL BE MAINTAINED AT ALL TIMES DURING CONSTRUCTION. LEFT TURNS WILL BE PROHIBITED DURING CONSTRUCTION, EXCEPT AT SIGNALIZED INTERSECTIONS. HOWEVER, ACCESS TO PROPERTIES MUST BE MAINTAINED FROM THE ADJACENT TRAVEL LANES, WHICH ARE ON THE OPPOSITE SIDE OF THE WORK ZONE IN PHASES B AND C.

REFER TO DETAIL SHEET 6-9, FOR TYPICAL ACCESS CONFIGURATIONS. THE ATTACHED TRAFFIC CONTROL PLANS DETAIL THE SUGGESTED SEQUENCE OF CONSTRUCTION, BUT DO NOT PROVIDE SPECIFICS FOR MAINTAINING ACCESS. IT SHALL BE THE RESPONSIBILITY OF THE CONTRACTOR TO DETERMINE CONFIGURATIONS THAT ARE APPROPRIATE AND COMPATIBLE WITH THE CONTRACTOR'S INTENDED WORK PLAN. A MAINTENANCE OF ACCESS PLAN SHALL BE PREPARED AND SUBMITTED TO THE PROJECT MANAGER FOR APPROVAL AT LEAST TWO WEEKS PRIOR TO INITIATING THE WORK.

IF TEMPORARY ACCESS CLOSURES ARE REQUIRED, THE CONTRACTOR SHALL REQUEST APPROVAL INCLUDING THE SPECIFIED DURATION OF THE CLOSURE FROM THE PROJECT MANAGER AT LEAST ONE (1) WEEK PRIOR TO STARTING WORK. UPON APPROVAL, THE CONTRACTOR SHALL COORDINATE CLOSURES WITH AFFECTED PROPERTY OWNERS AND THE PROJECT MANAGER AT LEAST 48 HOURS IN ADVANCE.

WHERE ACCESSES TO BUSINESSES, INSTITUTIONS OR COMMERCIAL AREAS ARE AFFECTED, THE CONTRACTOR SHALL PROVIDE SIGNING TO DIRECT TRAFFIC TO THE ACCESS FOR THESE AREAS. SIGNS SHALL BE RECTANGULAR, COLORED WHITE LETTERS ON BLUE BACKGROUND, DESIGNED CONSISTENT FOR INTERSECTING AND CROSSING TRAFFIC. ROAD OR STREET CROSSINGS SHALL NOT BE BLOCKED OR UNDULY RESTRICTED UNLESS APPROVED BY THE PROJECT MANAGER. ACCESS FOR ESSENTIAL SERVICES, SUCH AS EMERGENCY RESPONSE, TRASH PICKUP AND MAIL DELIVERY, SHALL BE MAINTAINED.

14. PEDESTRIAN ACCESS
THE CONTRACTOR SHALL PROVIDE AND MAINTAIN SAFE AND ADEQUATE MEANS OF CHANNELIZING PEDESTRIAN TRAFFIC WITHIN THE PROJECT LIMITS DURING CONSTRUCTION. SEE PEDESTRIAN ACCESS PLAN ON SHEET 6-4A & 6-4B. ACCESS MUST BE PROVIDED ALONG ONE OR BOTH SIDES OF CONSTRUCTION AT ALL TIMES. MARKED CROSSINGS MUST BE PROVIDED AT ALL SIGNALIZED INTERSECTIONS. THIS WORK MAY INCLUDE TEMPORARY WALKWAYS, SIGNING, PROTECTIVE RAILING, AND PLACEMENT OF CONCRETE WALL BARRIER.

THE CONTRACTOR SHALL COMPLY WITH THE MANUAL ON UNIFORM TRAFFIC CONTROL DEVICES (MUTCD) – CURRENT APPROVED EDITION; WITH SPECIFIC REFERENCE MADE TO SECTIONS 6D.01 THRU 6D.02 AND SECTION 6G.05 REGARDING MAINTAINING PEDESTRIAN ACCESS DURING CONSTRUCTION. TEMPORARY PEDESTRIAN FACILITIES SHALL BE DETECTABLE AND ALL CONSTRUCTED ADA FACILITIES MUST MEET THE PROPOSED ACCESSIBILITY GUIDELINES FOR PEDESTRIAN FACILITIES IN THE PUBLIC RIGHT-OF -WAY (PROWAG), JULY 26, 1990.

COSTS FOR ALL LABOR AND MATERIALS REQUIRED TO MAINTAIN PEDESTRIAN ACCESS SHALL BE INCIDENTAL TO ITEM 618000: TRAFFIC CONTROL MANAGEMENT, AND NO SEPARATE MEASUREMENT OR PAYMENT WILL BE MADE.

15. WORK ZONE RESTRICTIONS
UNLESS OTHERWISE APPROVED BY THE PROJECT MANAGER, THE CONTRACTOR SHALL BE LIMITED TO CONSTRUCTION ACTIVITIES, PER THE FOLLOWING:

A. INTERSECTION WORK

1. NO MORE THAN ONE SIGNALIZED INTERSECTION MAY BE UNDER CONSTRUCTION AT A TIME.

2. THE CONTRACTOR MAY TEMPORARILY, PARTIALLY CLOSE AN INTERSECTION APPROACH FOR A PERIOD OF UP TO 48 HOURS IN ORDER TO COMPLETE STORM DRAIN AND UTILITY WORK. CLOSURES, ALONG WITH TRAFFIC CONTROL/DETOUR PLANS AS REQUIRED, MUST BE APPROVED BY THE PROJECT MANAGER AT LEAST TWO WEEKS IN ADVANCE.

3. SEE SHEET 6-2, NOTE #19 FOR ADDITIONAL DETAILS REGARDING RESTRICTIONS AND ALLOWABLE CLOSURES TO CONSTRUCT THE STORM DRAIN ACROSS THE ST. MICHAEL'S DRIVE INTERSECTION.

B. SIDE-STREET WORK

1. THE CONTRACTOR MAY TEMPORARILY CLOSE A SIDE-STREET APPROACH FOR A PERIOD OF UP TO 48 HOURS IN ORDER TO COMPLETE IMPROVEMENTS. CLOSURES, ALONG WITH TRAFFIC CONTROL/DETOUR PLANS AS REQUIRED, MUST BE APPROVED BY THE PROJECT MANAGER AT LEAST TWO WEEKS IN ADVANCE.

2. NO MORE THAN ONE SIDE-STREET MAY BE CLOSED AT A TIME.

C. STORM DRAIN WORK SEGMENTS

IN ORDER TO MINIMIZE IMPACTS TO BUSINESSES AND ADJACENT PROPERTIES, THE CONTRACTOR MUST BUILD THE STORM DRAIN TRUNK ONE SEGMENT AT A TIME. THE STORM DRAIN MUST BE COMPLETELY INSTALLED AND BACKFILLED BEFORE PROCEEDING TO THE NEXT SEGMENT. FOR THE PURPOSES OF THIS REQUIREMENT THERE ARE TWO SEGMENTS ON THE PROJECT:

1. SEGMENT 1: CAMINO CARLOS REY (B.O.P.) TO LUJAN STREET
2. SEGMENT 2: LUJAN STREET TO LLANO ST. (E.O.P.)

PARSONS BRINCKERHOFF

CITY OF SANTA FE	SHEET
NEW MEXICO PROJECT NO.	NO.
CN S100130	6-1

NO.	DESCRIPTION	DATE	BY
3			
2			
1			

REVISIONS (OR CHANGE NOTICES)

RODERICK C. ADAMS
NEW MEXICO
14218
10/6/15
REGISTERED PROFESSIONAL ENGINEER

CITY OF SANTA FE

CERRILLOS ROAD PHASE IIC
CAMINO CARLOS REY TO
LLANO STREET
SANTA FE COUNTY

TRAFFIC CONTROL GENERAL NOTES

DESIGNED BY: PB	DRAWN BY: PB	CHECKED BY: JB
DATE: 08/07/15	DATE: 08/07/15	DATE: 08/07/15

J:\33693 Cerrillos Ph IIC\04 Engineering-33693\Plans\6_Sheets\6-1 to -2 TC-NOTES.dwg Oct 06, 2015 - 8:06am Saved By: AdamsR

N.M. PROJECT NO. CN S100130 SHEET NO. 6-1

PARSONS BRINCKERHOFF

CITY OF SANTA FE	SHEET
NEW MEXICO PROJECT NO.	NO.
CN S100130	6-2

16. BUS SERVICE
THE CONTRACTOR SHALL CONTACT THE CITY OF SANTA FE TRANSIT DEPARTMENT (CASEY PADILLA: 505-955-2006) TO COORDINATE THE TEMPORARY REMOVAL OR RELOCATION OF BUS STOPS AS REQUIRED DURING CONSTRUCTION. DETERMINATION FOR REMOVAL OR RELOCATION OF BUS STOPS SHALL BE AT THE SOLE DISCRETION OF THE CITY OF SANTA FE.

TEMPORARY BUS STOPS PROVIDED SHALL INCLUDE 5'X8' WHEELCHAIR LANDINGS CONSTRUCTED OF COMPACTED GRAVEL OR TEMPORARY ASPHALT AND SHALL MEET A.D.A. REQUIREMENTS.

17. DRAINAGE DURING CONSTRUCTION
THE CONTRACTOR SHALL PROVIDE FOR ADEQUATE DRAINAGE, FREE OF PONDING, WITHIN THE LIMITS OF THE PROJECT DURING CONSTRUCTION. THIS SHALL INCLUDE CERRILLOS ROAD AND ANY TEMPORARY FACILITIES, ACCESS/SIDE ROADS, OR DRIVEWAYS CONSTRUCTED FOR THE PROJECT. THIS WORK, WHICH MAY REQUIRE TEMPORARY DRAINAGE CONSTRUCTION, PUMPING, OR OTHER METHODS, WILL BE CONSIDERED INCIDENTAL TO COMPLETION OF THE PROJECT AND NO SEPARATE MEASUREMENT OR PAYMENT WILL BE MADE. DIVERSION OF DRAINAGE ONTO PRIVATE PROPERTY WILL NOT BE PERMITTED.

18. PAVING OPERATIONS
UNLESS OTHERWISE APPROVED BY THE PROJECT MANAGER, THE CONTRACTOR SHALL PERFORM PAVING OPERATIONS DURING NON-RESTRICTED HOURS IN ORDER TO MINIMIZE IMPACTS TO ADJACENT BUSINESSES.

19. TRAFFIC CONTROL FOR STORM DRAIN INSTALLATION AT ST. MICHAELS' DRIVE
THE CONTRACTOR SHALL SUBMIT A PROPOSED TRAFFIC CONTROL PLAN TO COMPLETE STORM DRAIN INSTALLATION AT ST. MICHAEL'S DRIVE DURING PHASE D-I. THIS WORK SHALL BE COMPLETED DURING A SERIES OF NO MORE THAN FIVE (5) CONSECUTIVE WEEKDAY NIGHT CLOSURES (8:30 PM TO 5:30 AM, UNLESS OTHERWISE APPROVED BY THE PROJECT MANAGER).

THE FOLLOWING TRAFFIC MOVEMENTS SHALL BE MAINTAINED DURING THE NIGHT CLOSURE WORK (SEE SCHEMATIC DIAGRAM BELOW):

A. AT LEAST ONE THROUGH LANE IN EACH DIRECTION OF CERRILLOS ROAD
B. ONE LEFT TURN LANE FOR ST. MICHAEL'S DRIVE APPROACHING CERRILLOS ROAD (TEMPORARILY ALIGNED TO TURN PRIOR TO THE STORM DRAIN WORK BEFORE SHIFTING WEST TO JOIN SOUTHBOUND CERRILLOS)
C. RIGHT-TURN MOVEMENTS SHALL BE MAINTAINED FOR EACH APPROACH

AT THE COMPLETION OF EACH NIGHT CLOSURE, ALL LANES SHOWN ON SHEET 6-21 MUST BE RE-OPENED TO TRAFFIC.

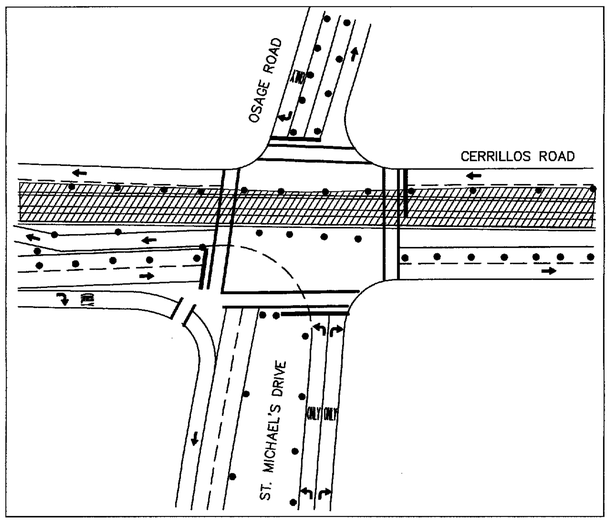

MAINTENANCE OF TRAFFIC
RESTRICTED HOURS, REQUIREMENTS, LANE IMPACTS, & DESIGN CRITERIA

RESTRICTED HOURS FOR LANE CLOSURES:
RESTRICTED HOURS FOR LANE CLOSURES ON THE PROJECT ARE BETWEEN 6:30 AM TO 6:30 PM.

MAINTENANCE OF TRAFFIC REQUIREMENTS:

A. NUMBER OF LANES:
THE CONTRACTOR SHALL PROVIDE TWO OPEN DRIVING LANES OF TRAVEL IN BOTH DIRECTIONS OF CERRILLOS ROAD DURING RESTRICTED HOURS.

B. ALLOWABLE CLOSURES:
THE CONTRACTOR MAY BE ALLOWED TO SETUP LANE CLOSURES DURING NON-RESTRICTED HOURS UPON APPROVAL OF THE PROJECT MANAGER.

C. LEFT TURN LANES:
LEFT-TURN LANES (MINIMUM 10' WIDE) SHALL BE PROVIDED AT SIGNALIZED INTERSECTIONS AS INDICATED ON THE PLANS. THE CONTRACTOR SHALL ENSURE THAT CONFLICTS DO NOT EXIST FOR OPPOSING TURNING MOVEMENTS AT TEMPORARY SIGNALIZED INTERSECTIONS.

D. MINIMUM PAVED WIDTHS:
THE CONTRACTOR SHALL PROVIDE A TYPICAL MINIMUM PAVED WIDTH OF 49 FEET IN ORDER TO MAINTAIN TRAFFIC. A MINIMUM WIDTH OF 59 FEET SHALL BE PROVIDED AT INTERSECTIONS IN ORDER TO ACCOMMODATE LEFT TURN MOVEMENTS.

E. WORK ZONE RESTRICTIONS:
SEE TRAFFIC CONTROL NOTE #15, SHEET 6-1.

LANE IMPACTS
IF AN APPROVED CLOSURE IS NOT REOPENED TO TRAFFIC BY THE REQUIRED TIME, OR EXTENDS INTO THE RESTRICTED HOURS PERIOD, THE CONTRACTOR SHALL BE ASSESSED LANE IMPACT FEES AT A RATE OF $2,000 PER HOUR PER LANE, OR $1,000 PER EACH HALF HOUR/PER LANE OR FRACTION THEREOF. UNAPPROVED LANE CLOSURES SHALL ALSO BE SUBJECT TO THE ABOVE IMPACT FEES. EXCEPTIONS TO THESE IMPACT FEES MAY BE GRANTED AT THE SOLE DISCRETION OF THE PROJECT MANAGER.

MAINTENANCE OF TRAFFIC DESIGN CRITERIA:

A. DESIGN REFERENCES:

DESIGN OF ALL DETOURS AND TEMPORARY ROADWAY AND PEDESTRIAN CONSTRUCTION SHALL CONFORM TO:

1. A POLICY ON GEOMETRIC DESIGN OF HIGHWAYS AND STREETS, AASHTO, CURRENT APPROVED EDITION
2. ROADSIDE DESIGN GUIDE, AASHTO, CURRENT APPROVED EDITION
3. MANUAL ON UNIFORM TRAFFIC CONTROL DEVICES, FHWA, CURRENT APPROVED EDITION
4. NMDOT PAVEMENT DROP-OFF POLICY, CURRENT APPROVED EDITION
5. NMDOT STANDARD DRAWING SERIALS, CURRENT APPROVED EDITION
6. ACCESSIBILITY GUIDELINES FOR PEDESTRIAN FACILITIES IN THE PUBLIC RIGHT-OF-WAY (PROWAG), JULY 26, 1990

B. DESIGN VEHICLE:
TRAFFIC CONTROL MUST ACCOMMODATE THE WB-40 DESIGN VEHICLE.

C. DESIGN SPEED:
TRAFFIC CONTROL DESIGN SHALL MEET/EXCEED MINIMUM REQUIREMENTS FOR 30 MPH POSTED SPEED.

D. LANE WIDTHS:
DRIVING LANES SHALL BE A MINIMUM OF 11 FEET WIDE. LEFT TURN LANES, WHERE PROVIDED, SHALL BE A MINIMUM OF 10 FEET WIDE.

RODERICK C. ADAMS
NEW MEXICO
14218
REGISTERED PROFESSIONAL ENGINEER
10/6/15

NO.	DESCRIPTION	DATE	BY
3			
2			
1			

REVISIONS (OR CHANGE NOTICES)

CITY OF SANTA FE

CERRILLOS ROAD PHASE IIC
CAMINO CARLOS REY TO
LLANO STREET
SANTA FE COUNTY

TRAFFIC CONTROL GENERAL NOTES

DESIGNED BY: PB	DRAWN BY: PB	CHECKED BY: JB
DATE: 08/07/15	DATE: 08/07/15	DATE: 08/07/15

PARSONS BRINCKERHOFF

CITY OF SANTA FE	SHEET
NEW MEXICO PROJECT NO.	NO.
CN S100130	6-3

TRAFFIC CONTROL PAY ITEMS			
ITEM NO.	DESCRIPTION	UNIT	QUANTITY
405000	DETOUR PAVEMENT CONSTRUCTION	SQ.YD.	3,900
606610	TEMPORARY CWB RETAINED BY THE CONTRACTOR	LIN.FT.	2,800
606619	RESETTING OF CONCRETE WALL BARRIER	LIN.FT.	2,800
618000	TRAFFIC CONTROL MANAGEMENT	L.S.	L.S.
702610	PORTABLE CHANGEABLE MESSAGE SIGN	EACH	3
702700	TEMPORARY SIGNAL SPAN	L.S.	L.S.
702810	TRAFFIC CONTROL DEVICES FOR CONSTRUCTION	L.S.	L.S.
720060	VEHICULAR IMPACT ATTENUATOR UNIT - WORK ZONES	EACH	12
720110	REMOVE AND RESET VEHICULAR IMPACT ATTENUATOR UNIT	EACH	18

NOTES:
1. THREE PORTABLE CHANGEABLE MESSAGE SIGNS ARE REQUIRED FOR THE PROJECT. SEE SHEET 6-8 FOR DETAILS. THESE MESSAGE BOARDS SHALL BE RETAINED BY THE CONTRACTOR UPON PROJECT COMPLETION.
2. VEHICULAR IMPACT ATTENUATORS SUPPLIED SHALL BE THE WORK ZONE TYPE N-E-A-T SYSTEM UNITS PER THE DEPARTMENTS APPROVED PRODUCTS LIST. SEE STANDARD DRAWING 720-10-2/3.
3. PEDESTRIAN ACCESS / DETOURS SHALL BE INCIDENTAL TO ITEM 618000: TRAFFIC CONTROL MANAGEMENT; AND NO SEPARATE MEASUREMENT OR PAYMENT WILL BE MADE. SEE SHEET 6-1, NOTE #14.

ITEM 702810 TRAFFIC CONTROL DEVICES FOR CONSTRUCTION (L.S.) SCHEDULE OF ESTIMATED QUANTITIES			
SUPPORTING SECTION	DEVICE DESCRIPTION	UNIT	ESTIMATED QTY.
SECTION 702 - TRAFFIC CONTROL DEVICES FOR CONSTRUCTION			
SS 702	CONSTRUCTION SIGNING	SQ. FT.	2,000
SS 702	STEEL POSTS AND BASE POSTS FOR CONSTRUCTION SIGNING	LIN. FT.	4,000
SS 702	BARRICADE, TYPE III-8'	EACH	30
SS 702	VERTICAL PANEL, TYPE BACK TO BACK	EACH	150
SS 702	PORTABLE SIGN SUPPORT	EACH	40
SS 702	CHANNELIZATION DEVICES TYPE DRUM	EACH	400
SS 702	SEQUENTIAL ARROW DISPLAY	EACH	4
SECTION 704 - PAVEMENT MARKINGS			
SS 704	TEMPORARY STRIPING	LIN. FT.	50,000
SS 704	TEMPORARY WORD OR SYMBOL	EACH	180
SECTION 721 - PAVEMENT MARKING REMOVAL			
SS 721	REMOVAL OF PAVEMENT STRIPE	LIN. FT.	30,000
SS 721	REMOVAL OF WORD OR SYMBOL	EACH	150

NOTE:
ESTIMATED QUANTITIES INDICATED FOR ITEM 702810: TRAFFIC CONTROL DEVICES FOR CONSTRUCTION ARE FOR INFORMATION OF THE CONTRACTOR ONLY. PAYMENT FOR ALL TRAFFIC CONTROL DEVICES REQUIRED DURING CONSTRUCTION SHALL BE INCLUDED IN ITEM 702810: TRAFFIC CONTROL DEVICES FOR CONSTRUCTION, AND NO SEPARATE MEASUREMENT OR PAYMENT WILL BE MADE THEREFOR.

NO.	DESCRIPTION	DATE	BY
3			
2			
1			

REVISIONS (OR CHANGE NOTICES)

RODERICK C. ADAMS — NEW MEXICO — 14218 — REGISTERED PROFESSIONAL ENGINEER — 10/6/15

CITY OF SANTA FE

CERRILLOS ROAD PHASE IIC
CAMINO CARLOS REY TO
LLANO STREET
SANTA FE COUNTY

TRAFFIC CONTROL
QUANTITIES

DESIGNED BY: PB	DRAWN BY: PB	CHECKED BY: JB
DATE: 08/07/15	DATE: 08/07/15	DATE: 08/07/15

PARSONS BRINCKERHOFF

CITY OF SANTA FE	SHEET
NEW MEXICO PROJECT NO.	NO.
CN S100130	6-4

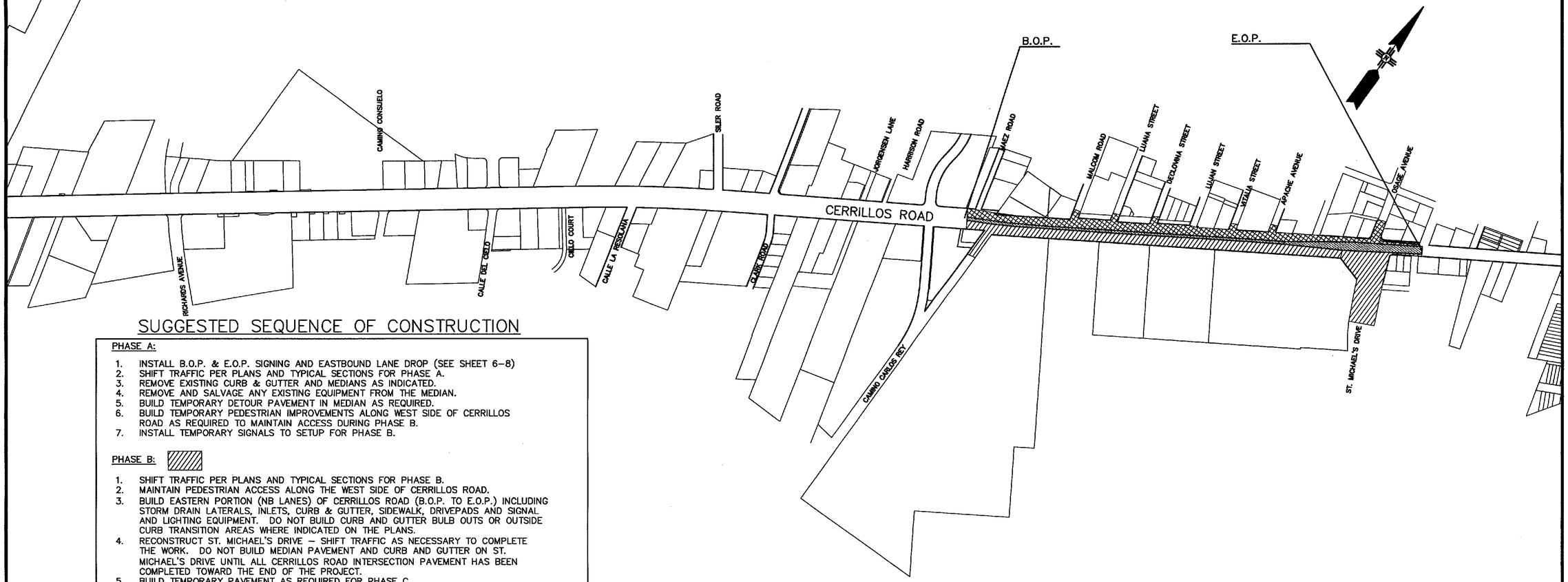

SUGGESTED SEQUENCE OF CONSTRUCTION

PHASE A:

1. INSTALL B.O.P. & E.O.P. SIGNING AND EASTBOUND LANE DROP (SEE SHEET 6-8)
2. SHIFT TRAFFIC PER PLANS AND TYPICAL SECTIONS FOR PHASE A.
3. REMOVE EXISTING CURB & GUTTER AND MEDIANS AS INDICATED.
4. REMOVE AND SALVAGE ANY EXISTING EQUIPMENT FROM THE MEDIAN.
5. BUILD TEMPORARY DETOUR PAVEMENT IN MEDIAN AS REQUIRED.
6. BUILD TEMPORARY PEDESTRIAN IMPROVEMENTS ALONG WEST SIDE OF CERRILLOS ROAD AS REQUIRED TO MAINTAIN ACCESS DURING PHASE B.
7. INSTALL TEMPORARY SIGNALS TO SETUP FOR PHASE B.

PHASE B:

1. SHIFT TRAFFIC PER PLANS AND TYPICAL SECTIONS FOR PHASE B.
2. MAINTAIN PEDESTRIAN ACCESS ALONG THE WEST SIDE OF CERRILLOS ROAD.
3. BUILD EASTERN PORTION (NB LANES) OF CERRILLOS ROAD (B.O.P. TO E.O.P.) INCLUDING STORM DRAIN LATERALS, INLETS, CURB & GUTTER, SIDEWALK, DRIVEPADS AND SIGNAL AND LIGHTING EQUIPMENT. DO NOT BUILD CURB AND GUTTER BULB OUTS OR OUTSIDE CURB TRANSITION AREAS WHERE INDICATED ON THE PLANS.
4. RECONSTRUCT ST. MICHAEL'S DRIVE – SHIFT TRAFFIC AS NECESSARY TO COMPLETE THE WORK. DO NOT BUILD MEDIAN PAVEMENT AND CURB AND GUTTER ON ST. MICHAEL'S DRIVE UNTIL ALL CERRILLOS ROAD INTERSECTION PAVEMENT HAS BEEN COMPLETED TOWARD THE END OF THE PROJECT.
5. BUILD TEMPORARY PAVEMENT AS REQUIRED FOR PHASE C.
6. ADJUST TEMPORARY SIGNALS AS REQUIRED TO SETUP FOR PHASE C WORK.

PHASE C:

1. SHIFT TRAFFIC PER PLANS AND TYPICAL SECTIONS FOR PHASE C.
2. MAINTAIN PEDESTRIAN ACCESS ALONG THE EAST SIDE OF CERRILLOS ROAD.
3. BUILD WESTERN PORTION (SB LANES) OF CERRILLOS ROAD (B.O.P. TO E.O.P.) INCLUDING THE STORM DRAIN TRUNK LINE (B.O.P. TO ~STA. 165+00), INLETS, STORM DRAIN LATERALS, MANHOLES, CURB & GUTTER, SIDEWALK DRIVE PADS, AND SIGNAL & LIGHTING EQUIPMENT. DO NOT BUILD CURB AND GUTTER FOR BULB OUTS OR OUTSIDE CURB TRANSITION AREAS WHERE INDICATED ON THE PLANS. REFER TO SHEET 6-1, NOTE 15 FOR STORM DRAIN WORK RESTRICTIONS.
4. BUILD TEMPORARY PAVEMENT AS REQUIRED FOR PHASE D.
5. ADJUST TEMPORARY SIGNALS AS REQUIRED TO SETUP FOR PHASE D WORK.

PHASE D: (PHASE D-I THROUGH PHASE D-III)

1. COMPLETE MEDIAN WORK ALONG CERRILLOS ROAD.
2. SHIFT TRAFFIC DURING PHASE D-I TO D-III, AS REQUIRED TO COMPLETE STORM DRAIN (~STA. 165+00 TO E.O.P.) AND ROADWAY IMPROVEMENTS NEAR THE E.O.P. REFER TO SHEET 6-1, NOTE 15 FOR STORM DRAIN WORK RESTRICTIONS. BUILD NEW SAS MH (~STA. 167+07, 21' RT.) – SEE SHEET 6-24.
3. COMPLETE CURB AND GUTTER BULB OUTS AND TRANSITION AREAS ALONG THE OUTSIDE.
4. APPLY OGFC AND PERMANENT STRIPING ALONG CERRILLOS ROAD THROUGH ONE-LANE CLOSURES
5. INSTALL STREETSCAPING THROUGH ONE-LANE CLOSURES.

NOTE: SUBPHASES D-II AND D-III ARE FOR ADDITIONAL TRAFFIC SHIFTS REQUIRED FROM STA. 160+00 TO THE E.O.P. IN ORDER TO COMPLETE WORK NEAR THE CERRILLOS ROAD /ST. MICHAEL'S DRIVE INTERSECTION.

NOTE: HATCHED AREAS SHOWN ARE SCHEMATIC. SEE PLANS FOR DETAILS.

NO.	DESCRIPTION	DATE	BY
3			
2			
1			

REVISIONS (OR CHANGE NOTICES)

RODERICK C. ADAMS — NEW MEXICO — 14218 — REGISTERED PROFESSIONAL ENGINEER

SCALE HORZ. 1"=350'

DESIGNED BY: PB	DRAWN BY: PB	CHECKED BY: JB
DATE: 08/07/15	DATE: 08/07/15	DATE: 08/07/15

CITY OF SANTA FE

CERRILLOS ROAD PHASE IIC
CAMINO CARLOS REY TO
LLANO STREET
SANTA FE COUNTY

TRAFFIC CONTROL LAYOUT
AND SEQUENCING

J:\33693 Cerrillos Ph IIC\04 Engineering-33693\Plans\6_Sheets\6-4 sequence-layout.dwg Oct 06, 2015 – 8:23am Saved By: AdamsR

N.M. PROJECT NO. CN S100130 SHEET NO. 6-4

PARSONS BRINCKERHOFF

CITY OF SANTA FE	SHEET
NEW MEXICO PROJECT NO.	NO.
CN S100130	6–4A

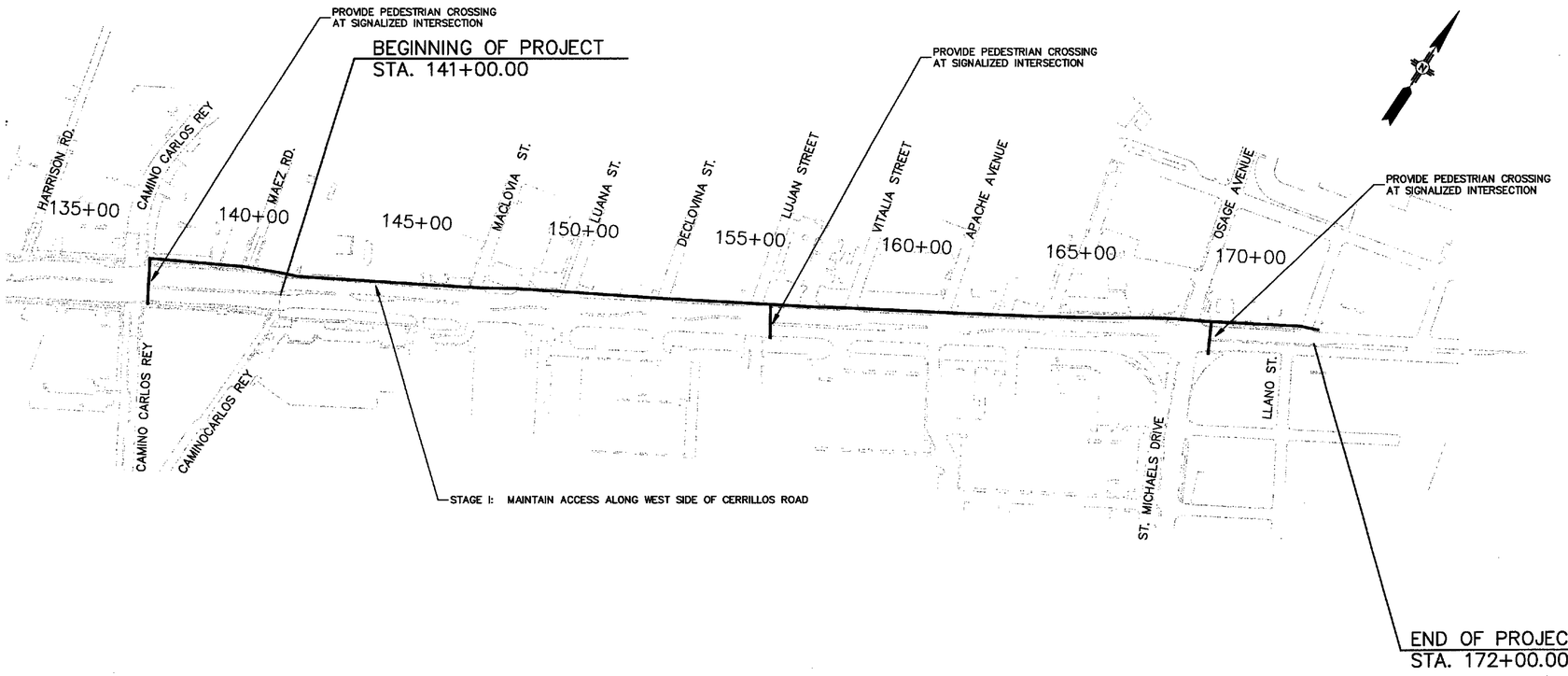

NOTES:

THE CONTRACTOR SHALL MAINTAIN PEDESTRIAN ACCESS THROUGH THE PROJECT DURING CONSTRUCTION. SEE SHEET 6–1, NOTE #14 FOR ADDITIONAL NOTES AND REQUIREMENTS REGARDING PEDESTRIAN ACCESS. SPECIAL ATTENTION IS MADE TO THE REQUIREMENT TO MEET PROWAG GUIDELINES (JULY, 1990).

PEDESTRIAN DETOUR PLAN:
THE PEDESTRIAN DETOUR PLAN SHOWN ABOVE IS SCHEMATIC. THE SUGGESTED PEDESTRIAN DETOUR PLAN FOR THE CORRIDOR IS AS FOLLOWS:

I. STAGE I (PHASE B): MAINTAIN ACCESS ALONG THE WEST SIDE OF CERRILLOS ROAD
MAINTAIN PEDESTRIAN ACCESS ALONG EXISTING AND TEMPORARY FACILITIES. TEMPORARY FACILITIES SHALL BE CONSTRUCTED AS REQUIRED TO MAINTAIN CONTINUOUS ACCESS ALONG THE ENTIRE PROJECT LENGTH. TEMPORARY SURFACE CONSTRUCTION SHALL BE FIRM AND UNYIELDING.

II. STAGE II (PHASE C & D): MAINTAIN ACCESS ALONG THE EAST SIDE OF CERRILLOS ROAD
MAINTAIN PEDESTRIAN ACCESS ALONG NEWLY CONSTRUCTED PROPOSED FACILITIES AND TEMPORARY FACILITIES. TEMPORARY FACILITIES SHALL BE CONSTRUCTED AS REQUIRED TO MAINTAIN CONTINUOUS ACCESS ALONG THE ENTIRE PROJECT LENGTH. TEMPORARY SURFACE CONSTRUCTION SHALL BE FIRM AND UNYIELDING.

CERRILLOS ROAD CROSSINGS:
THE CONTRACTOR SHALL PROVIDE A PEDESTRIAN CROSSING (CROSSWALK) OF CERRILLOS ROAD DURING CONSTRUCTION AT EACH OF THE FOLLOWING SIGNALIZED INTERSECTION LOCATIONS:
1. CAMINO CARLOS REY
2. LUJAN STREET
3. ST. MICHAEL'S DRIVE

TEMPORARY TRAFFIC SIGNALS SHALL ACCOMMODATE PEDESTRIAN MOVEMENTS AND SHALL MEET ADA REQUIREMENTS.

SIDE–STREET WORK:
MAINTAIN PEDESTRIAN ACCESS ALONG AT LEAST ONE SIDE OF THE ROAD AT ALL TIMES DURING CONSTRUCTION.

PEDESTRIAN DETOUR SIGNAGE:
THE CONTRACTOR SHALL PROVIDE AND MAINTAIN DETOUR SIGNAGE AS REQUIRED TO DIRECT PEDESTRIAN TRAFFIC SAFELY WITHIN THE PROJECT LIMITS.

RODERICK C. ADAMS — NEW MEXICO — 14218 — REGISTERED PROFESSIONAL ENGINEER — 10/6/15

NO.	DESCRIPTION	DATE	BY
3			
2			
1			

REVISIONS (OR CHANGE NOTICES)

CITY OF SANTA FE

CERRILLOS ROAD PHASE IIC
CAMINO CARLOS REY TO
LLANO STREET
SANTA FE COUNTY

PEDESTRIAN DETOUR PLAN
STAGE I (PHASE B)

SCALE
HORIZ. 1"=200'

DESIGNED BY: PB	DRAWN BY: PB	CHECKED BY: JB
DATE: 08/07/15	DATE: 08/07/15	DATE: 08/07/15

J:\33693 Cerrillos Ph IIC\04 Engineering–33693\Plans\6_Sheets\6–4a_Ped Detour Plan.dwg Oct 06, 2015 – 8:25am Saved By: AdamsR

N.M. PROJECT NO. CN S100130 SHEET NO. 6–4A

PARSONS BRINCKERHOFF

CITY OF SANTA FE	SHEET
NEW MEXICO PROJECT NO.	NO.
CN S100130	6-4B

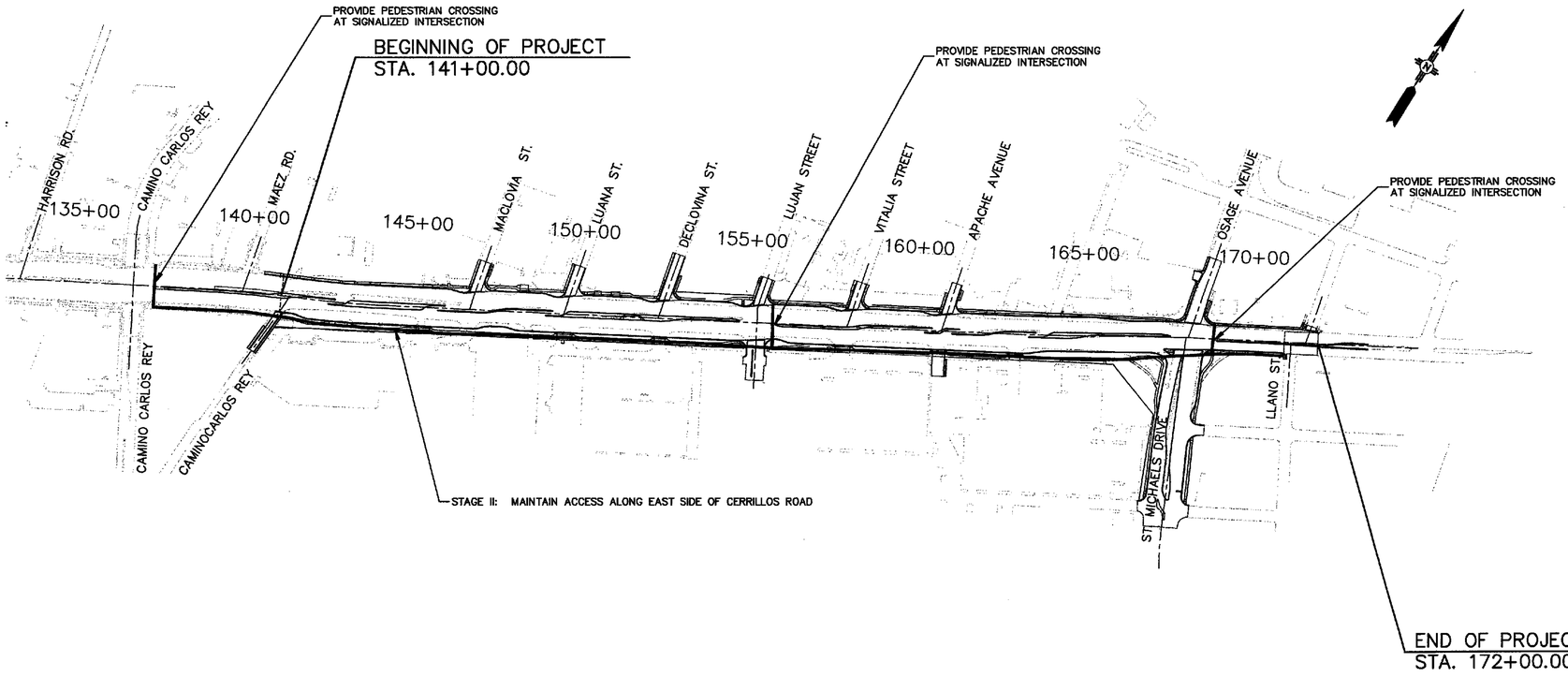

NOTES:

THE CONTRACTOR SHALL MAINTAIN PEDESTRIAN ACCESS THROUGH THE PROJECT DURING CONSTRUCTION. SEE SHEET 6-1, NOTE #14 FOR ADDITIONAL NOTES AND REQUIREMENTS REGARDING PEDESTRIAN ACCESS. SPECIAL ATTENTION IS MADE TO THE REQUIREMENT TO MEET PROWAG GUIDELINES (JULY, 1990).

PEDESTRIAN DETOUR PLAN:
THE PEDESTRIAN DETOUR PLAN SHOWN ABOVE IS SCHEMATIC. THE SUGGESTED PEDESTRIAN DETOUR PLAN FOR THE CORRIDOR IS AS FOLLOWS:

I. STAGE I (PHASE B): MAINTAIN ACCESS ALONG THE WEST SIDE OF CERRILLOS ROAD
MAINTAIN PEDESTRIAN ACCESS ALONG EXISTING AND TEMPORARY FACILITIES. TEMPORARY FACILITIES SHALL BE CONSTRUCTED AS REQUIRED TO MAINTAIN CONTINUOUS ACCESS ALONG THE ENTIRE PROJECT LENGTH. TEMPORARY SURFACE CONSTRUCTION SHALL BE FIRM AND UNYIELDING.

II. STAGE II (PHASE C & D): MAINTAIN ACCESS ALONG THE EAST SIDE OF CERRILLOS ROAD
MAINTAIN PEDESTRIAN ACCESS ALONG NEWLY CONSTRUCTED PROPOSED FACILITIES AND TEMPORARY FACILITIES. TEMPORARY FACILITIES SHALL BE CONSTRUCTED AS REQUIRED TO MAINTAIN CONTINUOUS ACCESS ALONG THE ENTIRE PROJECT LENGTH. TEMPORARY SURFACE CONSTRUCTION SHALL BE FIRM AND UNYIELDING.

CERILLOS ROAD CROSSINGS:
THE CONTRACTOR SHALL PROVIDE A PEDESTRIAN CROSSING (CROSSWALK) OF CERRILLOS ROAD DURING CONSTRUCTION AT EACH OF THE FOLLOWING SIGNALIZED INTERSECTION LOCATIONS:
1. CAMINO CARLOS REY
2. LUJAN STREET
3. ST. MICHAEL'S DRIVE

TEMPORARY TRAFFIC SIGNALS SHALL ACCOMMODATE PEDESTRIAN MOVEMENTS AND SHALL MEET ADA REQUIREMENTS.

SIDE-STREET WORK:
MAINTAIN PEDESTRIAN ACCESS ALONG AT LEAST ONE SIDE OF THE ROAD AT ALL TIMES DURING CONSTRUCTION.

PEDESTRIAN DETOUR SIGNAGE:
THE CONTRACTOR SHALL PROVIDE AND MAINTAIN DETOUR SIGNAGE AS REQUIRED TO DIRECT PEDESTRIAN TRAFFIC SAFELY WITHIN THE PROJECT LIMITS.

RODERICK C. ADAMS NEW MEXICO 14218 REGISTERED PROFESSIONAL ENGINEER 10/4/15

NO.	DESCRIPTION	DATE	BY
3			
2			
1			

REVISIONS (OR CHANGE NOTICES)

SCALE
HORIZ. 1"=200'

DESIGNED BY: PB	DRAWN BY: PB	CHECKED BY: JB
DATE: 08/07/15	DATE: 08/07/15	DATE: 08/07/15

CITY OF SANTA FE

CERRILLOS ROAD PHASE IIC
CAMINO CARLOS REY TO
LLANO STREET
SANTA FE COUNTY

PEDESTRIAN DETOUR PLAN
STAGE II (PHASE C & D)

J:\33693 Cerrillos Ph IIC\04 Engineering-33693\Plans\6_Sheets\6-4b_Ped Detour Plan.dwg Oct 06, 2015 - 8:26am Saved By: AdamsR

N.M. PROJECT NO. CN S100130 SHEET NO. 6-4B

PARSONS BRINCKERHOFF

CITY OF SANTA FE	SHEET
NEW MEXICO PROJECT NO.	NO.
CN S100130	6–5

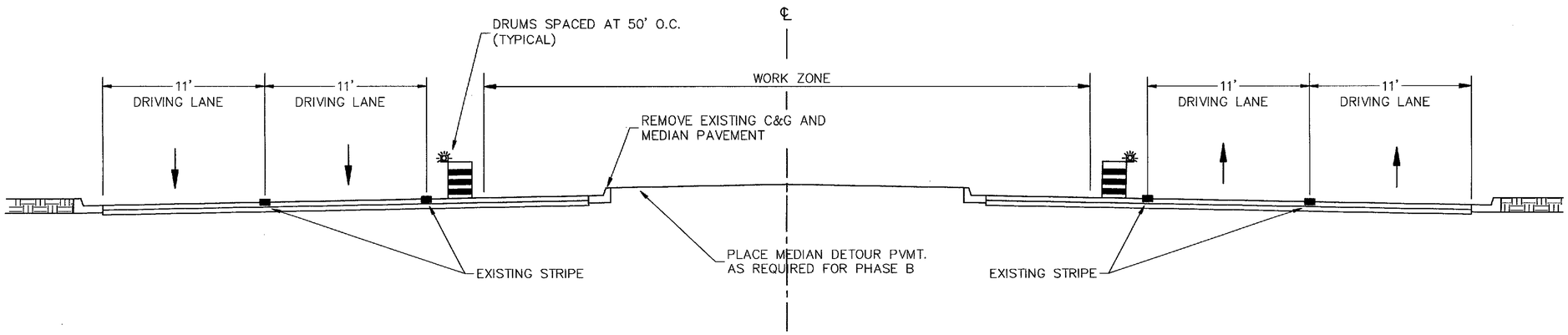

PHASE A TYPICAL SECTION

B.O.P. TO E.O.P.

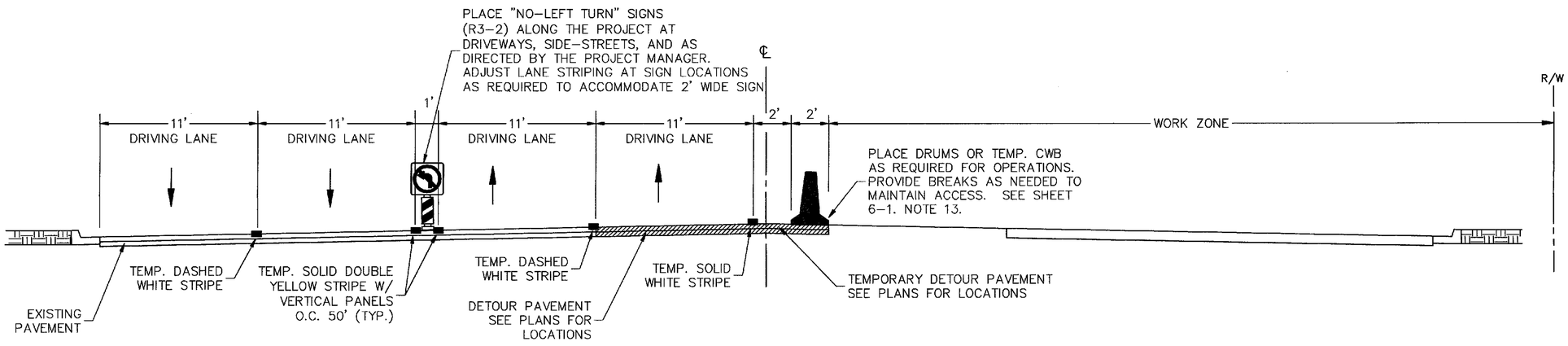

PHASE B TYPICAL SECTION

B.O.P. TO E.O.P.

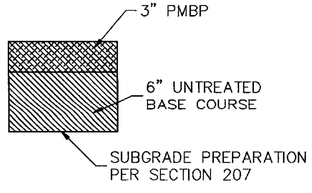

TEMPORARY PAVEMENT SECTION FOR DETOURS

N.T.S.

NOTE:
SEE PLANS FOR LOCATIONS WHICH REQUIRE ADDITIONAL PAVED WIDTH TO ACCCOMMODATE TURNING LANES

RODERICK C. ADAMS — NEW MEXICO — 14218 — REGISTERED PROFESSIONAL ENGINEER — 10/6/15

NO.	DESCRIPTION	DATE	BY
3			
2			
1			

REVISIONS (OR CHANGE NOTICES)

CITY OF SANTA FE

CERRILLOS ROAD PHASE IIC
CAMINO CARLOS REY TO
LLANO STREET
SANTA FE COUNTY

TRAFFIC CONTROL TYPICAL SECTIONS

SCALE
NOT TO SCALE

DESIGNED BY: PBCA	DRAWN BY: PB RCA	CHECKED BY: JBGKP
DATE: 08/22/15	DATE: 08/22/15	DATE: 08/22/15

J:\33693 Cerrillos Ph IIC\04 Engineering–33693\Plans\6_Sheets\6–5 to 6–6 Typical Sections.dwg Oct 06, 2015 – 8:28am Saved By: adamsr

N.M. PROJECT NO. CN S100130 SHEET NO. 6–5

PARSONS BRINCKERHOFF

CITY OF SANTA FE	SHEET
NEW MEXICO PROJECT NO.	NO.
CN S100130	6-6

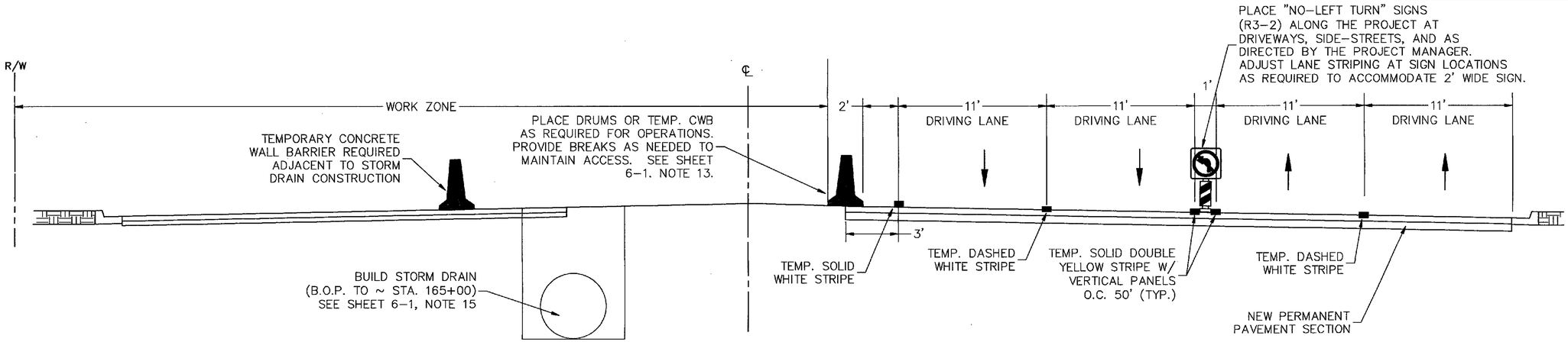

PHASE C TYPICAL SECTION

B.O.P. TO E.O.P.

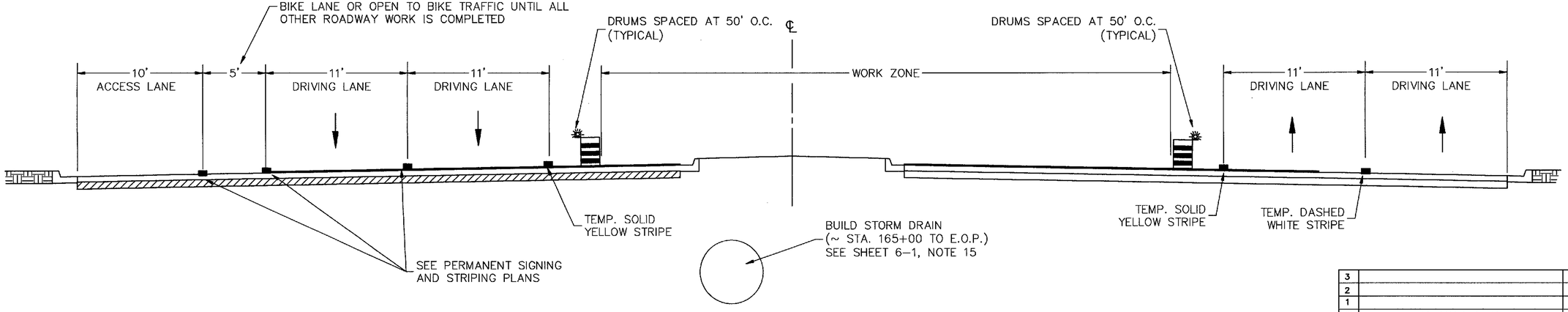

PHASE D TYPICAL SECTION

B.O.P. TO E.O.P.

SEE PHASE D-I THROUGH D-III PLANS FOR TRAFFIC SHIFTS REQUIRED TO CONSTRUCT THE STORM DRAIN AND ROADWAY SECTION NEAR THE END OF PROJECT

NOTE:
SEE PLANS FOR LOCATIONS WHICH REQUIRE ADDITIONAL PAVED WIDTH TO ACCCOMMODATE TURNING LANES

NO.	DESCRIPTION	DATE	BY
3			
2			
1			

REVISIONS (OR CHANGE NOTICES)

RODERICK C. ADAMS NEW MEXICO 14218 REGISTERED PROFESSIONAL ENGINEER 10/6/15

CITY OF SANTA FE

CERRILLOS ROAD PHASE IIC
CAMINO CARLOS REY TO
LLANO STREET
SANTA FE COUNTY

TRAFFIC CONTROL TYPICAL SECTIONS

SCALE
NOT TO SCALE

DESIGNED BY: PB	DRAWN BY: PB	CHECKED BY: JB
DATE: 08/07/15	DATE: 08/07/15	DATE: 08/07/15

J:\33693 Cerrillos Ph IIC\04 Engineering-33693\Plans\6_Sheets\6-5 to 6-6 Typical Sections.dwg Oct 06, 2015 - 8:29am Saved By: adamsr

N.M. PROJECT NO. CN S100130 SHEET NO. 6-6

PARSONS BRINCKERHOFF

CITY OF SANTA FE	SHEET
NEW MEXICO PROJECT NO.	NO.
CN S100130	6–7

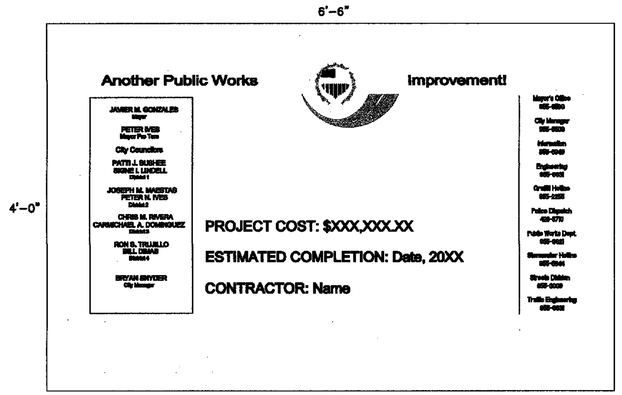

SP–1
(2 EACH)

DETAILS & LEGEND FOR SP–1 TO BE PROVIDED TO THE CONTRACTOR BY THE PROJECT MANAGER PRIOR TO SIGN FABRICATION. RETROREFLECTIVE SHEETING WILL NOT BE REQUIRED FOR PROJECT BOP SIGNS.

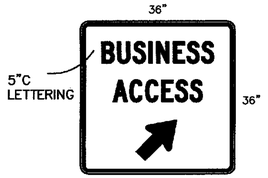

SP–2
W/BL

SP–3
W/BL

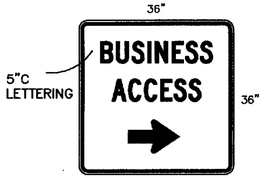

SP–4
W/BL

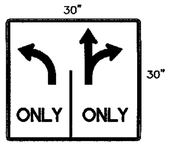

SP–5
B/W

SP–6
B/O

R1–1–30
W/R

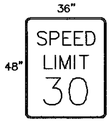

R2–1–36–30
B/W

R9–9–30
B/W

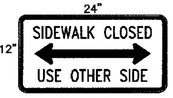

R9–10–24
B/W

R9–11–24
B/W

R9–11a–24
B/W

R3–2–24
B/R/W

R3–5L–30
B/W

R3–5R–30
B/W

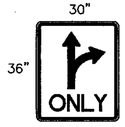

R3–6R–30
B/W

R3–7L–30
B/W

R3–7R–30
B/W

R4–7A–24R
B/W

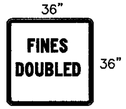

R2–6–36
B/W

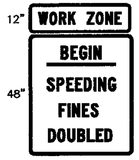

M25–NM–1–36
R52–NM–4–36
B/O
B/W

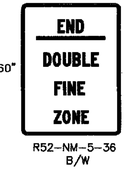

R52–NM–5–36
B/W

G20–2–36
B/O

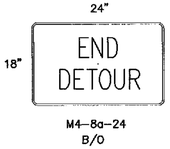

M4–8a–24
B/O

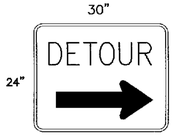

M4–9R–30
B/O

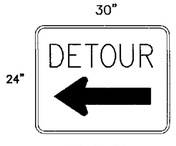

M4–9L–30
B/O

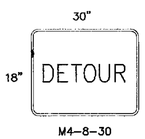

M4–8–30
B/O

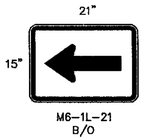

M6–1L–21
B/O

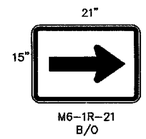

M6–1R–21
B/O

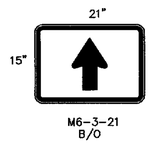

M6–3–21
B/O

W1–4bR–36
B/O

W1–4bL–36
B/O

W4–2R–36
B/O

W4–2L–36
B/O

W20–5R–36
B/O

W20–5L–36
B/O

REFER TO DRAWING 702–01–1/3 FOR ADDITIONAL STANDARD SIGN FACE DETAILS.

ROBERICK C. ADAMS
NEW MEXICO
14218
10/6/15
REGISTERED PROFESSIONAL ENGINEER

NO.	DESCRIPTION	DATE	BY
3			
2			
1			

REVISIONS (OR CHANGE NOTICES)

SCALE
NOT TO SCALE

DESIGNED BY: PB	DRAWN BY: PB	CHECKED BY: JB
DATE: 08/07/15	DATE: 08/07/15	DATE: 08/07/15

CITY OF SANTA FE

CERRILLOS ROAD PHASE IIC
CAMINO CARLOS REY TO
LLANO STREET
SANTA FE COUNTY

TRAFFIC CONTROL
SIGN FACE DETAILS

J:\33693 Cerrillos Ph IIC\04 Engineering–33693\Plans\6_Sheets\6–7 Face Details.dwg Oct 06, 2015 – 8:30am Saved By: millernz

N.M. PROJECT NO. CN S100130 SHEET NO. 6–7

PARSONS BRINCKERHOFF

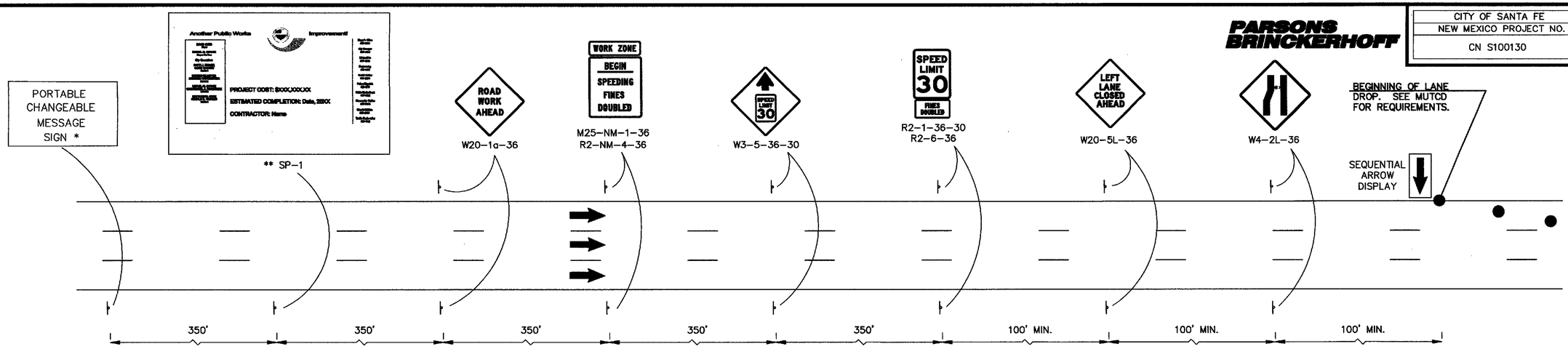

SIGNING FOR B.O.P. (EB CERRILLOS SHOWN – SIMILAR FOR WB CERRILLOS) N.T.S.

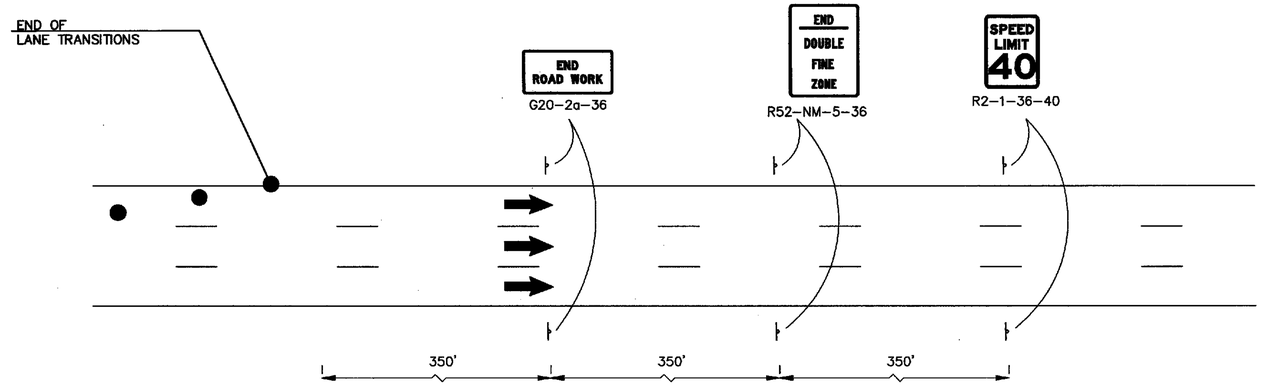

SIGNING FOR E.O.P. (WB CERRILLOS SHOWN – SIMILAR FOR EB CERRILLOS) N.T.S.

NOTES:

1. B.O.P. AND E.O.P SIGNS SHALL REMAIN IN PLACE THROUGH THE DURATION OF THE PROJECT OR AS DIRECTED BY THE PROJECT MANAGER.
2. EXCLUDING THE PCMS, SIGNS SHALL BE MOUNTED ON STEEL POST AND BASE POST BREAKAWAY SYSTEM.

* PORTABLE CHANGEABLE MESSAGE SIGN (PCMS): SIGN MUST BE INSTALLED AT LEAST TWO WEEKS PRIOR TO NOTICE TO PROCEED WITH A MESSAGE APPROVED BY THE PROJECT MANAGER.
** SEE SIGN FACE DETAILS (SHEET 6-7) FOR PROJECT SIGN REQUIREMENTS.
*** LEFT LANE CLOSURE SHOWN, SEE PLANS FOR RIGHT LANE CLOSURE, WHERE REQUIRED.

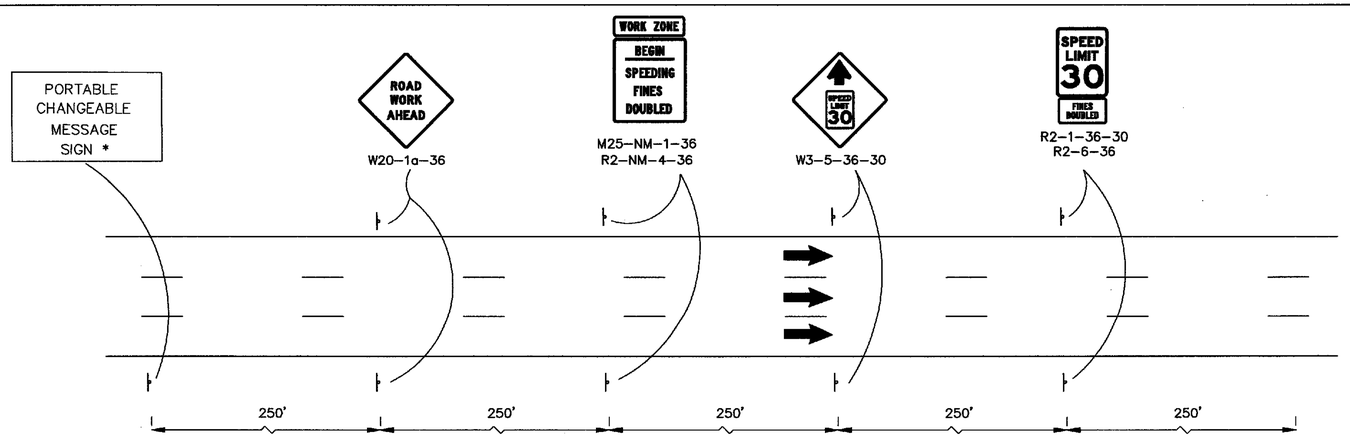

ADVANCED SIGNING FOR ST. MICHAEL'S DRIVE N.T.S.

NO.	DESCRIPTION	DATE	BY
3			
2			
1			

REVISIONS (OR CHANGE NOTICES)

RODERICK C. ADAMS NEW MEXICO 14218 REGISTERED PROFESSIONAL ENGINEER 10/6/15

SCALE
NOT TO SCALE

CITY OF SANTA FE

CERRILLOS ROAD PHASE IIC
CAMINO CARLOS REY TO
LLANO STREET
SANTA FE COUNTY

B.O.P. & E.O.P. SIGNING

DESIGNED BY: PB	DRAWN BY: PB	CHECKED BY: JB
DATE: 08/07/15	DATE: 08/07/15	DATE: 08/07/15

J:\33693 Cerrillos Ph IIC\04 Engineering-33693\Plans\6_Sheets\6-8 BOP-EOP.dwg Oct 06, 2015 - 8:32am Saved By: millernz

N.M. PROJECT NO. CN S100130 SHEET NO. 6-8

CITY OF SANTA FE	SHEET
NEW MEXICO PROJECT NO.	NO.
CN S100130	6-9

PARSONS BRINCKERHOFF

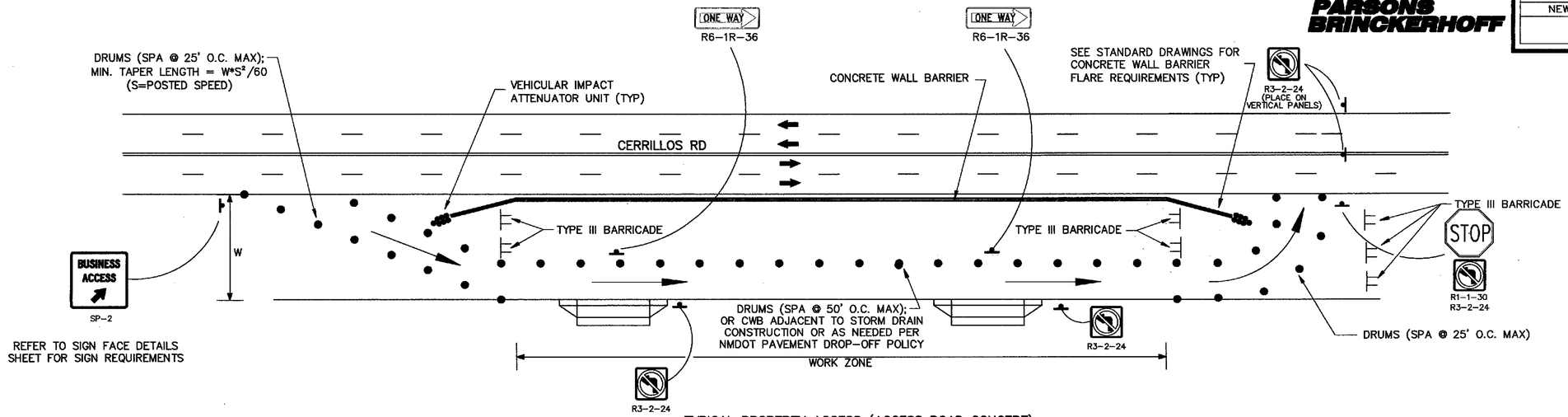

TYPICAL PROPERTY ACCESS (ACCESS ROAD CONCEPT)

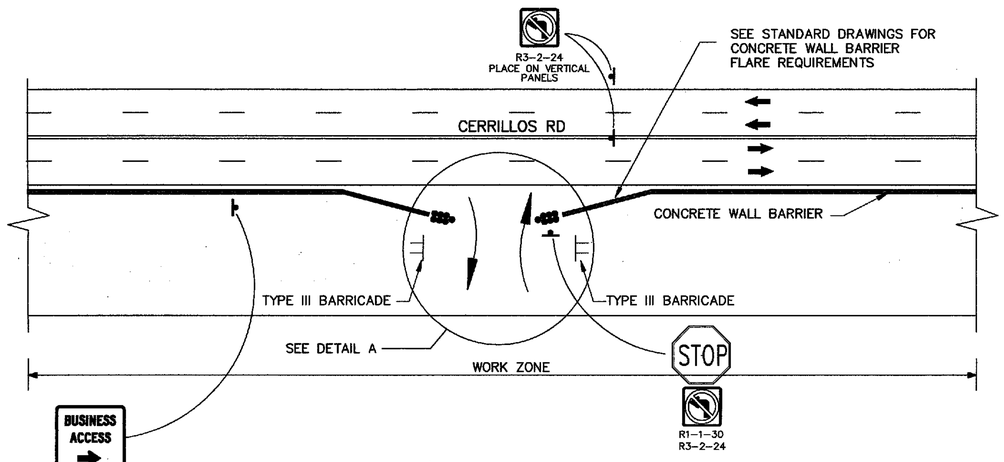

TYPICAL PROPERTY ACCESS (MID-WORK AREA)

RIGHT-IN / RIGHT-OUT

REFER TO SIGN FACE DETAILS
SHEET FOR SIGN REQUIREMENTS

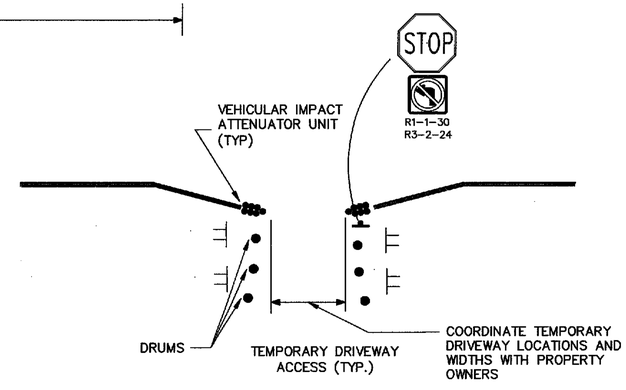

DETAIL A

NOTES:

1. TEMPORARY ACCESS ROADS OR DRIVEWAYS SHALL BE SURFACED WITH MILLINGS OR BASE COURSE. THIS WORK SHALL BE INCIDENTAL TO CONSTRUCTION AND NO SEPARATE MEASUREMENT OR PAYMENT WILL BE MADE.

2. THE CONTRACTOR SHALL ENSURE THAT ACCESS ROADS / POINTS ARE CONSTRUCTED WITHOUT DEPRESSED OR POORLY DRAINED AREAS THAT MAY COLLECT STORM WATER DURING INCLEMENT WEATHER. THIS MAY REQUIRE THE CONTRACTOR TO BUILD-UP SECTIONS AS NEEDED, OR AS DIRECTED BY THE PROJECT MANAGER. THIS WORK SHALL BE INCIDENTAL TO CONSTRUCTION.

3. SEE TRAFFIC CONTROL GENERAL NOTES #13 AND #17 FOR ADDITIONAL REQUIREMENTS.

NO.	DESCRIPTION	DATE	BY
3			
2			
1			

REVISIONS (OR CHANGE NOTICES)

RODERICK C. ADAMS
NEW MEXICO
14218
10/6/15
REGISTERED PROFESSIONAL ENGINEER

CITY OF SANTA FE

CERRILLOS ROAD PHASE IIC
CAMINO CARLOS REY TO
LLANO STREET
SANTA FE COUNTY

MAINTENANCE OF ACCESS
DETAILS

SCALE
NOT TO SCALE

DESIGNED BY: PB	DRAWN BY: PB	CHECKED BY: JB
DATE: 08/07/15	DATE: 08/07/15	DATE: 08/07/15

J:\33693 Cerrillos IIC\04 Engineering\33693 Plans\6 Sheets\6-9 ACCESS DETAILS.dwg 8/3/2015 4:18:12 AM MDT

N.M. PROJECT NO. CN S100130 SHEET NO. 6-9

PARSONS BRINCKERHOFF

CITY OF SANTA FE	SHEET
NEW MEXICO PROJECT NO.	NO.
CN S100130	6–10

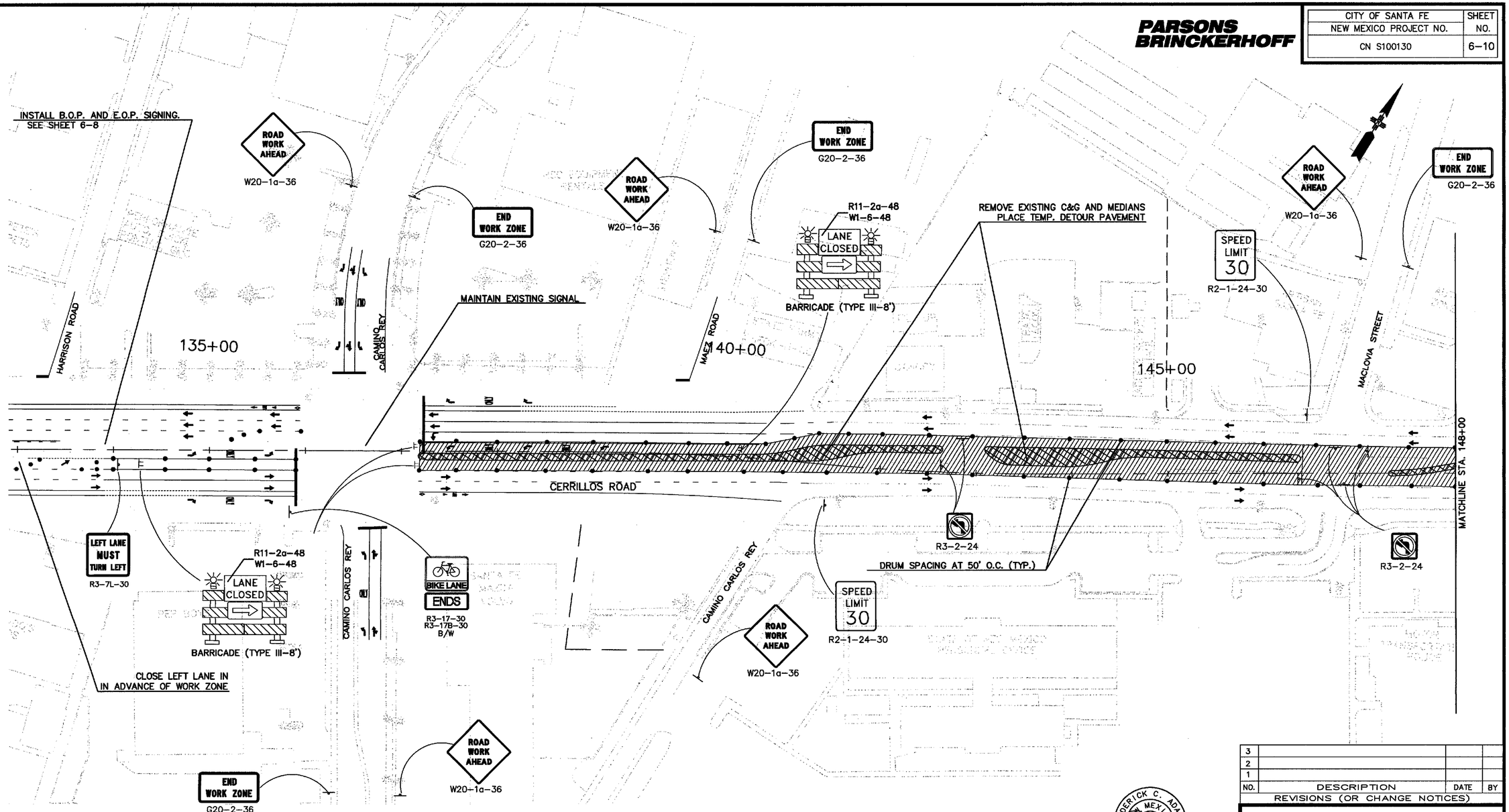

NOTES:

1. MAINTAIN B.O.P. & E.O.P. SIGNING
2. SEE SHEET 6–1, NOTE 15 FOR WORK RESTRICTIONS.
3. INSTALL TEMPORARY STRIPING FOR WORK PHASE
4. MAINTAIN PROPERTY ACCESS (SEE SHEET 6–1, NOTE 13)

STRIPING LEGEND:

1. TEMPORARY 4" SOLID WHITE
2. TEMPORARY 4" SOLID YELLOW
3. TEMPORARY 4" SOLID DOUBLE YELLOW
4. TEMPORARY 4" DASHED WHITE (10' STRIPE, 30' SKIP)
5. TEMPORARY 12" SOLID WHITE
6. TEMPORARY 24" SOLID WHITE
7. TEMPORARY PAVEMENT MARKING, LEFT ARROW
8. TEMPORARY PAVEMENT MARKING, RIGHT ARROW
9. TEMPORARY PAVEMENT MARKING, WORD "ONLY"

LEGEND

- WORK ZONE
- TEMPORARY PAVEMENT
- DRUMS

RODERICK C. ADAMS — NEW MEXICO — 14218 — REGISTERED PROFESSIONAL ENGINEER

NO.	DESCRIPTION	DATE	BY
3			
2			
1			

REVISIONS (OR CHANGE NOTICES)

SCALE 1"=50' HORIZ.

DESIGNED BY: PB	DRAWN BY: PB	CHECKED BY: JB
DATE: 08/07/15	DATE: 08/07/15	DATE: 08/07/15

CITY OF SANTA FE

CERRILLOS ROAD PHASE IIC
CAMINO CARLOS REY TO
LLANO STREET
SANTA FE COUNTY

TRAFFIC CONTROL
PHASE A

J:\33693 Cerrillos Ph IIC\04 Engineering–33693\Plans\6_Sheets\Phase A Sheets.dwg Oct 06, 2015 – 8:36am Saved By: AdamsR

N.M. PROJECT NO. CN S100130 SHEET NO. 6–10

PARSONS BRINCKERHOFF

CITY OF SANTA FE	SHEET
NEW MEXICO PROJECT NO.	NO.
CN S100130	6–11

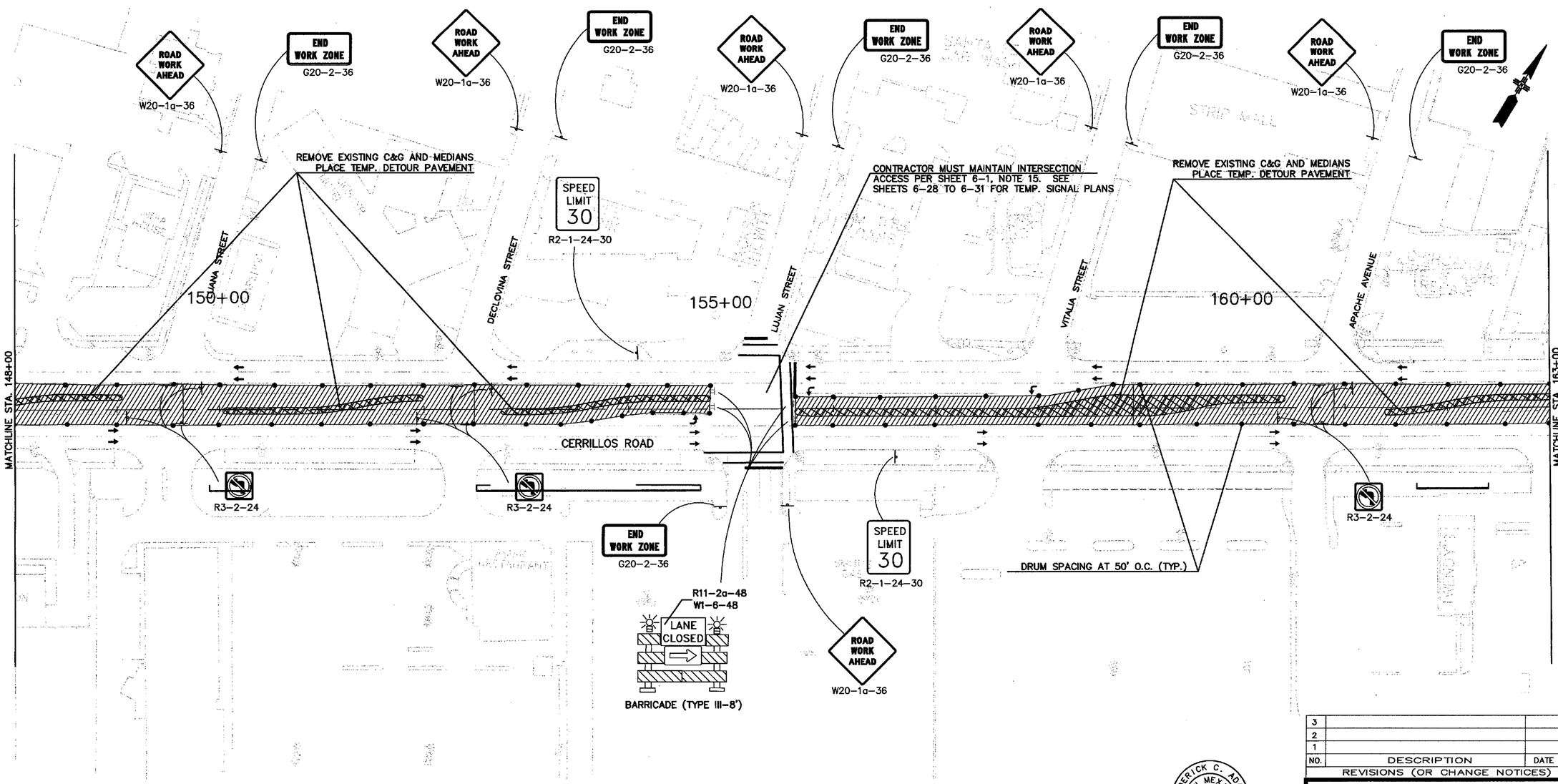

NOTES:

1. MAINTAIN B.O.P. & E.O.P. SIGNING
2. SEE SHEET 6–1, NOTE 15 FOR WORK RESTRICTIONS.
3. INSTALL TEMPORARY STRIPING FOR WORK PHASE
4. MAINTAIN PROPERTY ACCESS (SEE SHEET 6–1, NOTE 13)

STRIPING LEGEND:

1. TEMPORARY 4" SOLID WHITE
2. TEMPORARY 4" SOLID YELLOW
3. TEMPORARY 4" SOLID DOUBLE YELLOW
4. TEMPORARY 4" DASHED WHITE (10' STRIPE, 30' SKIP)
5. TEMPORARY 12" SOLID WHITE
6. TEMPORARY 24" SOLID WHITE
7. TEMPORARY PAVEMENT MARKING, LEFT ARROW
8. TEMPORARY PAVEMENT MARKING, RIGHT ARROW
9. TEMPORARY PAVEMENT MARKING, WORD "ONLY"

LEGEND

- WORK ZONE
- TEMPORARY PAVEMENT
- DRUMS

NO.	DESCRIPTION	DATE	BY
3			
2			
1			

REVISIONS (OR CHANGE NOTICES)

RODERICK C. ADAMS — NEW MEXICO — 14218 — REGISTERED PROFESSIONAL ENGINEER — 10/16/15

CITY OF SANTA FE

CERRILLOS ROAD PHASE IIC
CAMINO CARLOS REY TO
LLANO STREET
SANTA FE COUNTY

TRAFFIC CONTROL
PHASE A

SCALE 1"=50' HORIZ.

DESIGNED BY: PB	DRAWN BY: PB	CHECKED BY: JB
DATE: 08/07/15	DATE: 08/07/15	DATE: 08/07/15

J:\33693 Cerrillos Ph IIC\04 Engineering-33693\Plans\6_Sheets\Phase A Sheets.dwg Oct 06, 2015 – 8:37am Saved By: AdamsR

N.M. PROJECT NO. CN S100130 SHEET NO. 6–11

PARSONS BRINCKERHOFF

CITY OF SANTA FE	SHEET
NEW MEXICO PROJECT NO.	NO.
CN S100130	6–12

ROAD WORK AHEAD W20–1a–36

END WORK ZONE G20–2–36

REMOVE EXISTING C&G AND MEDIANS PLACE TEMP. DETOUR PAVEMENT

SPEED LIMIT 30 R2–1–24–30

CONTRACTOR MUST MAINTAIN INTERSECTION ACCESS PER SHEET 6–1, NOTE 15. SEE SHEETS 6–28 TO 6–31 FOR TEMP. SIGNAL PLANS

INSTALL B.O.P. AND E.O.P. SIGNING. SEE SHEET 6–8

W1–4bR–36

~ STA. 173+50

165+00

170+00

175+00

OSAGE AVENUE

CHAMA AVENUE

MATCHLINE STA. 163+00

CERRILLOS ROAD

R3–2–24

W1–4bL–36

DRUM SPACING AT 50' O.C. (TYP.)

ST. MICHAELS DRIVE

LLANO STREET

R11–2a–48

W1–6–48

LANE CLOSED

BARRICADE (TYPE III–8')

CHAMISA STREET

INSTALL ST. MICHAEL'S DRIVE ADVANCED SIGNING (SEE SHEET 6–8)

NOTES:

1. MAINTAIN B.O.P. & E.O.P. SIGNING
2. SEE SHEET 6–1, NOTE 15 FOR WORK RESTRICTIONS.
3. INSTALL TEMPORARY STRIPING FOR WORK PHASE
4. MAINTAIN PROPERTY ACCESS (SEE SHEET 6–1, NOTE 13)

STRIPING LEGEND:

1. TEMPORARY 4" SOLID WHITE
2. TEMPORARY 4" SOLID YELLOW
3. TEMPORARY 4" SOLID DOUBLE YELLOW
4. TEMPORARY 4" DASHED WHITE (10' STRIPE, 30' SKIP)
5. TEMPORARY 12" SOLID WHITE
6. TEMPORARY 24" SOLID WHITE
7. TEMPORARY PAVEMENT MARKING, LEFT ARROW
8. TEMPORARY PAVEMENT MARKING, RIGHT ARROW
9. TEMPORARY PAVEMENT MARKING, WORD "ONLY"

LEGEND

WORK ZONE

TEMPORARY PAVEMENT

DRUMS

NO.	DESCRIPTION	DATE	BY
3			
2			
1			

REVISIONS (OR CHANGE NOTICES)

RODERICK C. ADAMS NEW MEXICO 14218 REGISTERED PROFESSIONAL ENGINEER

CITY OF SANTA FE

CERRILLOS ROAD PHASE IIC
CAMINO CARLOS REY TO
LLANO STREET
SANTA FE COUNTY

TRAFFIC CONTROL
PHASE A

SCALE 1"=50' HORIZ.

DESIGNED BY: PB	DRAWN BY: PB	CHECKED BY: JB
DATE: 08/07/15	DATE: 08/07/15	DATE: 08/07/15

J:\33693 Cerrillos Ph IIC\04 Engineering–33693\Plans\6_Sheets\Phase A Sheets.dwg Oct 06, 2015 – 8:38am Saved By: AdamsR

N.M. PROJECT NO. CN S100130 SHEET NO. 6–12

PARSONS BRINCKERHOFF

CITY OF SANTA FE	SHEET
NEW MEXICO PROJECT NO.	NO.
CN S100130	6–13

INSTALL B.O.P. AND E.O.P. SIGNING.
SEE SHEET 6–8

ROAD WORK AHEAD
W20–1a–36

END WORK ZONE
G20–2–36

ROAD WORK AHEAD
W20–1a–36

END WORK ZONE
G20–2–36

ROAD WORK AHEAD
W20–1a–36

END WORK ZONE
G20–2–36

KEEP RIGHT
R4–7A–24R

MAINTAIN EXISTING SIGNAL

HARRISON ROAD

CAMINO CARLOS REY

135+00

MAES ROAD

140+00

R11–2–48
ROAD CLOSED
BARRICADE (TYPE III–8')

145+00

SPEED LIMIT 30
R2–1–24–30

MACILOVIA STREET

R3–2–24

CERRILLOS ROAD

MATCHLINE STA. 148+00

R11–2a–48
W1–6–48
LANE CLOSED
BARRICADE (TYPE III–8')

CLOSE RIGHT LANE
IN ADVANCE OF WORK ZONE

CAMINO CARLOS REY

OLD

W1–4bL–36

SIDEWALK CLOSED AHEAD
CROSS HERE
R9–11(L)–24

STA. 138+50
BEGIN 28' LATERAL SHIFT

BIKE LANE
ENDS
R3–17–30
R3–17B–30
B/W

R3–2–24

CAMINO CARLOS REY

ROAD WORK AHEAD
W20–1a–36

BUILD STORM DRAIN
LATERALS (TYPICAL)

STA. 141+50
END 28' LATERAL SHIFT

SPEED LIMIT 30
R2–1–24–30

SIDEWALK CLOSED
R9–9–24

CONTRACTOR SHALL
MAINTAIN PROPERTY ACCESS
DURING CONSTRUCTION.
SEE SHEET 6–1, NOTE 13.

SIDEWALK CLOSED
USE OTHER SIDE
R9–10–24

SIDEWALK CLOSED
R9–9–24

NOTE: BULB OUT TO BE
CONSTRUCTED AT THE END
OF PHASE D. CONSTRUCT
DETOUR PAVEMENT AND
TEMPORARY PEDESTRIAN
ACCESS FOR PHASES C & D.

END WORK ZONE
G20–2–36

ROAD WORK AHEAD
W20–1a–36

NOTES:

1. MAINTAIN B.O.P. & E.O.P. SIGNING
2. SEE SHEET 6–1, NOTE 15 FOR WORK RESTRICTIONS.
3. INSTALL TEMPORARY STRIPING FOR WORK PHASE
4. MAINTAIN PROPERTY ACCESS (SEE SHEET 6–1, NOTE 13)

STRIPING LEGEND:

① TEMPORARY 4" SOLID WHITE
② TEMPORARY 4" SOLID YELLOW
③ TEMPORARY 4" SOLID DOUBLE YELLOW
④ TEMPORARY 4" DASHED WHITE (10' STRIPE, 30' SKIP)
⑤ TEMPORARY 12" SOLID WHITE
⑥ TEMPORARY 24" SOLID WHITE
⑦ TEMPORARY PAVEMENT MARKING, LEFT ARROW
⑧ TEMPORARY PAVEMENT MARKING, RIGHT ARROW
⑨ TEMPORARY PAVEMENT MARKING, WORD "ONLY"

LEGEND

WORK ZONE

TEMPORARY PAVEMENT

DRUMS

RODERICK C. ADAMS
NEW MEXICO
14218
REGISTERED PROFESSIONAL ENGINEER

NO.	DESCRIPTION	DATE	BY
3			
2			
1			

REVISIONS (OR CHANGE NOTICES)

CITY OF SANTA FE

CERRILLOS ROAD PHASE IIC
CAMINO CARLOS REY TO
LLANO STREET
SANTA FE COUNTY

TRAFFIC CONTROL
PHASE B

SCALE
1"=50' HORIZ.

DESIGNED BY: PB	DRAWN BY: PB	CHECKED BY: JB
DATE: 08/07/15	DATE: 08/07/15	DATE: 08/07/15

J:\33693 Cerrillos Ph IIC\04 Engineering-33693\Plans\6_Sheets\Phase B Sheets.dwg Oct 06, 2015 - 8:45am Saved By: AdamsR

N.M. PROJECT NO. CN S100130 SHEET NO. 6–13

PARSONS BRINCKERHOFF

CITY OF SANTA FE	SHEET
NEW MEXICO PROJECT NO.	NO.
CN S100130	6–14

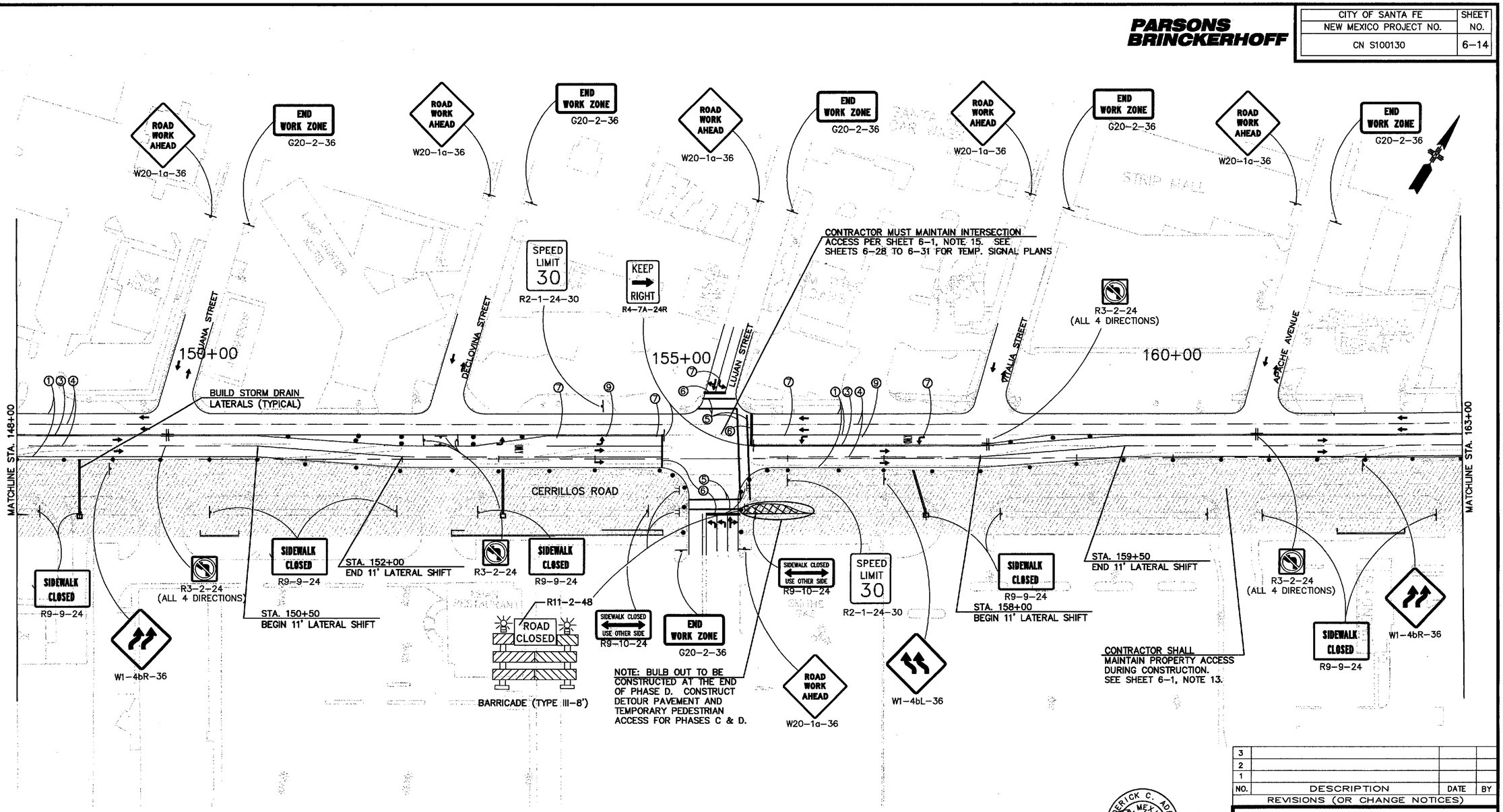

NOTES:

1. MAINTAIN B.O.P. & E.O.P. SIGNING
2. SEE SHEET 6–1, NOTE 15 FOR WORK RESTRICTIONS.
3. INSTALL TEMPORARY STRIPING FOR WORK PHASE
4. MAINTAIN PROPERTY ACCESS (SEE SHEET 6–1, NOTE 13)

STRIPING LEGEND:

① TEMPORARY 4" SOLID WHITE
② TEMPORARY 4" SOLID YELLOW
③ TEMPORARY 4" SOLID DOUBLE YELLOW
④ TEMPORARY 4" DASHED WHITE (10' STRIPE, 30' SKIP)
⑤ TEMPORARY 12" SOLID WHITE
⑥ TEMPORARY 24" SOLID WHITE
⑦ TEMPORARY PAVEMENT MARKING, LEFT ARROW
⑧ TEMPORARY PAVEMENT MARKING, RIGHT ARROW
⑨ TEMPORARY PAVEMENT MARKING, WORD "ONLY"

LEGEND

WORK ZONE

TEMPORARY PAVEMENT

DRUMS

NO.	DESCRIPTION	DATE	BY
3			
2			
1			

REVISIONS (OR CHANGE NOTICES)

RODERICK C. ADAMS NEW MEXICO 14218 REGISTERED PROFESSIONAL ENGINEER 10/6/15

SCALE 1"=50' HORIZ.

DESIGNED BY: PB	DRAWN BY: PB	CHECKED BY: JB
DATE: 08/07/15	DATE: 08/07/15	DATE: 08/07/15

CITY OF SANTA FE

CERRILLOS ROAD PHASE IIC
CAMINO CARLOS REY TO
LLANO STREET
SANTA FE COUNTY

TRAFFIC CONTROL
PHASE B

J:\33693 Cerrillos Ph IIC\04 Engineering–33693\Plans\6_Sheets\Phase B Sheets.dwg Oct 06, 2015 – 8:45am Saved By: AdamsR

N.M. PROJECT NO. CN S100130 SHEET NO. 6–14

PARSONS BRINCKERHOFF

CITY OF SANTA FE	SHEET
NEW MEXICO PROJECT NO.	NO.
CN S100130	6–15

ROAD WORK AHEAD W20–1a–36

END WORK ZONE G20–2–36

ROAD WORK AHEAD W20–1a–36

END WORK ZONE G20–2–36

ROAD WORK AHEAD W20–1a–36

END WORK ZONE G20–2–36

ROAD WORK AHEAD W20–1a–36

END WORK ZONE G20–2–36

INSTALL B.O.P. AND E.O.P. SIGNING. SEE SHEET 6–8

CONTRACTOR MUST MAINTAIN INTERSECTION ACCESS PER SHEET 6–1, NOTE 15. SEE SHEETS 6–28 TO 6–31 FOR TEMP. SIGNAL PLANS

SPEED LIMIT 30 R2–1–24–30

KEEP RIGHT R4–7A–24R

STA. 172+25 BEGIN 7' LATERAL SHIFT

W1–4bR–36

STA. 173+00 END 7' LATERAL SHIFT

165+00

170+00

175+00

OSAGE AVENUE

CHAMA AVENUE

BUILD STORM DRAIN LATERALS (TYPICAL)

CERRILLOS ROAD

MATCHLINE STA. 163+00

ADVENTURE DENTAL

R3–2–24

STA.164+50 END 11' LATERAL SHIFT

CONTRACTOR SHALL MAINTAIN PROPERTY ACCESS DURING CONSTRUCTION. SEE SHEET 6–1, NOTE 13.

STA. 163+00 BEGIN 11' LATERAL SHIFT

RIGHT LANE MUST TURN RIGHT R3–7R–30

ST. MICHAELS DRIVE

ONE WAY

SIDEWALK CLOSED R9–9–24

LLANO STREET

SIDEWALK CLOSED USE OTHER SIDE R9–10–24

W1–4bR–36

R3–2–24

STA. 171+50 BEGIN 11' LATERAL SHIFT

END WORK ZONE G20–2–36

STA. 173+00 END 11' LATERAL SHIFT

END ROAD WORK G20–2a–36

R11–2–48

ROAD CLOSED

BARRICADE (TYPE III–8')

R11–2a–48 W1–6–48

LANE CLOSED

BARRICADE (TYPE III–8')

END WORK ZONE G20–2–36

SIDEWALK CLOSED R9–9–24

* NOTE: CONTRACTOR SHALL MAINTAIN ACCESS ON ONE SIDE OF ST. MICHAEL'S AT ALL TIMES

CHAMISA STREET

ROAD WORK AHEAD W20–1a–36

RECONSTRUCT ST. MICHAEL'S DRIVE SHIFT TRAFFIC AS REQUIRED TO MAINTAIN TRAFFIC. DO NOT INSTALL MEDIAN PAVEMENT AND C&G UNTIL CERRILLOS ROAD INTERSECTION WORK HAS BEEN COMPLETED TOWARD THE END OF THE PROJECT.

ROAD WORK AHEAD W20–1a–36

INSTALL ST. MICHAEL'S DRIVE ADVANCED SIGNING (SEE SHEET 6–8)

NOTES:

1. MAINTAIN B.O.P. & E.O.P. SIGNING
2. SEE SHEET 6–1, NOTE 15 FOR WORK RESTRICTIONS.
3. INSTALL TEMPORARY STRIPING FOR WORK PHASE
4. MAINTAIN PROPERTY ACCESS (SEE SHEET 6–1, NOTE 13)

STRIPING LEGEND:

① TEMPORARY 4" SOLID WHITE
② TEMPORARY 4" SOLID YELLOW
③ TEMPORARY 4" SOLID DOUBLE YELLOW
④ TEMPORARY 4" DASHED WHITE (10' STRIPE, 30' SKIP)
⑤ TEMPORARY 12" SOLID WHITE
⑥ TEMPORARY 24" SOLID WHITE
⑦ TEMPORARY PAVEMENT MARKING, LEFT ARROW
⑧ TEMPORARY PAVEMENT MARKING, RIGHT ARROW
⑨ TEMPORARY PAVEMENT MARKING, WORD "ONLY"

LEGEND

WORK ZONE

TEMPORARY PAVEMENT

DRUMS

NO.	DESCRIPTION	DATE	BY
3			
2			
1			

REVISIONS (OR CHANGE NOTICES)

RODERICK C. ADAMS NEW MEXICO 14218 REGISTERED PROFESSIONAL ENGINEER 10/7/15

CITY OF SANTA FE

CERRILLOS ROAD PHASE IIC
CAMINO CARLOS REY TO
LLANO STREET
SANTA FE COUNTY

TRAFFIC CONTROL
PHASE B

SCALE 1"=50' HORIZ.

DESIGNED BY: PB	DRAWN BY: PB	CHECKED BY: JB
DATE: 08/07/15	DATE: 08/07/15	DATE: 08/07/15

J:\33693 Cerrillos Ph IIC\04 Engineering–33693\Plans\6_Sheets\Phase B Sheets.dwg Oct 06, 2015 – 8:46am Saved By: AdamsR

N.M. PROJECT NO. CN S100130 SHEET NO. 6–15

PARSONS BRINCKERHOFF

CITY OF SANTA FE	SHEET
NEW MEXICO PROJECT NO.	NO.
CN S100130	6–16

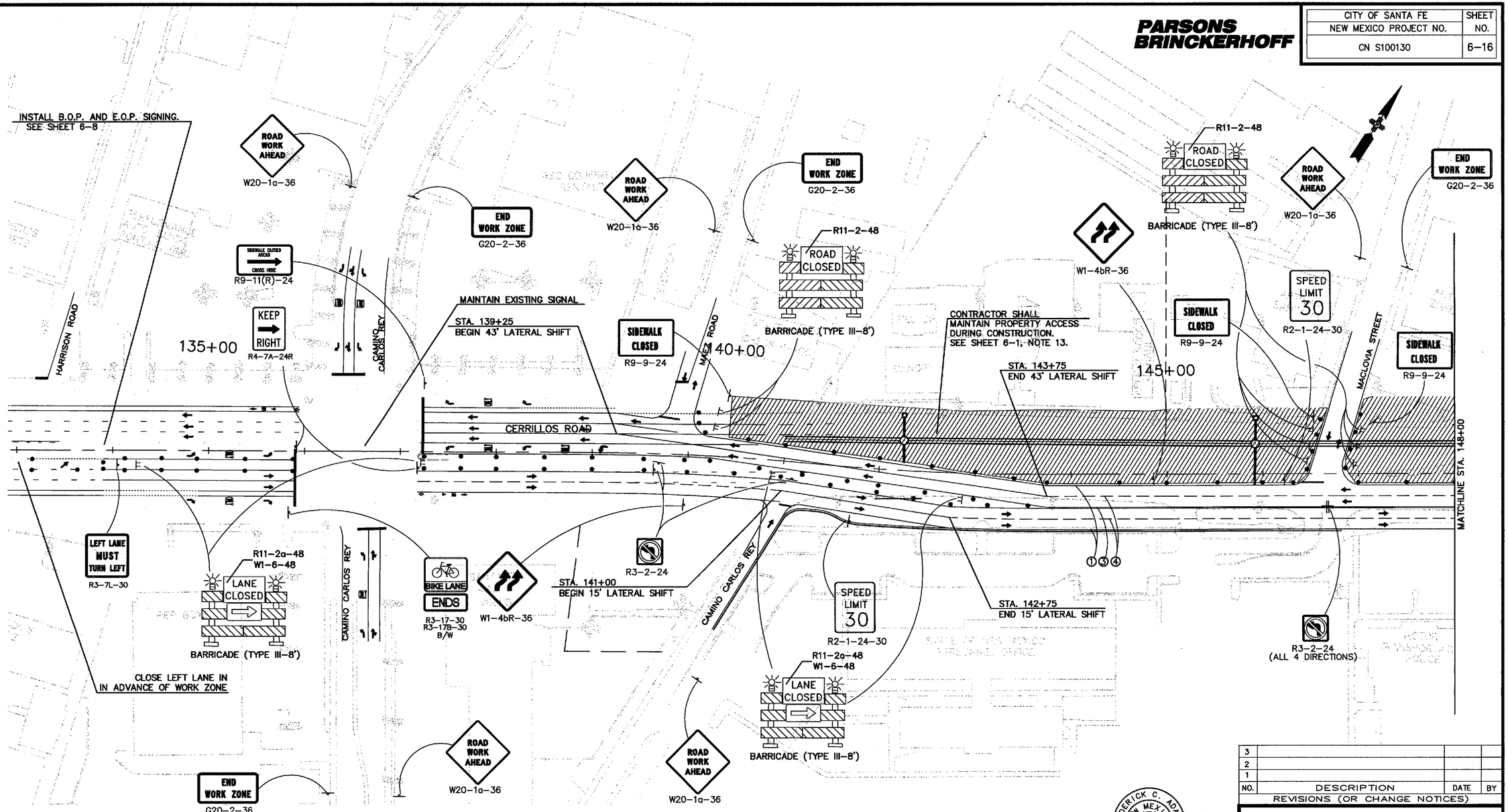

NOTES:

1. MAINTAIN B.O.P. & E.O.P. SIGNING
2. SEE SHEET 6–1, NOTE 15 FOR WORK RESTRICTIONS.
3. INSTALL TEMPORARY STRIPING FOR WORK PHASE
4. MAINTAIN PROPERTY ACCESS (SEE SHEET 6–1, NOTE 13)

STRIPING LEGEND:

1. TEMPORARY 4" SOLID WHITE
2. TEMPORARY 4" SOLID YELLOW
3. TEMPORARY 4" SOLID DOUBLE YELLOW
4. TEMPORARY 4" DASHED WHITE (10' STRIPE, 30' SKIP)
5. TEMPORARY 12" SOLID WHITE
6. TEMPORARY 24" SOLID WHITE
7. TEMPORARY PAVEMENT MARKING, LEFT ARROW
8. TEMPORARY PAVEMENT MARKING, RIGHT ARROW
9. TEMPORARY PAVEMENT MARKING, WORD "ONLY"

LEGEND

- WORK ZONE
- TEMPORARY PAVEMENT
- DRUMS

NO.	DESCRIPTION	DATE	BY
3			
2			
1			

REVISIONS (OR CHANGE NOTICES)

RODERICK C. ADAMS — NEW MEXICO — 14218 — REGISTERED PROFESSIONAL ENGINEER — 10/7/15

CITY OF SANTA FE

CERRILLOS ROAD PHASE IIC
CAMINO CARLOS REY TO
LLANO STREET
SANTA FE COUNTY

TRAFFIC CONTROL
PHASE C

SCALE 1"=50' HORIZ.

DESIGNED BY: PB	DRAWN BY: PB	CHECKED BY: JB
DATE: 08/07/15	DATE: 08/07/15	DATE: 08/07/15

PARSONS BRINCKERHOFF

CITY OF SANTA FE	SHEET
NEW MEXICO PROJECT NO.	NO.
CN S100130	6–17

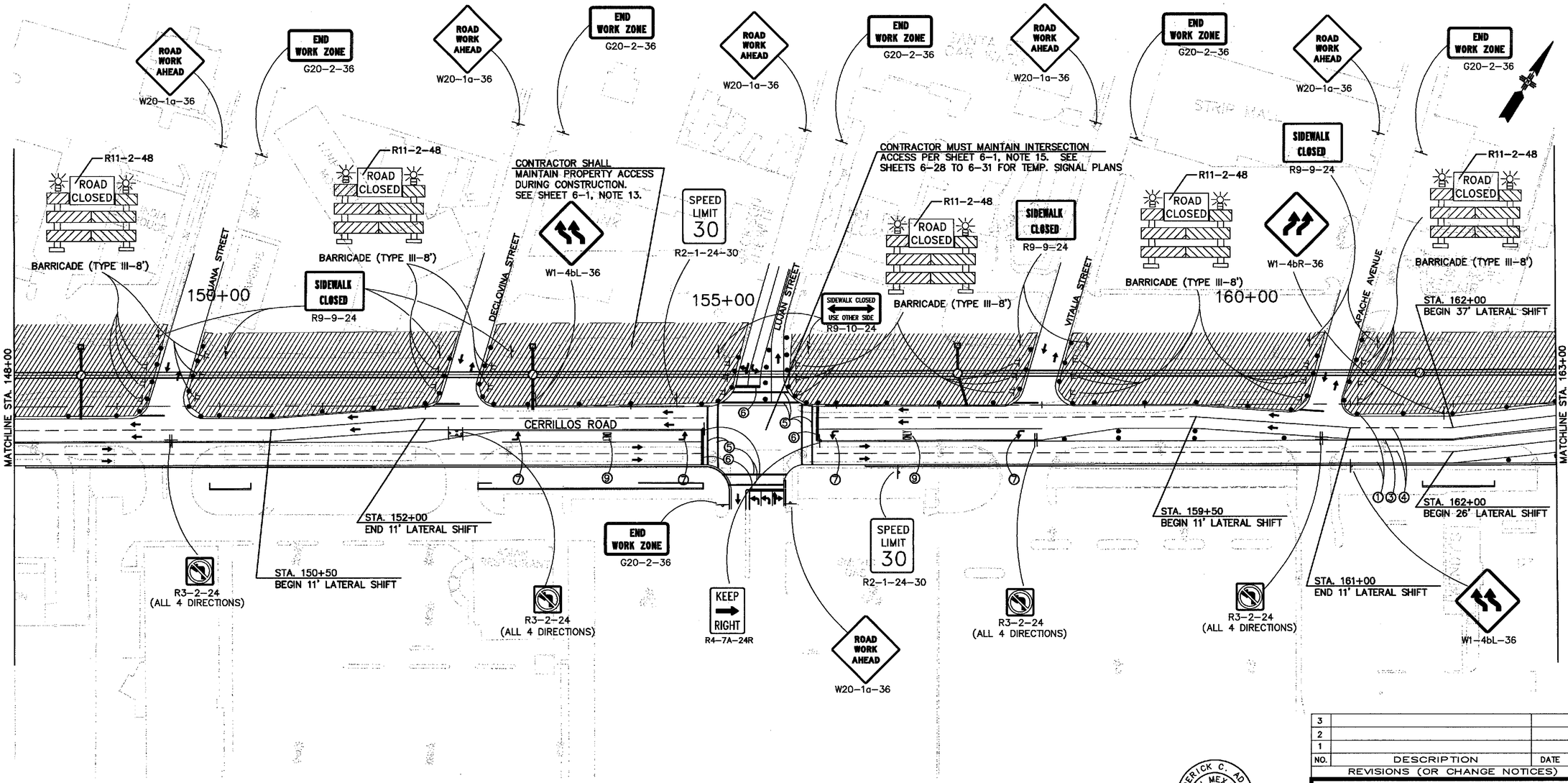

NO.	DESCRIPTION	DATE	BY
3			
2			
1			

REVISIONS (OR CHANGE NOTICES)

RODERICK C. ADAMS NEW MEXICO 14218 REGISTERED PROFESSIONAL ENGINEER 10/7/15

NOTES:

1. MAINTAIN B.O.P. & E.O.P. SIGNING
2. SEE SHEET 6–1, NOTE 15 FOR WORK RESTRICTIONS.
3. INSTALL TEMPORARY STRIPING FOR WORK PHASE
4. MAINTAIN PROPERTY ACCESS (SEE SHEET 6–1, NOTE 13)

STRIPING LEGEND:

1. TEMPORARY 4" SOLID WHITE
2. TEMPORARY 4" SOLID YELLOW
3. TEMPORARY 4" SOLID DOUBLE YELLOW
4. TEMPORARY 4" DASHED WHITE (10' STRIPE, 30' SKIP)
5. TEMPORARY 12" SOLID WHITE
6. TEMPORARY 24" SOLID WHITE
7. TEMPORARY PAVEMENT MARKING, LEFT ARROW
8. TEMPORARY PAVEMENT MARKING, RIGHT ARROW
9. TEMPORARY PAVEMENT MARKING, WORD "ONLY"

LEGEND

- WORK ZONE
- TEMPORARY PAVEMENT
- DRUMS

DESIGNED BY: PB	DRAWN BY: PB	CHECKED BY: JB
DATE: 08/07/15	DATE: 08/07/15	DATE: 08/07/15

SCALE 1"=50' HORIZ.

CITY OF SANTA FE

CERRILLOS ROAD PHASE IIC
CAMINO CARLOS REY TO
LLANO STREET
SANTA FE COUNTY

TRAFFIC CONTROL
PHASE C

J:\33693 Cerrillos Ph IIC\04 Engineering–33693\Plans\6_Sheets\Phase C Sheets.dwg Oct 06, 2015 – 8:50am Saved By: AdamsR

N.M. PROJECT NO. CN S100130 SHEET NO. 6–17

PARSONS BRINCKERHOFF

CITY OF SANTA FE	SHEET
NEW MEXICO PROJECT NO.	NO.
CN S100130	6–18

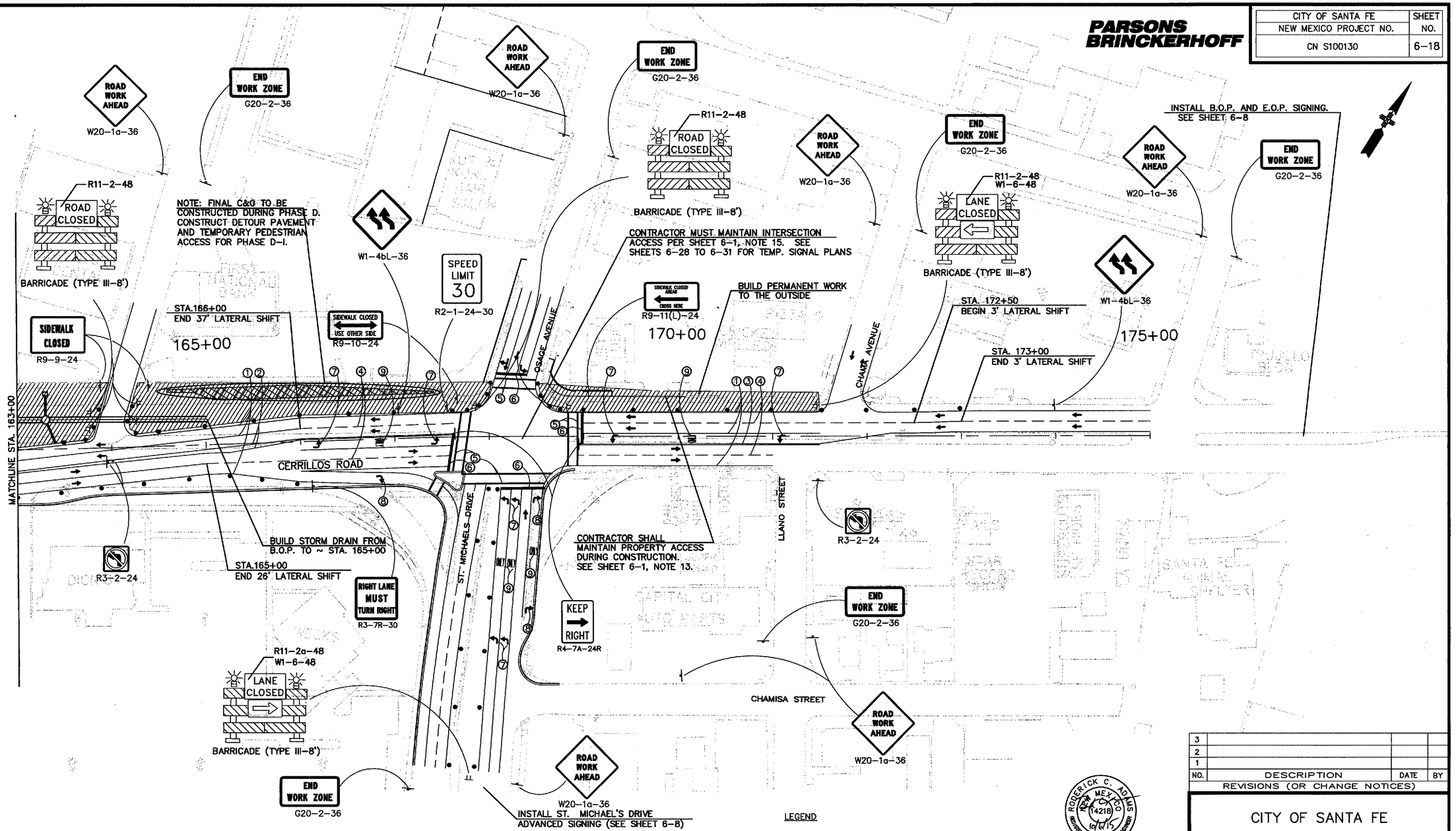

NOTES:

1. MAINTAIN B.O.P. & E.O.P. SIGNING
2. SEE SHEET 6–1, NOTE 15 FOR WORK RESTRICTIONS.
3. INSTALL TEMPORARY STRIPING FOR WORK PHASE
4. MAINTAIN PROPERTY ACCESS (SEE SHEET 6–1, NOTE 13)

STRIPING LEGEND:

① TEMPORARY 4" SOLID WHITE
② TEMPORARY 4" SOLID YELLOW
③ TEMPORARY 4" SOLID DOUBLE YELLOW
④ TEMPORARY 4" DASHED WHITE (10' STRIPE, 30' SKIP)
⑤ TEMPORARY 12" SOLID WHITE
⑥ TEMPORARY 24" SOLID WHITE
⑦ TEMPORARY PAVEMENT MARKING, LEFT ARROW
⑧ TEMPORARY PAVEMENT MARKING, RIGHT ARROW
⑨ TEMPORARY PAVEMENT MARKING, WORD "ONLY"

LEGEND

WORK ZONE

TEMPORARY PAVEMENT

DRUMS

RODERICK C. ADAMS NEW MEXICO 14218 REGISTERED PROFESSIONAL ENGINEER 10/6/15

NO.	DESCRIPTION	DATE	BY
3			
2			
1			

REVISIONS (OR CHANGE NOTICES)

CITY OF SANTA FE

CERRILLOS ROAD PHASE IIC
CAMINO CARLOS REY TO
LLANO STREET
SANTA FE COUNTY

TRAFFIC CONTROL
PHASE C

SCALE
1"=50' HORIZ.

DESIGNED BY: PB	DRAWN BY: PB	CHECKED BY: JB
DATE: 08/07/15	DATE: 08/07/15	DATE: 08/07/15

J:\33693 Cerrillos Ph IIC\04 Engineering-33693\Plans\6_Sheets\Phase C Sheets.dwg Oct 06, 2015 – 8:50am Saved By: AdamsR

N.M. PROJECT NO. CN S100130 SHEET NO. 6–18

PARSONS BRINCKERHOFF

CITY OF SANTA FE	SHEET
NEW MEXICO PROJECT NO.	NO.
CN S100130	6–19

INSTALL B.O.P. AND E.O.P. SIGNING.
SEE SHEET 6–8

ROAD WORK AHEAD
W20–1a–36

END WORK ZONE
G20–2–36

ROAD WORK AHEAD
W20–1a–36

END WORK ZONE
G20–2–36

ROAD WORK AHEAD
W20–1a–36

END WORK ZONE
G20–2–36

HARRISON ROAD

135+00

CAMINO CARLOS REY

MAINTAIN EXISTING SIGNAL

MAEZ ROAD

140+00

R3–2–24

SPEED LIMIT 30
R2–1–24–30

145+00

MACLOVIA STREET

CERRILLOS ROAD

MATCHLINE STA. 148+00

LEFT LANE MUST TURN LEFT
R3–7L–30

R11–2a–48
W1–6–48

LANE CLOSED

BARRICADE (TYPE III–8')

CLOSE LEFT LANE IN
IN ADVANCE OF WORK ZONE

CAMINO CARLOS REY

BIKE LANE ENDS
R3–17–30
R3–17B–30
B/W

KEEP RIGHT
R4–7A–24R

W1–4bR–36

STA. 141+00
BEGIN 15' LATERAL SHIFT

CAMINO CARLOS REY

ROAD WORK AHEAD
W20–1a–36

SPEED LIMIT 30
R2–1–24–30

STA. 142+75
END 15' LATERAL SHIFT

DRUM SPACING AT 50' O.C. (TYP.)

R3–2–24

NOTE: FINAL CURB TRANSITION TO BE COMPLETED AT THE END OF PHASE D, WHEN MEDIAN WORK IS COMPLETE. SHIFT TRAFFIC AS NEEDED FOR CONSTRUCTION.

ROAD WORK AHEAD
W20–1a–36

END WORK ZONE
G20–2–36

NOTES:

1. MAINTAIN B.O.P. & E.O.P. SIGNING

2. SEE SHEET 6–1, NOTE 15 FOR WORK RESTRICTIONS.

3. INSTALL TEMPORARY STRIPING FOR WORK PHASE

4. MAINTAIN PROPERTY ACCESS (SEE SHEET 6–1, NOTE 13)

STRIPING LEGEND:

① TEMPORARY 4" SOLID WHITE
② TEMPORARY 4" SOLID YELLOW
③ TEMPORARY 4" SOLID DOUBLE YELLOW
④ TEMPORARY 4" DASHED WHITE (10' STRIPE, 30' SKIP)
⑤ TEMPORARY 12" SOLID WHITE
⑥ TEMPORARY 24" SOLID WHITE
⑦ TEMPORARY PAVEMENT MARKING, LEFT ARROW
⑧ TEMPORARY PAVEMENT MARKING, RIGHT ARROW
⑨ TEMPORARY PAVEMENT MARKING, WORD "ONLY"

LEGEND

WORK ZONE

TEMPORARY PAVEMENT

DRUMS

NO.	DESCRIPTION	DATE	BY
3			
2			
1			

REVISIONS (OR CHANGE NOTICES)

ROGERICK C. ADAMS NEW MEXICO 14218 REGISTERED PROFESSIONAL ENGINEER 10/07/15

SCALE 1"=50' HORIZ.

DESIGNED BY: PB	DRAWN BY: PB	CHECKED BY: JB
DATE: 08/07/15	DATE: 08/07/15	DATE: 08/07/15

CITY OF SANTA FE

CERRILLOS ROAD PHASE IIC
CAMINO CARLOS REY TO LLANO STREET
SANTA FE COUNTY

TRAFFIC CONTROL PHASE D–I

J:\33693 Cerrillos Ph IIC\04 Engineering–33693\Plans\6_Sheets\Phase D–I Sheets.dwg Oct 06, 2015 – 8:51am Saved By: AdamsR

N.M. PROJECT NO. CN S100130 SHEET NO. 6–19

PARSONS BRINCKERHOFF

CITY OF SANTA FE	SHEET
NEW MEXICO PROJECT NO.	NO.
CN S100130	6–20

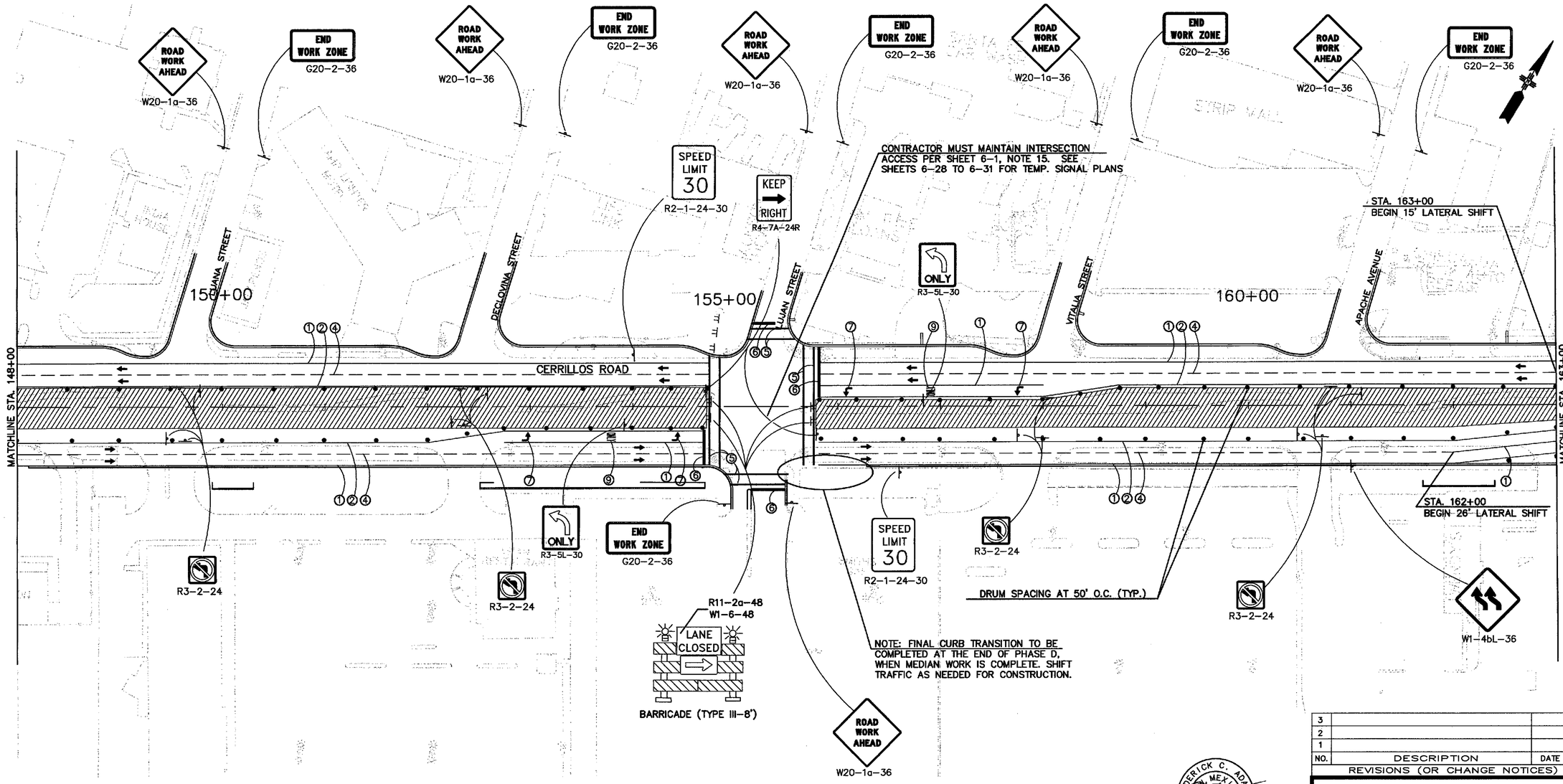

NOTES:

1. MAINTAIN B.O.P. & E.O.P. SIGNING
2. SEE SHEET 6–1, NOTE 15 FOR WORK RESTRICTIONS.
3. INSTALL TEMPORARY STRIPING FOR WORK PHASE
4. MAINTAIN PROPERTY ACCESS (SEE SHEET 6–1, NOTE 13)

STRIPING LEGEND:

① TEMPORARY 4" SOLID WHITE
② TEMPORARY 4" SOLID YELLOW
③ TEMPORARY 4" SOLID DOUBLE YELLOW
④ TEMPORARY 4" DASHED WHITE (10' STRIPE, 30' SKIP)
⑤ TEMPORARY 12" SOLID WHITE
⑥ TEMPORARY 24" SOLID WHITE
⑦ TEMPORARY PAVEMENT MARKING, LEFT ARROW
⑧ TEMPORARY PAVEMENT MARKING, RIGHT ARROW
⑨ TEMPORARY PAVEMENT MARKING, WORD "ONLY"

LEGEND

WORK ZONE

TEMPORARY PAVEMENT

DRUMS

NO.	DESCRIPTION	DATE	BY
3			
2			
1			

REVISIONS (OR CHANGE NOTICES)

ROGERICK C. ADAMS — NEW MEXICO — 14218 — 10/6/15 — REGISTERED PROFESSIONAL ENGINEER

CITY OF SANTA FE

CERRILLOS ROAD PHASE IIC
CAMINO CARLOS REY TO
LLANO STREET
SANTA FE COUNTY

TRAFFIC CONTROL
PHASE D–I

SCALE 1"=50' HORIZ.

DESIGNED BY: PB	DRAWN BY: PB	CHECKED BY: JB
DATE: 08/07/15	DATE: 08/07/15	DATE: 08/07/15

J:\33693 Cerrillos Ph IIC\04 Engineering–33693\Plans\6_Sheets\Phase D–I Sheets.dwg Oct 06, 2015 – 8:52am Saved By: AdamsR

N.M. PROJECT NO. CN S100130 SHEET NO. 6–20

PARSONS BRINCKERHOFF

CITY OF SANTA FE	SHEET
NEW MEXICO PROJECT NO.	NO.
CN S100130	6–21

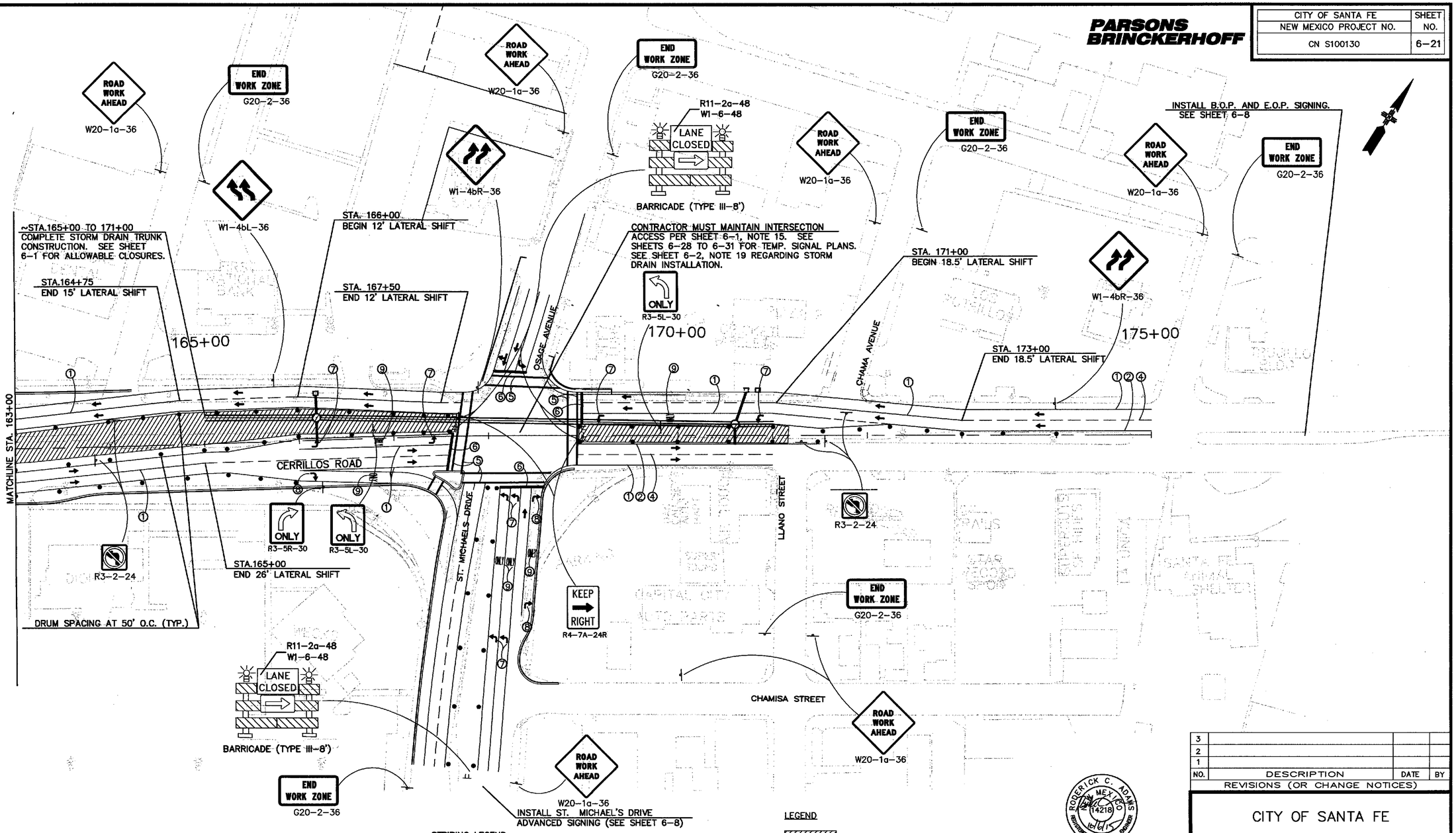

NOTES:

1. MAINTAIN B.O.P. & E.O.P. SIGNING
2. SEE SHEET 6-1, NOTE 15 FOR WORK RESTRICTIONS.
3. INSTALL TEMPORARY STRIPING FOR WORK PHASE
4. MAINTAIN PROPERTY ACCESS (SEE SHEET 6-1, NOTE 13)

STRIPING LEGEND:

1. TEMPORARY 4" SOLID WHITE
2. TEMPORARY 4" SOLID YELLOW
3. TEMPORARY 4" SOLID DOUBLE YELLOW
4. TEMPORARY 4" DASHED WHITE (10' STRIPE, 30' SKIP)
5. TEMPORARY 12" SOLID WHITE
6. TEMPORARY 24" SOLID WHITE
7. TEMPORARY PAVEMENT MARKING, LEFT ARROW
8. TEMPORARY PAVEMENT MARKING, RIGHT ARROW
9. TEMPORARY PAVEMENT MARKING, WORD "ONLY"

LEGEND

- WORK ZONE
- TEMPORARY PAVEMENT
- DRUMS

NO.	DESCRIPTION	DATE	BY
3			
2			
1			

REVISIONS (OR CHANGE NOTICES)

RODERICK C. ADAMS NEW MEXICO 14218 REGISTERED PROFESSIONAL ENGINEER 10/6/15

CITY OF SANTA FE

CERRILLOS ROAD PHASE IIC
CAMINO CARLOS REY TO
LLANO STREET
SANTA FE COUNTY

TRAFFIC CONTROL
PHASE D-I

SCALE
1"=50' HORIZ.

DESIGNED BY: PB	DRAWN BY: PB	CHECKED BY: JB
DATE: 08/07/15	DATE: 08/07/15	DATE: 08/07/15

J:\33693 Cerrillos Ph IIC\04 Engineering-33693\Plans\6_Sheets\Phase D-I Sheets.dwg Oct 06, 2015 - 8:52am Saved By: AdamsR

N.M. PROJECT NO. CN S100130 SHEET NO. 6-21

PARSONS BRINCKERHOFF

CITY OF SANTA FE	SHEET
NEW MEXICO PROJECT NO.	NO.
CN S100130	6–22

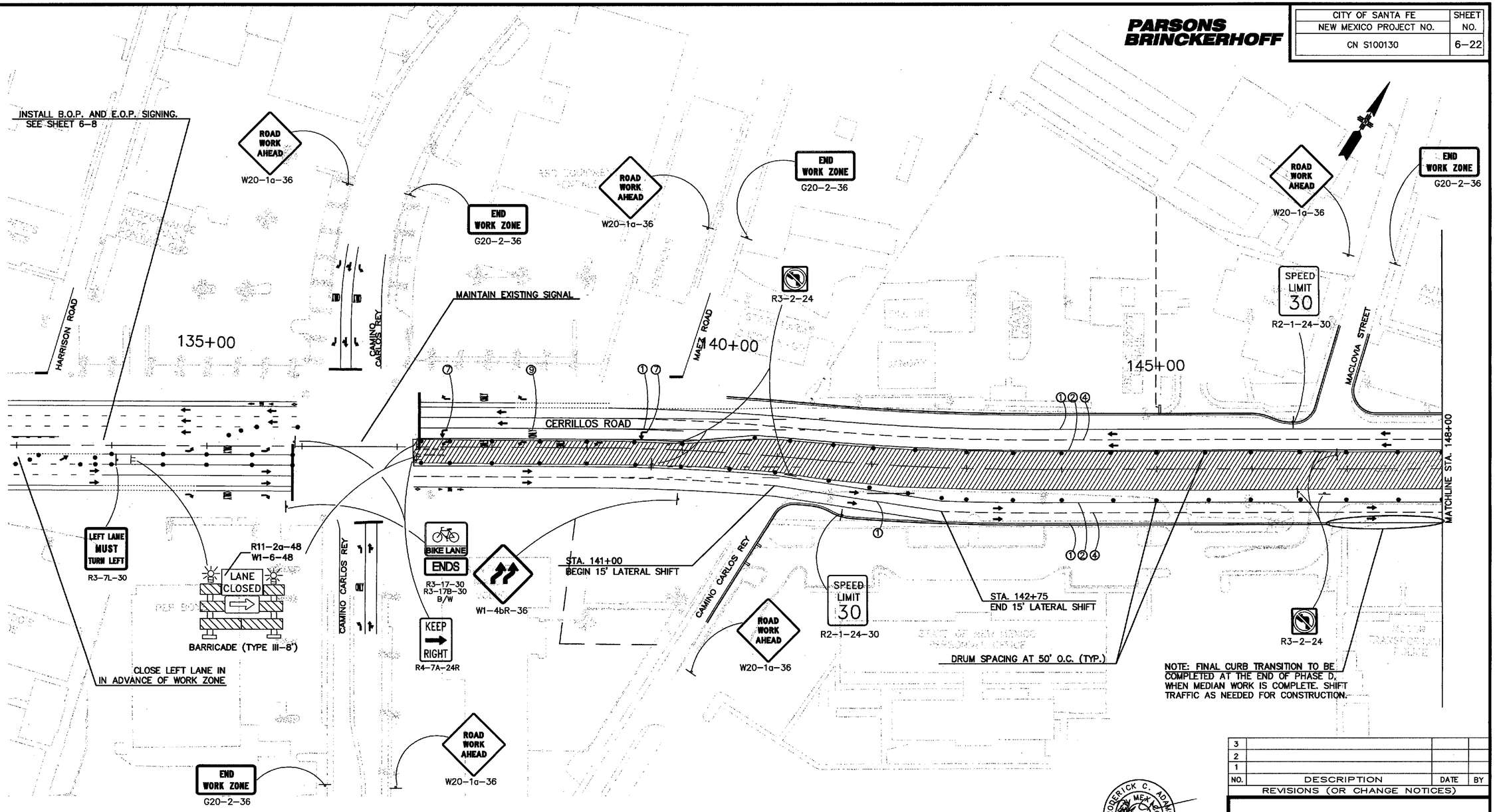

NOTES:

1. MAINTAIN B.O.P. & E.O.P. SIGNING
2. SEE SHEET 6–1, NOTE 15 FOR WORK RESTRICTIONS.
3. INSTALL TEMPORARY STRIPING FOR WORK PHASE
4. MAINTAIN PROPERTY ACCESS (SEE SHEET 6–1, NOTE 13)

STRIPING LEGEND:

1. TEMPORARY 4" SOLID WHITE
2. TEMPORARY 4" SOLID YELLOW
3. TEMPORARY 4" SOLID DOUBLE YELLOW
4. TEMPORARY 4" DASHED WHITE (10' STRIPE, 30' SKIP)
5. TEMPORARY 12" SOLID WHITE
6. TEMPORARY 24" SOLID WHITE
7. TEMPORARY PAVEMENT MARKING, LEFT ARROW
8. TEMPORARY PAVEMENT MARKING, RIGHT ARROW
9. TEMPORARY PAVEMENT MARKING, WORD "ONLY"

LEGEND

- WORK ZONE
- TEMPORARY PAVEMENT
- DRUMS

NO.	DESCRIPTION	DATE	BY
3			
2			
1			

REVISIONS (OR CHANGE NOTICES)

RODERICK C. ADAMS NEW MEXICO 14218 REGISTERED PROFESSIONAL ENGINEER 10/6/15

SCALE 1"=50' HORIZ.

DESIGNED BY: PB	DRAWN BY: PB	CHECKED BY: JB
DATE: 08/07/15	DATE: 08/07/15	DATE: 08/07/15

CITY OF SANTA FE

CERRILLOS ROAD PHASE IIC
CAMINO CARLOS REY TO LLANO STREET
SANTA FE COUNTY

TRAFFIC CONTROL PHASE D–II

PARSONS BRINCKERHOFF

CITY OF SANTA FE	SHEET
NEW MEXICO PROJECT NO.	NO.
CN S100130	6–23

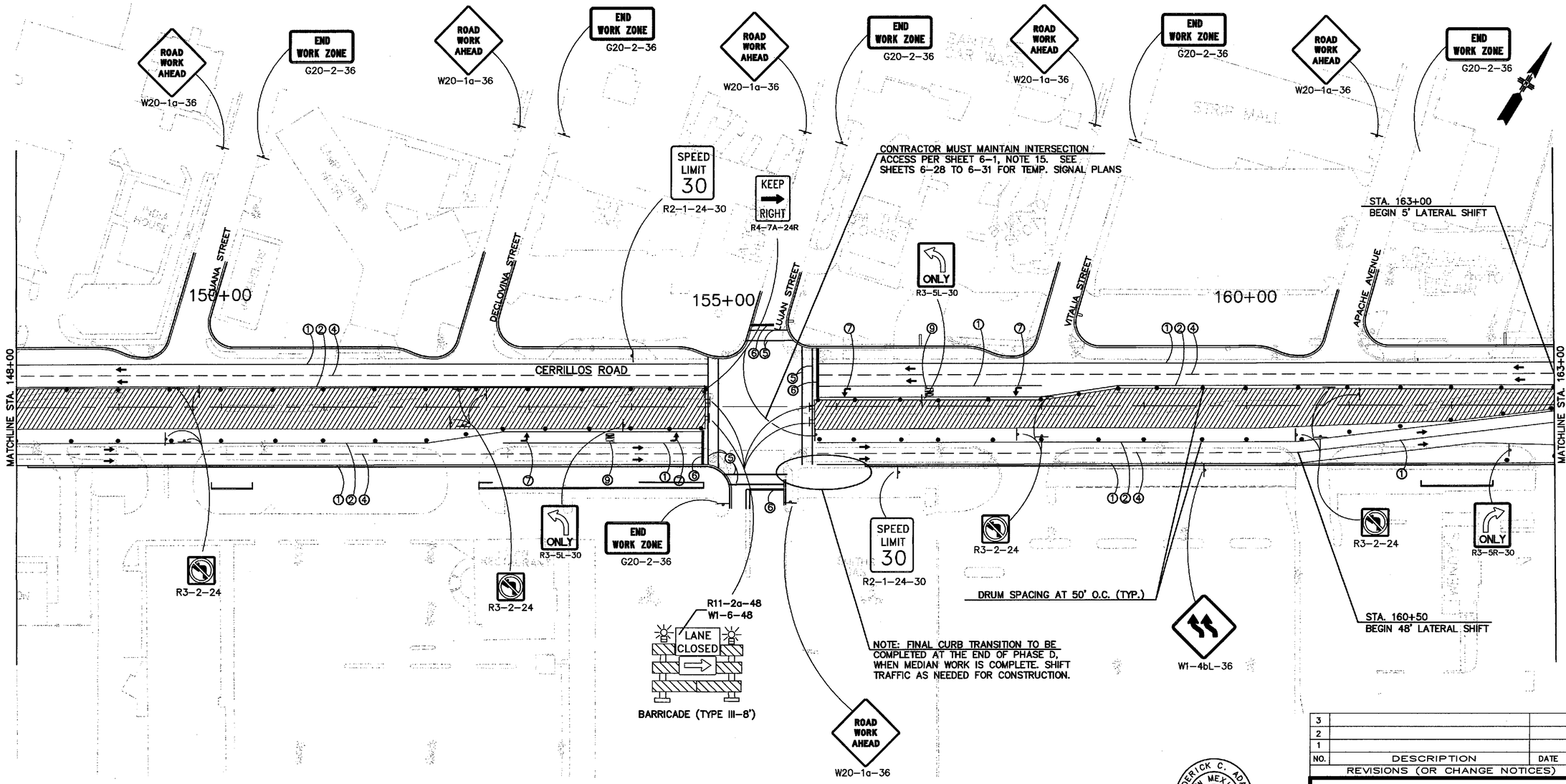

NOTES:

1. MAINTAIN B.O.P. & E.O.P. SIGNING
2. SEE SHEET 6–1, NOTE 15 FOR WORK RESTRICTIONS.
3. INSTALL TEMPORARY STRIPING FOR WORK PHASE
4. MAINTAIN PROPERTY ACCESS (SEE SHEET 6–1, NOTE 13)

STRIPING LEGEND:

① TEMPORARY 4" SOLID WHITE
② TEMPORARY 4" SOLID YELLOW
③ TEMPORARY 4" SOLID DOUBLE YELLOW
④ TEMPORARY 4" DASHED WHITE (10' STRIPE, 30' SKIP)
⑤ TEMPORARY 12" SOLID WHITE
⑥ TEMPORARY 24" SOLID WHITE
⑦ TEMPORARY PAVEMENT MARKING, LEFT ARROW
⑧ TEMPORARY PAVEMENT MARKING, RIGHT ARROW
⑨ TEMPORARY PAVEMENT MARKING, WORD "ONLY"

LEGEND

WORK ZONE

TEMPORARY PAVEMENT

DRUMS

NO.	DESCRIPTION	DATE	BY
3			
2			
1			

REVISIONS (OR CHANGE NOTICES)

RODERICK C. ADAMS NEW MEXICO 21421 10/6/15 REGISTERED PROFESSIONAL ENGINEER

SCALE 1"=50' HORIZ.

DESIGNED BY: PB	DRAWN BY: PB	CHECKED BY: JB
DATE: 08/07/15	DATE: 08/07/15	DATE: 08/07/15

CITY OF SANTA FE

CERRILLOS ROAD PHASE IIC
CAMINO CARLOS REY TO
LLANO STREET
SANTA FE COUNTY

TRAFFIC CONTROL
PHASE D–II

PARSONS BRINCKERHOFF

CITY OF SANTA FE	SHEET
NEW MEXICO PROJECT NO.	NO.
CN S100130	6-24

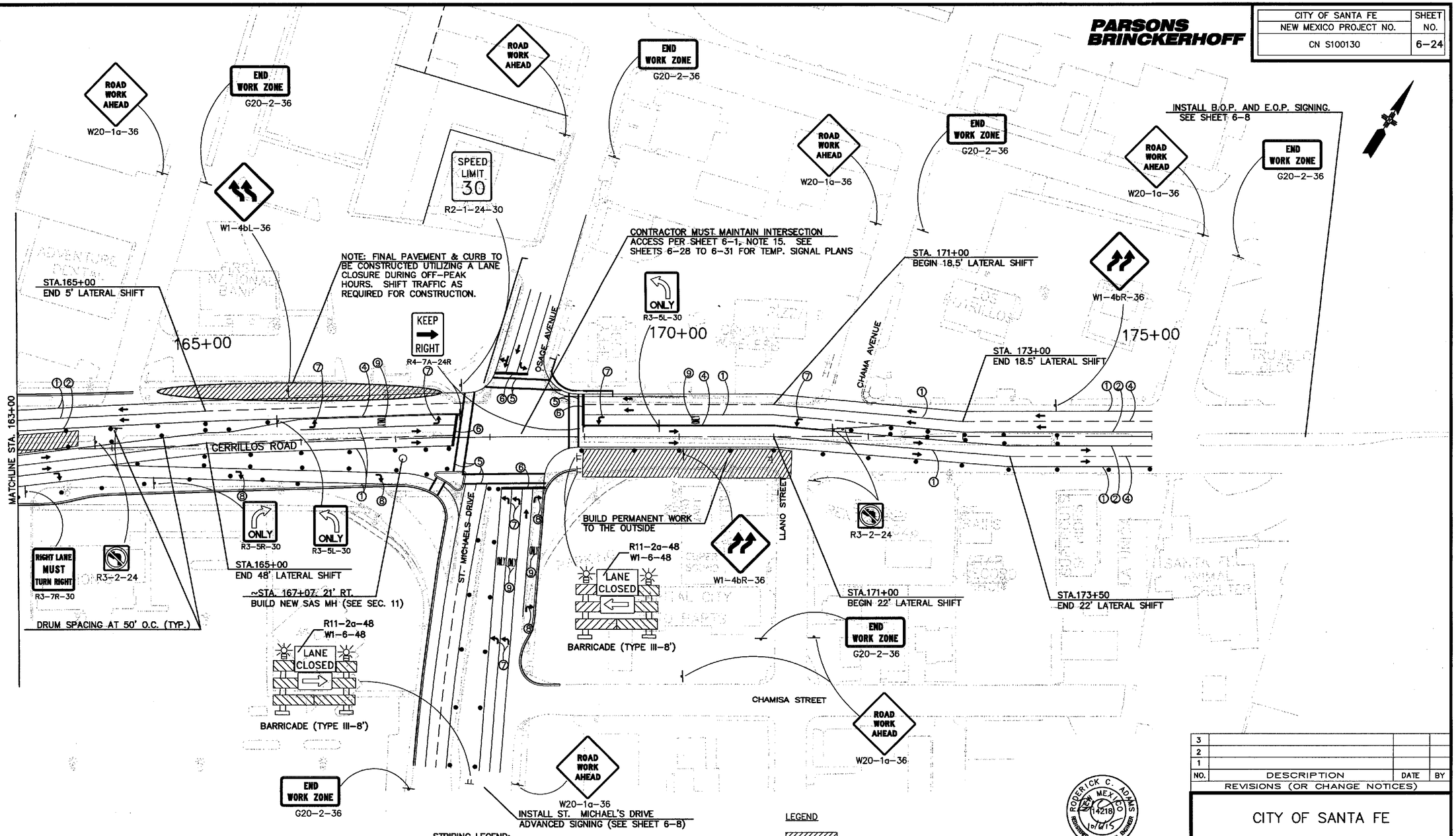

NOTES:

1. MAINTAIN B.O.P. & E.O.P. SIGNING
2. SEE SHEET 6-1, NOTE 15 FOR WORK RESTRICTIONS.
3. INSTALL TEMPORARY STRIPING FOR WORK PHASE
4. MAINTAIN PROPERTY ACCESS (SEE SHEET 6-1, NOTE 13)

STRIPING LEGEND:

① TEMPORARY 4" SOLID WHITE
② TEMPORARY 4" SOLID YELLOW
③ TEMPORARY 4" SOLID DOUBLE YELLOW
④ TEMPORARY 4" DASHED WHITE (10' STRIPE, 30' SKIP)
⑤ TEMPORARY 12" SOLID WHITE
⑥ TEMPORARY 24" SOLID WHITE
⑦ TEMPORARY PAVEMENT MARKING, LEFT ARROW
⑧ TEMPORARY PAVEMENT MARKING, RIGHT ARROW
⑨ TEMPORARY PAVEMENT MARKING, WORD "ONLY"

LEGEND

WORK ZONE

TEMPORARY PAVEMENT

DRUMS

ROBERICK C. ADAMS NEW MEXICO 14218 REGISTERED PROFESSIONAL ENGINEER 10/15

NO.	DESCRIPTION	DATE	BY
3			
2			
1			

REVISIONS (OR CHANGE NOTICES)

CITY OF SANTA FE

CERRILLOS ROAD PHASE IIC
CAMINO CARLOS REY TO
LLANO STREET
SANTA FE COUNTY

TRAFFIC CONTROL
PHASE D-II

SCALE 1"=50' HORIZ.

DESIGNED BY: PB	DRAWN BY: PB	CHECKED BY: JB
DATE: 08/07/15	DATE: 08/07/15	DATE: 08/07/15

PARSONS BRINCKERHOFF

CITY OF SANTA FE	SHEET
NEW MEXICO PROJECT NO.	NO.
CN S100130	6–25

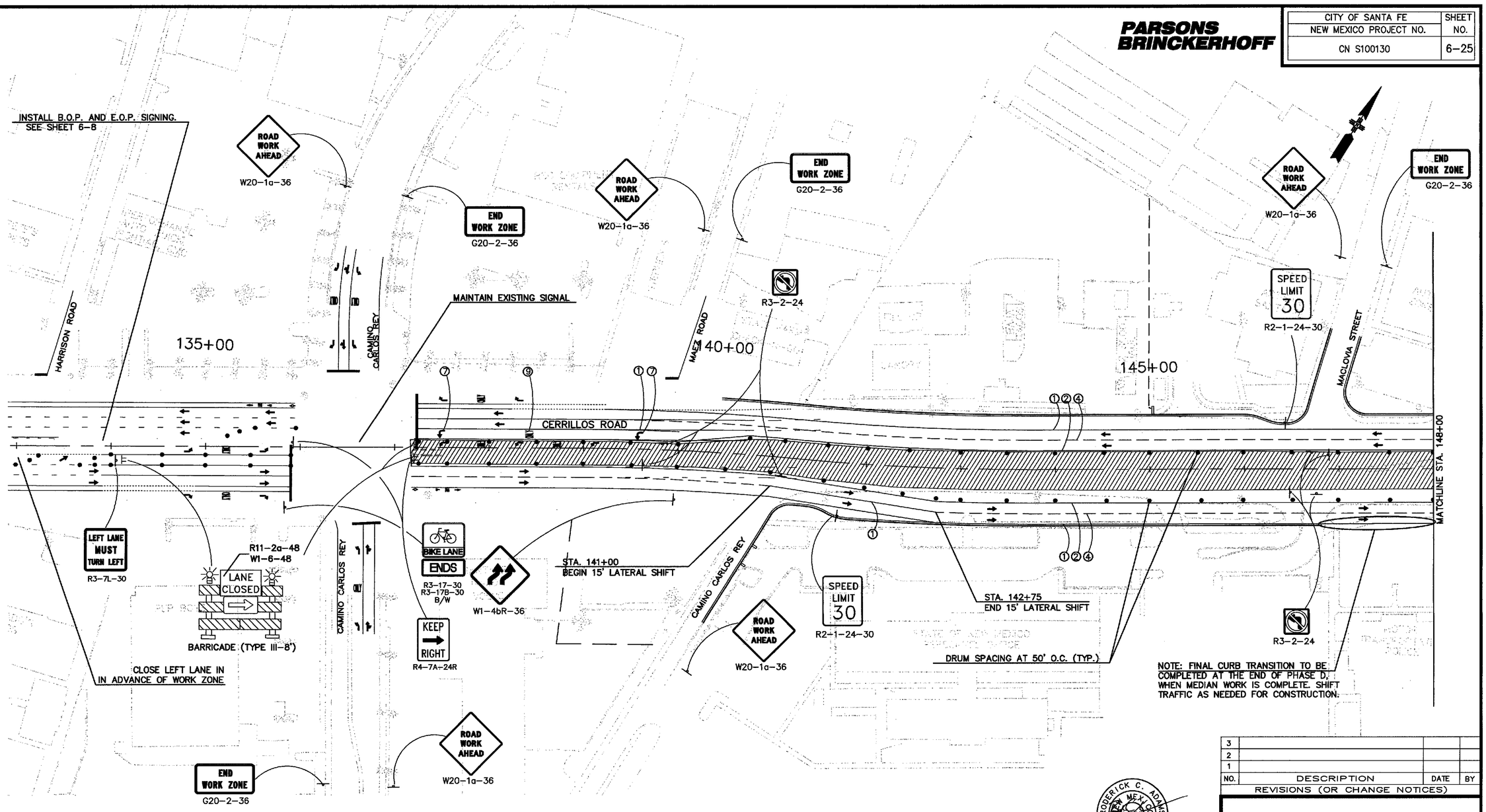

NOTES:

1. MAINTAIN B.O.P. & E.O.P. SIGNING
2. SEE SHEET 6–1, NOTE 15 FOR WORK RESTRICTIONS.
3. INSTALL TEMPORARY STRIPING FOR WORK PHASE
4. MAINTAIN PROPERTY ACCESS (SEE SHEET 6–1, NOTE 13)

STRIPING LEGEND:

① TEMPORARY 4" SOLID WHITE
② TEMPORARY 4" SOLID YELLOW
③ TEMPORARY 4" SOLID DOUBLE YELLOW
④ TEMPORARY 4" DASHED WHITE (10' STRIPE, 30' SKIP)
⑤ TEMPORARY 12" SOLID WHITE
⑥ TEMPORARY 24" SOLID WHITE
⑦ TEMPORARY PAVEMENT MARKING, LEFT ARROW
⑧ TEMPORARY PAVEMENT MARKING, RIGHT ARROW
⑨ TEMPORARY PAVEMENT MARKING, WORD "ONLY"

LEGEND

WORK ZONE

TEMPORARY PAVEMENT

DRUMS

RODERICK C. ADAMS NEW MEXICO 14218 REGISTERED PROFESSIONAL ENGINEER 10/16/15

NO.	DESCRIPTION	DATE	BY
3			
2			
1			

REVISIONS (OR CHANGE NOTICES)

CITY OF SANTA FE

CERRILLOS ROAD PHASE IIC
CAMINO CARLOS REY TO
LLANO STREET
SANTA FE COUNTY

TRAFFIC CONTROL
PHASE D–III

SCALE 1"=50' HORIZ.

DESIGNED BY: PB	DRAWN BY: PB	CHECKED BY: JB
DATE: 08/07/15	DATE: 08/07/15	DATE: 08/07/15

J:\33693 Cerrillos Ph IIC\04 Engineering–33693\Plans\6_Sheets\Phase D–III Sheets.dwg Oct 06, 2015 – 9:02am Saved By: AdamsR

N.M. PROJECT NO. CN S100130 SHEET NO. 6–25

PARSONS BRINCKERHOFF

CITY OF SANTA FE	SHEET
NEW MEXICO PROJECT NO.	NO.
CN S100130	6–26

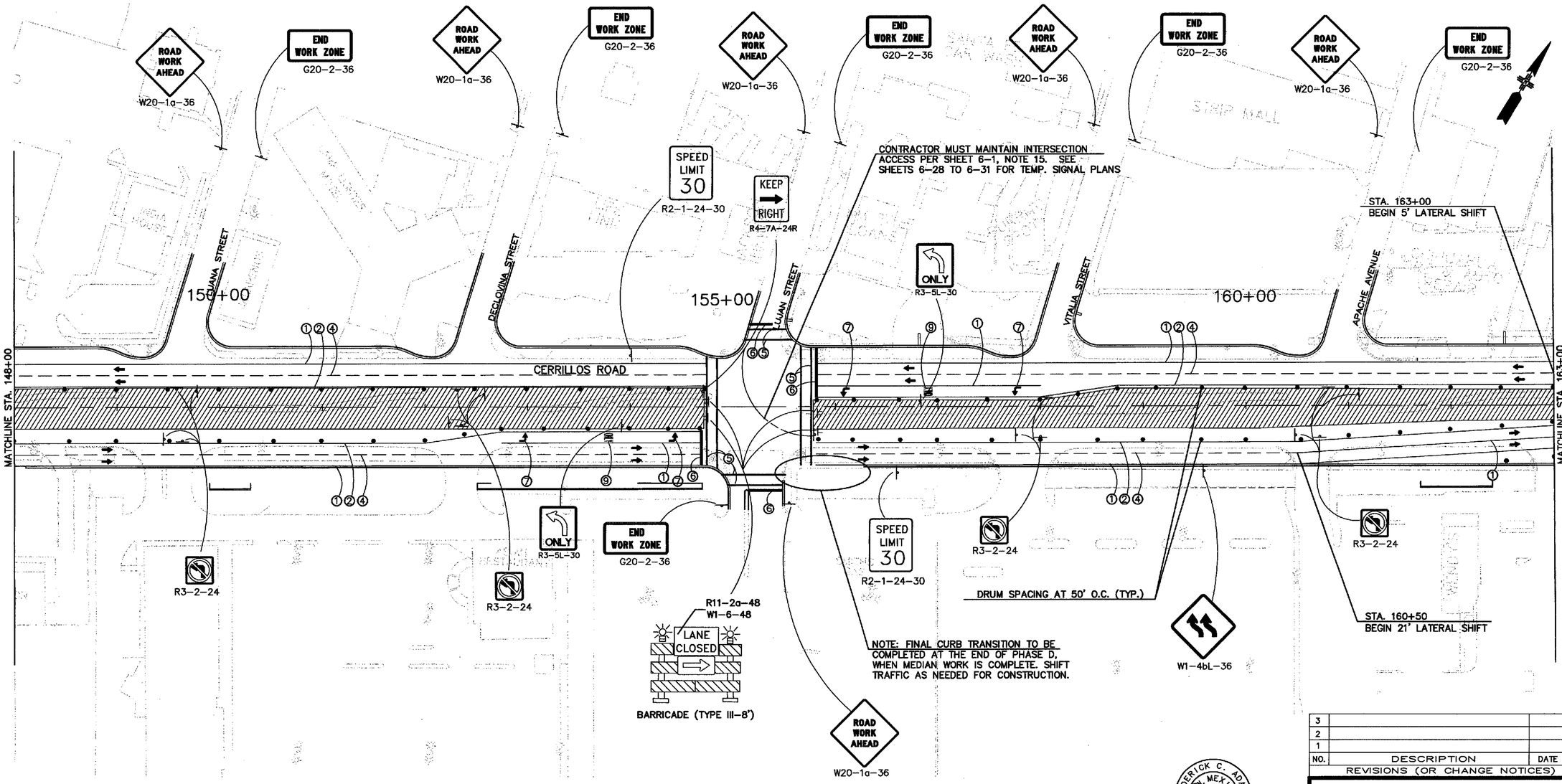

NOTES:

1. MAINTAIN B.O.P. & E.O.P. SIGNING
2. SEE SHEET 6–1, NOTE 15 FOR WORK RESTRICTIONS.
3. INSTALL TEMPORARY STRIPING FOR WORK PHASE
4. MAINTAIN PROPERTY ACCESS (SEE SHEET 6–1, NOTE 13)

STRIPING LEGEND:

① TEMPORARY 4" SOLID WHITE
② TEMPORARY 4" SOLID YELLOW
③ TEMPORARY 4" SOLID DOUBLE YELLOW
④ TEMPORARY 4" DASHED WHITE (10' STRIPE, 30' SKIP)
⑤ TEMPORARY 12" SOLID WHITE
⑥ TEMPORARY 24" SOLID WHITE
⑦ TEMPORARY PAVEMENT MARKING, LEFT ARROW
⑧ TEMPORARY PAVEMENT MARKING, RIGHT ARROW
⑨ TEMPORARY PAVEMENT MARKING, WORD "ONLY"

LEGEND

WORK ZONE

TEMPORARY PAVEMENT

DRUMS

NO.	DESCRIPTION	DATE	BY
3			
2			
1			

REVISIONS (OR CHANGE NOTICES)

RODERICK C. ADAMS — NEW MEXICO — 14218 — REGISTERED PROFESSIONAL ENGINEER — 10/4/15

DESIGNED BY: PB	DRAWN BY: PB	CHECKED BY: JB
DATE: 08/07/15	DATE: 08/07/15	DATE: 08/07/15

SCALE 1"=50' HORIZ.

CITY OF SANTA FE

CERRILLOS ROAD PHASE IIC
CAMINO CARLOS REY TO LLANO STREET
SANTA FE COUNTY

TRAFFIC CONTROL PHASE D–III

J:\33693 Cerrillos Ph IIC\04 Engineering–33693\Plans\6_Sheets\Phase D–III Sheets.dwg Oct 06, 2015 – 9:02am Saved By: AdamsR

N.M. PROJECT NO. CN S100130 SHEET NO. 6–26

PARSONS BRINCKERHOFF

CITY OF SANTA FE	SHEET
NEW MEXICO PROJECT NO.	NO.
CN S100130	6–27

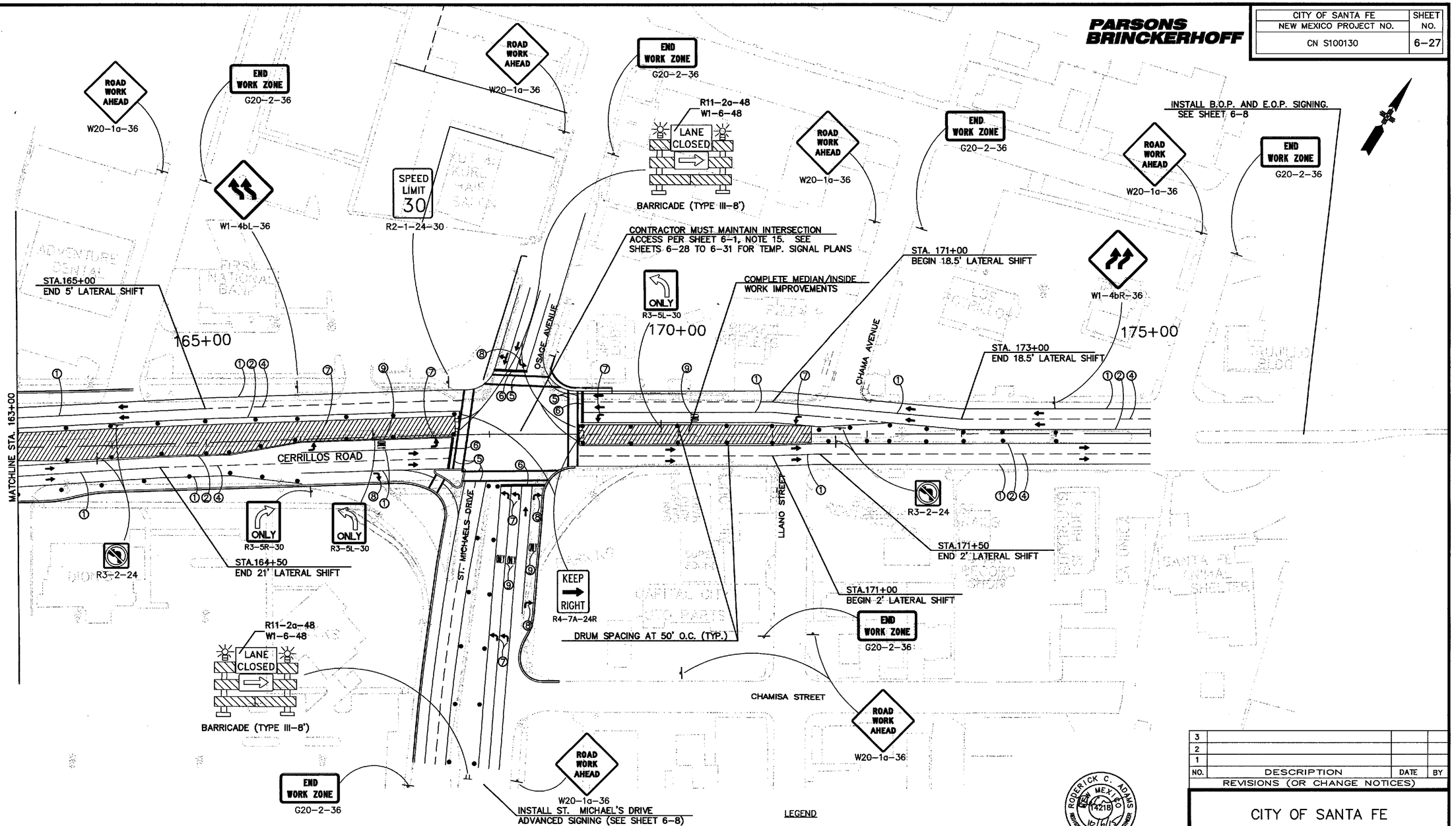

NOTES:

1. MAINTAIN B.O.P. & E.O.P. SIGNING
2. SEE SHEET 6–1, NOTE 15 FOR WORK RESTRICTIONS.
3. INSTALL TEMPORARY STRIPING FOR WORK PHASE
4. MAINTAIN PROPERTY ACCESS (SEE SHEET 6–1, NOTE 13)

STRIPING LEGEND:

1. TEMPORARY 4" SOLID WHITE
2. TEMPORARY 4" SOLID YELLOW
3. TEMPORARY 4" SOLID DOUBLE YELLOW
4. TEMPORARY 4" DASHED WHITE (10' STRIPE, 30' SKIP)
5. TEMPORARY 12" SOLID WHITE
6. TEMPORARY 24" SOLID WHITE
7. TEMPORARY PAVEMENT MARKING, LEFT ARROW
8. TEMPORARY PAVEMENT MARKING, RIGHT ARROW
9. TEMPORARY PAVEMENT MARKING, WORD "ONLY"

LEGEND

- WORK ZONE
- TEMPORARY PAVEMENT
- DRUMS

RODERICK C. ADAMS NEW MEXICO 14218 REGISTERED PROFESSIONAL ENGINEER 10/16/15

NO.	DESCRIPTION	DATE	BY
3			
2			
1			

REVISIONS (OR CHANGE NOTICES)

CITY OF SANTA FE

CERRILLOS ROAD PHASE IIC
CAMINO CARLOS REY TO
LLANO STREET
SANTA FE COUNTY

TRAFFIC CONTROL
PHASE D–III

SCALE 1"=50' HORIZ.

DESIGNED BY: PB	DRAWN BY: PB	CHECKED BY: JB
DATE: 08/07/15	DATE: 08/07/15	DATE: 08/07/15

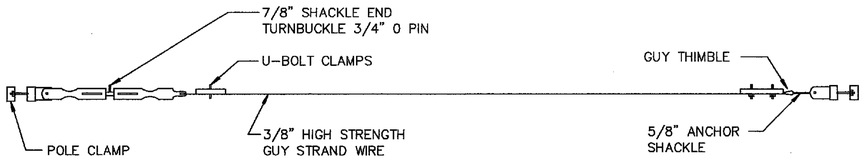

SPAN WIRE DETAIL

NOT TO SCALE

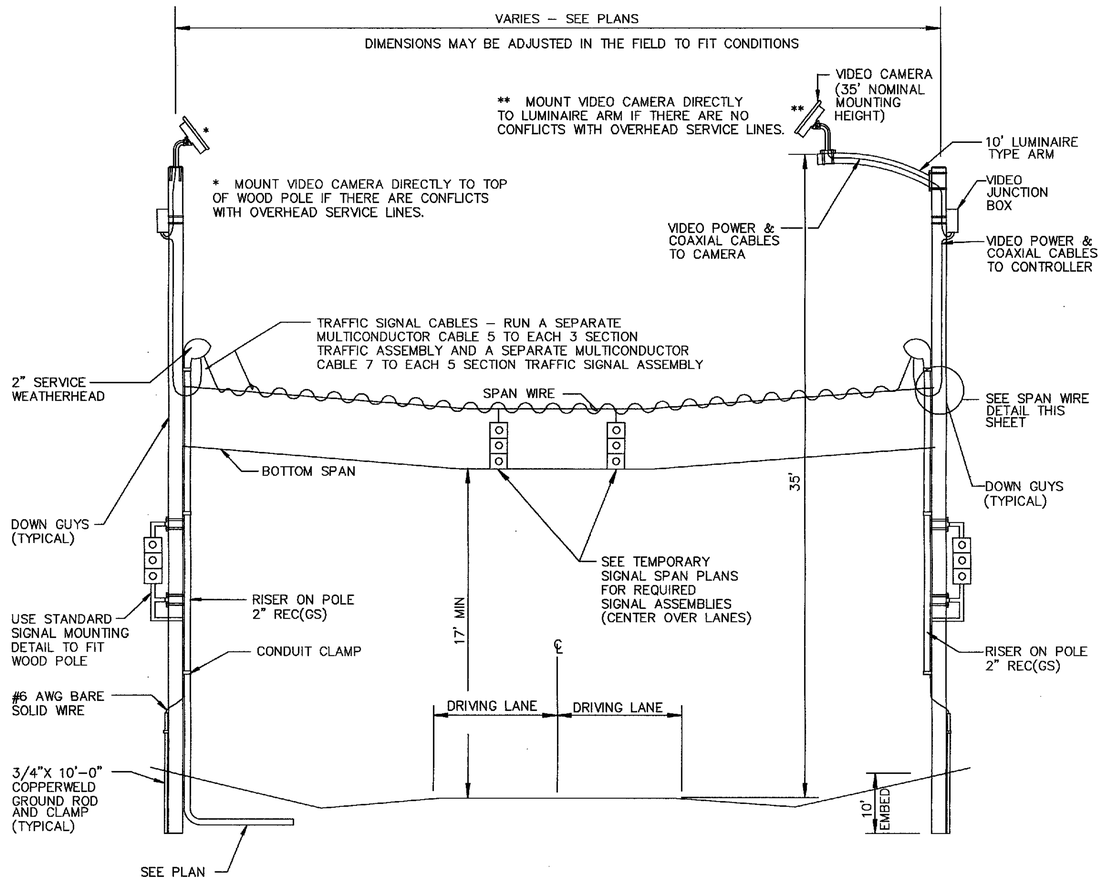

TYPICAL TEMPORARY SIGNAL SPAN DETAIL

NOT TO SCALE

PARSONS BRINCKERHOFF

CITY OF SANTA FE	SHEET
NEW MEXICO PROJECT NO.	NO.
CN S100130	6–28

NOTES:

1. ALL COSTS TO INSTALL, OPERATE, MAINTAIN, AND REMOVE THE TEMPORARY SIGNAL SPAN, EXCEPT AS NOTED HEREIN, SHALL BE INCLUDED IN UNIT PRICE BID FOR ITEM 702700 TEMPORARY SIGNAL SPAN. TEMPORARY SIGNAL SPAN MATERIALS MAY BE REUSED AT OTHER TEMPORARY SIGNAL SPAN LOCATIONS, BUT NOT FOR THE PERMANENT INSTALLATION. UPON COMPLETION OF THE TEMPORARY SIGNAL SPAN, THE CONTRACTOR SHALL REMOVE ALL TEMPORARY EQUIPMENT INCLUDING FOUNDATIONS, PULL BOXES, AND TRAFFIC MANHOLES. CONDUITS, PULL BOXES, AND TRAFFIC MANHOLES MAY BE ABANDONED IN PLACE ONLY WHEN SPECIFICALLY APPROVED BY THE PROJECT MANAGER. ALL TEMPORARY SIGNAL SPAN EQUIPMENT WILL REMAIN THE PROPERTY OF THE CITY OF SANTA FE.
2. THE INSTALLATION OF THE SIGNAL CONTROLLER CABINET, CONTROLLER, SIGNAL SPANS, HEADS, WIRING, MACHINE VISION VEHICLE DETECTION SYSTEM, VIDEO CAMERAS, EMERGENCY VEHICLE PRE–EMPTION EQUIPMENT, AND ALL MATERIAL NOT SPECIFICALLY CALLED FOR ON THESE PLANS, BUT NECESSARY FOR AN OPERATING SYSTEM IN COMPLIANCE WITH THE NATIONAL ELECTRIC CODE, SHALL BE PROVIDED BY THE CONTRACTOR.
3. ALL MATERIAL AND INSTALLATION METHODS FOR THE SIGNAL SHALL BE IN CONFORMANCE WITH THE APPLICABLE PARTS OF THE NMDOT STANDARD SPECIFICATIONS.
4. ALL SYSTEM MAINTENANCE AND ELECTRICAL ENERGY COSTS SHALL BE PAID BY THE CONTRACTOR UNTIL FINAL ACCEPTANCE.
5. SIGNAL TIMING SHALL BE PROGRAMMED INTO SIGNAL CONTROL EQUIPMENT BY THE CONTRACTOR WITH EQUIPMENT MANUFACTURER'S FIELD ASSISTANCE. SIGNAL TIMING WILL BE PROVIDED BY THE CITY OF SANTA FE.
6. IN THE EVENT OF ACCIDENTAL DAMAGE TO THE SIGNAL SYSTEM OR POWER OUTAGE, THE CONTRACTOR SHALL PROVIDE FLAGGERS OR TEMPORARY STOP SIGNS FOR THE DURATION OF PERIOD OF NON–OPERATION TO CONTROL TRAFFIC. ANY EQUIPMENT SHALL BE REPLACED BY THE CONTRACTOR AT NO EXPENSE TO THE PROJECT.

NO.	DESCRIPTION	DATE	BY
3			
2			
1			

REVISIONS (OR CHANGE NOTICES)

PAUL F. STEFFEN NEW MEXICO 15092 REGISTERED PROFESSIONAL ENGINEER 10/16/2015

CITY OF SANTA FE

CERRILLOS ROAD PHASE IIC
CAMINO CARLOS REY TO
LLANO STREET
SANTA FE COUNTY

TEMPORARY SIGNAL SPAN
NOTES AND DETAILS

DESIGNED BY: PB	DRAWN BY: PB –	CHECKED BY: JBPS
DATE: 08/07/15	DATE: 08/07/15	DATE: 08/07/15

ITEM 702700 – TEMPORARY SIGNAL SPAN (LUMP SUM)

ESTIMATED TEMPORARY SIGNAL SPAN MATERIALS
(FOR CONTRACTOR'S INFORMATION ONLY)

MATERIAL LIST	UNIT	TEMPORARY SIGNAL SPAN #1 CERRILLOS RD @ LUJAN ST. INTERSECTION	TEMPORARY SIGNAL SPAN #2 CERRILLOS RD @ OSAGE/ST. MICHAELS INTERSECTION		TOTAL	KEYED NOTES
SERVICE POLE	EACH	1	1		2	(3)
SERVICE RISER	EACH	1	1		2	(3)
METER PEDESTAL	EACH	1	1		2	(2)
WOOD POLE FULLY TREATED	EACH	4	4		8	(1)
EYE BOLT 5/8"	EACH	8	8		16	(1)
2" SERVICE ENTRANCE WEATHERHEAD	EACH	4	4		8	(1)
CONDUIT CLAMPS	AS REQUIRED	AS REQUIRED	AS REQUIRED		AS REQUIRED	(1)
NIPPLES, ELBOWS AND TEES	AS REQUIRED	AS REQUIRED	AS REQUIRED		AS REQUIRED	(1)
COPPERWELD 3/4"X10' GROUND ROD	EACH	4	4		8	(1)
GROUND ROD CLAMP	EACH	4	4		8	(1)
NO. 6 BARE COPPER GROUND WIRE	LF	24	24		48	(1)
3/8" HIGH STRENGTH GUY WIRE, POLE CLAMPS	SPANS	4	4		8	(1)
TURNBUCKLE THIMBLES						
U-BOLT CLAMPS, AND DOWN GUYS	GUYS	4	4		8	(1)
LUMINAIRE ARM FOR VIDEO CAMERA	EACH	4	4		8	(1)
3" RIGID ELECTRICAL CONDUIT	LF	550	550		1100	(1)
ELECTRICAL PULLBOX (STANDARD)	EACH	4	4		8	(1)
MULTI CONDUCTOR CABLE 5	LF	1000	1000		2000	(1)
MULTI CONDUCTOR CABLE 7	LF	400	400		800	(1)
MULTI CONDUCTOR CABLE 20	LF	800	800		1600	(1)
SINGLE CONDUCTOR 6	LF	400	400		800	(1)
3 SECTION TRAFFIC SIGNAL ASSEMBLY	EACH	10	8		18	(3)
3 SECTION BACKPLATE	EACH	6	3		9	(3)
4 SECTION TRAFFIC SIGNAL ASSEMBLY	EACH	4			4	(3)
5 SECTION TRAFFIC SIGNAL ASSEMBLY	EACH	4	6		10	(3)
5 SECTION BACKPLATE	EACH	1	3		4	(3)
PEDESTRIAN SIGNAL	EACH	8	8		16	(3)
PUSH BUTTON STATION	EACH	8	8		16	(3)
OPTICAL DETECTOR	EACH	0	0		0	
OPTICAL DETECTOR CABLE	LF	0	0		0	
MACHINE VISION VEHICLE DETECTION SYSTEM	EACH	1	1		1/1	(4)
VIDEO COAXIAL CABLE	LF	1000	1000		2000	(1)
VIDEO POWER CABLE	LF	1000	1000		2000	(1)
VIDEO CAMERA	EACH	4	4		8	(4)
CONTROLLER AND CABINET	EACH	1	1		2	(2)

PARSONS BRINCKERHOFF

CITY OF SANTA FE	SHEET
NEW MEXICO PROJECT NO.	NO.
CN S100130	6-29

KEYED NOTES

(1) TO BE FURNISHED, INSTALLED AND REMOVED BY THE CONTRACTOR FOR TEMPORARY SIGNAL.

(2) TO BE FURNISHED AND INSTALLED BY THE CONTRACTOR AND SHALL BE PAID FOR ONE TIME AS IDENTIFIED IN PERMANENT SIGNAL EQUIPMENT QUANTITIES (SHEET 9-2).

(3) TO BE SALVAGED FROM EXISTING INTERSECTION.

(4) TO BE PROVIDED BY CONTRACTOR AND TURNED OVER TO THE CITY OF SANTA FE AFTER CONSTRUCTION.

NOTES

1. SEE SHEET 6-28 FOR TEMPORARY SIGNAL SPAN DETAILS AND NOTES.
2. SEE SHEETS 6-30 AND 6-31 FOR TEMPORARY SIGNAL SPAN PLANS.
3. ALL COSTS ASSOCIATED WITH TEMPORARY SIGNAL SPANS FOR THIS PROJECT, INCLUDING INSTALLATION, REMOVAL, AND RESETTING OF CONTROLLER, CONTROLLER CABINET, RESETTING OF SIGNAL HEADS, OPTICAL DETECTORS, AND MACHINE VISION VEHICLE DETECTION SYSTEM ARE TO BE INCLUDED IN LUMP SUM BID FOR ITEM 702700 TEMPORARY SIGNAL SPAN.

PAUL F. STEFFIN NEW MEXICO 15037 REGISTERED PROFESSIONAL ENGINEER 10/6/2015

NO.	DESCRIPTION	DATE	BY
3			
2			
1			

REVISIONS (OR CHANGE NOTICES)

CITY OF SANTA FE

CERRILLOS ROAD PHASE IIC
CAMINO CARLOS REY TO
LLANO STREET
SANTA FE COUNTY

TEMPORARY SIGNAL SPAN
ESTIMATED QUANTITIES

SCALE N.T.S.

DESIGNED BY: PB	DRAWN BY: PB	CHECKED BY: JB
DATE: 08/07/15	DATE: 08/07/15	DATE: 08/07/15

J:\33693 Cerrillos Ph IIC\04 Engineering-33693\Plans\6_Sheets\Temp Signal\02_AUG02-NM-TSGQN.dwg Sep 30, 2015 - 2:44pm Saved By: chavezdx

N.M. PROJECT NO. CN S100130 SHEET NO. 6-29

PARSONS BRINCKERHOFF

CITY OF SANTA FE	SHEET
NEW MEXICO PROJECT NO.	NO.
CN S100130	6-30

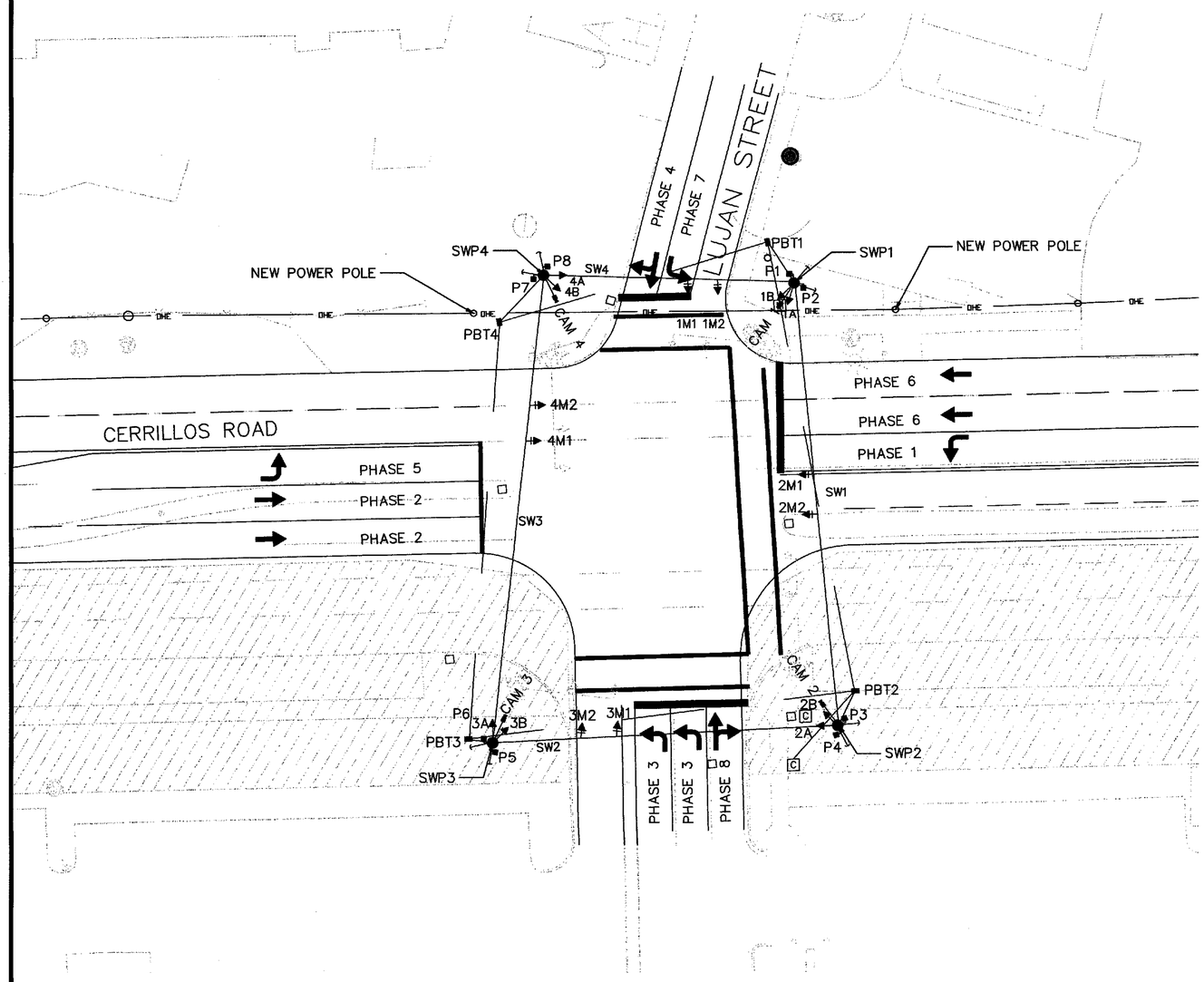

TYPICAL SIGNAL FACE LENS ARRANGEMENTS

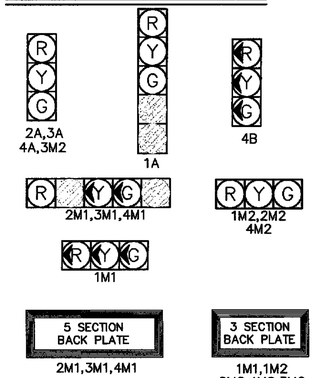

SIGNAL PHASING

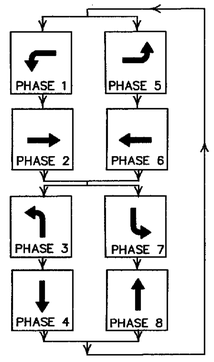

LEGEND

WORK ZONE

BLACKED OUT SIGNAL HEAD

GENERAL TEMPORARY SIGNAL SPAN NOTES

1) SEE SHEET 6-28 FOR TEMPORARY SIGNAL SPAN DETAILS AND NOTES.

2) SEE SHEET 6-29 FOR TEMPORARY SIGNAL SPAN ESTIMATED MATERIALS LIST.

3) THE POWER SERVICE FOR THIS TEMPORARY SIGNAL SPAN INCLUDING THE SERVICE RISER (SIGNAL), METER PEDESTAL (SIGNAL), AND SERVICE CONDUIT RUNS SHALL BE MEASURED AND PAID FOR ONE TIME AS PERMANENT SIGNAL EQUIPMENT. SEE PERMANENT SIGNAL INSTALLATION FOR LOCATION (SECTION 9).

4) THE CONTROL CABINET FOR THIS TEMPORARY SIGNAL SPAN SHALL BE MEASURED AND PAID FOR ONE TIME AS PERMANENT SIGNAL EQUIPMENT. SEE PERMANENT SIGNAL INSTALLATION FOR LOCATION (SECTION 9).

5) A MACHINE VISION VEHICLE DETECTION SYSTEM SHALL BE PROCURED BY THE CONTRACTOR AND THE CITY OF SANTA FE SIGNAL SHOP (PER SHEET 6-29) INCLUDING THE NECESSARY COAXIAL AND VIDEO CABLE FOR THE SYSTEM. THE SYSTEM SHALL BE INSTALLED BY THE CONTRACTOR WITH ON-SITE FACTORY REPRESENTATIVE ASSISTANCE, TO OPERATE THE VEHICLE DETECTION AT THIS TEMPORARY SIGNAL SPAN LOCATION. THE SYSTEM TRAINING, TRAFFIC ENGINEERING, AND ADJUSTMENT OF SIGNAL TIMING SHALL BE FURNISHED SIMULTANEOUSLY WITH SIGNAL TURN-ON. DETECTOR INPUTS FROM VIDEO CAMERA 1 SHALL BE CONNECTED TO PHASES 3 AND 8, FROM VIDEO CAMERA 2 TO PHASES 2 AND 5, FROM VIDEO CAMERA 3 TO PHASES 4 AND 7, AND FROM CAMERA 4 TO PHASES 1 AND 6. VIDEO CAMERAS, VIDEO COAXIAL CABLE, AND VIDEO POWER CABLE SHALL BE REPOSITIONED IF REQUIRED TO PROVIDE BETTER FIELD OF VIEW FOR EACH PHASE OF CONSTRUCTION. THE COST OF INSTALLING AND ADJUSTING THE MACHINE VISION DETECTION SYSTEM SHALL BE CONSIDERED AS INCIDENTAL TO THE TEMPORARY SIGNAL SPAN.

6) THE EXISTING TRAFFIC SIGNAL HEADS, BACKPLATES, PEDESTRIAN SIGNALS AND PEDESTRIAN PUSH BUTTON STATIONS SHALL BE SALVAGED FROM THE EXISTING SIGNALIZED INTERSECTION AND INSTALLED BY THE CONTRACTOR FOR THE TEMPORARY SIGNAL. THE COST OF SALVAGING, INSTALLING AND ADJUSTING THESE DEVICES SHALL BE CONSIDERED AS INCIDENTAL TO THE TEMPORARY SIGNAL SPAN.

LUJAN ST. TEMPORARY SIGNAL SPAN NOTES

1) THE CONTRACTOR SHALL COORDINATE WITH THE CITY OF SANTA FE PROJECT MANAGER FOR ALL TEMPORARY SIGNAL EQUIPMENT LOCATIONS.

2) THE CONTRACTOR SHALL RELOCATE SIGNAL HEADS AS REQUIRED BASED ON THE CONSTRUCTION PHASE LAYOUT. THE RELOCATION OF THESE SIGNAL HEADS SHALL BE CONSIDERED AS INCIDENTAL TO THE TEMPORARY SIGNAL SPAN.

3) THE CONTRACTOR SHALL MAINTAIN TWO LANES IN EACH DIRECTION AT THE INTERSECTION AT ALL TIMES.

4) ALL LEFT TURN PHASING SHALL BE PROTECTED ONLY, UNLESS OTHERWISE DIRECTED BY THE PROJECT MANAGER. ALL 5 SECTION TRAFFIC SIGNAL HEADS SHALL BE MODIFIED ACCORDINGLY.

NOTE:

DRAWING IS SCHEMATIC, THE INTENT OF THIS DRAWING IS TO INFORM THE CONTRACTOR OF THE TYPE AND APPROXIMATE LOCATION OF TEMPORARY SIGNAL EQUIPMENT NEEDED FOR THE PROJECT. CONTRACTOR SHALL INSTALL REQUIRED EQUIPMENT BASED ON DETAILED INTERSECTION TRAFFIC CONTROL PLANS TO BE PREPARED BY THE CONTRACTOR.

NO.	DESCRIPTION	DATE	BY
3			
2			
1			

REVISIONS (OR CHANGE NOTICES)

PAUL F. STEFFEN NEW MEXICO 10787 REGISTERED PROFESSIONAL ENGINEER 10/26/15

CITY OF SANTA FE

CERRILLOS ROAD PHASE IIC
CAMINO CARLOS REY TO
LLANO STREET
SANTA FE COUNTY

TEMPORARY SIGNAL SPAN
LUJAN STREET

SCALE
1:20

DESIGNED BY: PB	DRAWN BY: PB	CHECKED BY: JB
DATE: 08/07/15	DATE: 08/07/15	DATE: 08/07/15

J:\33693 Cerrillos Ph IIC\04 Engineering-33693\Plans\6_Sheets\Temp Signal\03_TEMP SIGNAL SPAN.DWG Sep 30, 2015 - 2:45pm Saved By: chavezdx

N.M. PROJECT NO. CN S100130 SHEET NO. 6-30

PARSONS BRINCKERHOFF

CITY OF SANTA FE	SHEET
NEW MEXICO PROJECT NO.	NO.
CN S100130	6–31

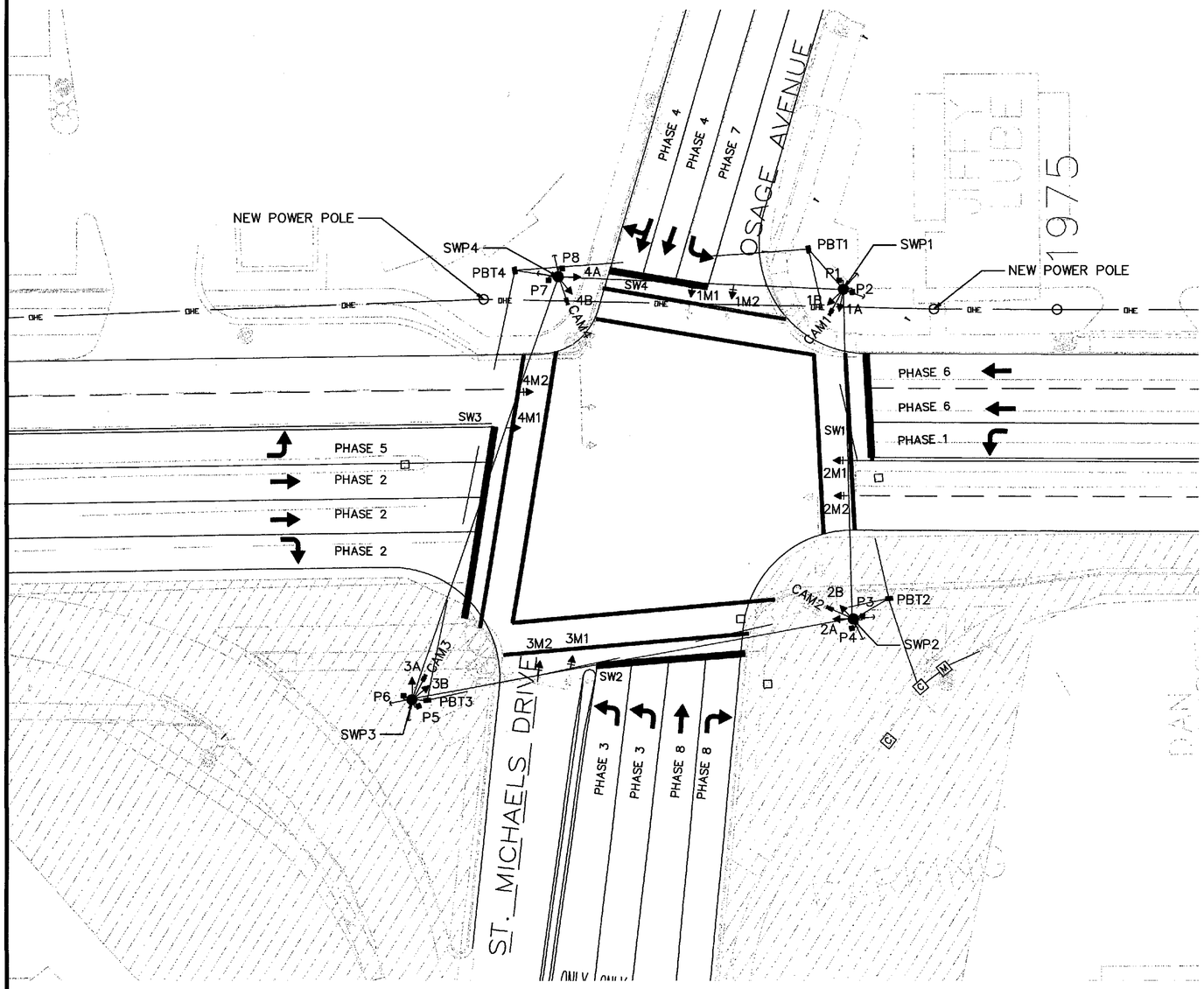

TYPICAL SIGNAL FACE LENS ARRANGEMENTS

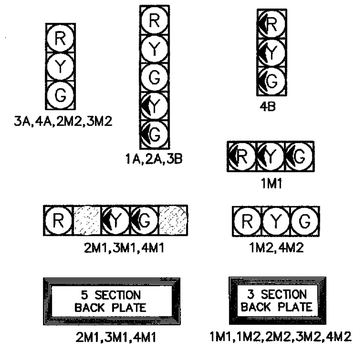

SIGNAL PHASING

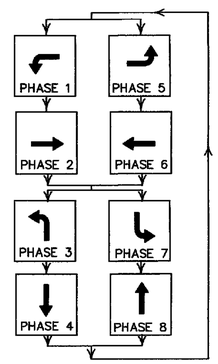

LEGEND

WORK ZONE

BLACKED OUT SIGNAL HEAD

GENERAL TEMPORARY SIGNAL SPAN NOTES

1) SEE SHEET 6–28 FOR TEMPORARY SIGNAL SPAN DETAILS AND NOTES.

2) SEE SHEET 6–29 FOR TEMPORARY SIGNAL SPAN ESTIMATED MATERIALS LIST.

3) THE POWER SERVICE FOR THIS TEMPORARY SIGNAL SPAN INCLUDING THE SERVICE RISER (SIGNAL), METER PEDESTAL (SIGNAL), AND SERVICE CONDUIT RUNS SHALL BE MEASURED AND PAID FOR ONE TIME AS PERMANENT SIGNAL EQUIPMENT. SEE PERMANENT SIGNAL INSTALLATION FOR LOCATION (SECTION 9).

4) THE CONTROL CABINET FOR THIS TEMPORARY SIGNAL SPAN SHALL BE MEASURED AND PAID FOR ONE TIME AS PERMANENT SIGNAL EQUIPMENT. SEE PERMANENT SIGNAL INSTALLATION FOR LOCATION (SECTION 9).

5) A MACHINE VISION VEHICLE DETECTION SYSTEM SHALL BE PROCURED BY THE CONTRACTOR AND THE CITY OF SANTA FE SIGNAL SHOP (PER SHEET 6–29) INCLUDING THE NECESSARY COAXIAL AND VIDEO CABLE FOR THE SYSTEM. THE SYSTEM SHALL BE INSTALLED BY THE CONTRACTOR WITH ON–SITE FACTORY REPRESENTATIVE ASSISTANCE, TO OPERATE THE VEHICLE DETECTION AT THIS TEMPORARY SIGNAL SPAN LOCATION. THE SYSTEM TRAINING, TRAFFIC ENGINEERING, AND ADJUSTMENT OF SIGNAL TIMING SHALL BE FURNISHED SIMULTANEOUSLY WITH SIGNAL TURN–ON. DETECTOR INPUTS FROM VIDEO CAMERA 1 SHALL BE CONNECTED TO PHASES 3 AND 8, FROM VIDEO CAMERA 2 TO PHASES 2 AND 5, FROM VIDEO CAMERA 3 TO PHASES 4 AND 7, AND FROM CAMERA 4 TO PHASES 1 AND 6. VIDEO CAMERAS, VIDEO COAXIAL CABLE, AND VIDEO POWER CABLE SHALL BE REPOSITIONED IF REQUIRED TO PROVIDE BETTER FIELD OF VIEW FOR EACH PHASE OF CONSTRUCTION. THE COST OF INSTALLING AND ADJUSTING THE MACHINE VISION DETECTION SYSTEM SHALL BE CONSIDERED AS INCIDENTAL TO THE TEMPORARY SIGNAL SPAN.

6) THE EXISTING TRAFFIC SIGNAL HEADS, BACKPLATES, PEDESTRIAN SIGNALS AND PEDESTRIAN PUSH BUTTON STATIONS SHALL BE SALVAGED FROM THE EXISTING SIGNALIZED INTERSECTION AND INSTALLED BY THE CONTRACTOR FOR THE TEMPORARY SIGNAL. THE COST OF SALVAGING, INSTALLING AND ADJUSTING THESE DEVICES SHALL BE CONSIDERED AS INCIDENTAL TO THE TEMPORARY SIGNAL SPAN.

OSAGE AVE. /ST. MICHAEL'S DR. TEMPORARY SIGNAL NOTES

1) THE CONTRACTOR SHALL COORDINATE WITH THE CITY OF SANTA FE PROJECT MANAGER FOR ALL TEMPORARY SIGNAL EQUIPMENT LOCATIONS.

2) THE CONTRACTOR SHALL RELOCATE SIGNAL HEADS AS REQUIRED BASED ON THE CONSTRUCTION PHASE LAYOUT. THE RELOCATION OF THESE SIGNAL HEADS SHALL BE CONSIDERED AS INCIDENTAL TO THE TEMPORARY SIGNAL SPAN.

3) THE CONTRACTOR SHALL MAINTAIN TWO THROUGH LANES ON CERRILLOS ROAD, IN ADDITION TO NORTHBOUND LEFT TURN LANES.

4) ALL LEFT TURN PHASING SHALL BE PROTECTED ONLY, UNLESS OTHERWISE DIRECTED BY THE PROJECT MANAGER. ALL 5 SECTION TRAFFIC SIGNAL HEADS SHALL BE MODIFIED ACCORDINGLY.

NOTE:

DRAWING IS SCHEMATIC, THE INTENT OF THIS DRAWING IS TO INFORM THE CONTRACTOR OF THE TYPE AND APPROXIMATE LOCATION OF TEMPORARY SIGNAL EQUIPMENT NEEDED FOR THE PROJECT. CONTRACTOR SHALL INSTALL REQUIRED EQUIPMENT BASED ON DETAILED INTERSECTION TRAFFIC CONTROL PLANS TO BE PREPARED BY THE CONTRACTOR.

NO.	DESCRIPTION	DATE	BY
3			
2			
1			

REVISIONS (OR CHANGE NOTICES)

PAUL F. STEFFIN — NEW MEXICO — 15652 — REGISTERED PROFESSIONAL ENGINEER — 10/6/2015

CITY OF SANTA FE

CERRILLOS ROAD PHASE IIC
CAMINO CARLOS REY TO
LLANO STREET
SANTA FE COUNTY

TEMPORARY SIGNAL SPAN
OSAGE AVE. / ST. MICHAEL'S DR.

SCALE 1:20

DESIGNED BY: PB	DRAWN BY: PB	CHECKED BY: JB
DATE: 08/07/15	DATE: 08/07/15	DATE: 08/07/15

J:\33693 Cerrillos Ph IIC\04 Engineering–33693\Plans\6_Sheets\Temp Signal\03_TEMP SIGNAL SPAN.DWG Oct 06, 2015 – 9:30am Saved By: chavezdx

N.M. PROJECT NO. CN S100130 SHEET NO. 6–31

PARSONS BRINCKERHOFF

CITY OF SANTA FE	SHEET
NEW MEXICO PROJECT NO.	NO.
CN S100130	7–1

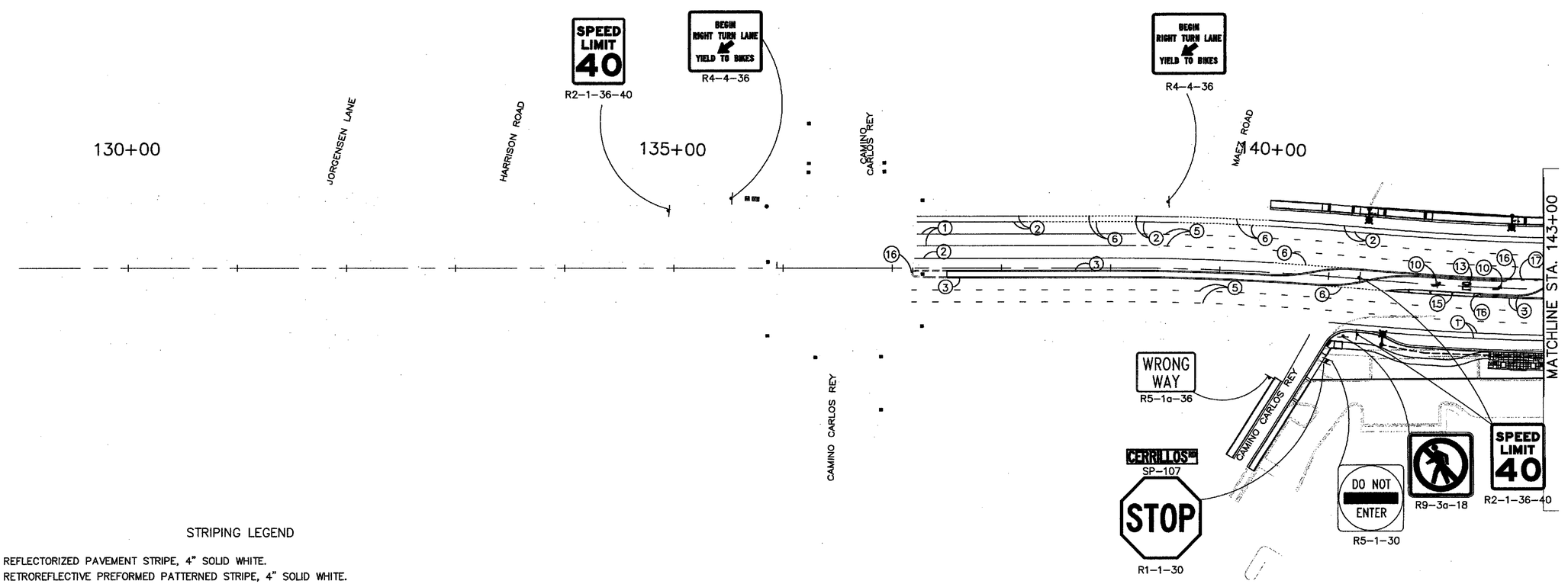

STRIPING LEGEND

① REFLECTORIZED PAVEMENT STRIPE, 4" SOLID WHITE.
② RETROREFLECTIVE PREFORMED PATTERNED STRIPE, 4" SOLID WHITE.
③ REFLECTORIZED PAVEMENT STRIPE, 4" SOLID YELLOW.
④ REFLECTORIZED PAVEMENT STRIPE, 4" SOLID DOUBLE YELLOW.
⑤ REFLECTORIZED PAVEMENT STRIPE, 4" DASHED WHITE (10' STRIPE, 30' SKIP)
⑥ REFLECTORIZED PAVEMENT STRIPE, 4" DOTTED WHITE (2' STRIPE, 4' SKIP)
⑦ REFLECTORIZED PAVEMENT STRIPE, 4" DOTTED YELLOW (2' STRIPE, 4' SKIP)
⑧ RETROREFLECTIVE PREFORMED PATTERNED PAVEMENT STRIPE, 12" SOLID WHITE (SEE DETAIL SHEET 7–6)
⑨ RETROREFLECTIVE PREFORMED PATTERNED PAVEMENT STRIPE, 24" SOLID WHITE
⑩ RETROREFLECTIVE PREFORMED PATTERNED PAVEMENT MARKING, LEFT ARROW
⑪ RETROREFLECTIVE PREFORMED PATTERNED PAVEMENT MARKING, THRU–RIGHT ARROW
⑫ RETROREFLECTIVE PREFORMED PATTERNED PAVEMENT MARKING, RIGHT ARROW
⑬ RETROREFLECTIVE PREFORMED PATTERNED PAVEMENT MARKING, WORD "ONLY"
⑭ BICYCLE LANE MARKING, SEE DETAIL ON SHEET 7–6
⑮ CHEVRON STRIPING (SEE DETAIL SHEET 7–6)
⑯ PAINT CURB NOSE YELLOW (2 APPLICATIONS), 10' FROM PC
⑰ REFLECTORIZED PAVEMENT STRIPE, 4" SOLID YELLOW AND 4" DOTTED YELLOW (2' STRIPE, 4' SKIP)

JAMES H. BUCKMAN NEW MEXICO 13062 REGISTERED PROFESSIONAL ENGINEER 8/3/15

NO.	DESCRIPTION	DATE	BY
3			
2			
1			

REVISIONS (OR CHANGE NOTICES)

SCALE
HORIZ. 1"=50'

DESIGNED BY: PB	DRAWN BY: PB	CHECKED BY: JB
DATE: 08/07/15	DATE: 08/07/15	DATE: 08/07/15

CITY OF SANTA FE

CERRILLOS ROAD PHASE IIC
CAMINO CARLOS REY TO
LLANO STREET
SANTA FE COUNTY

PERMANENT SIGNING AND
STRIPING PLAN

J:\33693 Cerrillos Ph IIC\04 Engineering–33693\Plans\7_Sheets\PERMSIGN_01.dwg Oct 07, 2015 – 8:17am Saved By: millernz

N.M. PROJECT NO. CN S100130 SHEET NO. 7–1

PARSONS BRINCKERHOFF

CITY OF SANTA FE	SHEET
NEW MEXICO PROJECT NO.	NO.
CN S100130	7-2

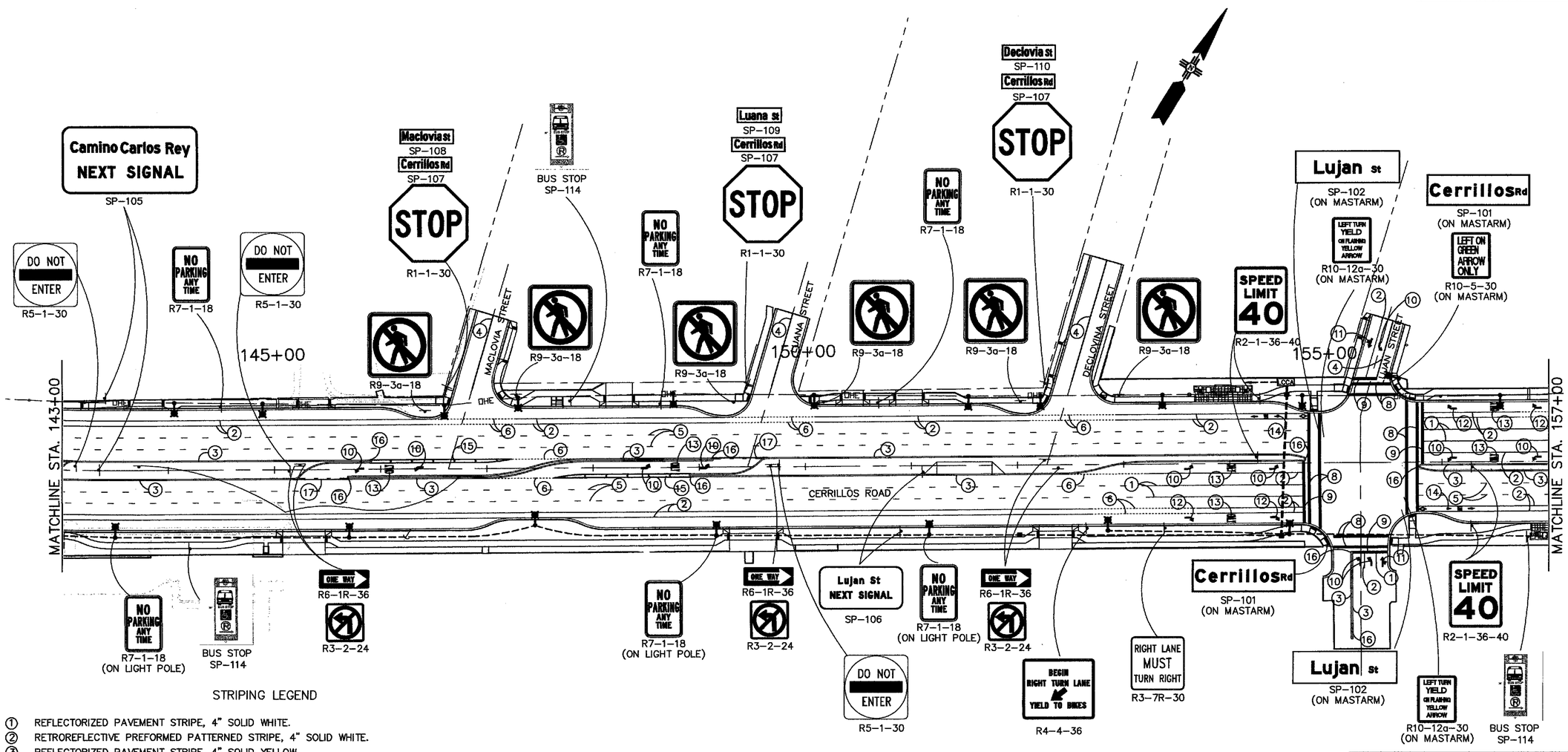

STRIPING LEGEND

① REFLECTORIZED PAVEMENT STRIPE, 4" SOLID WHITE.
② RETROREFLECTIVE PREFORMED PATTERNED STRIPE, 4" SOLID WHITE.
③ REFLECTORIZED PAVEMENT STRIPE, 4" SOLID YELLOW.
④ REFLECTORIZED PAVEMENT STRIPE, 4" SOLID DOUBLE YELLOW.
⑤ REFLECTORIZED PAVEMENT STRIPE, 4" DASHED WHITE (10' STRIPE, 30' SKIP)
⑥ REFLECTORIZED PAVEMENT STRIPE, 4" DOTTED WHITE (2' STRIPE, 4' SKIP)
⑦ REFLECTORIZED PAVEMENT STRIPE, 4" DOTTED YELLOW (2' STRIPE, 4' SKIP)
⑧ RETROREFLECTIVE PREFORMED PATTERNED PAVEMENT STRIPE, 12" SOLID WHITE (SEE DETAIL SHEET 7-6)
⑨ RETROREFLECTIVE PREFORMED PATTERNED PAVEMENT STRIPE, 24" SOLID WHITE
⑩ RETROREFLECTIVE PREFORMED PATTERNED PAVEMENT MARKING, LEFT ARROW
⑪ RETROREFLECTIVE PREFORMED PATTERNED PAVEMENT MARKING, THRU-RIGHT ARROW
⑫ RETROREFLECTIVE PREFORMED PATTERNED PAVEMENT MARKING, RIGHT ARROW
⑬ RETROREFLECTIVE PREFORMED PATTERNED PAVEMENT MARKING, WORD "ONLY"
⑭ BICYCLE LANE MARKING, SEE DETAIL ON SHEET 7-6
⑮ CHEVRON STRIPING (SEE DETAIL SHEET 7-6)
⑯ PAINT CURB NOSE YELLOW (2 APPLICATIONS), 10' FROM PC
⑰ REFLECTORIZED PAVEMENT STRIPE, 4" SOLID YELLOW AND 4" DOTTED YELLOW (2' STRIPE, 4' SKIP)

NO.	DESCRIPTION	DATE	BY
3			
2			
1			

REVISIONS (OR CHANGE NOTICES)

JAMES H. BUCKMAN NEW MEXICO 13082 REGISTERED PROFESSIONAL ENGINEER 12/7/15

CITY OF SANTA FE

CERRILLOS ROAD PHASE IIC
CAMINO CARLOS REY TO
LLANO STREET
SANTA FE COUNTY

PERMANENT SIGNING AND
STRIPING PLAN

SCALE
HORIZ. 1"=50'

DESIGNED BY: PB	DRAWN BY: PB	CHECKED BY: JB
DATE: 08/07/15	DATE: 08/07/15	DATE: 08/07/15

J:\33693 Cerrillos Ph IIC\04 Engineering-33693\Plans\7_Sheets\PERMSIGN_02.dwg Oct 07, 2015 - 8:19am Saved By: chavezdx

N.M. PROJECT NO. CN S100130 SHEET NO. 7-2

PARSONS BRINCKERHOFF

CITY OF SANTA FE	SHEET
NEW MEXICO PROJECT NO.	NO.
CN S100130	7-3

MATCHLINE STA. 157+00

160+00 165+00 170+00

VITALIA STREET APACHE AVENUE OSAGE AVENUE CHAMA AVENUE LLANO STREET ST. MICHAELS DRIVE CHAMISA STREET

RIGHT LANE MUST TURN RIGHT R3-7R-30

BEGIN RIGHT TURN LANE YIELD TO BIKES R4-4-36

Vitalia St SP-111
Cerrillos Rd SP-107
STOP R1-1-30

BUS STOP SP-114

Lujan St NEXT SIGNAL SP-106

Apache Ave SP-112
Cerrillos Rd SP-107
STOP R1-1-30

Cerrillos Rd SP-107
STOP R1-1-30

M1-NM-5-24-14

BIKE LANE R3-17-30
AHEAD R3-17a-30

← St Michaels Dr
Osage Ave → SP-103 (ON MASTARM)

SPEED LIMIT 35 R2-1-36-35

SP-119

Cerrillos Rd SP-101 (ON MASTARM)

LEFT ON GREEN ARROW ONLY R10-5-30 (ON MASTARM)

Cerrillos Rd SP-107
STOP R1-1-30

R9-3a-18 (×5)

NO PARKING ANY TIME R7-1-18

DO NOT ENTER R5-1-30

ONE WAY R6-1R-36

R3-2-24

NO PARKING ANY TIME R7-1-18 (ON LIGHT POLE)

DO NOT ENTER R5-1-30

ONE WAY R6-1R-36

R3-2-24

NO PARKING ANY TIME R7-1-18 (ON LIGHT POLE)

ONE WAY R6-1R-36

R3-2-24

RIGHT LANE MUST TURN RIGHT R3-7R-30

St. John's College
Santa Fe University →
Santa Fe Art Institute →
SP-116

NEXT SIGNAL
OSAGE AVE ←
ST MICHAELS DR →
SP-113

M1-NM-5-24-14

W11-2-36

W16-7PR-24 W16-7PL-24

RIGHT LANE MUST TURN RIGHT R3-7R-30

W11-2-36

W4-3-36

Cerrillos Rd SP-101 (ON MASTARM)

M1-NM-5-30-466

SP-118

EXISTING SIGNS AND SIGN POST TO REMAIN.

PC = 5+60.05

← Osage Ave
St Michaels Dr → SP-104 (ON MASTARM)

RIGHT LANE MUST TURN RIGHT R3-7R-30

LEFT TURN YIELD ON FLASHING YELLOW ARROW R10-12A-30 (ON MASTARM)

SPEED LIMIT 35 R2-1-36-35

ONE WAY R6-1R-36

R3-2-24

Chamisa St SP-115
St Michaels Dr SP-120

R9-3a-18

M1-NM-5-24-14

R6-1R-36

R3-2-24

M6-4-21

STOP R1-1-30

TO ALBUQUERQUE
SP-117
(MOUNT ON NEW SIGN STRUCTURE, WITH NEW FOUNDATION)

REMOVE EXISTING SIGN STRUCTURE AND FOUNDATION.

Pinon St SP-121
St Michaels Dr SP-120

ONE WAY R6-1R-36

R3-2-24

STOP R1-1-30

STRIPING LEGEND

1. REFLECTORIZED PAVEMENT STRIPE, 4" SOLID WHITE.
2. RETROREFLECTIVE PREFORMED PATTERNED STRIPE, 4" SOLID WHITE.
3. REFLECTORIZED PAVEMENT STRIPE, 4" SOLID YELLOW.
4. REFLECTORIZED PAVEMENT STRIPE, 4" SOLID DOUBLE YELLOW.
5. REFLECTORIZED PAVEMENT STRIPE, 4" DASHED WHITE (10' STRIPE, 30' SKIP)
6. REFLECTORIZED PAVEMENT STRIPE, 4" DOTTED WHITE (2' STRIPE, 4' SKIP)
7. REFLECTORIZED PAVEMENT STRIPE, 4" DOTTED YELLOW (2' STRIPE, 4' SKIP)
8. RETROREFLECTIVE PREFORMED PATTERNED PAVEMENT STRIPE, 12" SOLID WHITE (SEE DETAIL SHEET 7-6)
9. RETROREFLECTIVE PREFORMED PATTERNED PAVEMENT STRIPE, 24" SOLID WHITE
10. RETROREFLECTIVE PREFORMED PATTERNED PAVEMENT MARKING, LEFT ARROW
11. RETROREFLECTIVE PREFORMED PATTERNED PAVEMENT MARKING, THRU-RIGHT ARROW
12. RETROREFLECTIVE PREFORMED PATTERNED PAVEMENT MARKING, RIGHT ARROW
13. RETROREFLECTIVE PREFORMED PATTERNED PAVEMENT MARKING, WORD "ONLY"
14. BICYCLE LANE MARKING, SEE DETAIL ON SHEET 7-6
15. CHEVRON STRIPING (SEE DETAIL SHEET 7-6)
16. PAINT CURB NOSE YELLOW (2 APPLICATIONS), 10' FROM PC
17. REFLECTORIZED PAVEMENT STRIPE, 4" SOLID YELLOW AND 4" DOTTED YELLOW (2' STRIPE, 4' SKIP)

JAMES H. BUCKMAN NEW MEXICO 13062 REGISTERED PROFESSIONAL ENGINEER 10/9/15

NO.	DESCRIPTION	DATE	BY
3			
2			
1			

REVISIONS (OR CHANGE NOTICES)

CITY OF SANTA FE

CERRILLOS ROAD PHASE IIC
CAMINO CARLOS REY TO
LLANO STREET
SANTA FE COUNTY

PERMANENT SIGNING AND STRIPING PLAN

SCALE HORIZ. 1"=50'

DESIGNED BY: PB	DRAWN BY: PB	CHECKED BY: JB
DATE: 08/07/15	DATE: 08/07/15	DATE: 08/07/15

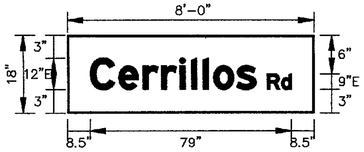

*SP-101
W/G, 96" x 30"

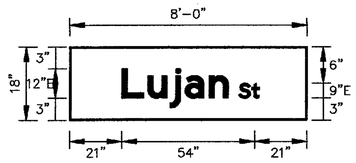

*SP-102
W/G, 96" x 30"

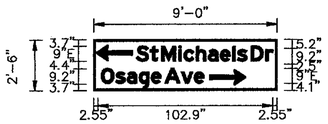

*SP-103
W/G, 108" x 30"

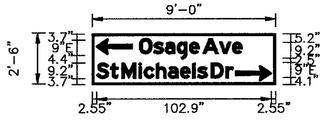

*SP-104
W/G, 108" x 30"

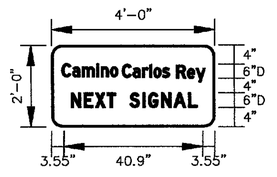

SP-105
W/G, 48" x 24"

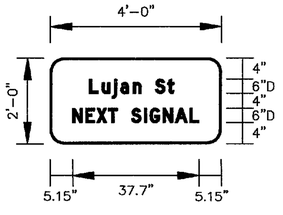

SP-106
W/G, 48" x 24"

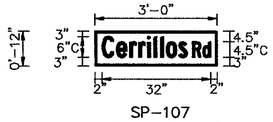

SP-107
W/G, 36" x 12"

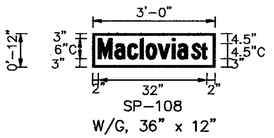

SP-108
W/G, 36" x 12"

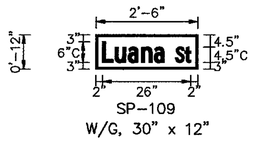

SP-109
W/G, 30" x 12"

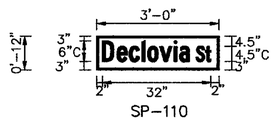

SP-110
W/G, 36" x 12"

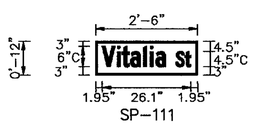

SP-111
W/G, 30" x 12"

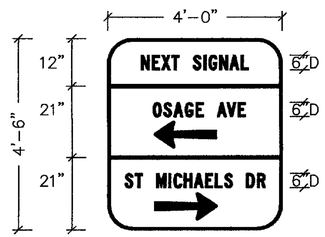

SP-113
W/G, 48" x 54"

*NOTE: SEE SECTION 9 FOR ADDITIONAL DETAILS REGARDING INTERNALLY ILLUMINATED SIGNS. INTERNALLY ILLUMINATED SIGNS WILL BE PAID FOR UNDER ITEM NO. 716301.

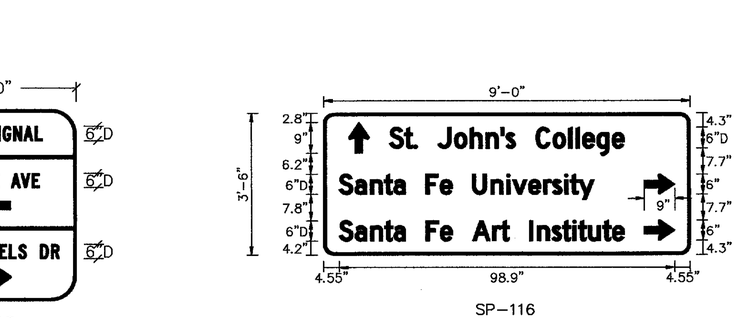

SP-116
W/G, 108" x 42"

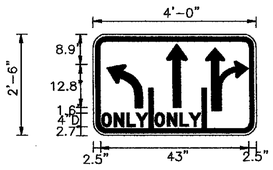

SP-119
B/W, 48" x 30"

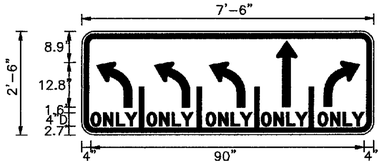

SP-118
B/W, 90" x 30"

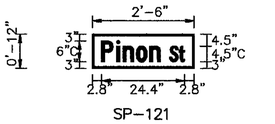

SP-121
W/G, 30" x 12"

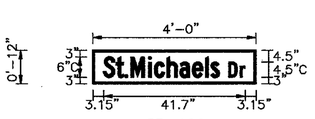

SP-120
W/G, 48" x 12"

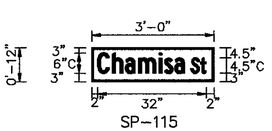

SP-115
W/G, 36" x 12"

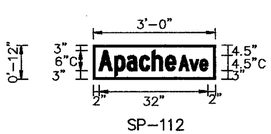

SP-112
W/G, 36" x 12"

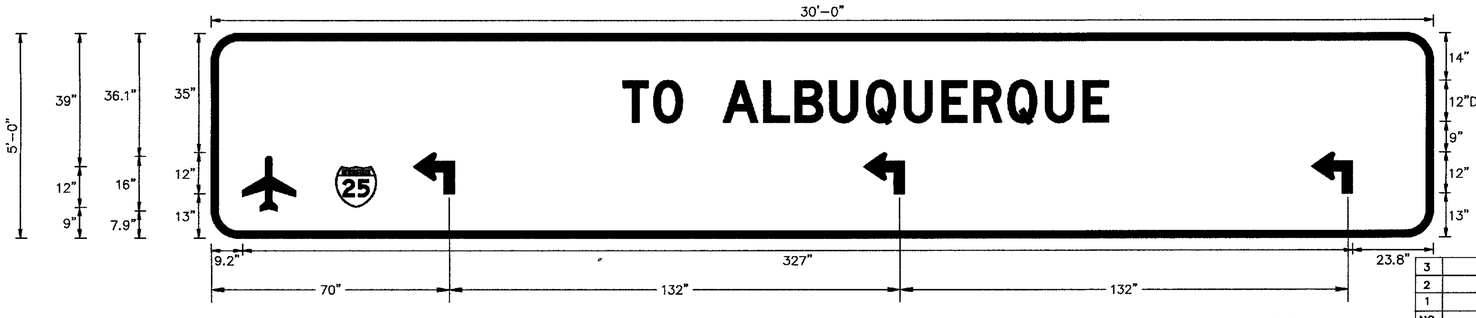

SP-117**
W/G, 360" x 60"

**NOTE: EXTRUDED PANEL SIGN. SIGN WILL BE PAID FOR UNDER ITEM NO. 701010.

JAMES H. BUCKMAN NEW MEXICO 13062 REGISTERED PROFESSIONAL ENGINEER 1/7/15

NO.	DESCRIPTION	DATE	BY
3			
2			
1			

REVISIONS (OR CHANGE NOTICES)

CITY OF SANTA FE

CERRILLOS ROAD PHASE IIC
CAMINO CARLOS REY TO
LLANO STREET
SANTA FE COUNTY

PERMANENT SIGNING
DETAILS

SCALE
NOT TO SCALE

DESIGNED BY: PB	DRAWN BY: PB	CHECKED BY: JB
DATE: 08/07/15	DATE: 08/07/15	DATE: 08/07/15

PARSONS BRINCKERHOFF

CITY OF SANTA FE	SHEET
NEW MEXICO PROJECT NO.	NO.
CN S100130	7–5

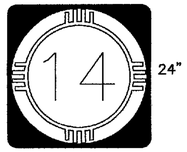

M1–NM–5–24–14
R–B/W, 24" x 24"

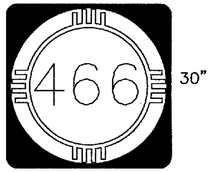

M1–NM–5–30–466
R–B/W, 30" x 30"

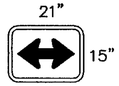

M6–4–21
B/W, 21" x 15"

R1–1–30
W/R, 30" x 30"

R2–1–36–35
B/W, 36" x 48"

R2–1–36–40
B/W, 36" x 48"

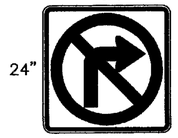

R3–1–24
R–B/W, 24" x 24"

R3–2–24
R–B/W, 24" x 24"

R3–7R–30
B/W, 30" x 30"

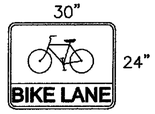

R3–17–30
B/W, 30" x 24"

R3–17a–30
B/W, 30" x 12"

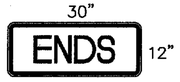

R3–17b–30
B/W, 30" x 12"

R4–4–36
B/W, 36" x 30"
W/R, 30" x 30"

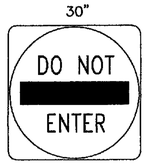

R5–1–30

R5–1a–36

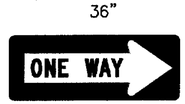

R6–1R–36
B/W, 36" x 12"

R7–1–18
R/W, 18" x 24"

* R9–3a–18
R–B/W, 18" x 18"

R10–5–30
B/W, 24" x 30"
(ON MASTARM)

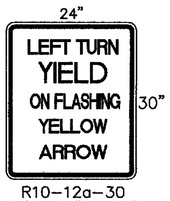

R10–12a–30
B/W, 24" x 30"
(ON MASTARM)

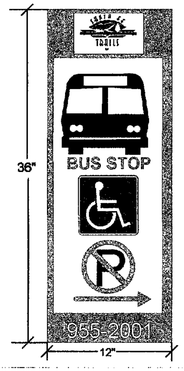

SP–114
12" x 36"

W11–2–36
B/FYG, 36" x 36"

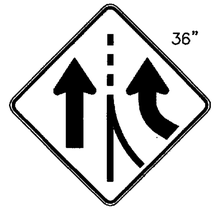

W4–3–36
B/FY, B/FO 36" x 36"

W16–7pL–24
B/FY 24" x 12"

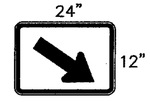

W16–7pR–24
B/FY 24" x 12"

* WHERE USED IN THE PLANS, R9–3a–18 SIGN SHALL BE MOUNTED ON A POST WITH THE BOTTOM OF THE SIGN 3' ABOVE THE GROUND SURFACE. SIGN FACE SHALL BE PARALLEL TO CERRILLOS ROAD, AND LOCATED TO INDICATE THAT CROSSING OF CERRILLOS ROAD ALONG THE ALIGNMENT OF THE SIDE STREET SIDEWALK IS PROHIBITED.

NO.	DESCRIPTION	DATE	BY
3			
2			
1			

REVISIONS (OR CHANGE NOTICES)

JAMES H. BUCKMAN NEW MEXICO 13062 REGISTERED PROFESSIONAL ENGINEER 10/7/15

CITY OF SANTA FE

CERRILLOS ROAD PHASE IIC
CAMINO CARLOS REY TO
LLANO STREET
SANTA FE COUNTY

PERMANENT SIGNING
DETAILS (CONTINUED)

SCALE
NOT TO SCALE

DESIGNED BY: PB	DRAWN BY: PB	CHECKED BY: JB
DATE: 08/07/15	DATE: 08/07/15	DATE: 08/07/15

J:\33693 Cerrillos Ph IIC\04 Engineering–33693\Plans\7_Sheets\PS–DETAILS–05.dwg Oct 07, 2015 – 9:44am Saved By: millernz

N.M. PROJECT NO. CN S100130 SHEET NO. 7–5

PARSONS BRINCKERHOFF

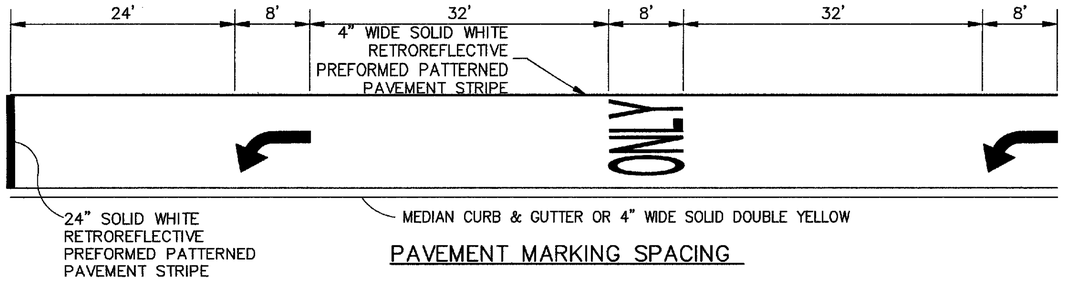

PAVEMENT MARKING SPACING

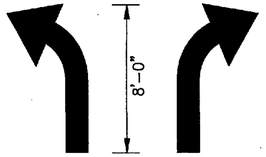

PAVEMENT MARKING LEFT AND RIGHT ARROW

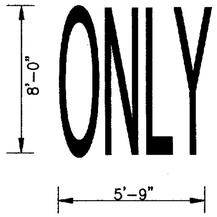

PAVEMENT MARKING (ONLY)

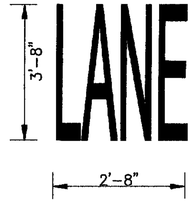

PAVEMENT MARKING (LANE) BIKEWAY

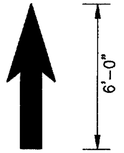

PAVEMENT MARKING THRU ARROW (BIKEWAY)

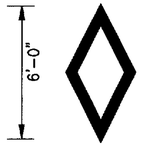

PAVEMENT MARKING DIAMOND SYMBOL (BIKEWAY)

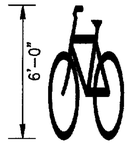

PAVEMENT MARKING BIKE SYMBOL (BIKEWAY)

PAVEMENT WORD AND SYMBOL MARKINGS

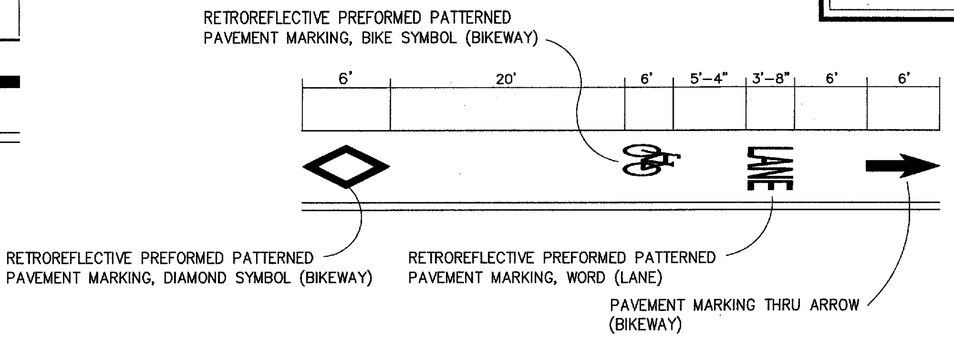

DETAIL OF BICYCLE LANE MARKING

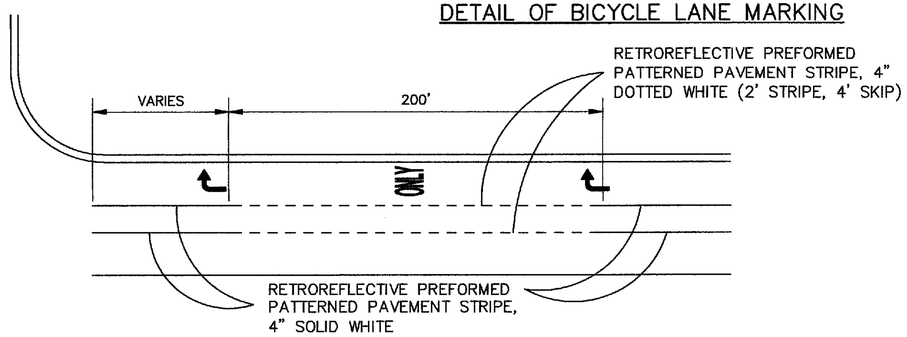

DETAIL OF BICYCLE LANE STRIPING AT INTERSECTION

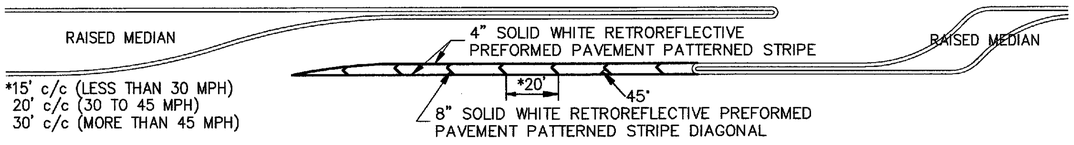

LEFT-TURN LANE CHEVRON STRIPING DETAIL

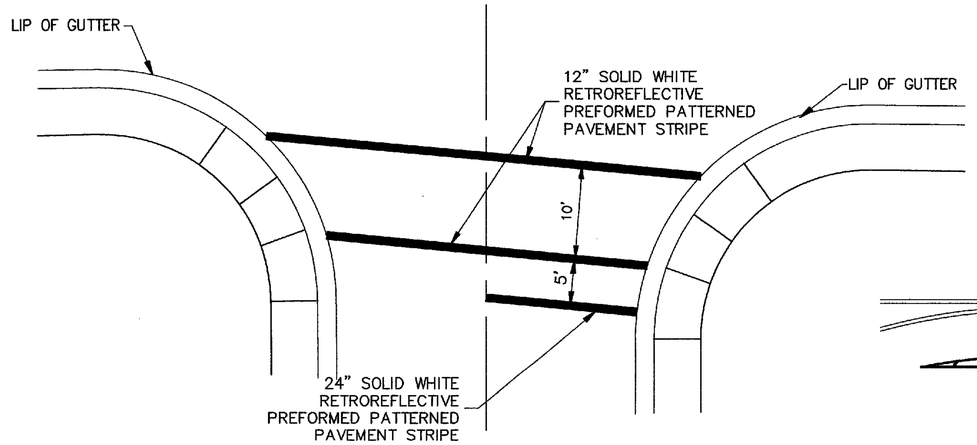

CROSSWALK AND STOP BAR PLACEMENT DETAIL

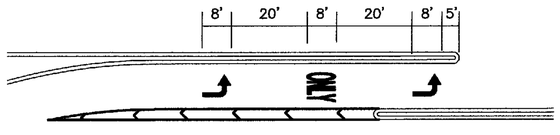

MID BLOCK LEFT TURN LANE PAVEMENT MARKING DETAIL

JAMES H. BUCKMAN NEW MEXICO 13062 REGISTERED PROFESSIONAL ENGINEER 12/7/15

NO.	DESCRIPTION	DATE	BY
3			
2			
1			

REVISIONS (OR CHANGE NOTICES)

CITY OF SANTA FE

CERRILLOS ROAD PHASE IIC
CAMINO CARLOS REY TO
LLANO STREET
SANTA FE COUNTY

STRIPING DETAILS

SCALE
NOT TO SCALE

DESIGNED BY: PB	DRAWN BY: PB	CHECKED BY: JB
DATE: 08/07/15	DATE: 08/07/15	DATE: 08/07/15

SIGN AND POST SCHEDULE									
SIGN CODE	NO. OF SIGNS	SIGN AREA (SQ. FT.)	TOTAL SIGN AREA (SQ. FT.)	POST LENGTHS				BASE POSTS	
				LEFT	CTR	RIGHT	TOTAL	NO.	TOTAL LENGTH
M1-NM-5-24-14	3	4	12		9.0		27.0	3	10.5
M1-NM-5-30-486	1	6	6		9.5		9.5	1	3.5
M6-4-21 (MOUNT WITH M1-NM-5-24-14)	1	2	2				*		*
R1-1-30	10	6	63		9.5		95.0	10	35.0
R2-1-36-35	2	12	24	11.0		11.0	44.0	4	14.0
R2-1-36-40	7	12	84	11.0		11.0	154.0	14	49.0
R3-2-24 (MOUNT WITH R6-1R-36)	13	4	52				*		*
R3-7R-30	5	6	31		9.5		47.5	5	17.5
R3-17-30	1	5	5		9.0		9.0	1	3.5
R3-17a-30 (MOUNT WITH R3-17-30)	1	3	3				*		*
R4-4-36	5	8	38		9.5		47.5	5	17.5
R5-1-30	6	6	38		9.5		57.0	6	21.0
R5-1a-36	1	6	6		9.0		9.0	1	3.5
R8-1R-36	13	3	39		8.0		104.0	13	45.5
R7-1-18	5	3	15		9.0		45.0	5	17.5
R7-1-18 (MOUNT ON LIGHT POLE)	5	3	15				**		**
R9-3a-18	15	2	34		8.5		127.5	15	52.5
R10-5-30 (MOUNT ON MASTARM)	2	5	10				***		***
R10-12a-30 (MOUNT ON MASTARM)	3	5	15				***		***
SP-101 (MOUNT ON MASTARM)	4	INTERNALLY ILLUMINATED SIGN, PAID UNDER ITEM NO. 716301 (see section 9)							
SP-102 (MOUNT ON MASTARM)	2	INTERNALLY ILLUMINATED SIGN, PAID UNDER ITEM NO. 716301 (see section 9)							
SP-103 (MOUNT ON MASTARM)	1	INTERNALLY ILLUMINATED SIGN, PAID UNDER ITEM NO. 716301 (see section 9)							
SP-104 (MOUNT ON MASTARM)	1	INTERNALLY ILLUMINATED SIGN, PAID UNDER ITEM NO. 716301 (see section 9)							
SP-105	2	8	16		9.0		18.0	2	7.0
SP-106	4	8	32		9.0		36.0	4	14.0
SP-107 (MOUNT WITH R1-1-30)	8	3	24				*		*
SP-108 (MOUNT WITH R1-1-30)	1	3	3				*		*
SP-109 (MOUNT WITH R1-1-30)	1	3	3				*		*
SP-110 (MOUNT WITH R1-1-30)	1	3	3				*		*
SP-111 (MOUNT WITH R1-1-30)	1	3	3				*		*
SP-112 (MOUNT WITH R1-1-30)	1	3	3				*		*
SP-113	1	18	18	12.0		12.0	24.0	2	7.0
SP-114	4	3	12		10.0		40.0	4	14.0
SP-115 (MOUNT WITH R1-1-30)	1	3	3				*		*
SP-116	1	32	32	10.5	10.5	10.5	31.5	3	10.5
SP-117	1	EXTRUDED PANEL SIGN, PAID UNDER ITEM NO. 701010							
SP-118	1	19	19	9.5		9.5	19.0	2	7.0
SP-119	1	10	10	9.5		9.5	19.0	2	7.0
SP-120 (MOUNT WITH R1-1-30)	2	4	8				*		*
SP-121 (MOUNT WITH R1-1-30)	1	3	3				*		*
W4-3-36	1	9	9		10.5		10.5	1	3.5
W11-2-36	3	9	27	10.5		10.5	63.0	6	21.0
W16-7pL-24 (MOUNT WITH W11-2-36)	1	2	2				*		*
W16-7pR-24 (MOUNT WITH W11-2-36)	1	2	2				*		*
PROJECT SUBTOTAL			720				1037.0		381.5
PROJECT TOTAL			730				1040		390

* NO ADDITIONAL POST NEEDED (SIGN TO BE MOUNTED ON COMMON POST WITH ANOTHER SIGN)
** NO ADDITIONAL POST NEEDED (SIGN IS TO BE MOUNTED ON LIGHT POLE)
*** NO ADDITIONAL POST NEEDED (SIGN IS TO BE MOUNTED ON MASTARM)

SUMMARY OF QUANTITIES				
ITEM NO.	BID ITEM	UNITS	BASELINE	TOTAL
502054	DRILLED SHAFT FOUNDATION 54" DIAMETER	LIN. FT.		15
540060	REINFORCING BARS GRADE 60	LBS.		1,660
701000	PANEL SIGNS	SQ. FT.		730
701010	EXTRUDED PANEL SIGNS	SQ. FT.		150
701100	STEEL/BASE POST FOR ALUMINUM PANEL SIGNS	LIN. FT.		1,430
704000	RETROREFLECTERIZED PAVEMENT STRIPE *	LIN. FT.		18,647
	4" SOLID WHITE	LIN. FT.	3,420	
	4" DASHED WHITE (10' STRIPE/30' SKIP)	LIN. FT.	4,152	
	4" DOTTED WHITE (2' STRIPE/4' SKIP)	LIN. FT.	985	
	4" DOTTED YELLOW (2' STRIPE/4' SKIP)	LIN. FT.	340	
	4" SOLID YELLOW	LIN. FT.	8,360	
	4" SOLID DOUBLE YELLOW	LIN. FT.	1,390	
704754	RETROREFLECTIVE PREFORMED PATTERNED PAVEMENT STRIPE 4"	LIN. FT.		13,187
704758	RETROREFLECTIVE PREFORMED PATTERNED PAVEMENT STRIPE 8"	LIN. FT.		57
704762	RETROREFLECTIVE PREFORMED PATTERNED PAVEMENT STRIPE 12"	LIN. FT.		1,275
704764	RETROREFLECTIVE PREFORMED PATTERNED PAVEMENT STRIPE 24"	LIN. FT.		355
704767	RETROREFLECTIVE PREFORMED PATTERNED PAVEMENT MARKING RIGHT ARROW	EACH		8
704768	RETROREFLECTIVE PREFORMED PATTERNED PAVEMENT MARKING LEFT ARROW	EACH		43
704769	RETROREFLECTIVE PREFORMED PATTERNED PAVEMENT MARKING THRU ARROW	EACH		4
704770	RETROREFLECTIVE PREFORMED PATTERNED PAVEMENT MARKING WORD (ONLY)	EACH		28
704777	RETROREFLECTIVE PREFORMED PATTERNED PAVEMENT MARKING BIKE WORD (LANE) (BIKEWAY)	EACH		2
704782	RETROREFLECTIVE PREFORMED PATTERNED PAVEMENT MARKING BIKE SYMBOL (BIKEWAY)	EACH		2
701341	OH SIGN STRUCTURE, BUTTERFLY TYPE, 24 INCH	EACH		1

* REFLECTORIZED PAVEMENT STRIPE INCLUDES 2 APPLICATIONS PER ONE UNIT IN LINEAR FEET

PARSONS BRINCKERHOFF

CITY OF SANTA FE	SHEET
NEW MEXICO PROJECT NO.	NO.
CN S100130	7-7

SIGNING NOTES:

1. ALL SIGNS, UNLESS OTHERWISE SPECIFIED, SHALL HAVE REFLECTIVITY III SHEETING FOR THE LEGEND, BORDER AND BACKGROUND. ONLY ALUMINUM PANEL SIGNS ARE PERMITTED.
2. QUANTITIES MAY VARY AS FIELD CONDITIONS DICTATE. THE CONTRACTOR WILL BE PAID FOR ACTUAL QUANTITIES USED.
3. ALL TRAFFIC CONTROL DEVICES SHALL COMPLY WITH N.M. STANDARD SPECIFICATIONS FOR HIGHWAY AND BRIDGE CONSTRUCTION (2014 EDITION) AND ANY APPLICABLE SPECIAL PROVISION AND/OR SUPPLEMENTAL SPECIFICATION, SPECIAL NOTE OF SECTIONS 701.215 AND 701.452 AND ALSO THE CURRENT EDITION, WITH REVISIONS, OF THE M.U.T.C.D.
4. EACH SIGN FACE SHOWN ON PLANS SHALL MEET THE SPECIFICATIONS IN THE STANDARD HIGHWAY SIGNS MANUAL (2003 EDITION) FOR PROPER ARRANGEMENT, SPACING OF LETTERS, LETTER HEIGHT, LETTER SERIES, SYMBOLS AND BORDERS FOR THE SPECIFIED SIZE AND MESSAGE AS SHOWN ON PLANS.
5. POST LENGTHS ARE BASED ON A MINIMUM OF 7 FT. FOR URBAN SECTIONS. THE LENGTHS ARE MEASURED FROM THE BOTTOM OF THE SIGN TO THE NEAR EDGE OF THE DRIVING LANE.
6. THE LATERAL CLEARANCE OF SIGNS SHALL BE NO CLOSER THAN 2 FT. FROM FACE OF CURB FOR URBAN AREAS
7. ALL SIGNING HARDWARE, INCLUDING BRACKETS, ARE CONSIDERED INCIDENTAL TO SIGN INSTALLATION. NO PAYMENT WILL BE MADE THEREFOR.
8. THREE 4 LB/FT SIGN POST INSTALLATION APPROVED ONLY IF THE SPAN BETWEEN THE OUTER POSTS EXCEEDS 84" (SIGN WIDTH OF 96" OR GREATER).
9. ALL SIGNS TO USE "U CHANNEL" (4 LB./FT.) POLES. SQUARE TUBING IS NOT ACCEPTABLE.
10. ALL INTERNALLY ILLUMINATED SIGNS SHALL BE FLUORESCO BRAND OR APPROVED EQUAL.
11. THE CONTRACTOR SHALL VERIFY THAT ALL SIGNING IS NOT OBSTRUCTED BY LANDSCAPING ON THIS PROJECT. IT WILL BE THE RESPONSIBILITY OF THE CONTRACTOR TO COORDINATE PLACEMENT OF ALL SIGNING WITH THE PLACEMENT OF LANDSCAPING PRIOR TO INSTALLATION OF ALL SIGNAGE.
12. ALL EXISTING SIGNS SHALL BE SALVAGED AS DIRECTED BY THE PROJECT MANAGER.

STRIPING NOTES:

1. ALL RETROREFLECTIVE PREFORMED PLASTIC PAVEMENT STRIPING SHALL BE 3M 3801-ES INTERSECTION GRADE TAPE, 60 MIL OR APPROVED EQUAL.

JAMES H. BUCKMAN NEW MEXICO 13062 10/9/15 REGISTERED PROFESSIONAL ENGINEER

NO.	DESCRIPTION	DATE	BY
3			
2			
1			

REVISIONS (OR CHANGE NOTICES)

CITY OF SANTA FE

CERRILLOS ROAD PHASE IIC
CAMINO CARLOS REY TO
LLANO STREET
SANTA FE COUNTY

PERMANENT SIGNING AND STRIPING QUANTITIES

SCALE

DESIGNED BY: PB	DRAWN BY: PB	CHECKED BY: JB
DATE: 08/07/15	DATE: 08/07/15	DATE: 08/07/15

Parametrix
ENGINEERING . PLANNING . ENVIRONMENTAL SCIENCES
8501 Jefferson NE, Building B
Albuquerque, NM 87113
P. 505.821.4700 F. 505.821.7131
www.parametrix.com

CITY OF SANTA FE	SHEET
NEW MEXICO PROJECT NO.	NO.
CN S100130	8-1

ROADWAY LIGHTING GENERAL NOTES

1. LOCATIONS OF CONDUIT, FOUNDATIONS, PULL BOXES, AND CONTROL CABINETS SHOWN ON THE PLANS ARE SCHEMATIC AND SHALL BE ADJUSTED IN THE FIELD TO AVOID UTILITIES AND TO MAXIMIZE CLEAR SPACE AVAILABLE FOR PEDESTRIANS AND WHEELCHAIRS TO COMPLY WITH THE AMERICANS WITH DISABILITIES ACT. THE CONTRACTOR SHALL MEET WITH THE PROJECT MANAGER IN THE FIELD AT ALL LOCATIONS TO SPOT EQUIPMENT BEFORE BEGINNING THE WORK. ALL SUCH EQUIPMENT SHALL BE INSTALLED WITHIN THE RIGHT-OF-WAY.
2. ALL WIRE ON THIS PROJECT TO BE COPPER ONLY.
3. LIGHT STANDARDS SHALL HAVE BREAKAWAY SYSTEMS, WHICH SHALL BE CONSIDERED INCIDENTAL TO THE STANDARD.
4. ALL ROADWAY LIGHTING CIRCUITS ON THIS PROJECT SHALL BE 240 VOLTS.
5. ALL PULL BOXES INSTALLED FOR ROADWAY LIGHTING SHALL BE STANDARD SIZE.
6. CONTRACTOR SHALL REMOVE EXISTING CONDUITS, WIRING AND PULL BOXES THROUGHOUT THE PROJECT AS DIRECTED BY PROJECT MANAGER. THIS WORK SHALL BE INCIDENTAL TO CONSTRUCTION.
7. ALL LIGHTING IMPROVEMENTS FOR THIS PROJECT SHALL CONFORM TO THE NEW MEXICO DEPARTMENT OF TRANSPORTATION'S STANDARD SPECIFICATIONS FOR HIGHWAY AND BRIDGE CONSTRUCTION, 2014 EDITION, DIVISION 700.
8. ALL ROADWAY LUMINARIES AND LIGHTING STANDARDS WHICH ARE REMOVED SHALL BE SALVAGED AND DELIVERED TO THE CITY OF SANTA FE MAINTENANCE YARD ON 1142 SILER ROAD BY THE CONTRACTOR.
9. EACH TIME A ROADWAY LUMINAIRE IS TURNED ON OR OFF THE CONTRACTOR SHALL COORDINATE WITH THE FOLLOWING:
   - PUBLIC SERVICE COMPANY OF NEW MEXICO (PNM)
   - CITY OF SANTA FE

   POWER SHALL NEITHER BE TURNED ON NOR OFF UNTIL THE RESPONSIBLE PARTIES FOR EACH LIGHTING SYSTEM HAVE BEEN NOTIFIED.
10. RESPONSIBILITY AND MAINTENANCE OF THE LIGHTING SYSTEMS INSTALLED AS PART OF THIS PROJECT SHALL BE AS FOLLOWS:
    A. ROADWAY LIGHTING SHALL BE ACCEPTED AND MAINTAINED BY THE CITY OF SANTA FE. THE CONTRACTOR SHALL PROVIDE THE CITY OF SANTA FE FIVE (5) WORKING DAYS' NOTICE IN ADVANCE OF TURNING ON THE SYSTEM TO ALLOW THE CITY AND PNM TIME TO INSPECT AND APPROVE THE SYSTEM BEFORE IT IS TURNED ON.
    B. THE CONTRACTOR SHALL BE RESPONSIBLE FOR MAINTENANCE AND COST OF ENERGIZING ALL LIGHTING SYSTEM COMPONENTS UNTIL SUCH TIME THAT THE CITY AND PNM ACCEPTS THE RESPONSIBILITY. THIS SHALL BE INCIDENTAL TO CONSTRUCTION.
11. THE DESIGN IS BASED UPON TYPE III, 400 WATT, 240 V, HIGH PRESSURE SODIUM, FULL CUT-OFF FLAT GLASS LUMINAIRES WITHOUT INDIVIDUAL PHOTO CELLS ON THE SOUTH SIDE OF CERRILLOS, AND TYPE III, 250 WATT, 240 V, HIGH PRESSURE SODIUM, FULL CUT-OFF FLAT GLASS LUMINAIRES WITHOUT INDIVIDUAL PHOTO CELLS ON THE NORTH SIDE OF CERRILLOS.
12. THE CONTRACTOR SHALL REMOVE EXISTING SERVICE RISERS, SERVICE POLES, CONTROL CABINETS, AND EXISTING WIRING AS REQUIRED BY PNM AND AS DIRECTED BY THE PROJECT MANAGER. THIS WORK SHALL BE INCIDENTAL TO CONSTRUCTION.
13. ALL LIGHTING CONTROL CABINETS SHALL INCLUDE PHOTO ELECTRIC CELLS.
14. LIGHTING STANDARDS SHALL BE LOCATED TO PROVIDE A 4' MINIMUM SIDEWALK CLEAR SPACE.
15. ALL LIGHTING CONTROL CABINETS AND ELECTRICAL CONTACTORS SHALL BE TESCO (OR APPROVED EQUAL).
16. LIGHTS NEAR EXISTING OVERHEAD TRANSMISSION LINES MUST MAINTAIN A 7.5' RADIAL CLEARANCE FROM THE NEUTRAL. PNM WILL ASSIST IN MEASUREMENT AND DETERMINATION OF CLEARANCE.
17. LIGHTING WILL BE COMPLETED WITH CONSTRUCTION PHASING, REFER TO SECTION 6 OF THE PLAN SET. NEW LIGHTING SHALL BE OPERATIONAL PRIOR TO OPENING ROADWAY TO TRAFFIC.
18. LIGHTING CONTROL CABINETS SHALL BE SIX CIRCUIT, METERED.
19. THE CONTRACTOR SHALL NOTIFY PNM TO ESTABLISH ELECTRICAL SERVICE IN THE CITY OF SANTA FE'S NAME. THE CONTRACTOR SHALL PAY FOR COSTS FOR PNM TO PROVIDE POWER SERVICE. THESE COSTS WILL BE PAID FOR UNDER ITEM NO. 706350 POWER SERVICE INSTALLATION.
20. THE CONTRACTOR SHALL CONSTRUCT THE LIGHTING FOUNDATIONS FLUSH WITH THE FINISHED GRADE/ADJACENT GROUND.
21. ALL STREET LIGHTING SHALL BE GE LIGHTING SYSTEMS M-400A POWER/DOOR LUMINAIRE WITH CUT-OFF OPTICS AND SHALL CONFORM WITH THE NEW MEXICO NIGHT SKY PROTECTION ACT.
22. ALL CONDUIT INSTALLED IN A TRENCH SHALL BE A MINIMUM OF 30 INCHES DEEP AND FLAGGED WITH CAUTION TAPE ONE FOOT ABOVE THE CONDUIT.
23. LIGHTING FOUNDATIONS ARE PAID COMPLETELY UNDER ITEMS 502030 DRILLED SHAFT FOUNDATION 30" DIAMETER AND 540060 REINFORCING BARS GRADE 60.
24. DRILLED SHAFTS SHALL BE CONSTRUCTED IN ACCORDANCE WITH NMDOT STANDARD SPECIFICATION SECTION 502.
25. EACH CIRCUIT FOR ROADWAY LIGHTING SHALL BE INSTALLED IN A SEPARATE CONDUIT UNLESS APPROVED OTHERWISE.
26. THE CONTRACTOR SHALL ARRANGE A NIGHT INSPECTION OF THE LIGHTING SYSTEM WITH THE PROJECT MANAGER AND PNM TO ENSURE COMPLIANCE WITH THE NEW MEXICO NIGHT SKY PROTECTION ACT AND PROPER LEVELING OF LUMINAIRE HEADS.
27. THE FOLLOWING NMDOT STANDARDS SHALL BE USED:
    - ELECTRICAL SERVICE 706L-02-1/1
    - LIGHTING CABINET 706L-08-1/2
    - TYPE V STANDARD 707L-07-1/11 TO 7/11
    - FOUNDATION 707L-07-9/11 AND 10/11
    - PULL BOX DETAILS 710S-01-1/1
28. STANDARD DRAWING 707L-07-10/11 SHOWS CLASS A CONCRETE AND QUANTITIES FOR LIGHTING FOUNDATION. ITEM 511000 STRUCTURAL CONCRETE CLASS A SHALL NOT BE USED. USE ITEM 502030 DRILLED SHAFT FOUNDATION 30" DIAMETER WHICH IS MEASURED PER LIN. FT. CONCRETE REQUIRED TO FILL SHAFTS IS INCIDENTAL TO THE DRILLED SHAFT ITEM.

LIGHTING INCIDENTAL ITEMS

1. ANCHOR BOLTS FOR FOUNDATIONS.
2. GROUND RODS FOR FOUNDATIONS.
3. CONCRETE FOR DRILLED SHAFT FOUNDATIONS.
4. UNIVERSAL SUPPORT BRACKETS FOR SERVICE RISERS.
5. CONCRETE FOUNDATION FOR LIGHTING CONTROL CABINETS INCLUDING EXCAVATION, BACKFILL, CONCRETE, GROUND RODS, AND ANCHOR BOLTS.
6. CONCRETE COLLARS FOR PULLBOXES.
7. CONDUCTORS IN TYPE V STANDARDS.
8. PULL STRING IN EMPTY CONDUITS.
9. REMOVAL AND SALVAGE OF EXISTING LUMINAIRES AND POLES AS SHOWN IN THE PLANS.
10. REMOVAL OF EXISTING CONDUITS, WIRING, PULL BOXES, LUMINAIRES, LIGHTING STANDARDS, AND FOUNDATIONS AS DIRECTED.
11. REMOVAL OF EXISTING SERVICE RISERS, SERVICE POLES, AND CONTROL CABINETS.
12. BREAKAWAY SYSTEMS ON LIGHT STANDARDS.
13. SINGLE CONDUCTOR 8 GROUND WIRE IN EACH R.E.C. RUN
14. ANCHOR BOLTS, HARDWARE AND PROTECTIVE COATING FOR TYPE V STANDARDS.
15. PROVIDING ENERGY FOR BURN-IN PERIOD FOR LIGHTING UNTIL ACCEPTED BY CITY OF SANTA FE.

ROADWAY LIGHTING SUMMARY OF QUANTITIES

ITEM NO.	DESCRIPTION	UNIT	TOTAL	USE
502030	DRILLED SHAFT FOUNDATION 30" DIAMETER	LIN.FT.	123.5	130
540060	REINFORCING BARS GRADE 60	LBS	3,097	3,100
706350	POWER SERVICE INSTALLATION *	L.S.	L.S.	L.S.
706405	LIGHTING CONTROL CABINET, SIX CIRCUIT (METERED)	EACH	2	2
707540	TYPE V STANDARD, 40'	EACH	19	19
709020	RIGID ELECTRICAL CONDUIT 2" (DIA.)	LIN.FT.	4,155	4,200
709030	RIGID ELECTRICAL CONDUIT 3" (DIA.)	LIN.FT.	400	400
710000	ELECTRICAL PULL BOX (STANDARD)	EACH	6	6
711102	SINGLE CONDUCTOR 2	LIN.FT.	9,820	10,000
716040	ROADWAY LUMINAIRE TYPE 400S	EACH	19	19

*** POWER SERVICE INSTALLATION IS ALSO A BID ITEM FOR TRAFFIC SIGNALIZATION AS IDENTIFIED IN SECTION 9. THE CONTRACTOR WILL BE PAID FOR ONE BID ITEM FOR POWER SERVICE INSTALLATION (ITEM NO. 706350) THAT WILL INCLUDE BOTH LIGHTING AND SIGNAL ITEMS.**

LIGHTING LEGEND

NEW	EXISTING	ITEM
		LIGHTING STANDARD WITH LUMINAIRE AS INDICATED
		LIGHTING STANDARD WITH DOUBLE ARM LUMINAIRE AS INDICATED
		CONDUIT RUN
		PULL BOX
J	J	JUNCTION BOX
		SERVICE POLE WITH SERVICE RISER
LC	LC	LIGHTING CONTROL CABINET

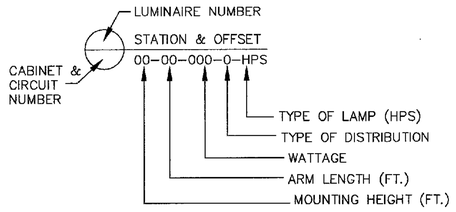

NO.	DESCRIPTION	DATE	BY
3			
2			
1			

REVISIONS (OR CHANGE NOTICES)

NANCIE L. ADAMS NEW MEXICO 14494 REGISTERED PROFESSIONAL ENGINEER 10/2/15

SCALE

CITY OF SANTA FE

CERRILLOS ROAD PHASE IIC
CAMINO CARLOS REY TO
LLANO STREET
SANTA FE COUNTY

ROADWAY LIGHTING NOTES, QUANTITIES AND INCIDENTAL ITEMS

DESIGNED BY: NLA	DRAWN BY: NLA	CHECKED BY: GKP
DATE: 10/2/15	DATE: 10/2/15	DATE: 10/2/15

N.M. PROJECT NO. CN S100130 SHEET NO. 8-1

Parametrix
ENGINEERING . PLANNING . ENVIRONMENTAL SCIENCES
8801 Jefferson NE, Building B
Albuquerque, NM 87113
P. 505.821.4700 F. 505.821.7131
www.parametrix.com

CITY OF SANTA FE	SHEET
NEW MEXICO PROJECT NO.	NO.
CN S100130	8–2

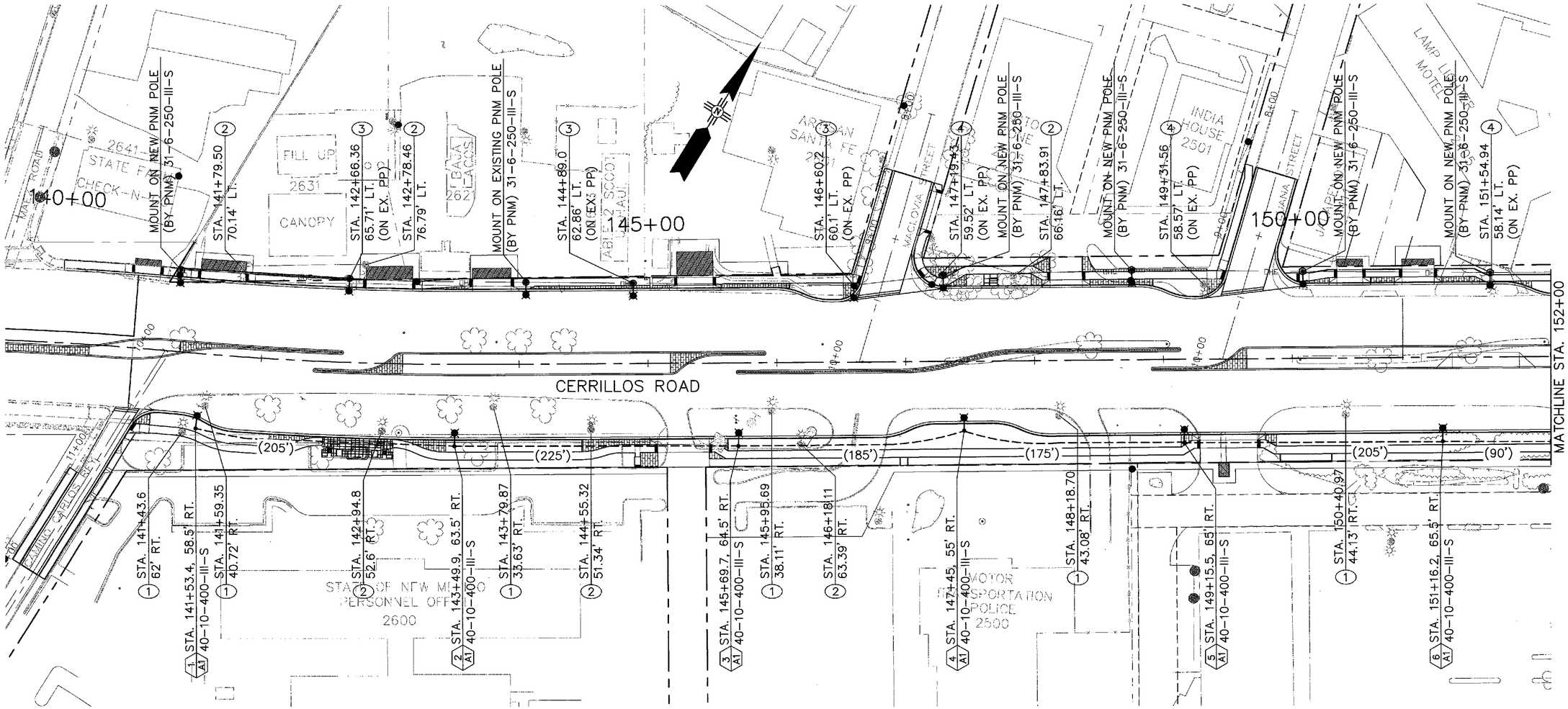

NOTES:

1. A 2" CONDUIT SHALL RUN FROM LIGHT POLE TO LIGHT POLE (OR PULL BOX) AS SHOWN. THE FILL FOR THIS CONDUIT SHALL BE TWO NO. 2 CONDUCTORS AND ONE NO. 8 CONDUCTOR.
2. CONDUIT AND CONDUCTOR SCHEDULE IS SHOWN ON SHT. 8–5.
3. FOR INTERSECTION LIGHTING AT LUJAN STREET AND ST. MICHAEL'S DRIVE, SEE SIGNAL PLANS, SECTION 9.
4. STATIONS & OFFSETS REFER TO CERRILLOS ROAD ℄ UNLESS OTHERWISE NOTED.
5. FOR CLARITY OF PLANS, NOT ALL OF THE UTILITIES ARE SHOWN. REFER TO SECTION 11 FOR UTILITIES.

KEYED NOTES:

(1) REMOVE & SALVAGE EXISTING STREET LIGHT POLE AND LUMINAIRE.

(2) REMOVE EXISTING LIGHT POLE AND LUMINAIRE (PRIVATE). STOCKPILE ON ADJACENT PROPERTY. COORDINATE WITH PROPERTY OWNER.

(3) REMOVE EXISTING LUMINAIRE AND REPLACE W/ (1) 250 WATT FLAT GLASS LUMINAIRE (BY PNM). EXISTING POLE TO REMAIN.

(4) REMOVE & DISPOSE EXISTING LUMINAIRE (BY PNM)

NO.	DESCRIPTION	DATE	BY
3			
2			
1			

REVISIONS (OR CHANGE NOTICES)

NANCIE L. ADAMS
NEW MEXICO
14494
REGISTERED PROFESSIONAL ENGINEER
10/5/15

CITY OF SANTA FE

CERRILLOS ROAD PHASE IIC
CAMINO CARLOS REY TO
LLANO STREET
SANTA FE COUNTY

LIGHTING PLAN

SCALE
1" = 40'

DESIGNED BY: NLA	DRAWN BY: NLA	CHECKED BY: GKP
DATE: 7/30/15	DATE: 7/30/15	DATE: 8/11/15

N.M. PROJECT NO. CN S100130 SHEET NO. 8–2

Parametrix
ENGINEERING . PLANNING . ENVIRONMENTAL SCIENCES
8801 Jefferson NE, Building B
Albuquerque, NM 87113
P. 505.821.4700 F. 505.821.7131
www.parametrix.com

CITY OF SANTA FE	SHEET
NEW MEXICO PROJECT NO.	NO.
CN S100130	8-3

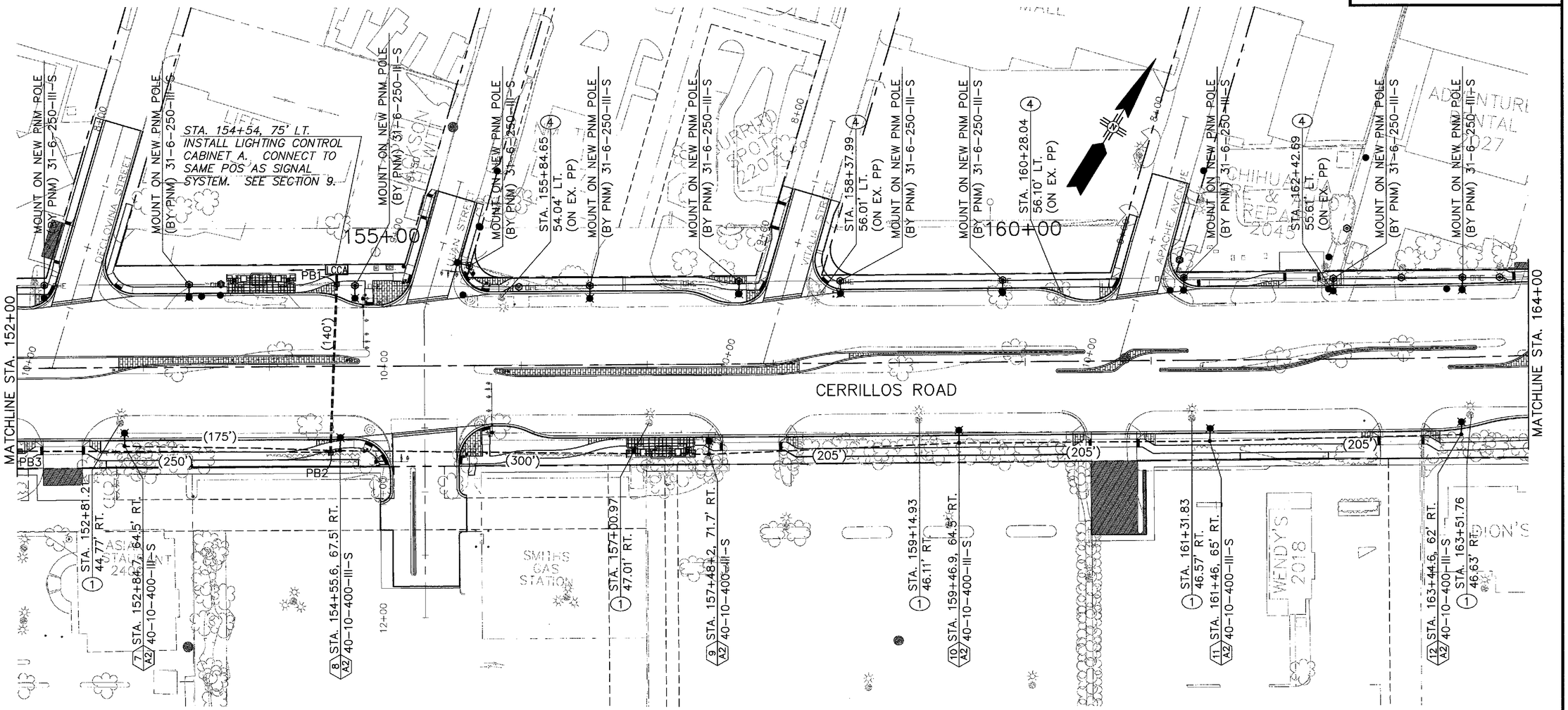

NOTES:

1. A 2" CONDUIT SHALL RUN FROM LIGHT POLE TO LIGHT POLE (OR PULL BOX) AS SHOWN. THE FILL FOR THIS CONDUIT SHALL BE TWO NO. 2 CONDUCTORS AND ONE NO. 8 CONDUCTOR.
2. CONDUIT AND CONDUCTOR SCHEDULE IS SHOWN ON SHT. 8-5.
3. FOR INTERSECTION LIGHTING AT LUJAN STREET AND ST. MICHAEL'S DRIVE, SEE SIGNAL PLANS, SECTION 9.
4. STATIONS & OFFSETS REFER TO CERRILLOS ROAD ℄ UNLESS OTHERWISE NOTED.
5. FOR CLARITY OF PLANS, NOT ALL OF THE UTILITIES ARE SHOWN. REFER TO SECTION 11 FOR UTILITIES.

KEYED NOTES:

(1) REMOVE & SALVAGE EXISTING STREET LIGHT POLE AND LUMINAIRE.

(2) REMOVE EXISTING LIGHT POLE AND LUMINAIRE (PRIVATE). STOCKPILE ON ADJACENT PROPERTY. COORDINATE WITH PROPERTY OWNER.

(3) REMOVE EXISTING LUMINAIRE AND REPLACE W/ (1) 250 WATT FLAT GLASS LUMINAIRE (BY PNM). EXISTING POLE TO REMAIN.

(4) REMOVE & DISPOSE EXISTING LUMINAIRE (BY PNM)

NO.	DESCRIPTION	DATE	BY
3			
2			
1			

REVISIONS (OR CHANGE NOTICES)

NANCIE L. ADAMS
NEW MEXICO
14496
REGISTERED PROFESSIONAL ENGINEER
10/2/15

CITY OF SANTA FE

CERRILLOS ROAD PHASE IIC
CAMINO CARLOS REY TO
LLANO STREET
SANTA FE COUNTY

LIGHTING PLAN

SCALE
1" = 40'

DESIGNED BY: NLA	DRAWN BY: NLA	CHECKED BY: GKP
DATE: 7/30/15	DATE: 7/30/15	DATE: 8/11/15

N.M. PROJECT NO. CN S100130 SHEET NO. 8-3

Parametrix
ENGINEERING . PLANNING . ENVIRONMENTAL SCIENCES
8801 Jefferson NE, Building B
Albuquerque, NM 87113
P. 505.821.4700 F. 505.821.7131
www.parametrix.com

CITY OF SANTA FE	SHEET
NEW MEXICO PROJECT NO.	NO.
CN S100130	8-4

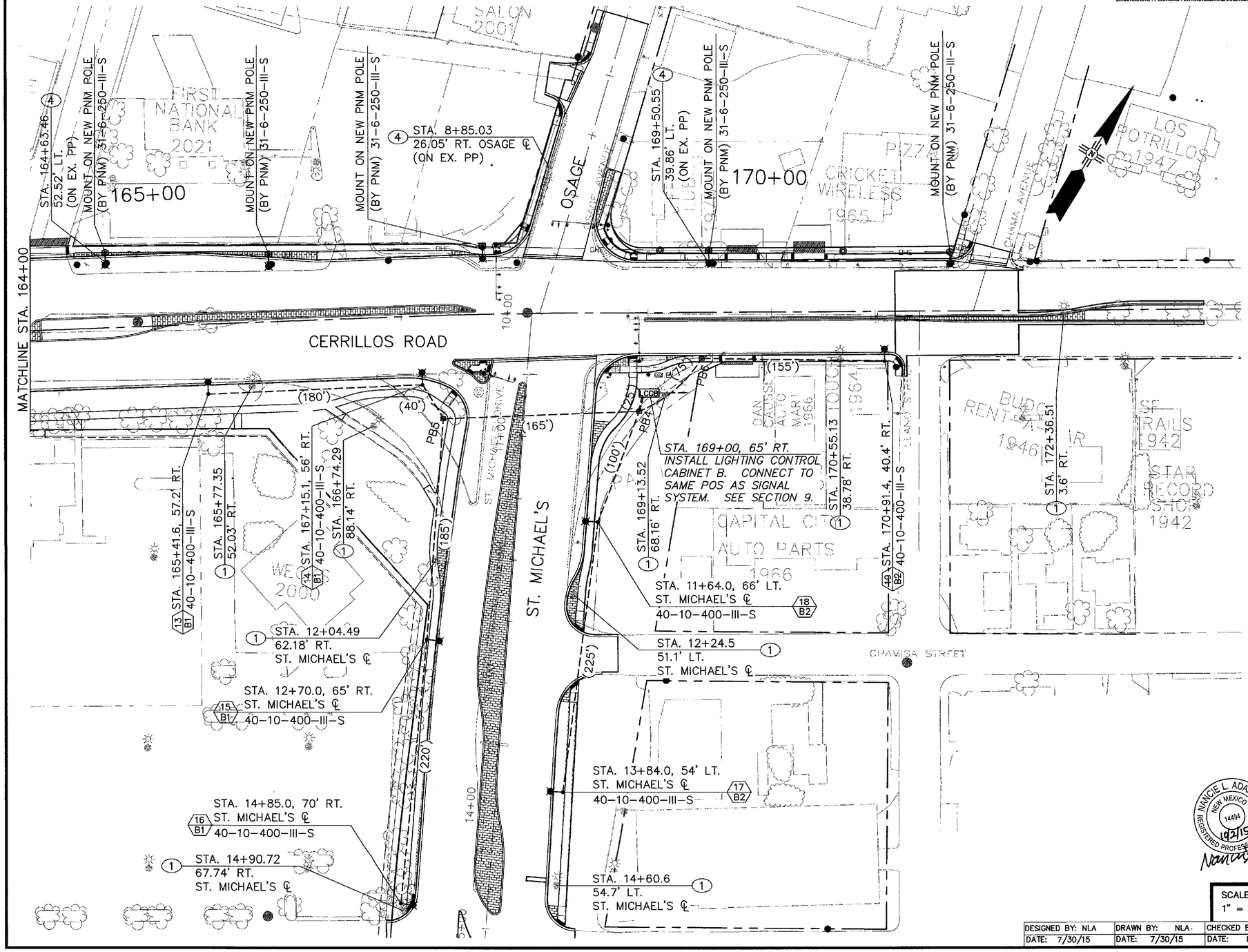

NOTES:

1. A 2" CONDUIT SHALL RUN FROM LIGHT POLE TO LIGHT POLE (OR PULL BOX) AS SHOWN. THE FILL FOR THIS CONDUIT SHALL BE TWO NO. 2 CONDUCTORS AND ONE NO. 8 CONDUCTOR.
2. CONDUIT AND CONDUCTOR SCHEDULE IS SHOWN ON SHT. 8-5.
3. FOR INTERSECTION LIGHTING AT LUJAN STREET AND ST. MICHAEL'S DRIVE, SEE SIGNAL PLANS, SECTION 9.
4. STATIONS & OFFSETS REFER TO CERRILLOS ROAD ℄ UNLESS OTHERWISE NOTED.
5. FOR CLARITY OF PLANS, NOT ALL OF THE UTILITIES ARE SHOWN. REFER TO SECTION 11 FOR UTILITIES.

KEYED NOTES:

(1) REMOVE & SALVAGE EXISTING STREET LIGHT POLE AND LUMINAIRE.

(2) REMOVE EXISTING LIGHT POLE AND LUMINAIRE (PRIVATE). STOCKPILE ON ADJACENT PROPERTY. COORDINATE WITH PROPERTY OWNER.

(3) REMOVE EXISTING LUMINAIRE AND REPLACE W/ (1) 250 WATT FLAT GLASS LUMINAIRE (BY PNM). EXISTING POLE TO REMAIN.

(4) REMOVE & DISPOSE EXISTING LUMINAIRE (BY PNM)

NO.	DESCRIPTION	DATE	BY
3			
2			
1			

REVISIONS (OR CHANGE NOTICES)

NANCIE L. ADAMS NEW MEXICO 14494 REGISTERED PROFESSIONAL ENGINEER 10/2/15

CITY OF SANTA FE

CERRILLOS ROAD PHASE IIC
CAMINO CARLOS REY TO
LLANO STREET
SANTA FE COUNTY

LIGHTING PLAN

SCALE
1" = 40'

DESIGNED BY: NLA	DRAWN BY: NLA	CHECKED BY: GKP
DATE: 7/30/15	DATE: 7/30/15	DATE: 8/11/15

N.M. PROJECT NO. CN S100130 SHEET NO. 8-4

Parametrix
ENGINEERING . PLANNING . ENVIRONMENTAL SCIENCES
8801 Jefferson NE, Building B
Albuquerque, NM 87113
P. 505.821.4700 F. 505.821.7131
www.parametrix.com

CITY OF SANTA FE	SHEET
NEW MEXICO PROJECT NO.	NO.
CN S100130	8–5

CONDUIT & CONDUCTOR SCHEDULE

CONDUIT LENGTH, SIZE & TYPE						CONDUIT FILL BY CONDUCTOR LENGTH/TYPE		
		2" R.E.C.		3" R.E.C.		#2 SINGLE CONDUCTOR		
FROM	TO	#	LENGTH	#	LENGTH	(# @ FT)		
POS	LCCA			1	200'	3	@	205'
LCCA	PB1	2	20'			4	@	25'
PB1	PB2	2	140'			4	@	145'
POS	LCCB			1	200'	3	@	205'
LCCB	PB4	2	25'			4	@	30'
CIRCUIT A1								
LUM1	LUM2	1	205'			2	@	210'
LUM2	LUM3	1	225'			2	@	230'
LUM3	LUM4	1	185'			2	@	190'
LUM4	LUM5	1	175'			2	@	180'
LUM5	LUM6	1	205'			2	@	210'
LUM6	PB3	1	90'			2	@	95'
PB3	PB2	1	250'			2	@	255'
CIRCUIT A2								
PB2	LUM8	1	15'			2	@	20'
LUM7	LUM8	1	175'			2	@	180'
LUM8	LUM9	1	300'			2	@	305'
LUM9	LUM10	1	205'			2	@	210'
LUM10	LUM11	1	205'			2	@	210'
LUM11	LUM12	1	205'			2	@	210'
CIRCUIT B1								
PB4	PB5	1	165			2	@	170'
PB5	LUM14	1	40'			2	@	45'
LUM14	LUM13	1	180'			2	@	185'
PB5	LUM15	1	185'			2	@	190'
LUM15	LUM16	1	220'			2	@	225'
CIRCUIT B2								
LUM17	LUM18	1	225			2	@	230'
LUM18	PB4	1	100'			2	@	105'
PB4	PB6	1	75'			2	@	80'
PB6	LUM19	1	155'			2	@	160'
	TOTAL		**4,155'**		**400'**			**9,820'**
	USE		**4,200'**		**400'**			**10,000'**

ABBREVIATIONS:
- POS - POINT OF SERVICE
- LCC - LIGHTING CONTROL CABINET
- PB - PULL BOX
- LUM - LUMINAIRE

NANCIE L. ADAMS
NEW MEXICO
14494
REGISTERED PROFESSIONAL ENGINEER
10/2/15

NO.	DESCRIPTION	DATE	BY
3			
2			
1			

REVISIONS (OR CHANGE NOTICES)

CITY OF SANTA FE

CERRILLOS ROAD PHASE IIC
CAMINO CARLOS REY TO
LLANO STREET
SANTA FE COUNTY

LIGHTING CONDUIT &
CONDUCTOR SCHEDULE

SCALE

DESIGNED BY: NLA	DRAWN BY: NLA	CHECKED BY: GKP
DATE: 8/11/15	DATE: 8/11/15	DATE: 8/11/15

N.M. PROJECT NO. CN S100130 SHEET NO. 8–5

SIGNAL NOTES

1. LOCATIONS OF CONDUITS, FOUNDATIONS, CONTROL CABINETS, POLES, PULL BOXES, MANHOLES, AND SPLICE CABINETS SHOWN ON THE PLANS ARE SCHEMATIC AND SHALL BE ADJUSTED IN THE FIELD TO MAXIMIZE CLEAR SPACE AVAILABLE FOR PEDESTRIANS AND WHEELCHAIRS TO COMPLY WITH THE AMERICANS WITH DISABILITIES ACT. THE CONTRACTOR SHALL MEET WITH THE PROJECT MANAGER IN THE FIELD AT ALL LOCATIONS TO SPOT EQUIPMENT BEFORE BEGINNING THE WORK. ALL SUCH EQUIPMENT SHALL BE INSTALLED WITHIN THE RIGHT-OF-WAY.
2. THE CONTRACTOR IS WARNED THAT EXISTING CONDUITS MAY CONTAIN AC POWER AND CAUTION SHALL BE EXERCISED IN INTERCEPTING OR INSTALLING CABLE IN EXISTING CONDUIT.
3. THE CONTRACTOR SHALL BORE, DRILL, OR PUSH WHEN CROSSING EXISTING PAVEMENTS AND DRIVEWAYS. CONTRACTOR SHALL FIRST LOCATE ALL EXISTING UTILITIES. THE CONTRACTOR SHALL LOCATE AND EXPOSE GAS LINES WHICH CROSS ANY PROPOSED CONDUIT RUNS. THESE EXCAVATIONS SHALL REMAIN OPEN UNTIL AFTER THE WORK IS COMPLETE. CONTRACTOR SHALL REMOVE AND REPLACE IN KIND ANY SIDEWALK OR PAVEMENT REQUIRED TO EXPOSE SUCH LINES. THIS WORK SHALL BE INCIDENTAL TO ITEMS 709020 AND 709030, RIGID ELECTRICAL CONDUIT 2" AND 3".
4. MASTARMS SHALL BE PLACED 90° TO THE CENTERLINE UNLESS OTHERWISE NOTED.
5. MOUNT ALL CONTROLLERS SO DOORS FACE AWAY FROM TRAFFIC, UNLESS OTHERWISE SHOWN ON PLANS OR DIRECTED BY PROJECT MANAGER.
6. THE TRAFFIC SIGNAL CABINET AND CONTROLLER INSTALLED AT AN INTERSECTION SHALL BE CAPABLE OF INTERCONNECTION AND COMMUNICATION WITH SIGNAL CONTROLLERS AT OTHER INTERSECTIONS ALONG CERRILLOS ROAD. THE EXISTING SIGNAL CABINETS AT THESE INTERSECTIONS ARE "ECONOLITE" BRAND TS2 TYPE I, AND THE EXISTING SIGNAL CONTROLLERS AT THESE INTERSECTIONS ARE "ECONOLITE" BRAND.
7. ALL SPLICES FOR TRAFFIC SIGNAL MULTI-CONDUCTOR CABLE (MCC) SHALL BE MADE ABOVE GROUND (IN CABINET OR STANDARD BASE). NO SPLICING OF MCC WILL BE PERMITTED IN PULL BOXES.
8. SPLICING OF COMMUNICATIONS CABLE WILL NOT BE PERMITTED IN PULL BOXES. SPLICING OF COMMUNICATIONS CABLE (CONNECTIONS) WILL BE PERMITTED ONLY AT ITS MANHOLES, SPLICE CABINETS, OR CONTROL CABINETS WITH SPLICE BLOCKS. SPLICING OF VIDEO DETECTION COAXIAL CABLE WILL NOT BE PERMITTED BETWEEN THE MASTARM BASE AND THE CONTROLLER CABINET. SPLICING OF OPTICAL DETECTOR CABLE WILL NOT BE PERMITTED FROM THE OPTICAL DETECTOR TO THE CONTROLLER CABINET.
9. SIGNAL HEADS SHALL BE COVERED WHEN NECESSARY WITH PACIFIC ENTERPRISES SIGNAL COVERS OR APPROVED EQUAL.
10. ALL CONDUCTORS (WIRE) ON THIS PROJECT TO BE COPPER.
11. THE CONTRACTOR IS HEREBY ADVISED THAT THE INTERSECTION SIGNALS SHALL NOT BE TURNED ON UNTIL THE SIGNAL IS COMPLETELY INSTALLED, INCLUDING FULLY ACTUATED OPERATION (ALL PUSH-BUTTON WIRING SHALL BE OPERATIONAL).
12. FLASHING OPERATION IS NOT CONSIDERED THE BEGINNING OF THE FIELD TESTING PERIOD.
13. ACCEPTABLE TYPE II AND TYPE III STANDARDS ARE VALMONT, UNION METAL, JEM, OR APPROVED EQUAL. ALL STANDARDS SHALL CONFORM TO THE CITY OF SANTA FE SPECIFICATIONS.
14. THE CONTRACTOR SHALL NOTIFY THE CITY OF SANTA FE TRAFFIC OPERATIONS SECTION AT (505)955-2320 – RICK DEVINE, AT LEAST TWO WORKING DAYS IN ADVANCE OF ANY ANTICIPATED WORK ON THE SIGNALS, LIGHTING, AND POWER SERVICES. CONTRACTOR SHALL ALSO NOTIFY THE PUBLIC SERVICE COMPANY OF NEW MEXICO (PNM) (TOM DOMINGUEZ AT 505-473-3209) – FOR ASSISTANCE IN POWER SHUTOFF AND RECONNECTIONS AS WELL AS WHEN WORKING NEAR OVERHEAD TRANSMISSION LINES. THE CITY OF SANTA FE TRAFFIC ENGINEERING PERSONNEL MUST BE PRESENT WHEN THE SIGNALS ARE SHUT OFF OR TURNED ON. THE CONTRACTOR SHALL ALSO NOTIFY THE CITY OF SANTA FE EACH TIME A TRAFFIC SIGNAL DOOR IS OPENED.
15. THE CONTRACTOR SHALL NOTIFY THE PUBLIC SERVICE COMPANY OF NM (PNM) 30 DAYS IN ADVANCE OF ANTICIPATED POWER SERVICE CONNECTIONS. THE CONTRACTOR SHALL COORDINATE WITH PNM TO ESTABLISH ELECTRICAL SERVICE IN THE CITY OF SANTA FE'S NAME. THE CONTRACTOR SHALL PAY PNM ALL COSTS TO PROVIDE ELECTRICAL SERVICE. THIS WORK WILL BE CONSIDERED INCIDENTAL TO BID ITEM 706350 POWER SERVICE INSTALLATION.
16. THE CONTRACTOR IS RESPONSIBLE FOR THE COST OF THE POWER AND MAINTENANCE UNTIL SUCH TIME AS THE SIGNAL IS ACCEPTED FOR MAINTENANCE BY THE CITY OF SANTA FE.
17. THE CONTRACTOR SHALL REMOVE AND DISPOSE ALL CONFLICTING SIGNING WHEN TRAFFIC SIGNALS ARE PUT INTO OPERATION. THIS SHALL BE PAID FOR UNDER ITEM NO. 601000, REMOVAL OF STRUCTURES AND OBSTRUCTIONS.
18. FOR CONDUITS CONTAINING ONLY LOW VOLTAGE COMMUNICATIONS CABLES, THE REQUIREMENTS FOR SINGLE CONDUCTOR BARE COPPER #8 AWG MAY BE WAIVED WHERE PERMITTED BY THE NATIONAL ELECTRICAL CODE.
19. EXISTING CONDUITS TO BE REMOVED OR ABANDONED SHALL HAVE ALL WIRING REMOVED. ALL WIRING SHALL BE TURNED OVER TO THE CITY OF SANTA FE SIGNAL SHOP IN THE CONDITION RECOVERED FROM THE CONDUIT.
20. EXISTING CONDUITS SHALL BE REPAIRED, ADJUSTED, OR REPLACED AS DIRECTED BY THE PROJECT MANAGER WHERE ELECTRICAL PULL BOXES OR TRAFFIC MANHOLES ARE INSTALLED OR REPLACED.
21. ALL DATA SHOWN HEREIN CONCERNING EXISTING UTILITIES HAS BEEN OBTAINED FROM "AS-BUILT" DRAWINGS AND FROM FIELD OBSERVATIONS WHICH MAY OR MAY NOT BE ACCURATE. THE CONTRACTOR WILL BE RESPONSIBLE FOR EXPLORATORY TRENCHING IF NECESSARY, TO MORE SPECIFICALLY LOCATE UTILITY LINES. COST OF LOCATING UTILITY LINES INCLUDING EXPLORATORY TRENCHING WILL BE CONSIDERED INCIDENTAL TO CONSTRUCTION.
22. THE CONTRACTOR SHALL PROVIDE AN AIR FOIL ON ALL MASTARMS PER MANUFACTURER SPECIFICATIONS.
23. CONTRACTOR SHALL INSTALL AND MAINTAIN TEMPORARY CONSTRUCTION TRAFFIC CONTROL AS PER THE PLANS AND THE CURRENT EDITION OF M.U.T.C.D. (2009).

SIGNAL NOTES (CONT'D)

24. ALL SIGNAL HEADS SHALL INCLUDE VISORS AND SHALL BE DIRECTED TOWARD THE TRAFFIC MOVEMENT FOR WHICH THE SIGNAL HEAD IS INTENDED SO THAT THE INDICATION IS NOT CONFUSING TO CONFLICTING TRAFFIC MOVEMENTS.
25. THE CONTRACTOR IS HEREBY ADVISED THAT UTILITY RELOCATION WORK BY THE UTILITY OWNERS MAY HAVE TO BE PERFORMED CONCURRENTLY WITH CONSTRUCTION. THE CONTRACTOR SHALL PROVIDE FOR UTILITY WORK IN CONJUNCTION WITH CONSTRUCTION OPERATIONS AND SHALL BE REQUIRED TO COORDINATE SCHEDULING OF WORK WITH THE RESPECTIVE UTILITY OWNERS. ANY CLAIMS FOR DELAY SHALL BE CONTROLLED BY THE TERMS AND CONDITIONS OF SUBSECTIONS 105.6, COOPERATION WITH UTILITIES, AND 107.20, CONTRACTOR'S RESPONSIBILITY, OF THE STANDARD SPECIFICATIONS FOR HIGHWAY AND BRIDGE CONSTRUCTION, CURRENT EDITION.
26. THE CONTRACTOR IS RESPONSIBLE FOR OBTAINING UTILITY LOCATIONS FROM THE APPROPRIATE UTILITY OWNER AS LISTED ON THE COVER SHEET. LOCATES CAN BE REQUESTED BY CALLING THE "ONE CALL" SYSTEM AT (800) 321-2537, 48 HOURS IN ADVANCE.
27. THE CONTRACTOR WILL NOT RECEIVE ADDITIONAL COMPENSATION FOR TIME EXTENSIONS FOR DELAYS OR INCONVENIENCES OR DAMAGES SUSTAINED DUE TO ANY INTERFERENCES FROM SAID UTILITY APPURTENANCES OR THE OPERATION OF MOVING THEM AS THE RESULT OF THE CONTRACTORS NEGLIGENCE.
28. EXTENDED CALL (EC) LOOP DETECTORS SHALL BE PLACED 254 FT. UPSTREAM OF STOP BARS ON ROADWAYS WITH AN APPROACH SPEED OF 35 MILES PER HOUR (MPH) AND 284 FT. UPSTREAM OF STOP BARS ON ROADWAYS WITH AN APPROACH SPEED OF 40 MPH.

TRAFFIC SIGNAL EQUIPMENT REQUIREMENTS

1. THIS PROJECT INVOLVES THE EXPANSION OF AN EXISTING ARTERIAL SIGNAL SYSTEM ALONG CERRILLOS ROAD. THE SIGNAL EQUIPMENT INSTALLED AT THESE INTERSECTIONS WILL BE INTERCONNECTED AND SHALL BE ABLE TO COMMUNICATE WITH OTHER CONTROLLERS ALONG CERRILLOS ROAD.
   A. EXISTING TRAFFIC CONTROLLERS ALONG CERRILLOS ROAD ARE "ECONOLITE" 8 PHASE. CABINETS ARE TS-2 TYPE I WITH REAR DOORS. CONTROLLER AND CABINET SHALL BE APPROVED BY CITY OF SANTA FE SIGNAL SHOP PRIOR TO INSTALLATION.
   B. ALL EIGHT PHASE DUAL RING CONTROLLER CABINETS SUPPLIED FOR THIS PROJECT SHALL BE "P" SIZE CABINETS WITH 16 POSITION BACK PANEL, TWO (2) STANDARD DETECTOR RACK WIRED FOR OPTICOM, TELEMETRY BOARDS, SANTA FE APPROVED TRANSIENT VOLTAGE SURGE SUPPRESSERS FOR AC POWER AND LOW VOLTAGE AND ALL CONNECTING HARNESSES. THE CABINET SHALL COME FULLY EQUIPPED WITH AN APPROVED VIDEO CAMERA INTERFACE PANEL.
2. EMERGENCY VEHICLE PRE-EMPT EQUIPMENT SHALL BE GTT "OPTICOM" MODEL 762, PHASE SELECTORS MOUNTED ON GTT "OPTICOM" MODEL 760 RACKS, OR APPROVED EQUAL. ALL RACKS SHALL BE CAPABLE OF PROVIDING TWO CHANNELS OF DETECTION. PHASE SELECTOR MODULES SHALL BE CAPABLE OF TWO CHANNELS OF DETECTION EACH. OPTICAL DETECTORS SHALL BE GTT "OPTICOM" MODEL 711, 1 CHANNEL, 1 DIRECTION OR APPROVED EQUAL. OPTICAL DETECTOR CABLE SHALL BE GTT "OPTICOM" MODEL 138 OR EQUAL. A MANUFACTURER'S REPRESENTATIVE SHALL ASSIST IN SETTING UP, TURNING ON, PROGRAMMING AND FIELD TESTING PRE-EMPTION EQUIPMENT TO INSURE THAT EQUIPMENT IS OPERATIONAL. THE CONTRACTOR SHALL COORDINATE THIS WORK WITH THE CITY OF SANTA FE TRAFFIC SIGNAL SUPERVISOR, RICK DEVINE, AT (505) 955-2320.
3. ITEM NO. 714001 – TRAFFIC TECHNICIAN SIGNAL CABINET TRAINING COURSE: THE CONTRACTOR SHALL PROVIDE TRAINING FOR TWO TRAFFIC SIGNAL TECHNICIANS AT THE MANUFACTURER'S FACTORY ON THE SUBJECTS OF TRAFFIC SIGNAL CABINET WIRING AND TROUBLESHOOTING. THE TRAINING SHALL BE ALL- INCLUSIVE FOR FOUR DAYS OF TRAINING, ROUNDTRIP AIRFARE FROM ALBUQUERQUE, NEW MEXICO. LOCAL TRANSPORTATION, LODGING, AND MEALS. APPROPRIATE CITY OF SANTA FE APPROVALS MUST BE OBTAINED PRIOR TO INCLUSION IN CONTRACT.
4. ALL SIGNAL ASSEMBLIES, PEDESTRIAN SIGNALS, PEDESTRIAN PUSH BUTTONS, CABINETS, AND FITTINGS SHALL COMPLY WITH THE CITY OF SANTA FE TYPE AND COLOR REQUIREMENTS.
5. ALL BACK PLATES SHALL BE LOUVERED.
6. LOAD SWITCHES AND SIGNAL FLASHER SHALL BE PER THE NMDOT "STANDARD SPECIFICATIONS FOR HIGHWAY AND BRIDGE CONSTRUCTION" MOST CURRENT EDITION.
7. UNLESS OTHERWISE NOTED ON THE PLANS OR SPECIFICATIONS, ALL SIGNAL WORK INCLUDING MATERIALS SHALL COMPLY WITH THE NEW MEXICO DEPARTMENT OF TRANSPORTATION "STANDARD SPECIFICATIONS FOR HIGHWAY AND BRIDGE CONSTRUCTION" MOST CURRENT EDITION.
8. ALL TYPE I STANDARDS SHALL BE SPUN ALUMINUM WITH A BASE COLLAR. NO SUBSTITUTIONS WILL BE ALLOWED.
9. ALL SIGNAL INDICATIONS SHALL BE APPROVED L.E.D. TYPE AND SHALL CONFORM TO THE PERFORMANCE SPECIFICATIONS OF THE INSTITUTE OF TRANSPORTATION ENGINEERS "VEHICLE TRAFFIC CONTROL SIGNAL HEADS: LIGHT EMITTING DIODE (LED) CIRCULAR SIGNAL SUPPLEMENT" AND "VEHICLE TRAFFIC CONTROL SIGNAL HEADS: LIGHT EMITTING DIODE VEHICLE ARROW TRAFFIC SIGNAL SUPPLEMENT".
10. ALL PEDESTRIAN SIGNALS SHALL BE APPROVED L.E.D. COUNTDOWN TYPE AND SHALL CONFORM TO THE PERFORMANCE SPECIFICATION OF THE INSTITUTE OF TRANSPORTATION ENGINEERS "PEDESTRIAN TRAFFIC CONTROL SIGNAL INDICATORS: LIGHT EMITTING DIODE (LED) SIGNAL MODULES", AUGUST 2010. ALL PEDESTRIAN SIGNAL HEADS SHALL INCLUDE GRATES AND OUTER VISORS.
11. PUSH BUTTONS SHALL BE POLARA "BULLDOG" – "BDS-010-BULLDOG III SERIES VANDAL RESISTANT ADA PUSH BUTTON WITHOUT LED" OR APPROVED EQUAL.
12. PEDESTRIAN SIGNAL HEAD TO INCLUDE VISOR.

PARSONS BRINCKERHOFF

CITY OF SANTA FE	SHEET
NEW MEXICO PROJECT NO.	NO.
CN S100130	9-1

PAUL F. STEFFIN NEW MEXICO 10/6/2015 REGISTERED PROFESSIONAL ENGINEER

NO.	DESCRIPTION	DATE	BY
3			
2			
1			

REVISIONS (OR CHANGE NOTICES)

CITY OF SANTA FE

CERRILLOS ROAD PHASE IIC
CAMINO CARLOS REY TO
LLANO STREET
SANTA FE COUNTY

TRAFFIC SIGNAL INSTALLATION
GENERAL NOTES

SCALE
N.T.S.

DESIGNED BY: PB	DRAWN BY: PB	CHECKED BY: JB
DATE: 08/07/15	DATE: 08/07/15	DATE: 08/07/15

PARSONS BRINCKERHOFF

CITY OF SANTA FE	SHEET
NEW MEXICO PROJECT NO.	NO.
CN S100130	9–2

TRAFFIC SIGNAL QUANTITIES						
NUMBER	ITEM	UNIT	CERRILLOS RD / LUJAN ST	CERRILLOS RD / ST MICHAELS DR	ITS PLANS	TOTAL
502036	DRILLED SHAFT FOUNDATION 36" DIAMETER	L.F.	32	32	0	64
502042	DRILLED SHAFT FOUNDATION 42" DIAMETER	L.F.	32	32	0	64
511000	STRUCTURAL CONCRETE - CLASS A	CYYDS	4	4	1	9
540060	REINFORCING BARS -GRADE 60	LBS	119	102	17	238
706200	METER PEDESTAL (SIGNAL)	EACH	1	1	0	2
706350	POWER SERVICE INSTALLATION	L.S.	L.S.	L.S.	-	L.S.
707010	TYPE I STANDARD, 10'	EACH	2	2	1	5
707015	TYPE I STANDARD, 15'	EACH	4	3	0	7
707325	TYPE III STANDARD, 25' ARM	EACH	2	1	0	3
707340	TYPE III STANDARD, 40' ARM	EACH	2	1	0	3
707345	TYPE III STANDARD, 45' ARM	EACH	0	2	0	2
709020	RIGID ELECTRICAL CONDUIT 2"	L.F.	545	575	16,330	17,450
709030	RIGID ELECTRICAL CONDUIT 3"	L.F.	2,835	2,320	3,135	8,290
710000	ELECTRICAL PULL BOX (STANDARD)	EACH	9	8	0	17
710010	ELECTRICAL PULL BOX (LARGE)	EACH	9	9	0	18
710400	TRAFFIC SIGNAL MANHOLE	EACH	1	1	0	2
711005	MULTI-CONDUCTOR CABLE 5	L.F.	2,700	2,755	0	5,455
711007	MULTI-CONDUCTOR CABLE 7	L.F.	435	470	0	905
711020	MULTI-CONDUCTOR CABLE 20	L.F.	1,620	1,600		3,220
711102	SINGLE CONDUCTOR 2	L.F.	675	675	0	1,350
711106	SINGLE CONDUCTOR 6	L.F.	810	800	0	1,610
711108	SINGLE CONDUCTOR 8	L.F.	1,830	1,545	0	3,375
711110	SINGLE CONDUCTOR 10	L.F.	1,530	1,700	0	3,230
712031	3 SECTION TRAFFIC SIGNAL ASSEMBLY (LED)	EACH	12	13	0	25
712041	4 SECTION TRAFFIC SIGNAL ASSEMBLY (LED)	EACH	4	4	0	8
712051	5 SECTION TRAFFIC SIGNAL ASSEMBLY (LED)	EACH	3	3	0	6
712201	PEDESTRIAN SIGNAL (LED)	EACH	8	8	0	16
712330	3 SECTION BACKPLATE	EACH	8	9	0	17
712340	4 SECTION BACKPLATE	EACH	0	1	0	1
712350	5 SECTION BACKPLATE	EACH	1	1	0	2
713020	PUSH BUTTON STATION	EACH	8	8	0	16
713030	LOOP DETECTOR WIRE	L.F.	6,280	7,470	0	13,750
713250	LOOP LEAD-IN CABLE	L.F.	11,140	9,015	0	20,155
713300	DETECTOR SAW CUT	L.F.	2,450	2,840	0	5,290
713430	PHASE SELECTOR MODULE	EACH	2	2		4
713511	OPTICAL DETECTOR, 1 DIRECTION, 1 CHANNEL	EACH	4	4	0	8
713600	OPTICAL DETECTOR CABLE	L.F.	875	940	0	1,815
713805	VIDEO COAXIAL CABLE	L.F.	0	0	430	430
713806	VIDEO POWER CABLE	L.F.	0	0	430	430
713810	VIDEO CAMERA	EACH	0	0	2	2
713812	PAN-TILT-ZOOM UNIT	EACH	0	0	2	2
713900	ADVANCED TRAFFIC MANAGEMENT SYSTEM	L.S.	-	-	L.S.	L.S.
714000	TRAFFIC ACTUATED CONTROLLER	EACH	1	1	0	2
714001	TRAFFIC TECHNICIAN SIGNAL CABINET TRAINING COURSE	L.S.	L.S.	L.S.	-	L.S.
714280	8 PHASE DOUBLE RING CONTROLLER CABINET	EACH	1	1	0	2
716040	ROADWAY LUMINAIRE TYPE 400 S	EACH	4	4	0	8
716301	INTERNALLY ILLUMINATED SIGN	EACH	4	4	0	8
750000	INTELLIGENT TRANSPORTATION SYSTEM	L.S.	-	-	L.S.	L.S.
750080	ITS MANHOLE (48" X 48" X 48")	EACH	0	0	20	20

* FIBER OPTIC SYSTEM IS ALL INCLUSIVE – SEE SHEET 9–15

TRAFFIC SIGNAL LEGEND

NEW	EXISTING	ITEM
■	□	PULL BOX
●		SERVICE POLE
M	M	METER PEDESTAL
C	C	CONTROLLER CABINET
—— ——	--------	CONDUIT RUN (SIGNALS)
— — — —	--------	CONDUIT RUN (INTERCONNECT)
		MAGNETIC LOOP DETECTOR
		TRAFFIC SIGNAL PEDESTAL POLE
1	1	CONDUIT RUN NUMBER (SIGNAL)
S1	S1	CONDUIT RUN NUMBER (POWER SERVICE)
		TYPE III STANDARD WITH MASTARM, TRAFFIC SIGNAL, BACKPLATE, OPTICAL DETECTOR AND LUMINAIRE.
		PEDESTRIAN PUSH BUTTON (MOUNTED TO SIDE OF POLE WHERE INDICATED)
		PEDESTRIAN SIGNALS (MOUNTED TO SIDE OF POLE WHERE INDICATED)
SC	SC	SPLICE CABINET
●		TRAFFIC MANHOLE
		VIDEO CAMERA

NO.	DESCRIPTION	DATE	BY
3			
2			
1			

REVISIONS (OR CHANGE NOTICES)

PAUL F. STEFFEN NEW MEXICO 10352 REGISTERED PROFESSIONAL ENGINEER 10/14/2015

CITY OF SANTA FE

CERRILLOS ROAD PHASE IIC
CAMINO CARLOS REY TO
LLANO STREET
SANTA FE COUNTY

TRAFFIC SIGNAL
ESTIMATED QUANTITIES

SCALE
N.T.S.

DESIGNED BY: PB	DRAWN BY: PB	CHECKED BY: JB
DATE: 08/07/15	DATE: 08/07/15	DATE: 08/07/15

J:\33693 Cerrillos Ph IIC\04 Engineering–33693\Plans\9_Sheets\9–1_9–2Notes&Quantities.dwg Sep 30, 2015 – 1:57pm Saved By: chavezdx

N.M. PROJECT NO. CN S100130 SHEET NO. 9–2

PARSONS BRINCKERHOFF

CITY OF SANTA FE	SHEET
NEW MEXICO PROJECT NO.	NO.
CN S100130	9-3

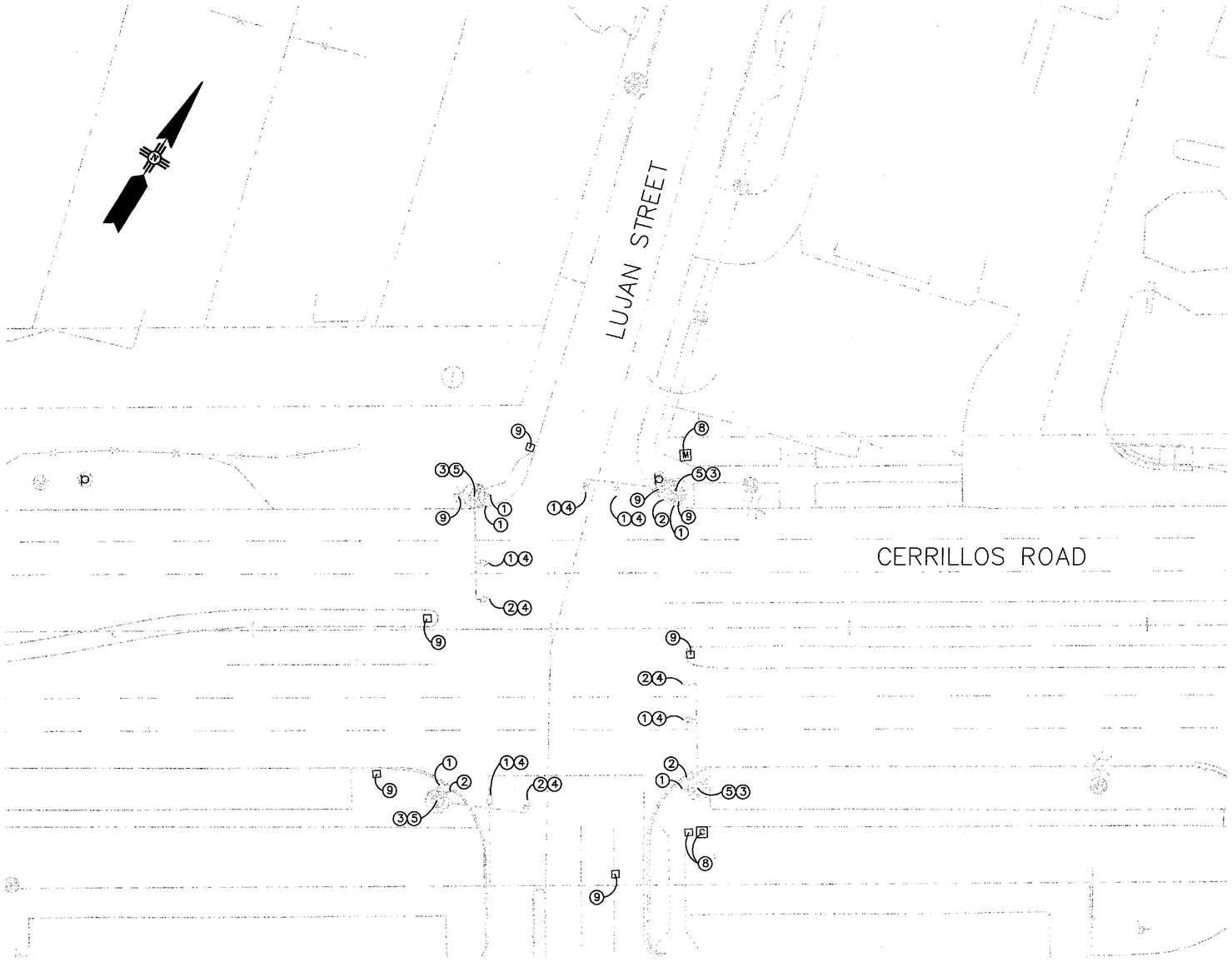

NOTES

1. REMOVE AND SALVAGE EXISTING 3-SECTION TRAFFIC SIGNAL ASSEMBLY.
2. REMOVE AND SALVAGE EXISTING 5-SECTION TRAFFIC SIGNAL ASSEMBLY.
3. REMOVE AND SALVAGE EXISTING PEDESTRIAN SIGNAL ASSEMBLIES AND PUSH BUTTONS.
4. REMOVE AND SALVAGE EXISTING BACKPLATE.
5. REMOVE AND SALVAGE EXISTING TYPE III MASTARM POLE, FOUNDATION, AND LUMINAIRE.
6. REMOVE AND SALVAGE EXISTING TYPE II MASTARM POLE.
7. REMOVE AND SALVAGE EXISTING TYPE I PEDESTAL POLE.
8. REMOVE AND SALVAGE EXISTING CONTROLLER CABINET, FOUNDATION, AND SERVICE METER.
9. REMOVE AND DISPOSE EXISTING PULL BOX.
10. REMOVE AND SALVAGE EXISTING OPTICOM.
11. REMOVE AND SALVAGE EXISTING 12 PAIR COMMUNICATION (INTERCONNECT).

EQUIPMENT SALVAGE LIST

9 EA	3-SECTION TRAFFIC SIGNAL ASSEMBLY
6 EA	5-SECTION TRAFFIC SIGNAL ASSEMBLY
8 EA	PEDESTRIAN SIGNAL ASSEMBLY
7 EA	BACKPLATE
4 EA	TYPE III MASTARM POLE AND LUMINAIRE
1 EA	CONTROLLER CABINET
0 EA	OPTICAL DETECTOR
0 EA	VIDEO DETECTION CAMERA
1 EA	SERVICE METER

SALVAGE NOTE

1. THIS SALVAGE PLAN IS SCHEMATIC IN NATURE AND FOR THE CONTRACTORS INFORMATION ONLY. THE CONTRACTOR SHALL COORDINATE WITH THE CITY OF SANTA FE TRAFFIC OPERATIONS SECTION FOR EQUIPMENT TO BE SALVAGED FROM THE TRAFFIC SIGNAL.
2. ALL EQUIPMENT, EXCEPT FOUNDATIONS WHICH SHALL BE DISPOSED OF, SHALL BE SALVAGED TO THE TRAFFIC SIGNAL SHOP AT 1142 SILER ROAD.

PAUL F. STEFFIN NEW MEXICO 16352 REGISTERED PROFESSIONAL ENGINEER 10/5/15

NO.	DESCRIPTION	DATE	BY
3			
2			
1			

REVISIONS (OR CHANGE NOTICES)

CITY OF SANTA FE

CERRILLOS ROAD PHASE IIC
CAMINO CARLOS REY TO
LLANO STREET
SANTA FE COUNTY

TRAFFIC SIGNAL REMOVAL PLAN
CERRILLOS ROAD/LUJAN STREET

SCALE
1"=20' HORIZ.

DESIGNED BY: PB	DRAWN BY: PB	CHECKED BY: JB
DATE: 08/07/15	DATE: 08/07/15	DATE: 08/07/15

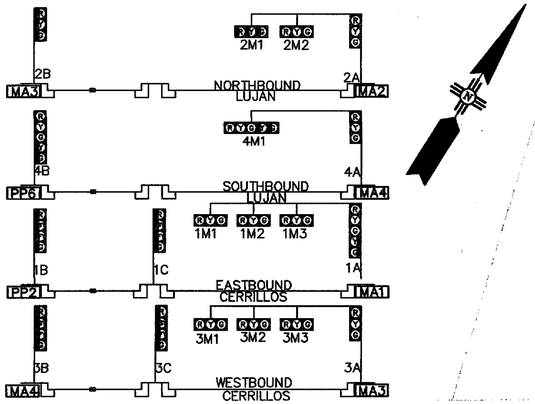

TRAFFIC SIGNAL CONFIGURATION BY APPROACH

TYPICAL SIGNAL FACE LENS ARRANGEMENTS

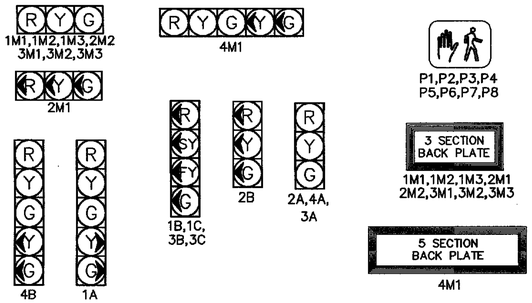

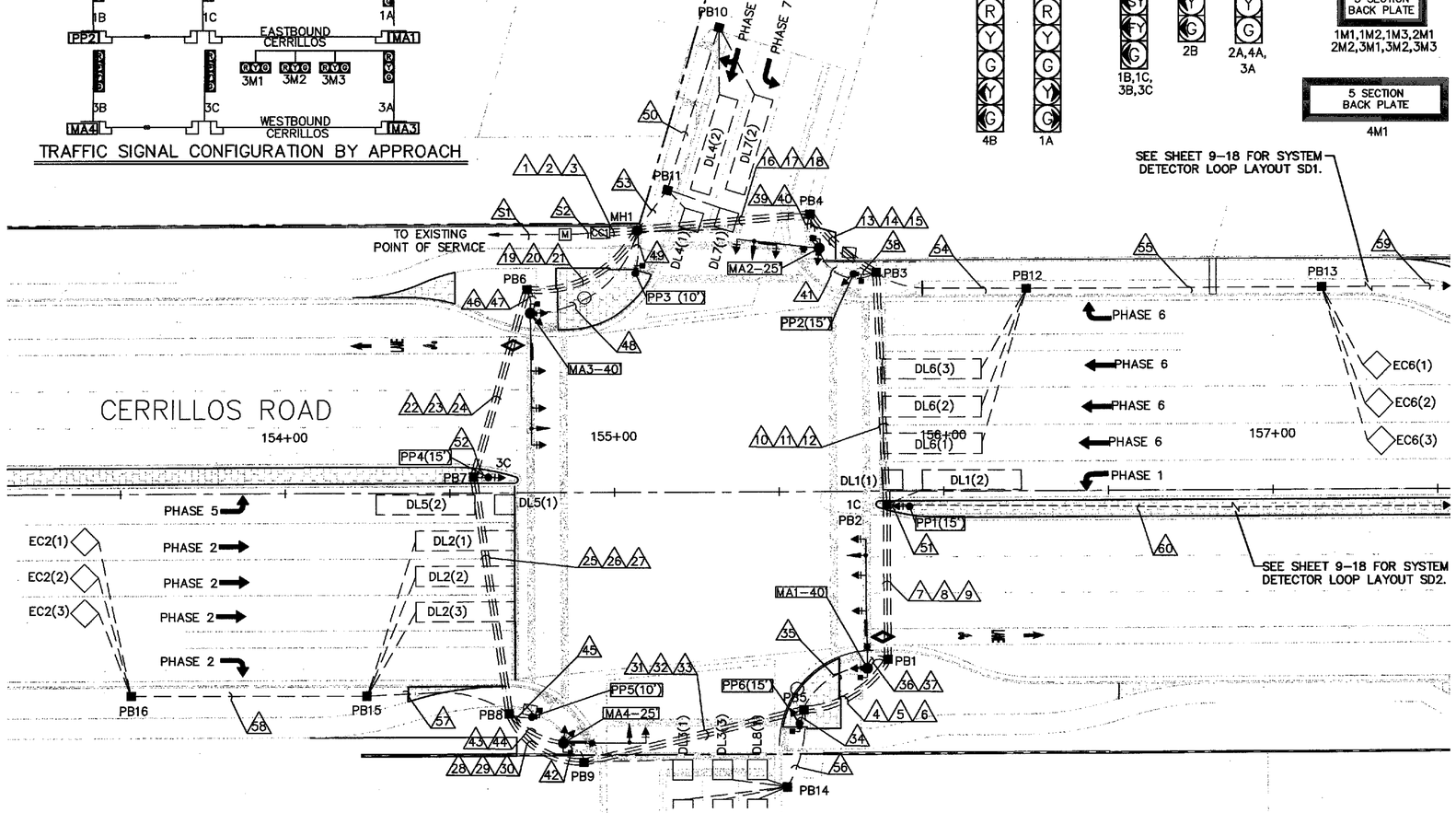

SIGNAL POLES AND MASTARMS

ID #	TYPE	STATION	OFFSET	LUMINAIRE ARM	MOUNTING HEIGHT
MA1	MASTARM - 40' TYPE III	155+76.52	54.01' RT	10'	40'
MA2	MASTARM - 25' TYPE III	155+62.49	73.63' LT	-	5'
MA3	MASTARM - 40' TYPE III	154+74.43	54.00' LT	-	5'
MA4	MASTARM - 25' TYPE III	154+84.19	75.91' RT	10'	40'
PP1	PEDESTAL POLE - 15'	155+89.52	4.69' RT		
PP2	PEDESTAL POLE - 15'	155+72.92	85.85' LT		
PP3	PEDESTAL POLE - 10'	155+06.69	66.32' LT		
PP4	PEDESTAL POLE - 15'	154+61.71	4.81' LT		
PP5	PEDESTAL POLE - 10'	154+74.85	68.12' RT		
PP6	PEDESTAL POLE - 15'	155+55.91	70.45' RT		
CC1	CONTROLLER CABINET 1	154+96.01	78.59' LT		

*STATIONS & OFFSETS REFERENCE CERRILLOS ROAD ALIGNMENT

SIGNAL PHASING

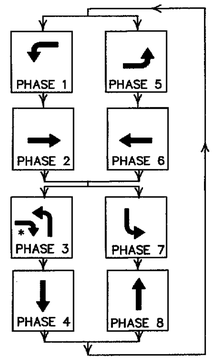

*RT OVERLAP

ILLUMINATED STREET NAME SIGNS

Cerrillos Rd

SP-101
MOUNTED ON MASTARMS 2 & 4

Lujan St

SP-102
MOUNTED ON MASTARMS 1 & 3

ABBREVIATIONS

MA#	MASTARM NUMBER
CC#	CONTROLLER CABINET NUMBER
PPB#	PEDESTRIAN PUSH BUTTON NUMBER
PB#	PULL BOX NUMBER (SIGNALS)
3A	SIGNAL HEAD NUMBER
P#	PEDESTRIAN SIGNAL NUMBER
MH#	MANHOLE
SGN	ILLUMINATED SIGN
DL#	DETECTOR LOOP
EC#	EXTENDED CALL LOOP DETECTOR
SD#	SYSTEM LOOP DETECTOR

SYMBOL KEY

MA#	MASTARM NO.
#	CONDUIT RUN ID (SIGNALS)
S#	CONDUIT RUN ID (POWER SERVICE)
PP#	PEDESTAL POLE NO.
M	METER (POWER)
CC#	CONTROLLER CABINET

NOTES

1. ALL EQUIPMENT SHALL BE CONSTRUCTED WITHIN EXISTING R.O.W.

2. ALL SIGNAL POLE AND MASTARM LOCATIONS SHALL BE FIELD VERIFIED PRIOR TO CONSTRUCTION AS PER CITY OF SANTA FE TRAFFIC OPERATIONS, 955-2320.

3. PULL BOXES 1 THROUGH 9 ARE STANDARD SIZE AND PULL BOXES 10 THROUGH 18 ARE LARGE SIZE.

4. MASTARM 2 AND MASTARM 3 SHALL BE INSTALLED WITH A 5' HIGH LUMINAIRE EXTENSION FOR MOUNTING OF THE ILLUMINATED STREET NAME SIGN. A LUMINAIRE ARM SHOULD NOT BE INSTALLED.

5. ILLUMINATED SIGNS SHALL BE MOUNTED PER MANUFACTURES SPECIFICATIONS ON THE LUMINAIRE EXTENSION.

FLASH CONDITION

RED BALL (1A, 1M1, 1M2, 1M3, 1B, 1C, 3A, 3M1, 3M2, 3M3, 3B, 3C)
RED BALL (2A, 2M1, 2M2, 2B, 4A, 4M1, 4B)

INITIALIZATION

ALL RED, THEN PHASES 2 AND 6 GREEN

PARSONS BRINCKERHOFF

CITY OF SANTA FE	SHEET
NEW MEXICO PROJECT NO.	NO.
CN S100130	9-4

NO.	DESCRIPTION	DATE	BY
3			
2			
1			

REVISIONS (OR CHANGE NOTICES)

PAUL F. STEFFIN NEW MEXICO 19352 REGISTERED PROFESSIONAL ENGINEER 10/6/2015

SCALE
1"=20' HORIZ.

DESIGNED BY: PB	DRAWN BY: PB	CHECKED BY: JB
DATE: 08/07/15	DATE: 08/07/15	DATE: 08/07/15

CITY OF SANTA FE

CERRILLOS ROAD PHASE IIC
CAMINO CARLOS REY TO
LLANO STREET
SANTA FE COUNTY

TRAFFIC SIGNAL PLAN
CERRILLOS ROAD/LUJAN STREET

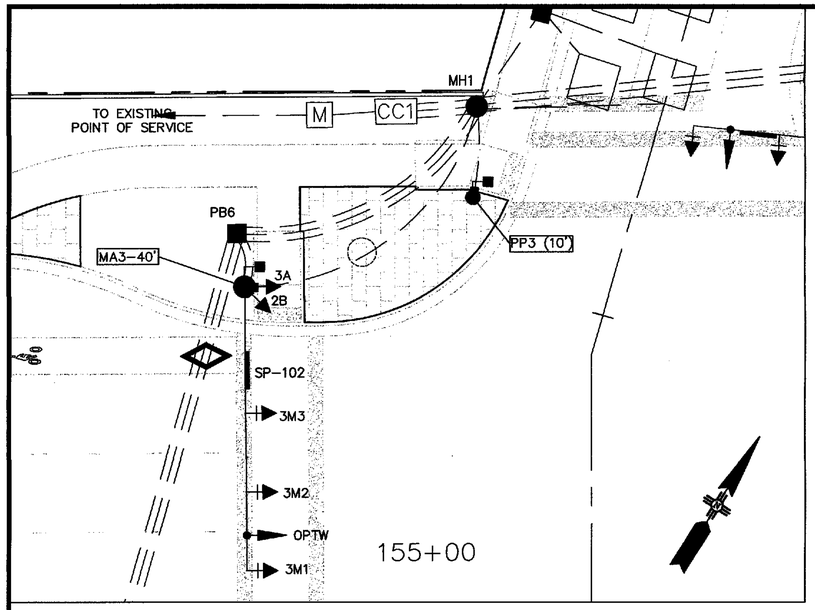

NW QUADRANT DETAIL
CERRILLOS ROAD/LUJAN STREET
SCALE: 1"=10'

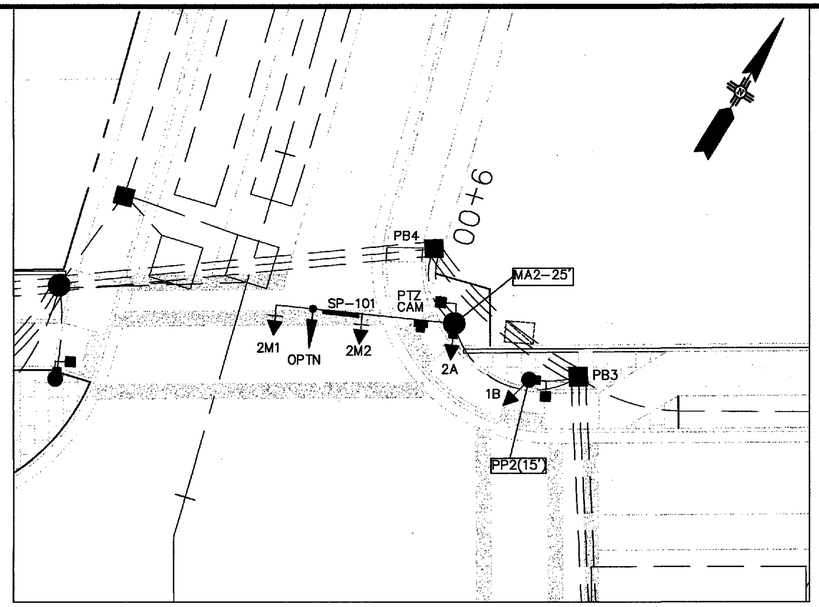

NE QUADRANT DETAIL
CERRILLOS ROAD/LUJAN STREET
SCALE: 1"=10'

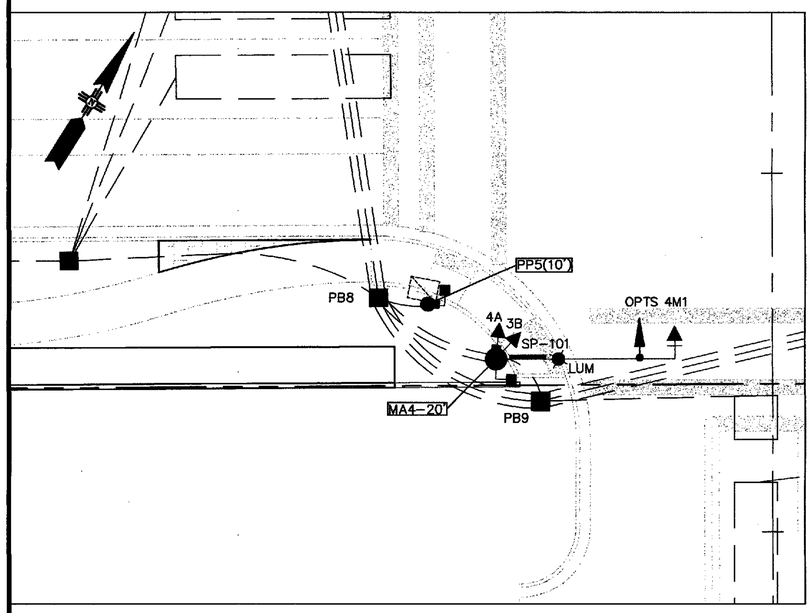

SW QUADRANT DETAIL
CERRILLOS ROAD/LUJAN STREET
SCALE: 1"=10'

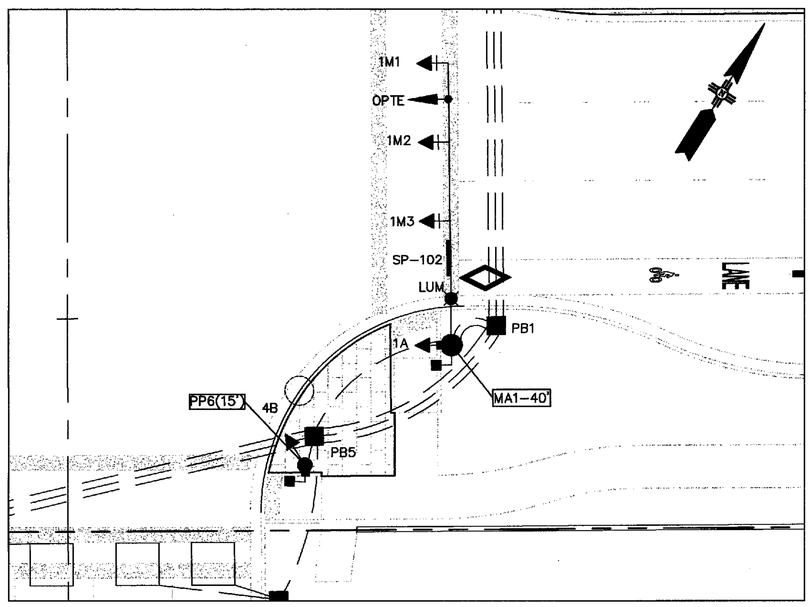

SE QUADRANT DETAIL
CERRILLOS ROAD/LUJAN STREET
SCALE: 1"=10'

PARSONS BRINCKERHOFF

CITY OF SANTA FE	SHEET
NEW MEXICO PROJECT NO.	NO.
CN S100130	9-5

ABBREVIATIONS

MA#	MASTARM NUMBER
CC#	CONTROLLER CABINET NUMBER
PPB#	PEDESTRIAN PUSH BUTTON NUMBER
PB#	PULL BOX NUMBER (SIGNALS)
3A	SIGNAL HEAD NUMBER
P#	PEDESTRIAN SIGNAL NUMBER
MH#	MANHOLE
SGN	ILLUMINATED SIGN

SYMBOL KEY

MA#	MASTARM NO.
#	CONDUIT RUN ID (SIGNALS)
S#	CONDUIT RUN ID (POWER SERVICE)
PP#	PEDESTAL POLE NO.
M	METER (POWER)
CC#	CONTROLLER CABINET

PEDESTRIAN SIGNAL & PUSH BUTTON IDENTIFICATION

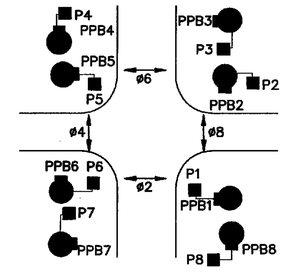

NO.	DESCRIPTION	DATE	BY
3			
2			
1			

REVISIONS (OR CHANGE NOTICES)

PAUL F. STEFFIN
NEW MEXICO
13602
REGISTERED PROFESSIONAL ENGINEER
10/7/2015

CITY OF SANTA FE

CERRILLOS ROAD PHASE IIC
CAMINO CARLOS REY TO
LLANO STREET
SANTA FE COUNTY

TRAFFIC SIGNAL PLAN
CERRILLOS ROAD/LUJAN STREET

SCALE
1"=20' HORIZ.

DESIGNED BY: PB	DRAWN BY: PB	CHECKED BY: JB
DATE: 08/07/15	DATE: 08/07/15	DATE: 08/07/15

J:\33693 Cerrillos Ph IIC\04 Engineering-33693\Plans\9_Sheets\9-5 LujanSignalBlowUp.dwg Sep 30, 2015 - 2:01pm Saved By: chavezdx

N.M. PROJECT NO. CN S100130 SHEET NO. 9-5

PARSONS BRINCKERHOFF

CITY OF SANTA FE	SHEET
NEW MEXICO PROJECT NO.	NO.
CN S100130	9–6

CONDUIT AND CONDUCTOR FILL REQUIREMENTS CONTINUED

RUN ID	CONDUIT RUN				CONDUCTOR LENGTH AND TYPE											
##	2"	3"	TYPE	REMARKS	MCC 5 (# @ FT)	MCC 7 (# @ FT)	MCC 20 (# @ FT)	SCC 2 (# @ FT)	SCC 6 (# @ FT)	SCC 8 (# @ FT)	SCC 10 (# @ FT)	DLLC (# @ FT)	OPTICOM (# @ FT)	VIDEO COAXIAL (# @ FT)	VIDEO CABLE (# @ FT)	
S1	200'		REC	EX POS TO METER				3 @ 205'								
S2	15'		REC	METER TO CC1				3 @ 20'								
1		10'	REC	CC1 TO MH1	2 @ 15'		2 @ 15'		1 @ 15'							
2		10'	REC	CC1 TO MH1						4 @ 15'	8 @ 15'	32 @ 15'	4 @ 15'	1 @ 15'	1 @ 15'	
3		10'	REC	CC1 TO MH1	2 @ 15'		2 @ 15'		1 @ 15'							
4		30'	REC	PB5 TO PB1	2 @ 35'		2 @ 35'		1 @ 35'							
5	30'		REC	PB5 TO PB1						1 @ 35'						
6		30'	REC	PB5 TO PB1						1 @ 35'						
7		50'	REC	PB1 TO PB2	2 @ 55'	1 @ 55'	2 @ 55'		1 @ 55'							
8	50'		REC	PB1 TO PB2						2 @ 55'	2 @ 55'		1 @ 55'			
9		50'	REC	PB1 TO PB2						1 @ 55'						
10		75'	REC	PB2 TO PB3	2 @ 80'		2 @ 80'		1 @ 80'							
11	75'		REC	PB2 TO PB3						2 @ 80'	2 @ 80'	5 @ 80'	1 @ 80'			
12		75'	REC	PB2 TO PB3						1 @ 80'						
13		30'	REC	PB3 TO PB4	2 @ 35'		2 @ 35'		1 @ 35'							
14		30'	REC	PB3 TO PB4						2 @ 35'	2 @ 35'	14 @ 35'	1 @ 35'			
15		30'	REC	PB3 TO PB4						1 @ 35'						
16		55'	REC	MH1 TO PB4	2 @ 60'		2 @ 60'		1 @ 60'							
17		55'	REC	MH1 TO PB4						2 @ 60'	4 @ 60'	14 @ 60'	2 @ 60'	1 @ 60'	1 @ 60'	
18		55'	REC	MH1 TO PB4						1 @ 60'						
19		40'	REC	MH1 TO PB6	2 @ 45'		2 @ 45'		1 @ 45'							
20		40'	REC	MH1 TO PB6						2 @ 45'	2 @ 45'	14 @ 45'	2 @ 45'			
21		40'	REC	MH1 TO PB6						1 @ 45'						
22		60'	REC	PB6 TO PB7	2 @ 65'	1 @ 65'	2 @ 65'		1 @ 65'							
23		60'	REC	PB6 TO PB7						2 @ 65'	2 @ 65'	14 @ 65'	1 @ 65'			
24		60'	REC	PB6 TO PB7						1 @ 65'						
25		75'	REC	PB7 TO PB8	2 @ 80'		2 @ 80'		1 @ 80'							
26	75'		REC	PB7 TO PB8						2 @ 80'	2 @ 80'	12 @ 80'	1 @ 80'			
27		75'	REC	PB7 TO PB8						1 @ 80'						
28		30'	REC	PB8 TO PB9	2 @ 35'		2 @ 35'		1 @ 35'							
29	30'		REC	PB8 TO PB9								6 @ 35'				
30		30'	REC	PB8 TO PB9						1 @ 35'						
31		70'	REC	PB9 TO PB5	2 @ 75'		2 @ 75'		1 @ 75'							
32	70'		REC	PB9 TO PB5								6 @ 75'				
33		70'	REC	PB9 TO PB5						1 @ 75'						
34		10'	REC	PB5 TO PP6	2 @ 15'	1 @ 15'										
35		25'	REC	PB5 TO MA1	4 @ 30'	1 @ 30'	2 @ 30'		1 @ 30'							
36		25'	REC	MA1 TO PB1	2 @ 30'	1 @ 30'	2 @ 30'		1 @ 30'							
37		10'	REC	MA1 TO PB1						2 @ 15'	2 @ 15'		1 @ 15'			
38		10'	REC	PB3 TO PP2	2 @ 15'	1 @ 15'										
39		25'	REC	PB4 TO MA2	2 @ 30'		2 @ 30'		1 @ 30'							
40		25'	REC	PB4 TO MA2							2 @ 30'		1 @ 30'	1 @ 30'	1 @ 30'	
41		15'	REC	MA2 TO PB3	4 @ 20'	1 @ 20'	2 @ 20'		1 @ 20'							
42		10'	REC	MA4 TO PB9	2 @ 15'		2 @ 15'		1 @ 15'							
43		20'	REC	PB8 TO MA4	4 @ 25'		2 @ 25'		1 @ 25'							
44		20'	REC	PB8 TO MA4						2 @ 25'	2 @ 25'		1 @ 25'			
45		10'	REC	PB8 TO PP5	2 @ 15'											
46		10'	REC	PB6 TO MA3	2 @ 15'	1 @ 15'	2 @ 15'		1 @ 15'							
47		10'	REC	PB6 TO MA3						2 @ 15'	2 @ 15'		1 @ 15'			
48		45'	REC	MH1 TO MA3	4 @ 50'		2 @ 50'		1 @ 50'							
49		15'	REC	MH1 TO PP3	2 @ 20'											
50		35'	REC	PB11 TO PB10								2 @ 40'				
51		10'	REC	PB2 TO PP1		1 @ 15'										
52		10'	REC	PB7 TO PP4		1 @ 15'										
53		10'	REC	MH1 TO PB11								4 @ 15'				
54		50'	REC	PB3 TO PB12								11 @ 55'				
55		365'	REC	PB12 TO PB13								6 @ 370'				
56		30'	REC	PB5 TO PB14								6 @ 35'				
57		45'	REC	PB8 TO PB15								6 @ 50'				
58		75'	REC	PB15 TO PB16								3 @ 80'				
59		275'	REC	PB13 TO PB17								3 @ 280'				
60		400'	REC	PB2 TO PB18								3 @ 405'				
SUB TOTAL	545'	2835'			2000'	275'	1620'	675'	810'	1610'	1250'	11140'	670'	105'	105'	

PAUL F. STEFFEN NEW MEXICO 12206 REGISTERED PROFESSIONAL ENGINEER 10/6/2015

NO.	DESCRIPTION	DATE	BY
3			
2			
1			

REVISIONS (OR CHANGE NOTICES)

CITY OF SANTA FE

CERRILLOS ROAD PHASE IIC
CAMINO CARLOS REY TO
LLANO STREET
SANTA FE COUNTY

TRAFFIC SIGNAL CABLES & CONDUITS
CERRILLOS ROAD/LUJAN STREET

SCALE N.T.S.

DESIGNED BY: PB	DRAWN BY: PB	CHECKED BY: JB
DATE: 08/07/15	DATE: 08/07/15	DATE: 08/07/15

PARSONS BRINCKERHOFF

CITY OF SANTA FE	SHEET
NEW MEXICO PROJECT NO.	NO.
CN S100130	9–7

CONDUIT AND CONDUCTOR FILL REQUIREMENTS CONTINUED

RUN ID	CONDUIT RUN				CONDUCTOR LENGTH AND TYPE										
##	2"	3"	TYPE	REMARKS	MCC 5 (# @ FT)	MCC 7 (# @ FT)	MCC 20 (# @ FT)	SCC 2 (# @ FT)	SCC 6 (# @ FT)	SCC 8 (# @ FT)	SCC 10 (# @ FT)	DLLC (# @ FT)	OPTICOM (# @ FT)	VIDEO COAXIAL (# @ FT)	VIDEO CABLE (# @ FT)
MA1				BASE TO 1M1	1 @ 65'										
MA1				BASE TO OPT									1 @ 60'		
MA1				BASE TO 1M2	1 @ 55'										
MA1				BASE TO 1M3	1 @ 45'										
MA1				BASE TO SP-102							2 @ 35'				
MA1				BASE TO LUM						2 @ 55'					
MA1				BASE TO 1A		1 @ 20'									
MA1				BASE TO P1	1 @ 15'										
MA1				BASE TO PPB1	1 @ 10'										
MA2				BASE TO 2M1	1 @ 50'										
MA2				BASE TO OPT									1 @ 45'		
MA2				BASE TO PTZ CAMERA										1 @ 50'	1 @ 50'
MA2				BASE TO 2M2	1 @ 40'										
MA2				BASE TO SP-101							2 @ 35'				
MA2				BASE TO 2A	1 @ 20'										
MA2				BASE TO P3	1 @ 15'										
MA2				BASE TO PPB3	1 @ 10'										
MA3				BASE TO 3M1	1 @ 65'										
MA3				BASE TO OPT									1 @ 60'		
MA3				BASE TO 3M2	1 @ 55'										
MA3				BASE TO 3M3	1 @ 45'										
MA3				BASE TO SP-102							2 @ 35'				
MA3				BASE TO 3A	1 @ 20'										
MA3				BASE TO 2B	1 @ 20'										
MA3				BASE TO P5	1 @ 15'										
MA3				BASE TO PPB5	1 @ 10'										
MA4				BASE TO 4M1		1 @ 45'									
MA4				BASE TO OPT									1 @ 40'		
MA4				BASE TO SP-101							2 @ 35'				
MA4				BASE TO LUM						2 @ 55'					
MA4				BASE TO 4A	1 @ 20'										
MA4				BASE TO 3B		1 @ 20'									
MA4				BASE TO P6	1 @ 15'										
MA4				BASE TO PPB6	1 @ 10'										
PP1				BASE TO 1C		1 @ 15'									
PP2				BASE TO 1B		1 @ 20'									
PP2				BASE TO P2	1 @ 15'										
PP2				BASE TO PPB2	1 @ 10'										
PP3				BASE TO P4	1 @ 15'										
PP3				BASE TO PPB4	1 @ 10'										
PP4				BASE TO 3C		1 @ 20'									
PP5				BASE TO P7	1 @ 15'										
PP5				BASE TO PPB7	1 @ 10'										
PP6				BASE TO 4B		1 @ 20'									
PP6				BASE TO P8	1 @ 15'										
PP6				BASE TO PPB8	1 @ 10'										
TOTALS	545'	2835'			2700'	435'	1620'	675'	810'	1830'	1530'	11140'	875'	155'	155'

PAUL F. STEFFIN NEW MEXICO 18392 REGISTERED PROFESSIONAL ENGINEER 10/14/2015

NO.	DESCRIPTION	DATE	BY
3			
2			
1			

REVISIONS (OR CHANGE NOTICES)

CITY OF SANTA FE

CERRILLOS ROAD PHASE IIC
CAMINO CARLOS REY TO
LLANO STREET
SANTA FE COUNTY

TRAFFIC SIGNAL CABLES & CONDUITS
CERRILLOS ROAD/LUJAN STREET

SCALE N.T.S.

DESIGNED BY: PB	DRAWN BY: PB	CHECKED BY: JB
DATE: 08/07/15	DATE: 08/07/15	DATE: 08/07/15

J:\33693 Cerrillos Ph IIC\04 Engineering–33693\Plans\9_Sheets\9–6_9–8FunctionChart–QuanLujan.dwg Sep 30, 2015 – 2:04pm Saved By: chavezdx

N.M. PROJECT NO. CN S100130 SHEET NO. 9–7

PARSONS BRINCKERHOFF

CITY OF SANTA FE	SHEET
NEW MEXICO PROJECT NO.	NO.
CN S100130	9–8

FUNCTION CHART - 115 VOLT CIRCUIT [1]

CONDUCTOR			RING 1 - MULTI CONDUCTOR CABLE 20		RING 2 - MULTI CONDUCTOR CABLE 20 [2]	
CONDUCTOR NUMBER	BASE COLOR	TRACER	FUNCTION	FIELD CONNECTION	FUNCTION	FIELD CONNECTION
1	BLACK	-	SPARE	SPARE	SPARE	SPARE
2	WHITE	-	SPARE	SPARE	SPARE	SPARE
3	RED	-	PHASE 1 RED	RED LEFT TURN ARROW 3B, 3C	PHASE 5 RED	RED LEFT TURN ARROW 1B, 1C
4	GREEN	-	PHASE 1 GREEN	GREEN LEFT TURN ARROW 3B, 3C	PHASE 5 GREEN	GREEN LEFT TURN ARROW 1B, 1C
5	ORANGE	-	PHASE 1 YELLOW	YELLOW LEFT TURN ARROW 3B, 3C	PHASE 5 YELLOW	YELLOW LEFT TURN ARROW 1B, 1C
6	BLUE	-	PHASE 1 FLASHING YELLOW	FLASHING YELLOW LEFT TURN ARROW 3B, 3C	PHASE 5 FLASHING YELLOW	FLASHING YELLOW LEFT TURN ARROW 1B, 1C
7	WHITE	BLACK	SPARE	SPARE	SPARE	SPARE
8	RED	BLACK	PHASE 2 RED	RED BALL 1M1, 1M2, 1M3, 1A	PHASE 6 RED	RED BALL 3M1, 3M2, 3M3, 3A
9	GREEN	BLACK	PHASE 2 GREEN	GREEN BALL 1M1, 1M2, 1M3, 1A	PHASE 6 GREEN	GREEN BALL 3M1, 3M2, 3M3, 3A
10	ORANGE	BLACK	PHASE 2 YELLOW	YELLOW BALL 1M1, 1M2, 1M3, 1A	PHASE 6 YELLOW	YELLOW BALL 3M1, 3M2, 3M3, 3A
11	BLUE	BLACK	PHASE 2 WALK	PEDESTRIAN WALK PB7, PB8	PHASE 6 WALK	PEDESTRIAN WALK PB3, PB4
12	BLACK	WHITE	PHASE 2 DON'T WALK	PEDESTRIAN DON'T WALK PB7, PB8	PHASE 6 DON'T WALK	PEDESTRIAN DON'T WALK PB3, PB4
13	RED	WHITE	PHASE 3 RED	RED LEFT TURN ARROW 2M1, 2B	SPARE	SPARE
14	GREEN	WHITE	PHASE 3 GREEN	GREEN LEFT TURN ARROW 2M1, 2B, 1A (LT OVERLAP)	PHASE 7 GREEN	GREEN LEFT TURN ARROW 4M1, 4B
15	BLUE	WHITE	PHASE 3 YELLOW	YELLOW LEFT TURN ARROW 2M1, 2B, 1A (LT OVERLAP)	PHASE 7 YELLOW	YELLOW LEFT TURN ARROW 4M1, 4B
16	BLACK	RED	PHASE 4 RED	RED BALL 4M1, 4A, 4B	PHASE 8 RED	RED BALL 2M2, 2A
17	WHITE	RED	PHASE 4 GREEN	GREEN BALL 4M1, 4A, 4B	PHASE 8 GREEN	GREEN BALL 2M2, 2A
18	ORANGE	RED	PHASE 4 YELLOW	YELLOW BALL 4M1, 4A, 4B	PHASE 8 YELLOW	YELLOW BALL 2M2, 2A
19	BLUE	RED	PHASE 4 WALK	PEDESTRIAN WALK PB5, PB6	PHASE 8 WALK	PEDESTRIAN WALK PB1, PB2
20	RED	GREEN	PHASE 4 DON'T WALK	PEDESTRIAN DON'T WALK PB5, PB6	PHASE 8 DON'T WALK	PEDESTRIAN DON'T WALK PB1, PB2

[1] IDENTIFY CONDUCTORS LISTED AS "115 VOLTS".

[2] WRAP RING 2 CABLE AT EACH SPLICE POINT WITH COLORED ELECTRICAL TAPE. THE IDENTIFICATION MARKING SHALL BE PROVIDED ON EACH RIGHT 2 CABLE AT EACH SPLICE AND LOCATED 6" BACK FROM THE END.

FUNCTION CHART - 24 VOLT CIRCUIT [3]

CONDUCTOR		RING 1 - MULTI CONDUCTOR CABLE 5		RING 2 - MULTI CONDUCTOR CABLE 5	
NUMBER	BASE COLOR	FUNCTION	FIELD CONNECTION	FUNCTION	FIELD CONNECTION
1	BLACK	PHASE 2	P7, P8	SPARE	SPARE
2	WHITE	COMMON	COMMON	COMMON	COMMON
3	RED	PHASE 4	P5, P6	SPARE	SPARE
4	GREEN	SPARE	SPARE	PHASE 6	P3, P4
5	ORANGE	SPARE	SPARE	PHASE 8	P1, P2

[3] IDENTIFY CONDUCTORS LISTED AS "PPB - LOW VOLTAGE" AT EACH SPLICE POINT. FIVE (5) CONDUCTOR CABLE SHALL BE 24 VOLTS AND USED FOR PUSH BUTTONS ONLY.

OPTICAL DETECTOR CABLE

FROM	TO	CONDUIT TRACE	TOTAL LENGTH
OPTN	CC1	MA2-40-17-2	150'
OPTS	CC1	MA4-44-28-23-20-2	270'
OPTE	CC1	MA1-36-32-29-26-23-20-2	405'
OPTW	CC1	MA3-47-20-2	135'
		TOTAL	960'

NOTES:

1/ IDENTIFY CONDUCTORS LISTED AS "115 VOLTS"

2/ WRAP RING 2 CABLE AT EACH SPLICE POINT WITH COLORED ELECTRICAL TAPE. THE IDENTIFICATION MARKING SHALL BE PROVIDED ON EACH RING 2 CABLE AT EACH SPLICE BOX AND LOCATED 6" BACK FROM THE END.

3/ IDENTIFY CONDUCTORS LISTED AS "PPB – LOW VOLTAGE" AT EACH SPLICE POINT. FIVE (5) CONDUCTOR CABLE SHALL BE 24 VOLTS AND USED FOR PUSH BUTTONS ONLY.

DETECTOR RACK ASSIGNMENTS I

UNIT NUMBER	POWER SUPPLY	1	2	3	4	5	6	7	8	9	10	11	12	13	14	15	16	17
CHANNEL 1		Φ1	Φ2	Φ6	Φ2 EC	Φ3	Φ4	Φ8	Φ4 EC	DUAL LEFT Φ1	DUAL LEFT Φ3	SD 1	SD 3	SD 5	SD 7	SD 9	PED ISOLATION	OPTICOM 1
CHANNEL 2		Φ5	Φ2	Φ6	Φ6 EC	Φ7	Φ4	Φ8	Φ8 EC	DUAL LEFT Φ5	DUAL LEFT Φ7	SD 2	SD 4	SD 6	SD 8	SD 10		OPTICOM 2
DETECTOR MODULE REQUIRED	*	X	X	X	X	X	X	X			X	X						X

DETECTOR LOOPS

LOOP ID	VEHICLE DETECTOR				LOOP TYPE	LOOP DIMENSIONS				LOOP WIRE (FT)	PAVEMENT SAWCUT
	MODE	CALL	UNIT #	CHANNEL		L	W	S	T		
DL1 (1)	PRESENCE		ONE	CH 1	QP	6	6	10	5	107'	40'
DL1 (2)	PRESENCE		ONE	CH 1	QP	30	6	10	5	299'	112'
DL2 (1)	PRESENCE		TWO	CH 1	QP	30	6	50	5	379'	152'
DL2 (2)	PRESENCE		TWO	CH 1	QP	30	6	40	5	359'	142'
DL2 (3)	PRESENCE		TWO	CH 1	QP	30	6	30	5	339'	132'
EC2 (1)	PRESENCE		FOUR	CH 1	QP	6	6	45	5	177'	75'
EC2 (2)	PRESENCE		FOUR	CH 1	QP	6	6	35	5	157'	65'
EC2 (3)	PRESENCE		FOUR	CH 1	QP	6	6	25	5	137'	55'
DL3 (1)	PRESENCE		FIVE	CH 1	QP	6	6	30	5	147'	60'
DL3 (2)	PRESENCE		FIVE	CH 1	QP	30	6	30	5	339'	132'
DL3 (3)	PRESENCE		TEN	CH 1	QP	6	6	15	5	117'	45'
DL3 (4)	PRESENCE		TEN	CH 1	QP	30	6	20	5	319'	122'
DL4 (1)	PRESENCE		SIX	CH 1	QP	30	6	10	5	299'	112'
DL4 (2)	PRESENCE		SIX	CH 1	QP	30	6	10	10	309'	112'
DL5 (1)	PRESENCE		ONE	CH 2	QP	6	6	10	5	107'	40'
DL5 (2)	PRESENCE		ONE	CH 2	QP	30	6	10	5	299'	112'
DL6 (1)	PRESENCE		THREE	CH 1	QP	30	6	25	5	329'	127'
DL6 (2)	PRESENCE		THREE	CH 1	QP	30	6	35	5	349'	137'
DL6 (3)	PRESENCE		THREE	CH 1	QP	30	6	50	5	379'	152'
EC6 (1)	PRESENCE		FOUR	CH 2	QP	6	6	25	5	137'	55'
EC6 (2)	PRESENCE		FOUR	CH 2	QP	6	6	35	5	157'	65'
EC6 (3)	PRESENCE		FOUR	CH 2	QP	6	6	45	5	177'	75'
DL7 (1)	PRESENCE		FIVE	CH 2	QP	6	6	20	10	137'	50'
DL7 (2)	PRESENCE		FIVE	CH 2	QP	30	6	25	5	329'	127'
DL8 (1)	PRESENCE		SEVEN	CH 1	QP	30	6	5	5	289'	107'
DL8 (2)	PRESENCE		SEVEN	CH 1	QP	6	6	10	5	107'	40'
SD1 (1)	PRESENCE		ELEVEN	CH 1	QP	6	6	25	5	137'	55'
SD1 (2)	PRESENCE		ELEVEN	CH 1	QP	6	6	35	5	157'	65'
SD1 (3)	PRESENCE		ELEVEN	CH 1	QP	6	6	45	5	177'	75'
SD2 (1)	PRESENCE		ELEVEN	CH 2	QP	6	6	10	15	127'	40'
SD2 (2)	PRESENCE		ELEVEN	CH 2	QP	6	6	20	10	137'	50'
SD2 (3)	PRESENCE		ELEVEN	CH 2	QP	6	6	35	10	167'	65'
TOTALS										6280'	2450'

QUANTITIY ESTIMATING ASSUMPTIONS

LOOPWIRE
6'X6' QUADRUPOLE LOOP=(8xL)+(4xW)+(2xS)+(2xT)+5 =77+[2x(S+T)]
6'X30' QUADRUPOLE LOOP=(8xL)+(4xW)+(2xS)+(2xT)+5 =269+[2x(S+T)]
6'X40' QUADRUPOLE LOOP=(8xL)+(4xW)+(2xS)+(2xT)+5 =349+[2x(S+T)]

PAVEMENT SAWCUT
6'X6' QUADRUPOLE LOOP=(3xL)+(2xW)+(2xS)+S=35+S
6'X30' QUADRUPOLE LOOP=(3xL)+(2xW)+(2xS)+S=102+S
6'X40' QUADRUPOLE LOOP=(3xL)+(2xW)+(2xS)+S=132+S

WHERE
L=DETECTOR LOOP LENGTH (FROM PLANS)
W=DETECTOR LOOP WIDTH (FROM PLANS)
S=SAWCUT LENGTH FROM DETECTOR LOOP TO FACE OF CURB (FROM PLANS)
T=LOOP WIRE TERMINAL LENGTH FROM FACE OF CURB TO PULL BOX (FROM PLANS)

PAUL F. STEFFIN NEW MEXICO 16532 REGISTERED PROFESSIONAL ENGINEER 10/1/2015

NO.	DESCRIPTION	DATE	BY
3			
2			
1			

REVISIONS (OR CHANGE NOTICES)

CITY OF SANTA FE

CERRILLOS ROAD PHASE IIC
CAMINO CARLOS REY TO
LLANO STREET
SANTA FE COUNTY

TRAFFIC SIGNAL FUNCTION
CHARTS & SIGNAL QUANTITIES
CERRILLOS ROAD/LUJAN STREET

SCALE
N.T.S.

DESIGNED BY: PB	DRAWN BY: PB	CHECKED BY: JB
DATE: 08/07/15	DATE: 08/07/15	DATE: 08/07/15

PARSONS BRINCKERHOFF

CITY OF SANTA FE	SHEET
NEW MEXICO PROJECT NO.	NO.
CN S100130	9-9

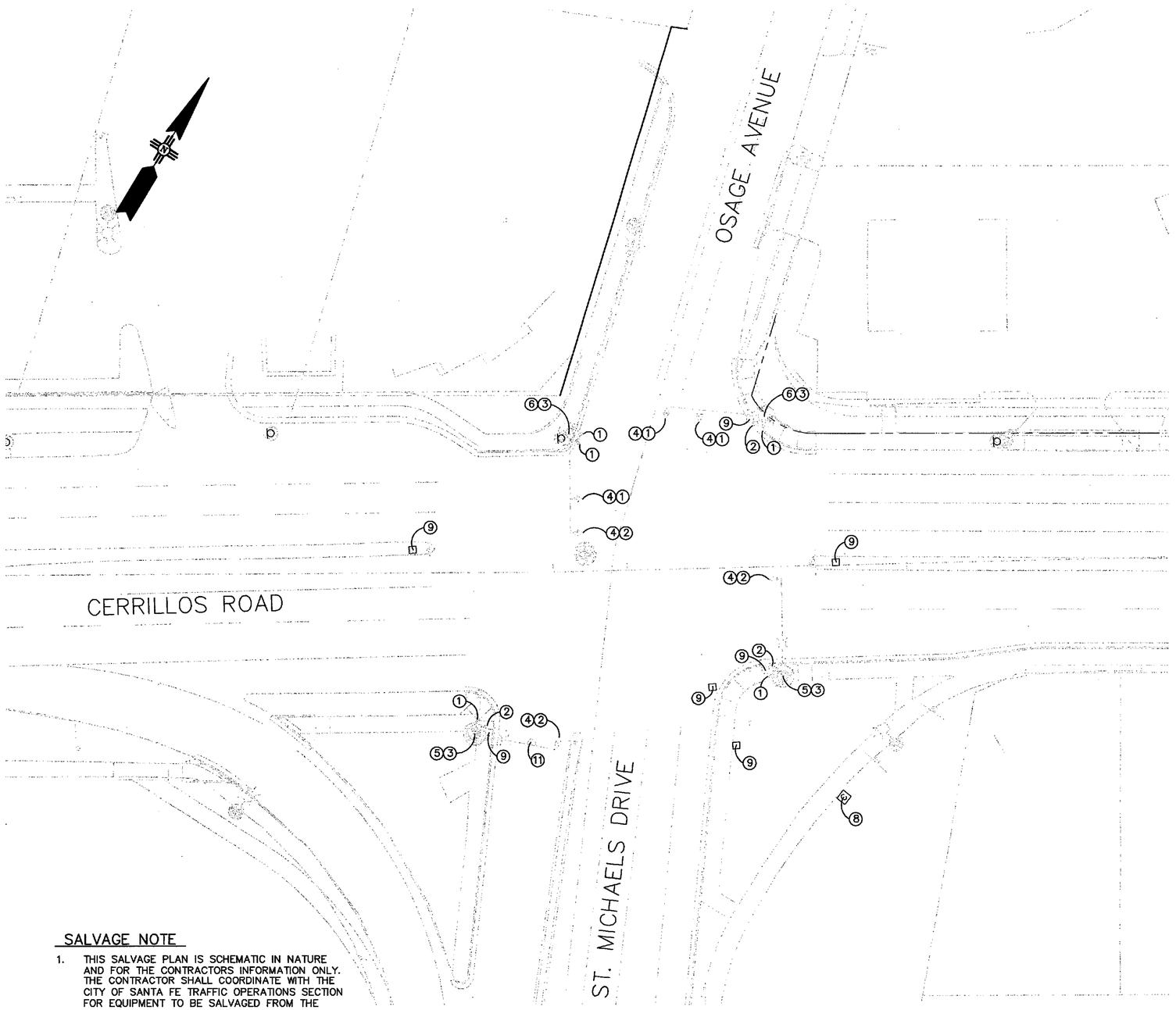

NOTES

1. REMOVE AND SALVAGE EXISTING 3-SECTION TRAFFIC SIGNAL ASSEMBLY.
2. REMOVE AND SALVAGE EXISTING 5-SECTION TRAFFIC SIGNAL ASSEMBLY.
3. REMOVE AND SALVAGE EXISTING PEDESTRIAN SIGNAL ASSEMBLIES AND PUSH BUTTONS.
4. REMOVE AND SALVAGE EXISTING BACKPLATE.
5. REMOVE AND SALVAGE EXISTING TYPE III MASTARM POLE, FOUNDATION, AND LUMINAIRE.
6. REMOVE AND SALVAGE EXISTING TYPE II MASTARM POLE.
7. REMOVE AND SALVAGE EXISTING TYPE I PEDESTAL POLE.
8. REMOVE AND SALVAGE EXISTING CONTROLLER CABINET, FOUNDATION, AND SERVICE METER.
9. REMOVE AND DISPOSE EXISTING PULL BOX.
10. REMOVE AND SALVAGE EXISTING OPTICOM.
11. REMOVE AND SALVAGE RADAR DETECTION UNIT AND CABLE
12. REMOVE AND SALVAGE EXISTING 12 PAIR COMMUNICATION (INTERCONNECT).

EQUIPMENT SALVAGE LIST

8 EA	3-SECTION TRAFFIC SIGNAL ASSEMBLY
6 EA	5-SECTION TRAFFIC SIGNAL ASSEMBLY
8 EA	PEDESTRIAN SIGNAL ASSEMBLY
6 EA	BACKPLATE
2 EA	TYPE III MASTARM POLE AND LUMINAIRE
2 EA	TYPE II MASTARM POLE
1 EA	CONTROLLER CABINET
0 EA	OPTICAL DETECTOR
1 EA	RADAR DETECTION UNIT

SALVAGE NOTE

1. THIS SALVAGE PLAN IS SCHEMATIC IN NATURE AND FOR THE CONTRACTORS INFORMATION ONLY. THE CONTRACTOR SHALL COORDINATE WITH THE CITY OF SANTA FE TRAFFIC OPERATIONS SECTION FOR EQUIPMENT TO BE SALVAGED FROM THE TRAFFIC SIGNAL.
2. ALL EQUIPMENT, EXCEPT FOUNDATIONS WHICH SHALL BE DISPOSED OF, SHALL BE SALVAGED TO THE TRAFFIC SIGNAL SHOP AT 1142 SILER ROAD.

PAUL F. STEFFEN NEW MEXICO 18352 REGISTERED PROFESSIONAL ENGINEER 10/1/2015

NO.	DESCRIPTION	DATE	BY
3			
2			
1			

REVISIONS (OR CHANGE NOTICES)

CITY OF SANTA FE

CERRILLOS ROAD PHASE IIC
CAMINO CARLOS REY TO
LLANO STREET
SANTA FE COUNTY

TRAFFIC SIGNAL REMOVAL PLAN
CERRILLOS ROAD/ST. MICHAELS DRIVE

SCALE
1"=20' HORIZ.

DESIGNED BY: PB	DRAWN BY: PB	CHECKED BY: JB
DATE: 08/07/15	DATE: 08/07/15	DATE: 08/07/15

J:\33693 Cerrillos Ph IIC\04 Engineering-33693\Plans\9_Sheets\9-9 Traffic Removal Plan St Mikes.dwg Sep 30, 2015 - 2:07pm Saved By: chavezdx

N.M. PROJECT NO. CN S100130 SHEET NO. 9-9

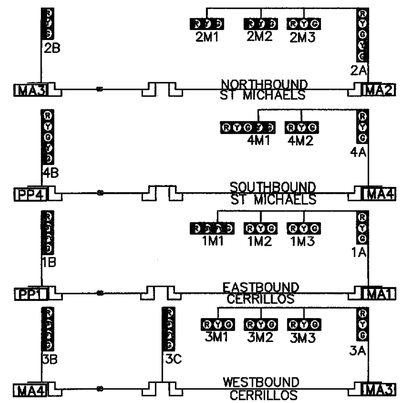

TRAFFIC SIGNAL CONFIGURATION BY APPROACH

TYPICAL SIGNAL FACE LENS ARRANGEMENTS

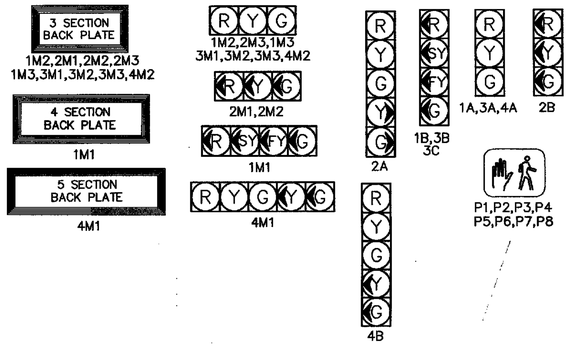

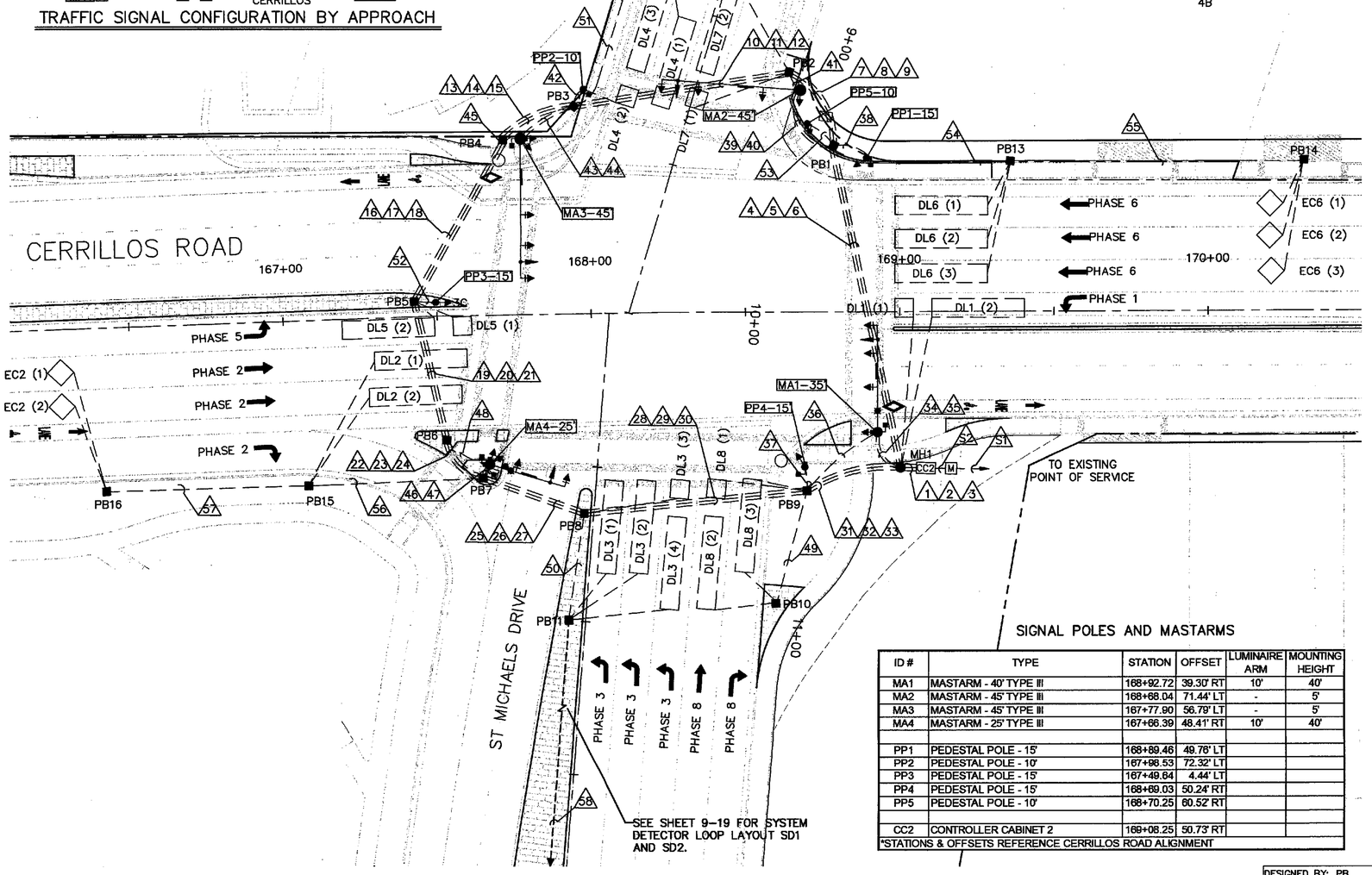

SIGNAL PHASING

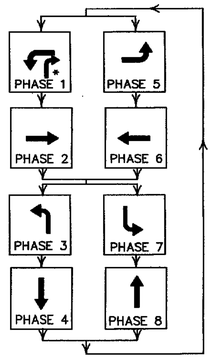

*RT OVERLAP

ILLUMINATED STREET NAME SIGNS

Cerrillos Rd

SP-101
MOUNTED ON MASTARMS 2 & 4

← St Michaels Dr
Osage Ave →

SP-103
MOUNTED ON MASTARM 3

← Osage Ave
St Michaels Dr →

SP-104
MOUNTED ON MASTARM 1

SIGNAL POLES AND MASTARMS

ID #	TYPE	STATION	OFFSET	LUMINAIRE ARM	MOUNTING HEIGHT
MA1	MASTARM - 40' TYPE III	168+92.72	39.30' RT	10'	40'
MA2	MASTARM - 45' TYPE III	168+68.04	71.44' LT	-	5'
MA3	MASTARM - 45' TYPE III	167+77.90	56.79' LT	-	5'
MA4	MASTARM - 25' TYPE III	167+66.39	48.41' RT	10'	40'
PP1	PEDESTAL POLE - 15'	168+89.46	49.78' LT		
PP2	PEDESTAL POLE - 10'	167+86.53	72.32' LT		
PP3	PEDESTAL POLE - 15'	167+49.64	4.44' LT		
PP4	PEDESTAL POLE - 15'	168+89.03	50.24' RT		
PP5	PEDESTAL POLE - 10'	168+70.25	60.52' RT		
CC2	CONTROLLER CABINET 2	169+08.25	50.73' RT		

*STATIONS & OFFSETS REFERENCE CERRILLOS ROAD ALIGNMENT

ABBREVIATIONS

MA#	MASTARM NUMBER
CC#	CONTROLLER CABINET NUMBER
PPB#	PEDESTRIAN PUSH BUTTON NUMBER
PB#	PULL BOX NUMBER (SIGNALS)
3A	SIGNAL HEAD NUMBER
P#	PEDESTRIAN SIGNAL NUMBER
MH#	MANHOLE
SGN	ILLUMINATED SIGN
DL#	DETECTOR LOOP
EC#	EXTENDED CALL LOOP DETECTOR
SD#	SYSTEM LOOP DETECTOR

SYMBOL KEY

- MA# — MASTARM NO.
- # — CONDUIT RUN ID (SIGNALS)
- S# — CONDUIT RUN ID (POWER SERVICE)
- PP# — PEDESTAL POLE NO.
- M — METER (POWER)
- CC# — CONTROLLER CABINET

NOTES

1. ALL EQUIPMENT SHALL BE CONSTRUCTED WITHIN EXISTING R.O.W.
2. ALL SIGNAL POLE AND MASTARM LOCATIONS SHALL BE FIELD VERIFIED PRIOR TO CONSTRUCTION AS PER CITY OF SANTA FE TRAFFIC OPERATIONS, 955-2320.
3. PULL BOXES 1 THROUGH 9 ARE STANDARD SIZE AND PULL BOXES 10 THROUGH 18 ARE LARGE SIZE.
4. MASTARM 2 AND MASTARM 3 SHALL BE INSTALLED WITH A 5' HIGH LUMINAIRE EXTENSION FOR MOUNTING OF THE ILLUMINATED STREET NAME SIGN. A LUMINAIRE ARM SHOULD NOT BE INSTALLED.
5. ILLUMINATED SIGNS SHALL BE MOUNTED PER MANUFACTURES SPECIFICATIONS ON THE LUMINAIRE EXTENSION.

FLASH CONDITION

RED BALL (1A, 1M1, 1M2, 1M3, 1B, 3A, 3M1, 3M2, 3M3, 3B, 3C)
RED BALL (2A, 2M1, 2M2, 2M3, 2B, 4A, 4M1, 4M2, 4B,)

INITIALIZATION

ALL RED, THEN PHASES 2 AND 6 GREEN

PAUL F. STEFFIN — NEW MEXICO — 18332 — 10/14/2015 — REGISTERED PROFESSIONAL ENGINEER

NO.	DESCRIPTION	DATE	BY
3			
2			
1			

REVISIONS (OR CHANGE NOTICES)

SCALE 1"=20' HORIZ.

DESIGNED BY: PB	DRAWN BY: PB	CHECKED BY: JB
DATE: 08/07/15	DATE: 08/07/15	DATE: 08/07/15

CITY OF SANTA FE

CERRILLOS ROAD PHASE IIC
CAMINO CARLOS REY TO
LLANO STREET
SANTA FE COUNTY

TRAFFIC SIGNAL PLAN
CERRILLOS ROAD/ST. MICHAELS DRIVE

PARSONS BRINCKERHOFF

CITY OF SANTA FE	SHEET
NEW MEXICO PROJECT NO.	NO.
CN S100130	9-10

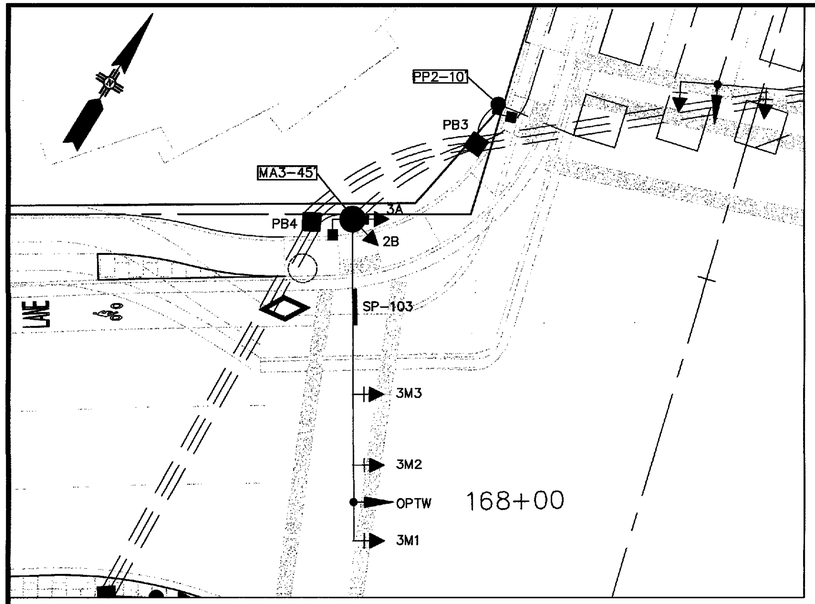

NW QUADRANT DETAIL
CERRILLOS ROAD/ST. MICHAELS DRIVE
SCALE: 1"=10'

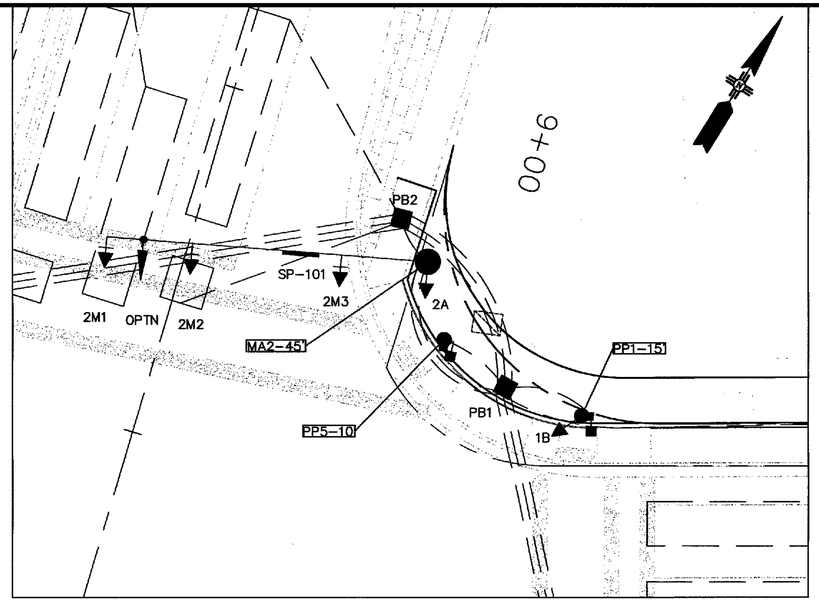

NE QUADRANT DETAIL
CERRILLOS ROAD/ST. MICHAELS DRIVE
SCALE: 1"=10'

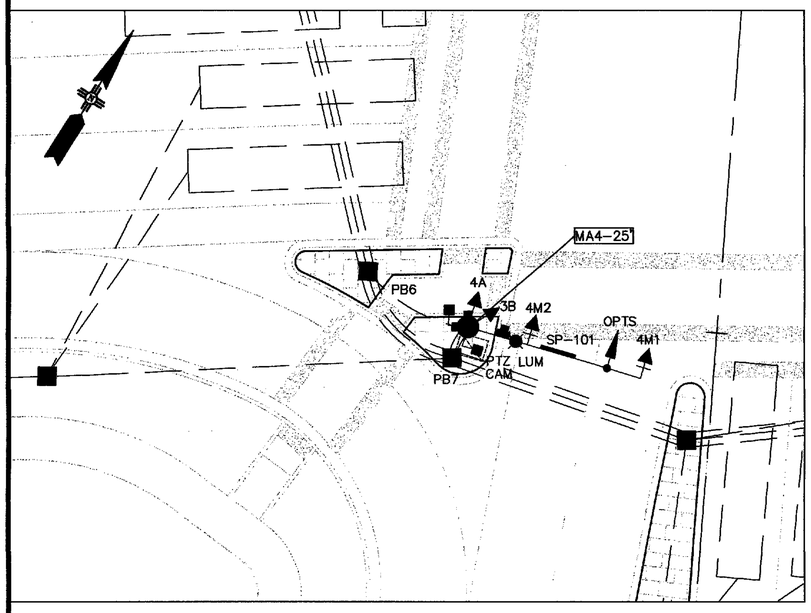

SW QUADRANT DETAIL
CERRILLOS ROAD/ST. MICHAEL DRIVE
SCALE: 1"=10'

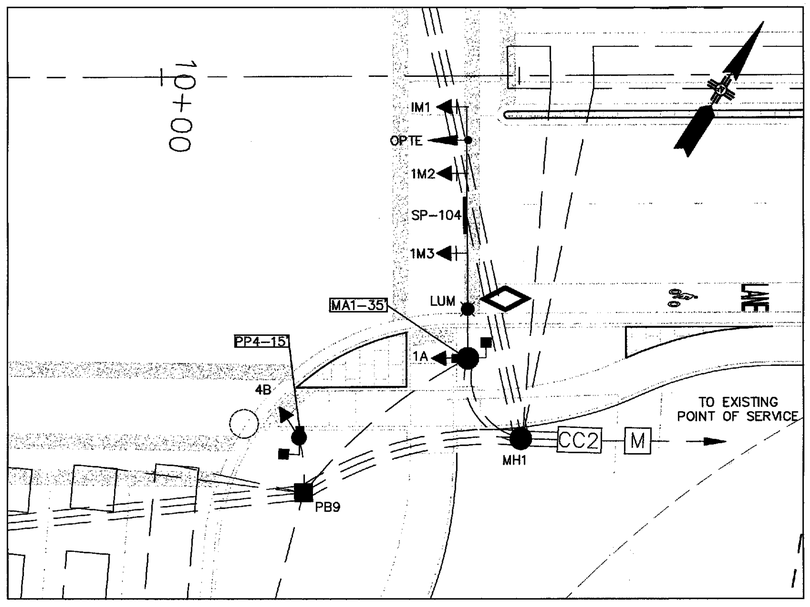

SE QUADRANT DETAIL
CERRILLOS ROAD/ST. MICHAELS DRIVE
SCALE: 1"=10'

PARSONS BRINCKERHOFF

CITY OF SANTA FE	SHEET
NEW MEXICO PROJECT NO.	NO.
CN S100130	9–11

ABBREVIATIONS

MA#	MASTARM NUMBER
CC#	CONTROLLER CABINET NUMBER
PPB#	PEDESTRIAN PUSH BUTTON NUMBER
PB#	PULL BOX NUMBER (SIGNALS)
3A	SIGNAL HEAD NUMBER
P#	PEDESTRIAN SIGNAL NUMBER
MH#	MANHOLE
SGN	ILLUMINATED SIGN

SYMBOL KEY

MA#	MASTARM NO.
#	CONDUIT RUN ID (SIGNALS)
S#	CONDUIT RUN ID (POWER SERVICE)
PP#	PEDESTAL POLE NO.
M	METER (POWER)
CC#	CONTROLLER CABINET

PEDESTRIAN SIGNAL & PUSH BUTTON IDENTIFICATION

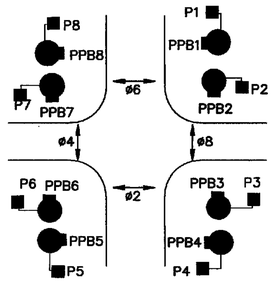

NO.	DESCRIPTION	DATE	BY
3			
2			
1			

REVISIONS (OR CHANGE NOTICES)

PAUL F. STEFFIN
NEW MEXICO
REGISTERED PROFESSIONAL ENGINEER
10/6/2015

CITY OF SANTA FE

CERRILLOS ROAD PHASE IIC
CAMINO CARLOS REY TO
LLANO STREET
SANTA FE COUNTY

TRAFFIC SIGNAL PLAN
CERRILLOS ROAD/ST. MICHAELS DRIVE

SCALE
1"=20' HORIZ.

DESIGNED BY: PB	DRAWN BY: PB	CHECKED BY: JB
DATE: 08/07/15	DATE: 08/07/15	DATE: 08/07/15

J:\33693 Cerrillos Ph IIC\04 Engineering–33693\Plans\9_Sheets\9–11 StMichaelsSignalBlowUp.dwg Sep 30, 2015 – 2:09pm Saved By: chavezdx

N.M. PROJECT NO. CN S100130 SHEET NO. 9–11

PARSONS BRINCKERHOFF

CITY OF SANTA FE	SHEET
NEW MEXICO PROJECT NO.	NO.
CN S100130	9–12

CONDUIT AND CONDUCTOR FILL REQUIREMENTS CONTINUED

RUN ID	CONDUIT RUN				CONDUCTOR LENGTH AND TYPE											
					MCC 5	MCC 7	MCC 20	SCC 2	SCC 6	SCC 8	SCC 10	DLLC	OPTICOM	VIDEO COAXIAL	VIDEO CABLE	
##	2"	3"	TYPE	REMARKS	(# @ FT)	(# @ FT)	(# @ FT)	(# @ FT)	(# @ FT)	(# @ FT)	(# @ FT)	(# @ FT)	(# @ FT)	(# @ FT)	(# @ FT)	
S1	200'		REC	EX POS TO METER				3 @ 205'								
S2	15'		REC	METER TO CC2				3 @ 20'								
1		25'	REC	CC2 TO MH1	2 @ 30'		2 @ 30'		1 @ 30'							
2		25'	REC	CC2 TO MH1						4 @ 30'	8 @ 30'	32 @ 30'	4 @ 30'	1 @ 30'	1 @ 30'	
3		25'	REC	CC2 TO MH1	2 @ 30'		2 @ 30'		1 @ 30'							
4		105'	REC	MH1 TO PB1	2 @ 110'		2 @ 110'		1 @ 110'							
5		105'	REC	MH1 TO PB1							4 @ 110'	11 @ 110'	2 @ 110'			
6		105'	REC	MH1 TO PB1						1 @ 110'						
7		30'	REC	PB1 TO PB2	2 @ 35'		2 @ 35'		1 @ 35'							
8	30'		REC	PB1 TO PB2							2 @ 35'	5 @ 35'	1 @ 35'			
9		30'	REC	PB1 TO PB2						1 @ 35'						
10		75'	REC	PB2 TO PB3	2 @ 80'		2 @ 80'		1 @ 80'							
11	75'		REC	PB2 TO PB3							2 @ 80'	3 @ 80'	1 @ 80'			
12		75'	REC	PB2 TO PB3						1 @ 80'						
13		30'	REC	PB3 TO PB4	2 @ 35'		2 @ 35'		1 @ 35'							
14	30'		REC	PB3 TO PB4						1 @ 35'						
15		30'	REC	PB3 TO PB4						1 @ 35'						
16		50'	REC	PB4 TO PB5	2 @ 55'	1 @ 55'	2 @ 55'		1 @ 55'							
17	50'		REC	PB4 TO PB5						1 @ 55'						
18		50'	REC	PB4 TO PB5						1 @ 55'						
19		45'	REC	PB5 TO PB6	2 @ 50'		2 @ 50'		1 @ 50'							
20	45'		REC	PB5 TO PB6								2 @ 50'				
21		45'	REC	PB5 TO PB6						1 @ 50'						
22		20'	REC	PB6 TO PB7	2 @ 25'		2 @ 25'		1 @ 25'							
23	20'		REC	PB6 TO PB7								2 @ 25'				
24		20'	REC	PB6 TO PB7						1 @ 25'						
25		35'	REC	PB7 TO PB8	2 @ 40'		2 @ 40'		1 @ 40'							
26	35'		REC	PB7 TO PB8						2 @ 40'	2 @ 40'	6 @ 40'	1 @ 40'	1 @ 40'	1 @ 40'	
27		35'	REC	PB7 TO PB8						1 @ 40'						
28		75'	REC	PB8 TO PB9	2 @ 80'		2 @ 80'		1 @ 80'							
29	75'		REC	PB8 TO PB9						2 @ 80'	2 @ 80'	16 @ 80'	1 @ 80'	1 @ 80'	1 @ 80'	
30		75'	REC	PB8 TO PB9						1 @ 80'						
31		35'	REC	PB9 TO MH1	2 @ 40'	1 @ 40'	2 @ 40'		1 @ 40'							
32		35'	REC	PB9 TO MH1						2 @ 40'	2 @ 40'	19 @ 40'	1 @ 40'	1 @ 40'	1 @ 40'	
33		35'	REC	PB9 TO MH1						1 @ 40'						
34		20'	REC	MH1 TO MA1	2 @ 25'	1 @ 25'	2 @ 25'		1 @ 25'							
35		20'	REC	MH1 TO MA1						2 @ 25'	2 @ 25'		1 @ 25'			
36		30'	REC	MA1 TO PB9	4 @ 35'	1 @ 35'	2 @ 35'		1 @ 35'							
37		10'	REC	PB9 TO PP4	2 @ 15'	1 @ 15'										
38		15'	REC	PB1 TO PP1	2 @ 20'	1 @ 20'										
39		25'	REC	PB1 TO MA2	6 @ 30'	1 @ 30'	2 @ 30'		1 @ 30'							
40		25'	REC	PB1 TO MA2							2 @ 30'		1 @ 30'			
41		10'	REC	MA2 TO PB2	2 @ 15'		2 @ 15'		1 @ 15'							
42		10'	REC	PB3 TO PP2	2 @ 15'											
43		20'	REC	PB3 TO MA3	4 @ 25'		2 @ 25'		1 @ 25'							
44		20'	REC	PB3 TO MA3							2 @ 25'		1 @ 25'			
45		15'	REC	MA3 TO PB4	2 @ 20'	1 @ 20'	2 @ 20'		1 @ 20'							
46		10'	REC	PB7 TO MA4	2 @ 15'		2 @ 15'		1 @ 15'							
47		10'	REC	PB7 TO MA4						2 @ 15'	2 @ 15'		1 @ 15'	1 @ 15'	1 @ 15'	
48		20'	REC	MA4 TO PB6	2 @ 25'		2 @ 25'		1 @ 25'							
49		50'	REC	PB9 TO PB10								2 @ 55'				
50		35'	REC	PB8 TO PB11								9 @ 40'				
51		75'	REC	PB3 TO PB12								2 @ 80'				
52		10'	REC	PB5 TO PP3		1 @ 15'										
53		15'	REC	PB1 TO PP5	2 @ 20'											
54		60'	REC	PB1 TO PB13						1 @ 65'		6 @ 65'				
55		95'	REC	PB13 TO PB14						1 @ 100'		3 @ 100'				
56		55'	REC	PB7 TO PB15								4 @ 60'				
57		75'	REC	PB15 TO PB16								2 @ 80'				
58		375'	REC	PB11 TO PB17								6 @ 380'				
SUB TOTAL	575'	2320'			1980'	255'	1600'	675'	800'	1325'	1420'	9015'	710'	205'	205'	

PAUL F. STEFFIN — NEW MEXICO — 10392 — 10/4/2015 — REGISTERED PROFESSIONAL ENGINEER

NO.	DESCRIPTION	DATE	BY
3			
2			
1			

REVISIONS (OR CHANGE NOTICES)

CITY OF SANTA FE

CERRILLOS ROAD PHASE IIC
CAMINO CARLOS REY TO
LLANO STREET
SANTA FE COUNTY

TRAFFIC SIGNAL CABLES & CONDUITS
CERRILLOS ROAD/ST. MICHAELS DRIVE

SCALE N.T.S.

DESIGNED BY: PB	DRAWN BY: PB	CHECKED BY: JB
DATE: 08/07/15	DATE: 08/07/15	DATE: 08/07/15

J:\33693 Cerrillos Ph IIC\04 Engineering–33693\Plans\9_Sheets\9–12_9–14 FunctionChart–QuanStMichaels.dwg Sep 30, 2015 – 2:10pm Saved By: chavezdx

N.M. PROJECT NO. CN S100130 SHEET NO. 9–12

PARSONS BRINCKERHOFF

CITY OF SANTA FE	SHEET
NEW MEXICO PROJECT NO.	NO.
CN S100130	9–13

CONDUIT AND CONDUCTOR FILL REQUIREMENTS CONTINUED

RUN ID	CONDUIT RUN				CONDUCTOR LENGTH AND TYPE										
##	2"	3"	TYPE	REMARKS	MCC 5 (# @ FT)	MCC 7 (# @ FT)	MCC 20 (# @ FT)	SCC 2 (# @ FT)	SCC 6 (# @ FT)	SCC 8 (# @ FT)	SCC 10 (# @ FT)	DLLC (# @ FT)	OPTICOM (# @ FT)	VIDEO COAXIAL (# @ FT)	VIDEO CABLE (# @ FT)
MA1				BASE TO 1M1		1 @ 60'									
MA1				BASE TO OPT									1 @ 55'		
MA1				BASE TO 1M2	1 @ 50'										
MA1				BASE TO 1M3	1 @ 45'										
MA1				BASE TO SP-104							2 @ 35'				
MA1				BASE TO LUM						2 @ 55'					
MA1				BASE TO 1A	1 @ 20'										
MA1				BASE TO P3	1 @ 15'										
MA1				BASE TO PPB3	1 @ 10'										
MA2				BASE TO 2M1	1 @ 65'										
MA2				BASE TO OPT									1 @ 60'		
MA2				BASE TO 2M2	1 @ 55'										
MA2				BASE TO 2M3	1 @ 50'										
MA2				BASE TO SP-101							2 @ 35'				
MA2				BASE TO 2A		1 @ 20'									
MA3				BASE TO 3M1	1 @ 70'										
MA3				BASE TO OPT									1 @ 65'		
MA3				BASE TO PTZ CAMERA										1 @ 70'	1 @ 70'
MA3				BASE TO 3M2	1 @ 60'										
MA3				BASE TO 3M3	1 @ 55'										
MA3				BASE TO SP-103							2 @ 35'				
MA3				BASE TO 3A	1 @ 20'										
MA3				BASE TO 2B	1 @ 20'										
MA3				BASE TO P7	1 @ 15'										
MA3				BASE TO PPB7	1 @ 10'										
MA4				BASE TO 4M1		1 @ 55'									
MA4				BASE TO OPT									1 @ 50'		
MA4				BASE TO 4M2	1 @ 45'										
MA4				BASE TO SP-101							2 @ 35'				
MA4				BASE TO LUM						2 @ 55'					
MA4				BASE TO 4A	1 @ 20'										
MA4				BASE TO 3B		1 @ 20'									
MA4				BASE TO P5	1 @ 15'										
MA4				BASE TO PPB5	1 @ 10'										
MA4				BASE TO P6	1 @ 15'										
MA4				BASE TO PPB6	1 @ 10'										
PP1				BASE TO 1B		1 @ 20'									
PP1				BASE TO P2	1 @ 15'										
PP1				BASE TO PPB2	1 @ 10'										
PP2				BASE TO P8	1 @ 15'										
PP2				BASE TO PPB8	1 @ 10'										
PP3				BASE TO 3C		1 @ 20'									
PP4				BASE TO 4B		1 @ 20'									
PP4				BASE TO P4	1 @ 15'										
PP4				BASE TO PPB4	1 @ 10'										
PP5				BASE TO P1	1 @ 15'										
PP5				BASE TO PPB1	1 @ 10'										
TOTALS	575'	2320'			2755'	470'	1600'	675'	800'	1545'	1700'	9015'	940'	275'	275'

PAUL F. STEFFEN NEW MEXICO 10/6/2015 REGISTERED PROFESSIONAL ENGINEER

NO.	DESCRIPTION	DATE	BY
3			
2			
1			

REVISIONS (OR CHANGE NOTICES)

CITY OF SANTA FE

CERRILLOS ROAD PHASE IIC
CAMINO CARLOS REY TO
LLANO STREET
SANTA FE COUNTY

TRAFFIC SIGNAL CABLES & CONDUITS
CERRILLOS ROAD/ST. MICHAELS DRIVE

SCALE N.T.S.

DESIGNED BY: PB	DRAWN BY: PB	CHECKED BY: JB
DATE: 08/07/15	DATE: 08/07/15	DATE: 08/07/15

PARSONS BRINCKERHOFF

CITY OF SANTA FE	SHEET
NEW MEXICO PROJECT NO.	NO.
CN S100130	9–14

FUNCTION CHART - 115 VOLT CIRCUIT [1]

CONDUCTOR			RING 1 - MULTI CONDUCTOR CABLE 20		RING 2 - MULTI CONDUCTOR CABLE 20 [2]	
CONDUCTOR NUMBER	BASE COLOR	TRACER	FUNCTION	FIELD CONNECTION	FUNCTION	FIELD CONNECTION
1	BLACK	-	SPARE	SPARE	SPARE	SPARE
2	WHITE	-	SPARE	SPARE	SPARE	SPARE
3	RED	-	PHASE 1 RED	RED LEFT TURN ARROW 3B, 3C	PHASE 5 RED	RED LEFT TURN ARROW 1M1, 1B
4	GREEN	-	PHASE 1 GREEN	GREEN LEFT TURN ARROW 3B, 3C, 2A (LT OVERLAP)	PHASE 5 GREEN	GREEN LEFT TURN ARROW 1M1, 1B
5	ORANGE	-	PHASE 1 YELLOW	YELLOW LEFT TURN ARROW 3B, 3C, 2A (LT OVERLAP)	PHASE 5 YELLOW	YELLOW LEFT TRUN ARROW 1M1, 1B
6	BLUE	-	PHASE 1 FLASHING YELLOW	FLASHING YELLOW LEFT TURN ARROW 3B, 3C	PHASE 5 FLASHING YELLOW	FLASHING YELLOW LEFT TURN ARROW 1M1, 1B
7	WHITE	BLACK	SPARE	SPARE	SPARE	SPARE
8	RED	BLACK	PHASE 2 RED	RED BALL 1M2, 1M3, 1A	PHASE 6 RED	RED BALL 3M1, 3M2, 3M3, 3A
9	GREEN	BLACK	PHASE 2 GREEN	GREEN BALL 1M2, 1M3, 1A	PHASE 6 GREEN	GREEN BALL 3M1, 3M2, 3M3, 3A
10	ORANGE	BLACK	PHASE 2 YELLOW	YELLOW BALL 1M2, 1M3, 1A	PHASE 6 YELLOW	YELLOW BALL 3M1, 3M2, 3M3, 3A
11	BLUE	BLACK	PHASE 2 WALK	PEDESTRIAN WALK P4, P5	PHASE 6 WALK	PEDESTRIAN WALK P1, P8
12	BLACK	WHITE	PHASE 2 DON'T WALK	PEDESTRIAN DON'T WALK P4, P5	PHASE 6 DON'T WALK	PEDESTRIAN DON'T WALK P1, P8
13	RED	WHITE	PHASE 3 RED	RED LEFT TURN ARROW 2M1, 2M2, 2B	SPARE	SPARE
14	GREEN	WHITE	PHASE 3 GREEN	GREEN LEFT TURN ARROW 2M1, 2M2, 2B	PHASE 7 GREEN	GREEN LEFT TURN ARROW 4M1, 4B
15	BLUE	WHITE	PHASE 3 YELLOW	YELLOW LEFT TURN ARROW 2M1, 2M2, 2B	PHASE 7 YELLOW	YELLOW LEFT TRUN ARROW 4M1, 4B
16	BLACK	RED	PHASE 4 RED	RED BALL 4M1, 4M2, 4A, 4B	PHASE 8 RED	RED BALL 2M3, 2A
17	WHITE	RED	PHASE 4 GREEN	GREEN BALL 4M1, 4M2, 4A, 4B	PHASE 8 GREEN	GREEN BALL 2M3, 2A
18	ORANGE	RED	PHASE 4 YELLOW	YELLOW BALL 4M1, 4M2, 4A, 4B	PHASE 8 YELLOW	YELLOW BALL 2M3, 2A
19	BLUE	RED	PHASE 4 WALK	PEDESTRIAN WALK P6, P7	PHASE 8 WALK	PEDESTRIAN WALK P2, P3
20	RED	GREEN	PHASE 4 DON'T WALK	PEDESTRIAN DON'T WALK P6, P7	PHASE 8 DON'T WALK	PEDESTRIAN DON'T WALK P2, P3

[1] IDENTIFY CONDUCTORS LISTED AS "115 VOLTS".

[2] WRAP RING 2 CABLE AT EACH SPLICE POINT WITH COLORED ELECTRICAL TAPE. THE IDENTIFICATION MARKING SHALL BE PROVIDED ON EACH RIGHT 2 CABLE AT EACH SPLICE AND LOCATED 6" BACK FROM THE END.

FUNCTION CHART - 24 VOLT CIRCUIT [3]

CONDUCTOR		RING 1 - MULTI CONDUCTOR CABLE 5		RING 2 - MULTI CONDUCTOR CABLE 5	
NUMBER	BASE COLOR	FUNCTION	FIELD CONNECTION	FUNCTION	FIELD CONNECTION
1	BLACK	PHASE 2	P4, P5	SPARE	SPARE
2	WHITE	COMMON	COMMON	COMMON	COMMON
3	RED	PHASE 4	P6, P7	SPARE	SPARE
4	GREEN	SPARE	SPARE	PHASE 6	P1, P8
5	ORANGE	SPARE	SPARE	PHASE 8	P2, P3

[3] IDENTIFY CONDUCTORS LISTED AS "PP8 - LOW VOLTAGE" AT EACH SPLICE POINT. FIVE (5) CONDUCTOR CABLE SHALL BE 24 VOLTS AND USED FOR PUSH BUTTONS ONLY.

OPTICAL DETECTOR CABLE

FROM	TO	CONDUIT TRACE	TOTAL LENGTH
OPTN	CC2	MA2-40-5-2	230'
OPTS	CC2	MA4-47-26-29-32-2	255'
OPTE	CC2	MA1-35-2	110'
OPTW	CC2	MA3-44-11-8-5-2	345'
		TOTAL	940'

NOTES:

1/ IDENTIFY CONDUCTORS LISTED AS "115 VOLTS"

2/ WRAP RING 2 CABLE AT EACH SPLICE POINT WITH COLORED ELECTRICAL TAPE. THE IDENTIFICATION MARKING SHALL BE PROVIDED ON EACH RING 2 CABLE AT EACH SPLICE BOX AND LOCATED 6" BACK FROM THE END.

3/ IDENTIFY CONDUCTORS LISTED AS "PPB – LOW VOLTAGE" AT EACH SPLICE POINT. FIVE (5) CONDUCTOR CABLE SHALL BE 24 VOLTS AND USED FOR PUSH BUTTONS ONLY.

DETECTOR RACK ASSIGNMENTS I

UNIT NUMBER	POWER SUPPLY	1	2	3	4	5	6	7	8	9	10	11	12	13	14	15	16	17	18
CHANNEL 1		Φ1	Φ2	Φ6	Φ2 EC	Φ3	Φ4	Φ8	Φ4 EC	DUAL LEFT Φ1	DUAL LEFT Φ3	SD 1	SD 3	SD 5	SD 7	SD 9	PED ISOLATION	OPTICOM 1	OPTICOM 3
CHANNEL 2		Φ5	Φ2	Φ6	Φ6 EC	Φ7	Φ4	Φ8	Φ8 EC	DUAL LEFT Φ5	DUAL LEFT Φ7	SD 2	SD 4	SD 6	SD 8	SD 10		OPTICOM 2	OPTICOM 4
DETECTOR MODULE REQUIRED	*	X	X	X	X	X	X	X			X	X						X	X

* INCIDENTAL TO CONSTRUCTION

DETECTOR LOOPS

LOOP ID	VEHICLE DETECTOR				LOOP TYPE	LOOP DIMENSIONS				LOOP WIRE (FT)	PAVEMENT SAWCUT
	MODE	CALL	UNIT #	CHANNEL		L	W	S	T		
DL1 (1)	PRESENCE		ONE	CH 1	QP	6	6	40	15	187'	70'
DL1 (2)	PRESENCE		ONE	CH 1	QP	30	6	40	15	379'	142'
DL2 (1)	PRESENCE		TWO	CH 1	QP	30	6	40	5	359'	142'
DL2 (2)	PRESENCE		TWO	CH 1	QP	30	6	30	5	339'	132'
EC2 (1)	PRESENCE		FOUR	CH 1	QP	6	6	40	5	167'	70'
EC2 (2)	PRESENCE		FOUR	CH 1	QP	6	6	30	5	147'	60'
DL3 (1)	PRESENCE		FIVE	CH 1	QP	30	6	15	10	319'	117'
DL3 (2)	PRESENCE		TEN	CH 1	QP	30	6	25	10	339'	127'
DL3 (3)	PRESENCE		TEN	CH 1	QP	6	6	30	5	147'	60'
DL3 (4)	PRESENCE		TEN	CH 1	QP	30	6	30	5	339'	132'
DL4 (1)	PRESENCE		SIX	CH 1	QP	6	6	10	10	117'	40'
DL4 (2)	PRESENCE		SIX	CH 1	QP	30	6	10	5	299'	112'
DL4 (3)	PRESENCE		SIX	CH 1	QP	30	6	20	5	319'	122'
DL5 (1)	PRESENCE		ONE	CH 2	QP	6	6	15	5	117'	45'
DL5 (2)	PRESENCE		ONE	CH 2	QP	30	6	10	5	299'	112'
DL6 (1)	PRESENCE		FOUR	CH 2	QP	30	6	15	5	309'	117'
DL6 (2)	PRESENCE		FOUR	CH 2	QP	30	6	25	5	329'	127'
DL6 (3)	PRESENCE		FOUR	CH 2	QP	30	6	35	5	349'	137'
EC6 (1)	PRESENCE		FOUR	CH 2	QP	6	6	15	5	117'	45'
EC6 (2)	PRESENCE		FOUR	CH 2	QP	6	6	25	5	137'	55'
EC6 (3)	PRESENCE		FOUR	CH 2	QP	6	6	35	5	157'	65'
DL7 (1)	PRESENCE		FIVE	CH 2	QP	6	6	30	5	147'	60'
DL7 (2)	PRESENCE		FIVE	CH 2	QP	30	6	35	5	349'	137'
DL8 (1)	PRESENCE		SEVEN	CH 1	QP	6	6	20	10	137'	50'
DL8 (2)	PRESENCE		SEVEN	CH 1	QP	30	6	20	10	329'	122'
DL8 (3)	PRESENCE		SEVEN	CH 1	QP	30	6	10	10	309'	112'
SD1 (1)	PRESENCE		ELEVEN	CH 1	QP	6	6	30	20	177'	60'
SD1 (2)	PRESENCE		ELEVEN	CH 1	QP	6	6	20	15	147'	50'
SD1 (3)	PRESENCE		ELEVEN	CH 1	QP	6	6	10	15	127'	40'
SD2 (1)	PRESENCE		ELEVEN	CH 2	QP	6	6	20	10	137'	50'
SD2 (2)	PRESENCE		ELEVEN	CH 2	QP	6	6	30	10	157'	60'
SD2 (3)	PRESENCE		ELEVEN	CH 2	QP	6	6	40	10	177'	70'
TOTALS										7470'	2840'

QUANTITIY ESTIMATING ASSUMPTIONS

LOOPWIRE
6'X6' QUADRUPOLE LOOP=(8xL)+(4xW)+(2xS)+(2xT)+5 =77+[2x(S+T)]
6'X30' QUADRUPOLE LOOP=(8xL)+(4xW)+(2xS)+(2xT)+5 =269+[2x(S+T)]
6'X40' QUADRUPOLE LOOP=(8xL)+(4xW)+(2xS)+(2xT)+5 =349+[2x(S+T)]

PAVEMENT SAWCUT
6'X6' QUADRUPOLE LOOP=(3xL)+(2xW)+(2xS)+S=35+S
6'X30' QUADRUPOLE LOOP=(3xL)+(2xW)+(2xS)+S=102+S
6'X40' QUADRUPOLE LOOP=(3xL)+(2xW)+(2xS)+S=132+S

WHERE
L=DETECTOR LOOP LENGTH (FROM PLANS)
W=DETECTOR LOOP WIDTH (FROM PLANS)
S=SAWCUT LENGTH FROM DETECTOR LOOP TO FACE OF CURB (FROM PLANS)
T=LOOP WIRE TERMINAL LENGTH FROM FACE OF CURB TO PULL BOX (FROM PLANS)

PAUL F. STEFFIN — NEW MEXICO — 16321 — REGISTERED PROFESSIONAL ENGINEER — 9/6/2015

NO.	DESCRIPTION	DATE	BY
3			
2			
1			

REVISIONS (OR CHANGE NOTICES)

SCALE N.T.S.

DESIGNED BY: PB	DRAWN BY: PB	CHECKED BY: JB
DATE: 08/07/15	DATE: 08/07/15	DATE: 08/07/15

CITY OF SANTA FE

CERRILLOS ROAD PHASE IIC
CAMINO CARLOS REY TO
LLANO STREET
SANTA FE COUNTY

TRAFFIC SIGNAL FUNCTION
CHARTS & SIGNAL QUANTITIES
CERRILLOS ROAD/ST. MICHAELS DRIVE

ITS GENERAL NOTES

1. THIS PROJECT HAS BEEN DESIGNED USING THE NMDOT STANDARD CONSTRUCTION DETAILS.

2. THE PLANS SHOW THE GENERAL PATH AND LOCATION OF CONDUIT AND EQUIPMENT IN RELATION TO MAJOR PHYSICAL FEATURES AND APPROXIMATE STATIONING. THE LOCATION OF UTILITY POLES, SIGNS, VEGETATION AND OTHER STATIONARY OBJECTS ALONG THE CONDUIT PATH MAY NOT BE SHOWN, BUT SHALL BE IDENTIFIED BY THE CONTRACTOR AS THE CONDUIT ROUTE IS MARKED PRIOR TO TRENCHING. THE CONTRACTOR SHALL PLACE ALL CONDUIT IN A MANNER THAT MINIMIZES HORIZONTAL AND VERTICAL BENDING, NOT TO EXCEED 1 FOOT PER 10 FEET, IN ORDER TO MINIMIZE THE INDUCED STRESSES ON CABLES DURING CABLE INSTALLATION. ALL CONDUIT, COMMUNICATION CABLE, AND ELECTRICAL CABLE SHALL BE INSTALLED ACCORDING TO NATIONAL ELECTRIC CODE REQUIREMENTS.

3. CONDUIT LAYOUT SHOWN ON THE PLANS IS SCHEMATIC. CONTRACTOR SHALL PLACE CONDUIT, PULL BOXES, AND POLES WITHIN RIGHT-OF-WAY. THE CONTRACTOR IS RESPONSIBLE FOR FIELD LOCATING CONDUIT AROUND EXISTING UTILITIES AND OBSTRUCTIONS.

4. IT SHALL BE THE RESPONSIBILITY OF THE CONTRACTOR TO VERIFY ALL FIELD CONDITIONS NECESSARY FOR THE COMPLETION OF THIS WORK. THIS WILL INCLUDE, BUT IS NOT LIMITED TO, LOCATIONS OF ALL EXISTING CONDUIT, PULL BOXES, JUNCTION BOXES, ELECTRICAL SERVICES, UNDERGROUND OR OVERHEAD UTILITIES, ELEVATIONS AND LOCATIONS. THE CONTRACTOR SHALL NOTIFY NEW MEXICO ONE-CALL, 505-260-1990, AT LEAST 2 WORKING DAYS PRIOR TO ANY EXCAVATION TO LOCATE ALL EXISTING UNDERGROUND UTILITIES. THIS WORK SHALL BE INCIDENTAL TO THE CONSTRUCTION OF THE PROJECT. THE CONTRACTOR WILL NOT BE COMPENSATED FOR THE NECESSARY REPAIRS IF UTILITIES ARE DAMAGED DURING CONSTRUCTION.

5. CONTRACTOR SHALL MEET THE REQUIREMENTS OF SECTION 709 OF THE STANDARD SPECIFICATIONS (CURRENT EDITION) FOR ANY TYPES OF CONDUIT INSTALLATIONS IN THIS PROJECT.

6. CONDUIT CROSSING EXISTING ASPHALT ROADWAYS SHALL BE BORED UNLESS OTHERWISE NOTED. CONDUIT CROSSING OTHER EXISTING ASPHALT SURFACES MAY BE OPEN CUT. OPEN CUTS SHALL NOT BE MORE THAN 3" NOMINAL WIDER THAN THE SUM OF OUTSIDE DIAMETERS OF THE CONDUITS INSTALLED. ASPHALT SHALL BE SAW CUT ON BOTH SIDES OF THE TRENCH LINE PRIOR TO TRENCHING, WITH A MAXIMUM WIDTH OF 12" WIDER THAN THE TRENCH WIDTH. BACKFILL SHALL BE FLOWABLE FILL (ACCORDING TO SECTION 516 OF THE STANDARD SPECIFICATIONS, CURRENT EDITION) TO WITHIN 2" OF THE TOP OF THE TRENCH OR TO THE BOTTOM OF THE ASPHALT, WHICHEVER IS DEEPER. COMPACTED ASPHALTIC CONCRETE SHALL BE INSTALLED IN THE FINAL 2" OF TRENCH, UNLESS SURROUNDING ASPHALTIC CONCRETE THICKNESS IS GREATER THAN 2", IN WHICH CASE, DEPTH OF COMPACTED ASPHALTIC CONCRETE SHALL MATCH SURROUNDING DEPTH.

7. AN UNDERGROUND MARKING TAPE LABELED WITH THE TEXT "CAUTION: CITY OF SANTA FIBER OPTIC CABLE BURIED BELOW" SHALL BE EMBEDDED IN THE TRENCH BACKFILL AS DIRECTED ON STANDARD DRAWING 750-01-1/2. ALSO A LOCATE WIRE (TRACER WIRE) SHALL BE PLACED INSIDE THE CONDUIT TO ASSIST IN LOCATING THEM FOR FUTURE SERVICE AND REPAIRS. A PULL STRING SHALL BE PLACED IN ALL EMPTY CONDUITS AND INNERDUCTS. THE COST FOR MARKING TAPE, LOCATE WIRE, AND PULL STRINGS SHALL BE CONSIDERED AS INCIDENTAL TO THE CONDUIT AND NO ADDITIONAL MEASUREMENTS OR PAYMENTS THEREFORE WILL BE MADE.

8. WHERE THE CONDUIT INSTALLATION DISTURBS EXISTING LANDSCAPE, IRRIGATION OR PAVEMENT, THE CONTRACTOR SHALL BE RESPONSIBLE TO COMPLETELY RESTORE THESE AREAS TO ORIGINAL CONDITION.

9. IN EACH ITS MANHOLE 50 FEET OF MAIN FIBER OPTIC CABLE SHALL BE STORED AND AN ADDITIONAL 20 FEET AT EACH SPLICE, WITH 10 FEET OF CABLE ON EACH SIDE OF THE CABLE SPLICE POINT OR AS SHOWN IN THE PLANS. STORE 25 FEET OF SPARE FIBER OPTIC CABLE IN EACH ITS PULL BOX. STORE THE FIBER OPTIC CABLE WITHOUT TWISTING OR BENDING THE CABLE BELOW THE MINIMUM BEND RADIUS OF 10 TIMES THE CABLE DIAMETER.

10. ITS EQUIPMENT CABINETS SHALL BE INSTALLED ON THE BACK SIDE OF THE POLE RELATIVE TO TRAFFIC FLOW. DOORS SHALL BE HINGED TO OPEN TOWARD TRAFFIC TO BLOCK SPRAY WHEN ROADWAY IS WET.

11. AS-BUILT PLANS. IN ADDITION TO THE CONTRACTOR'S OBLIGATION TO DEVELOP AND MAINTAIN AS-BUILT PLANS IN ACCORDANCE WITH THE STANDARD SPECIFICATIONS, SECTION 105.2, THE CITY MAY ALSO MAINTAIN A SET OF AS-BUILT PLANS FOR THIS PROJECT. THEREFORE THE CONTRACTOR'S SURVEYOR SHALL PROVIDE INFORMATION ON ANY REVISION TO THE HORIZONTAL AND VERTICAL GEOMETRY TO THE PROJECT MANAGER. ALSO THE CONTRACTOR SHALL PROVIDE ESRI SHAPE FILES WITH GPS COORDINATES OF EACH INSTALLED ITS ELEMENT TO THE NMDOT ITS BUREAU. THE FOLLOWING ELEMENTS CAN BE CONSIDERED AS ITS ELEMENTS: ITS PULL BOXES, ITS MANHOLES, ITS POLES, CAMERAS, SENSORS, DYNAMIC MESSAGE SIGNS, HAR STATIONS, SERVICE METERS, AND ANY OTHER ITS RELATED ELEMENT. GPS DATA SHALL BE COLLECTED IN WGS84 AND DECIMAL DEGREES FORMAT. CONTRACTOR SHALL CONTACT RICK DEVINE AT 505-955-2320 PRIOR TO ANY DATA COLLECTION.

ADVANCED TRAFFIC MANAGEMENT SYSTEM NOTES

1. THE ADVANCED TRAFFIC MANAGEMENT SYSTEM (ATMS) SHALL PROVIDE COMMUNICATION BETWEEN TRAFFIC SIGNALS WITHIN THE CITY OF SANTA FE. THE SYSTEM SHALL PROVIDE CENTER TO CENTER COMMUNICATIONS FOR THE CITY OF SANTA FE. THE SYSTEM SHALL BE INSTALLED AT THE CITY OF SANTA FE TRAFFIC SIGNAL SHOP AND INTEGRATED IN THE FIELD AS REQUIRED. THE SYSTEM SHALL INCLUDE THE FOLLOWING:

   A. ATMS SOFTWARE WITH 50 INTERSECTION LICENSES.

   B. INSTALLATION AND INTEGRATION OF 6 INTERSECTIONS INTO THE SYSTEM INCLUDING: CAMINO CONSUELO, CALLE DEL CIELO, SILER ROAD, CAMINO CARLOS REY, LUJAN STREET, AND ST. MICHAELS DRIVE. THIS SHALL INCLUDE ALL OF THE MATERIALS HARDWARE REQUIRED AT EACH OF THE SIGNAL CONTROLLER CABINETS AND TRAFFIC SIGNAL LAB FOR FULL OPERATIONS OF THE SYSTEM.

   C. 3 DAYS TRAINING TO CITY OF SANTA FE STAFF.

   D. 1 YEAR SOFTWARE MAINTENANCE AGREEMENT.

   ALL SOFTWARE, LICENSES, INSTALLATION, INTEGRATION, TRAINING, AND ACCEPTANCE SHALL BE CONSIDERED INCIDENTAL TO ADVANCED TRAFFIC MANAGEMENT SYSTEM (ITEM 713900).

INTELLIGENT TRANSPORTATION SYSTEM NOTES

1. BID ITEM 750000 INTELLIGENT TRANSPORTATION SYSTEM SHALL INCLUDE ALL COSTS ASSOCIATED WITH:

   A. SETTING UP COMPONENTS AND TESTING IN A LABORATORY SETTING BY THE EQUIPMENT VENDOR TO ENSURE THAT COMPONENTS WILL COMMUNICATE WITH EACH OTHER IN A MANNER ACCEPTABLE TO THE CITY OF SANTA FE TRAFFIC OPERATIONS SECTION AND THE PROJECT MANAGER.

   B. FIELD INSTALLATION OF ALL COMPONENTS, FIBER OPTIC CABLES, AND VIDEO POWER/COAXIAL AND OTHER CABLES UNDER THE SUPERVISION OF THE EQUIPMENT VENDOR.

   C. FIELD TESTING, TURN ON AND ADJUST ALL FIBER OPTIC COMPONENTS. SPLICE REQUIREMENTS AND CONNECTIONS DETAILS SHALL BE ACQUIRED FROM THE CITY OF SANTA FE TRAFFIC OPERATIONS SECTION.

   D. PROVIDE THREE (3) DAYS ON-SITE TRAINING FOR FIBER OPTIC EQUIPMENT TROUBLE SHOOTING AND REPAIR.

   E. FIELD INSTALLATION OF TWO (2) PAN-TILT-ZOOM UNITS. ONE TO BE INSTALLED AT THE CERRILLOS ROAD / LUJAN STREET INTERSECTION AND ONE AT THE CERRILLOS ROAD / ST. MICHAELS DRIVE INTERSECTION.

   F. FIELD INSTALLATION OF A BLUETOAD CELLULAR UNIT ON A TYPE I POLE AT THE CERRILLOS ROAD / ST. MICHAELS DRIVE INTERSECTION. THE BLUETOAD CELLULAR UNIT SHALL INCLUDE:

      a. ONE (1) BLUE TOAD CELLULAR
      b. ONE (1) SOLAR PANEL WITH BATTERY TO FULLY POWER THE UNIT
      c. ONE (1) BLUETOAD CABINET
      d. ALL BRACKETS, HARDWARE, AND CABLES REQUIRED FOR INSTALLATION PER MANUFACTURERS SPECIFICATIONS

   THE SYSTEM SHALL ALSO INCLUDE:

   a. INSTALLATION OF BLUETOAD CELLULAR UNIT PER MANUFACTURERS SPECIFICATIONS
   b. INTEGRATION OF THE SYSTEM INTO THE CITY OF SANTA FE BLUETOAD NETWORK AT THE TRAFFIC SIGNAL SHOP
   c. 1 DAY OF TRAINING TO CITY OF SANTA FE STAFF
   d. 1 YEAR SOFTWARE MAINTENANCE AGREEMENT

PARSONS BRINCKERHOFF

CITY OF SANTA FE	SHEET
NEW MEXICO PROJECT NO.	NO.
CN S100130	9-15

ITS QUANTITIES SUMMARY

NUMBER	ITEM	UNIT	ITS PLANS
511000	STRUCTURAL CONCRETE, CLASS A	C.Y.	1
540080	REINFORCING BARS GRADE 60	LB.	17
707010	TYPE I STANDARD, 10'	EACH	1
709020	RIGID ELECTRICAL CONDUIT 2" (DIA)	L.F.	16,230
709030	RIGID ELECTRICAL CONDUIT 3" (DIA)	L.F.	3,135
713805	VIDEO COAXIAL CABLE	L.F.	430
713806	VIDEO POWER CABLE	L.F.	430
713810	VIDEO CAMERA	EACH	2
713812	PAN-TILT-ZOOM UNIT	EACH	2
713900	ADVANCED TRAFFIC MANAGEMENT SYS	L.S.	L.S.
750000	INTELLIGENT TRANSPORTATION SYSTEM	L.S.	L.S.
750080	ITS MANHOLE (48" X 48" X 48")	EACH	20

INTELLIGENT TRANSPORTATION SYSTEM ITEM NO. 750000 (LUMP SUM)

ITEM	UNIT	TOTAL
BLUETOAD CELLULAR UNIT	L.S.	L.S.
FIBER OPTIC CABLE 6 STRAND	L.F.	160
FIBER OPTIC CABLE 36 STRAND	L.F.	5,370
ITS ACCEPTANCE TESTING	L.S.	L.S.

PAUL F. STEFFIN — NEW MEXICO — 15,000 — 10/1/2015 — REGISTERED PROFESSIONAL ENGINEER

NO.	DESCRIPTION	DATE	BY
3			
2			
1			

REVISIONS (OR CHANGE NOTICES)

SCALE
N.T.S.

DESIGNED BY: PB	DRAWN BY: PB	CHECKED BY: JB
DATE: 08/07/15	DATE: 08/07/15	DATE: 08/07/15

CITY OF SANTA FE

CERRILLOS ROAD PHASE IIC
CAMINO CARLOS REY TO
LLANO STREET
SANTA FE COUNTY

ITS SYSTEM PLAN
GENERAL NOTES & QUANTITIES

PARSONS BRINCKERHOFF

CITY OF SANTA FE	SHEET
NEW MEXICO PROJECT NO.	NO.
CN S100130	9–16

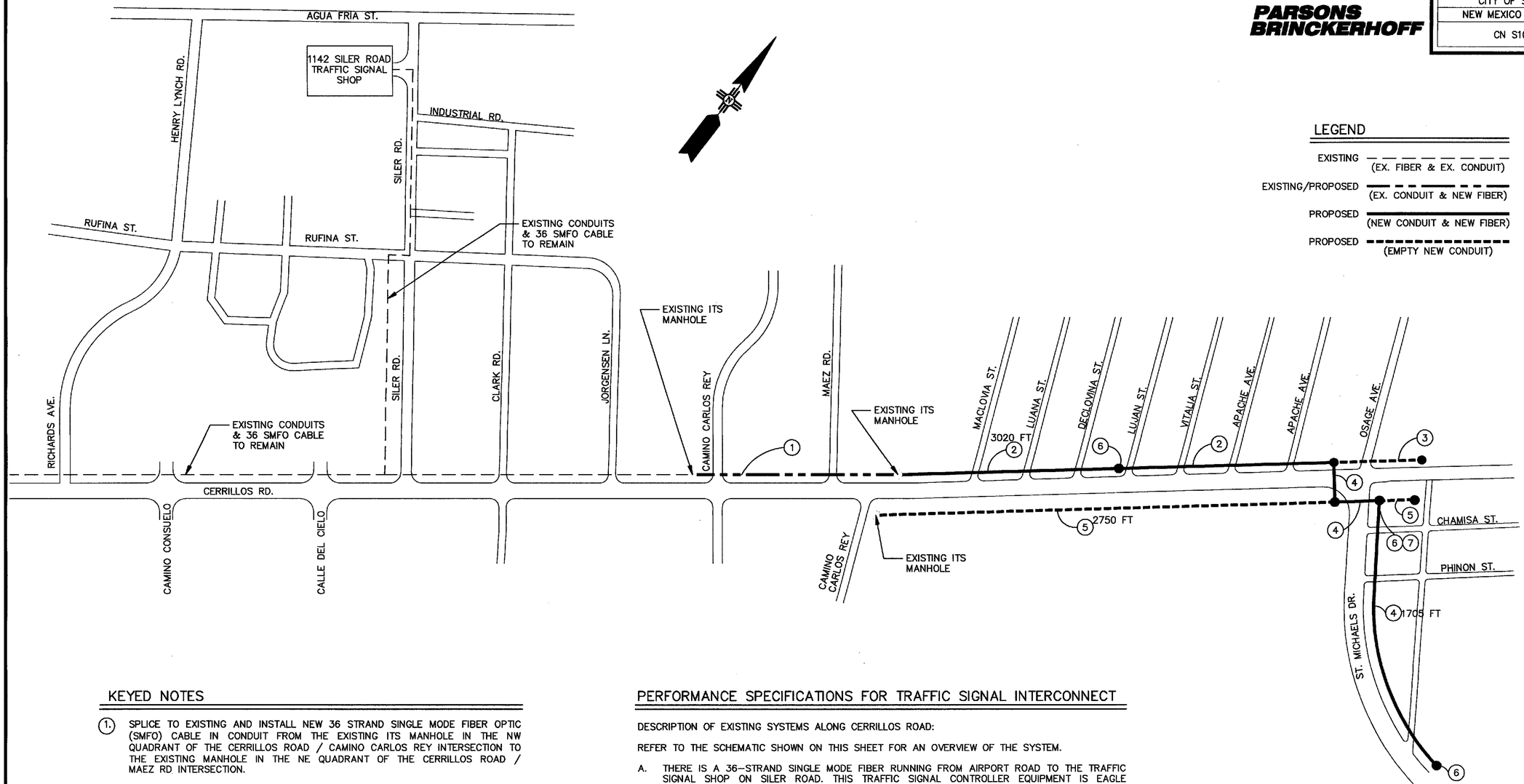

LEGEND

EXISTING — — — — — — — — (EX. FIBER & EX. CONDUIT)

EXISTING/PROPOSED — — — — — — — — (EX. CONDUIT & NEW FIBER)

PROPOSED ———— (NEW CONDUIT & NEW FIBER)

PROPOSED - - - - - - - - (EMPTY NEW CONDUIT)

KEYED NOTES

1. SPLICE TO EXISTING AND INSTALL NEW 36 STRAND SINGLE MODE FIBER OPTIC (SMFO) CABLE IN CONDUIT FROM THE EXISTING ITS MANHOLE IN THE NW QUADRANT OF THE CERRILLOS ROAD / CAMINO CARLOS REY INTERSECTION TO THE EXISTING MANHOLE IN THE NE QUADRANT OF THE CERRILLOS ROAD / MAEZ RD INTERSECTION.
2. INSTALL TWO (2) NEW 2" DIAM CONDUITS AND ONE (1) 3" CONDUIT. SPLICE AND INSTALL NEW 36 STRAND SMFO CABLE IN ONE (1) OF THE TWO (2) NEW 2" DIAM. CONDUITS. ONE (1) NEW 2' DIAM. CONDUIT AND THE 3" DIAM CONDUIT SHALL REMAIN EMPTY.
3. INSTALL TWO (2) NEW 2" DIAM CONDUITS AND ONE (1) 3" CONDUIT. ALL THREE (3) CONDUITS SHALL REMAIN EMPTY.
4. INSTALL TWO (2) NEW 2" DIAM CONDUITS AND INSTALL NEW 36 STRAND SMFO CABLE IN ONE (1) OF THE TWO (2) NEW 2" DIAM CONDUITS. THE REMAINING CONDUIT SHALL REMAIN EMPTY.
5. INSTALL TWO (2) NEW 2" DIAM CONDUITS. BOTH CONDUITS SHALL REMAIN EMPTY.
6. SPLICE TOGETHER NEW 6 SMFO CABLE WITH THE NEW 36 STRAND SMFO CABLE AND CONNECT THE NEW 6 SMFO CABLE TO THE SIGNAL CONTROLLER CABINET.
7. INSTALL AND INTEGRATE A BLUETOAD CELLULAR UNIT.

PERFORMANCE SPECIFICATIONS FOR TRAFFIC SIGNAL INTERCONNECT

DESCRIPTION OF EXISTING SYSTEMS ALONG CERRILLOS ROAD:

REFER TO THE SCHEMATIC SHOWN ON THIS SHEET FOR AN OVERVIEW OF THE SYSTEM.

A. THERE IS A 36–STRAND SINGLE MODE FIBER RUNNING FROM AIRPORT ROAD TO THE TRAFFIC SIGNAL SHOP ON SILER ROAD. THIS TRAFFIC SIGNAL CONTROLLER EQUIPMENT IS EAGLE BRAND.

B. THE SOUTHWEST CERRILLOS ROAD SYSTEM INCLUDES THE INTERSECTIONS OF ZAFARANO, VEGAS VERDES, AVENIDA DE LAS AMERICAS, AND RICHARDS AVENUE. THIS IS AN EAGLE SYSTEM.

C. THE SYSTEM FROM THE BOP TO ST. MICHAELS INCLUDES THE INTERSECTIONS OF CAMINO CONSUELO, CALLE DE CIELO, SILER ROAD, CAMINO CARLOS REY, LUJAN STREET, AND ST. MICHAELS DRIVE. THIS IS AN ECONOLITE SYSTEM. THERE IS AN EXISTING 12 PAIR COPPER COMMUNICATIONS CABLE RUNNING FROM CERRILLOS ROAD / ST. MICHAELS DRIVE TO CERRILLOS / CAMINO CARLOS REY. THIS EXISTING SYSTEM COMMUNICATES WITH THE TRAFFIC SIGNAL SHOP VIA A MASTER CONTROLLER AND A DIAL–UP TELEPHONE MODEM LOCATED AT THE SIGNAL CABINET AT CERRILLOS ROAD / ST. MICHAELS DRIVE INTERSECTION.

D. THERE IS AN EXISTING COPPER TELEMETRY CABLE THAT RUNS FROM PASEO DEL PERALTA ALONG CERRILLOS ROAD TERMINATING IN THE CERRILLOS ROAD / ST. MICHAELS DRIVE CONTROLLER CABINET. THE CABLE AND CONNECTION SHALL BE PRESERVED AND TERMINATED AT THE NEW CERRILLOS ROAD / ST. MICHAELS DRIVE CONTROLLER CABINET. THE CABLE WILL BE USED TO CONNECT THE SANTA FE SIGNAL SHOP TO THE MASTER CONTROLLERS AT CERRILLOS ROAD / ST. FRANCIS DRIVE.

PAUL F. STEFFIN — NEW MEXICO — 17382 — REGISTERED PROFESSIONAL ENGINEER — 10/1/2015

NO.	DESCRIPTION	DATE	BY
3			
2			
1			

REVISIONS (OR CHANGE NOTICES)

CITY OF SANTA FE

CERRILLOS ROAD PHASE IIC
CAMINO CARLOS REY TO
LLANO STREET
SANTA FE COUNTY

ITS SYSTEM PLAN

SCALE
N.T.S.

DESIGNED BY: PB	DRAWN BY: PB	CHECKED BY: JB
DATE: 08/07/15	DATE: 08/07/15	DATE: 08/07/15

J:\33693 Cerrillos Ph IIC\04 Engineering–33693\Plans\9_Sheets\9–16 Traffic Signal Fiber Optic System.dwg Sep 30, 2015 – 2:14pm Saved By: chavezdx

N.M. PROJECT NO. CN S100130 SHEET NO. 9–16

PARSONS BRINCKERHOFF

CITY OF SANTA FE	SHEET
NEW MEXICO PROJECT NO.	NO.
CN S100130	9–17

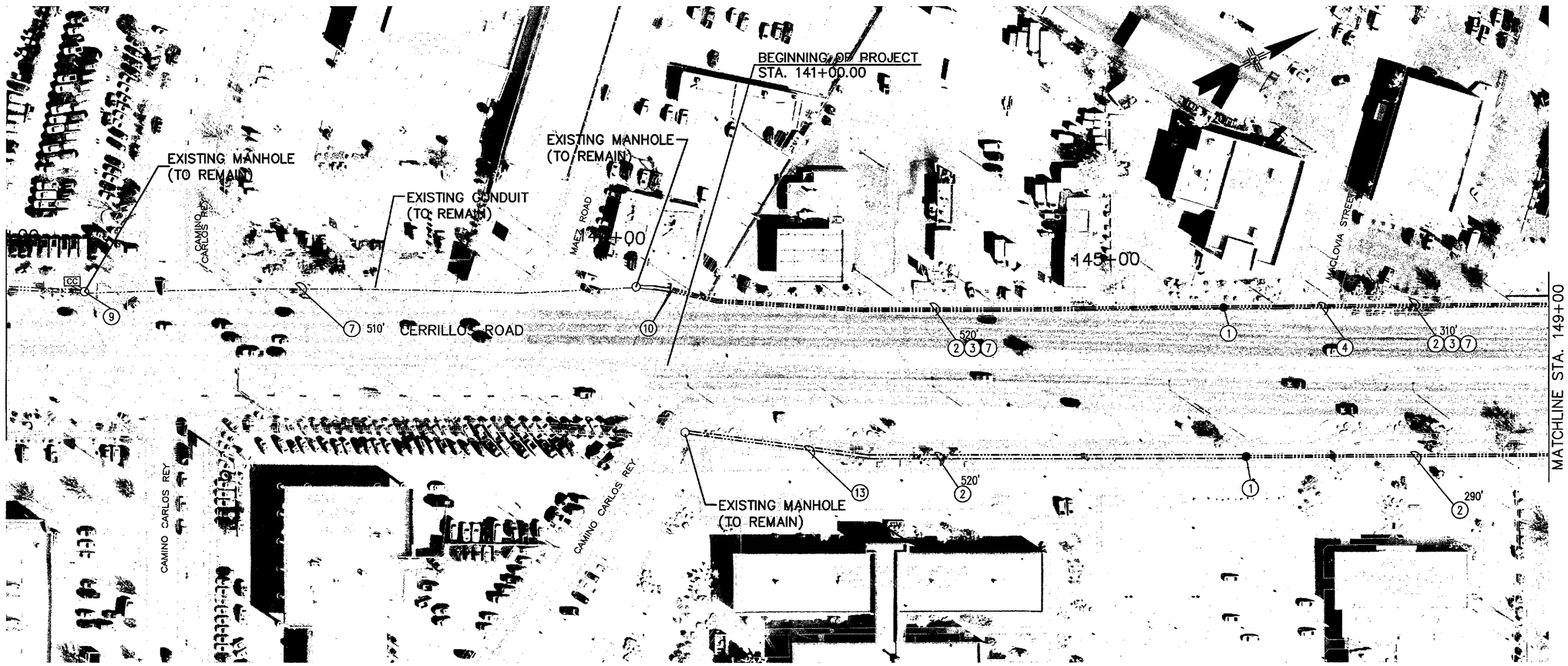

KEYED NOTES

1. INSTALL NEW ITS MANHOLE.
2. INSTALL TWO (2) NEW 2" RIGID ELECTRICAL CONDUIT FOR INTERCONNECT. EMPTY CONDUIT SHALL HAVE PULL STRINGS (INCIDENTAL TO CONSTRUCTION).
3. INSTALL ONE (1) NEW 3" RIGID ELECTRICAL CONDUIT FOR FUTURE NMDOT USE. CONDUIT SHALL HAVE PULL STRING (INCIDENTAL TO CONSTRUCTION).
4. INSTALL NEW CONDUIT(S) (AS INDICATED) WHEN CROSS STREET IS RECONSTRUCTED.
5. INSTALL TWO (2) RIGID ELECTRICAL CONDUITS, 2" (5' LONG) AND CAP.
6. INSTALL ONE (1) RIGID ELECTRICAL CONDUIT, 3" (5' LONG) AND CAP.
7. INSTALL FIBER OPTIC TRUNK CABLE 36 FIBER SINGLE MODE INSIDE 2" RIGID ELECTRICAL CONDUIT FOR INTERCONNECT.
8. INSTALL FIBER OPTIC DROP CABLE 6 STRAND FROM ITS MANHOLE TO SIGNAL CONTROLLER INSIDE ONE (1) NEW 2" RIGID ELECTRICAL CONDUIT.
9. SPLICE NEW FIBER OPTIC TRUNK CABLE TO EXISTING FIBER OPTIC DROP CABLE INSIDE ITS MANHOLE. SPLICE CONNECTION DETAILS TO BE PROVIDED BY THE CITY OF SANTA FE TRAFFIC SIGNAL OPERATIONS SECTION.
10. CONNECT PROPOSED CONDUITS TO EXISTING CONDUIT STUB OUTS.
11. INSTALL BLUETOAD CELLULAR UNIT ON TYPE I POLE PER MANUFACTURER'S SPECIFICATIONS.
12. CONNECT NEW FIBER OPTIC DROP LINE TRUNK CABLE TO NEW CONTROLLER CABINET TO INTERFACE WITH NEW CONTROLLER. SPLICE CONNECTION DETAILS TO BE PROVIDED BY THE CITY OF SANTA FE TRAFFIC SIGNAL OPERATIONS SECTION.
13. REMOVE AND SALVAGE EXISTING COPPER COMMUNICATION CABLE & 2" PVC CONDUIT FROM CERRILLOS RD / CAMINO CARLOS REY DR TO CERRILLOS / SECOND ST (IN ONE PIECE).
14. SPLICE NEW FIBER OPTIC DROP CABLE 6 STRAND TO NEW FIBER OPTIC TRUNK CABLE. SPLICE CONNECTION DETAILS TO BE PROVIDED BY THE CITY OF SANTA FE TRAFFIC SIGNAL OPERATIONS SECTION.

ITS COMMUNICATION NOTES

1. THE MINIMUM ALLOWABLE BEND RADIUS FOR ALL COMMUNICATIONS CONDUIT IS TWELVE (12) INCHES. THIS APPLIES TO BOTH HORIZONTAL AND VERTICAL.
2. FIBER OPTIC SPLICE ENCLOSURES SHALL BE SECURELY FASTENED TO THE INSIDE OF THE ITS MANHOLE.

NO.	DESCRIPTION	DATE	BY
3			
2			
1			

REVISIONS (OR CHANGE NOTICES)

PAUL F. STEFFIN NEW MEXICO 18502 REGISTERED PROFESSIONAL ENGINEER 10/6/2015

SCALE
1"=50' HORIZ.

DESIGNED BY: PB	DRAWN BY: PB	CHECKED BY: JB
DATE: 08/07/15	DATE: 08/07/15	DATE: 08/07/15

CITY OF SANTA FE

CERRILLOS ROAD PHASE IIC
CAMINO CARLOS REY TO
LLANO STREET
SANTA FE COUNTY

INTERCONNECT PLAN
CERRILLOS ROAD

J:\33693 Cerrillos Ph IIC\04 Engineering-33693\Plans\9_Sheets\9-17_9-20 Interconnect Plan.dwg Sep 30, 2015 - 3:33pm Saved By: chavezdx

N.M. PROJECT NO. CN S100130 SHEET NO. 9–17

PARSONS BRINCKERHOFF

CITY OF SANTA FE	SHEET
NEW MEXICO PROJECT NO.	NO.
CN S100130	9–18

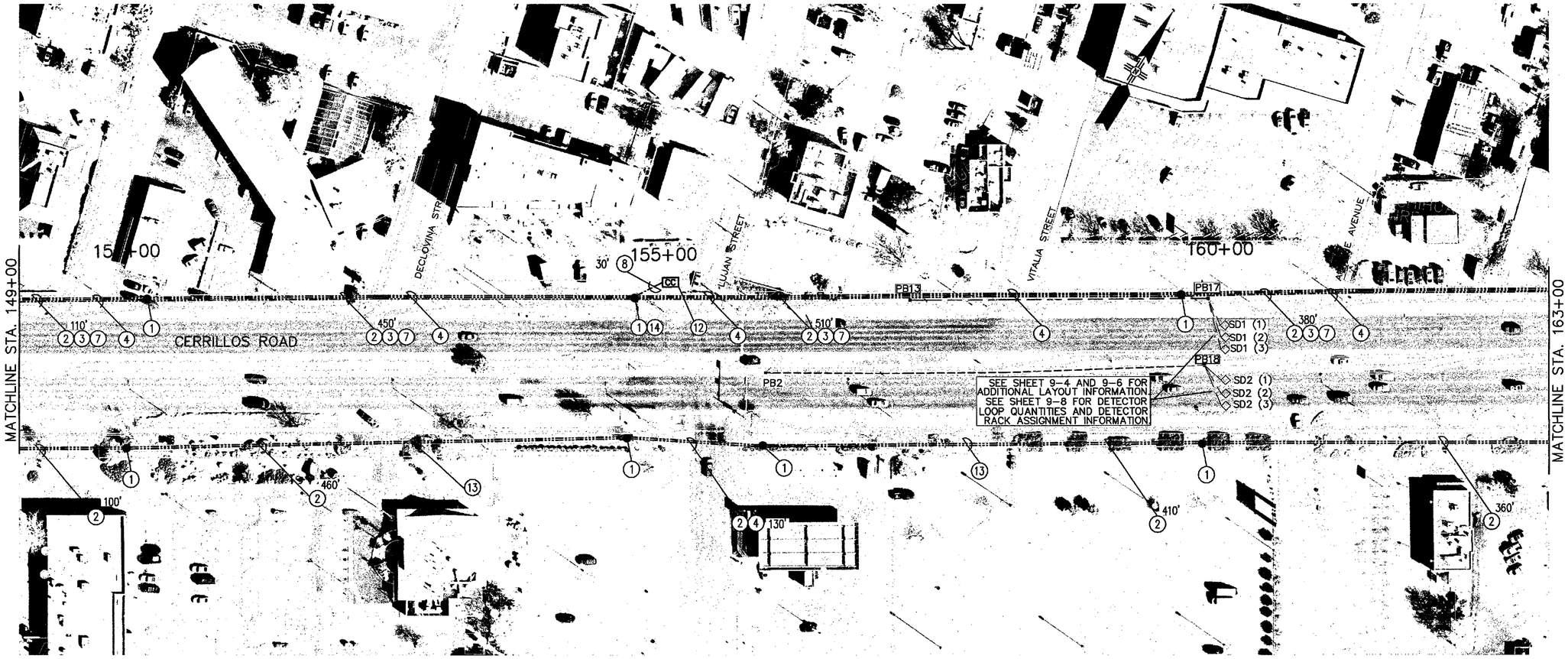

KEYED NOTES

1. INSTALL NEW ITS MANHOLE.
2. INSTALL TWO (2) NEW 2" RIGID ELECTRICAL CONDUIT FOR INTERCONNECT. EMPTY CONDUIT SHALL HAVE PULL STRINGS (INCIDENTAL TO CONSTRUCTION).
3. INSTALL ONE (1) NEW 3" RIGID ELECTRICAL CONDUIT FOR FUTURE NMDOT USE. CONDUIT SHALL HAVE PULL STRING (INCIDENTAL TO CONSTRUCTION).
4. INSTALL NEW CONDUIT(S) (AS INDICATED) WHEN CROSS STREET IS RECONSTRUCTED.
5. INSTALL TWO (2) RIGID ELECTRICAL CONDUITS, 2" (5' LONG) AND CAP.
6. INSTALL ONE (1) RIGID ELECTRICAL CONDUIT, 3" (5' LONG) AND CAP.
7. INSTALL FIBER OPTIC TRUNK CABLE 36 FIBER SINGLE MODE INSIDE 2" RIGID ELECTRICAL CONDUIT FOR INTERCONNECT.
8. INSTALL FIBER OPTIC DROP CABLE 6 STRAND FROM ITS MANHOLE TO SIGNAL CONTROLLER INSIDE ONE (1) NEW 2" RIGID ELECTRICAL CONDUIT.
9. SPLICE NEW FIBER OPTIC TRUNK CABLE TO EXISTING FIBER OPTIC DROP CABLE INSIDE ITS MANHOLE. SPLICE CONNECTION DETAILS TO BE PROVIDED BY THE CITY OF SANTA FE TRAFFIC SIGNAL OPERATIONS SECTION.
10. CONNECT PROPOSED CONDUITS TO EXISTING CONDUIT STUB OUTS.
11. INSTALL BLUETOAD CELLULAR UNIT ON TYPE I POLE PER MANUFACTURER'S SPECIFICATIONS.
12. CONNECT NEW FIBER OPTIC DROP LINE TRUNK CABLE TO NEW CONTROLLER CABINET TO INTERFACE WITH NEW CONTROLLER. SPLICE CONNECTION DETAILS TO BE PROVIDED BY THE CITY OF SANTA FE TRAFFIC SIGNAL OPERATIONS SECTION.
13. REMOVE AND SALVAGE EXISTING COPPER COMMUNICATION CABLE & 2" PVC CONDUIT FROM CERRILLOS RD / CAMINO CARLOS REY DR TO CERRILLOS / SECOND ST (IN ONE PIECE).
14. SPLICE NEW FIBER OPTIC DROP CABLE 6 STRAND TO NEW FIBER OPTIC TRUNK CABLE. SPLICE CONNECTION DETAILS TO BE PROVIDED BY THE CITY OF SANTA FE TRAFFIC SIGNAL OPERATIONS SECTION.

ITS COMMUNICATION NOTES

1. THE MINIMUM ALLOWABLE BEND RADIUS FOR ALL COMMUNICATIONS CONDUIT IS TWELVE (12) INCHES. THIS APPLIES TO BOTH HORIZONTAL AND VERTICAL.
2. FIBER OPTIC SPLICE ENCLOSURES SHALL BE SECURELY FASTENED TO THE INSIDE OF THE ITS MANHOLE.

PAUL F. STEFFIN NEW MEXICO 13527 REGISTERED PROFESSIONAL ENGINEER 10/6/2015

NO.	DESCRIPTION	DATE	BY
3			
2			
1			

REVISIONS (OR CHANGE NOTICES)

CITY OF SANTA FE

CERRILLOS ROAD PHASE IIC
CAMINO CARLOS REY TO
LLANO STREET
SANTA FE COUNTY

INTERCONNECT PLAN
CERRILLOS ROAD

SCALE
1"=50' HORIZ.

DESIGNED BY: PB	DRAWN BY: PB	CHECKED BY: JB
DATE: 08/07/15	DATE: 08/07/15	DATE: 08/07/15

J:\33693 Cerrillos Ph IIC\04 Engineering-33693\Plans\9_Sheets\9-17_9-20 Interconnect Plan.dwg Sep 30, 2015 - 3:36pm Saved By: chavezdx

N.M. PROJECT NO. CN S100130 SHEET NO. 9–18

PARSONS BRINCKERHOFF

CITY OF SANTA FE	SHEET
NEW MEXICO PROJECT NO.	NO.
CN S100130	9–19

KEYED NOTES

1. INSTALL NEW ITS MANHOLE.
2. INSTALL TWO (2) NEW 2" RIGID ELECTRICAL CONDUIT FOR INTERCONNECT. EMPTY CONDUIT SHALL HAVE PULL STRINGS (INCIDENTAL TO CONSTRUCTION).
3. INSTALL ONE (1) NEW 3" RIGID ELECTRICAL CONDUIT FOR FUTURE NMDOT USE. CONDUIT SHALL HAVE PULL STRING (INCIDENTAL TO CONSTRUCTION).
4. INSTALL NEW CONDUIT(S) (AS INDICATED) WHEN CROSS STREET IS RECONSTRUCTED.
5. INSTALL TWO (2) RIGID ELECTRICAL CONDUITS, 2" (5' LONG) AND CAP.
6. INSTALL ONE (1) RIGID ELECTRICAL CONDUIT, 3" (5' LONG) AND CAP.
7. INSTALL FIBER OPTIC TRUNK CABLE 36 FIBER SINGLE MODE INSIDE 2" RIGID ELECTRICAL CONDUIT FOR INTERCONNECT.
8. INSTALL FIBER OPTIC DROP CABLE 6 STRAND FROM ITS MANHOLE TO SIGNAL CONTROLLER INSIDE ONE (1) NEW 2" RIGID ELECTRICAL CONDUIT.
9. SPLICE NEW FIBER OPTIC TRUNK CABLE TO EXISTING FIBER OPTIC DROP CABLE INSIDE ITS MANHOLE. SPLICE CONNECTION DETAILS TO BE PROVIDED BY THE CITY OF SANTA FE TRAFFIC SIGNAL OPERATIONS SECTION.
10. CONNECT PROPOSED CONDUITS TO EXISTING CONDUIT STUB OUTS.
11. INSTALL BLUETOAD CELLULAR UNIT ON TYPE I POLE PER MANUFACTURER'S SPECIFICATIONS.
12. CONNECT NEW FIBER OPTIC DROP LINE TRUNK CABLE TO NEW CONTROLLER CABINET TO INTERFACE WITH NEW CONTROLLER. SPLICE CONNECTION DETAILS TO BE PROVIDED BY THE CITY OF SANTA FE TRAFFIC SIGNAL OPERATIONS SECTION.
13. REMOVE AND SALVAGE EXISTING COPPER COMMUNICATION CABLE & 2" PVC CONDUIT FROM CERRILLOS RD / CAMINO CARLOS REY DR TO CERRILLOS / SECOND ST (IN ONE PIECE).
14. SPLICE NEW FIBER OPTIC DROP CABLE 6 STRAND TO NEW FIBER OPTIC TRUNK CABLE. SPLICE CONNECTION DETAILS TO BE PROVIDED BY THE CITY OF SANTA FE TRAFFIC SIGNAL OPERATIONS SECTION.

ITS COMMUNICATION NOTES

1. THE MINIMUM ALLOWABLE BEND RADIUS FOR ALL COMMUNICATIONS CONDUIT IS TWELVE (12) INCHES. THIS APPLIES TO BOTH HORIZONTAL AND VERTICAL.
2. FIBER OPTIC SPLICE ENCLOSURES SHALL BE SECURELY FASTENED TO THE INSIDE OF THE ITS MANHOLE.

PAUL F. STEFFIN
NEW MEXICO
16352
10/6/2015
REGISTERED PROFESSIONAL ENGINEER

NO.	DESCRIPTION	DATE	BY
3			
2			
1			

REVISIONS (OR CHANGE NOTICES)

CITY OF SANTA FE

CERRILLOS ROAD PHASE IIC
CAMINO CARLOS REY TO
LLANO STREET
SANTA FE COUNTY

INTERCONNECT PLAN
CERRILLOS ROAD

SCALE
1"=50' HORIZ.

DESIGNED BY: PB	DRAWN BY: PB	CHECKED BY: JB
DATE: 08/07/15	DATE: 08/07/15	DATE: 08/07/15

J:\33693 Cerrillos Ph IIC\04 Engineering-33693\Plans\9_Sheets\9-17_9-20 Interconnect Plan.dwg Sep 30, 2015 – 3:37pm Saved By: chavezdx

N.M. PROJECT NO. CN S100130 SHEET NO. 9–19

PARSONS BRINCKERHOFF

CITY OF SANTA FE	SHEET NO.
NEW MEXICO PROJECT NO.	
CN S100130	9–20

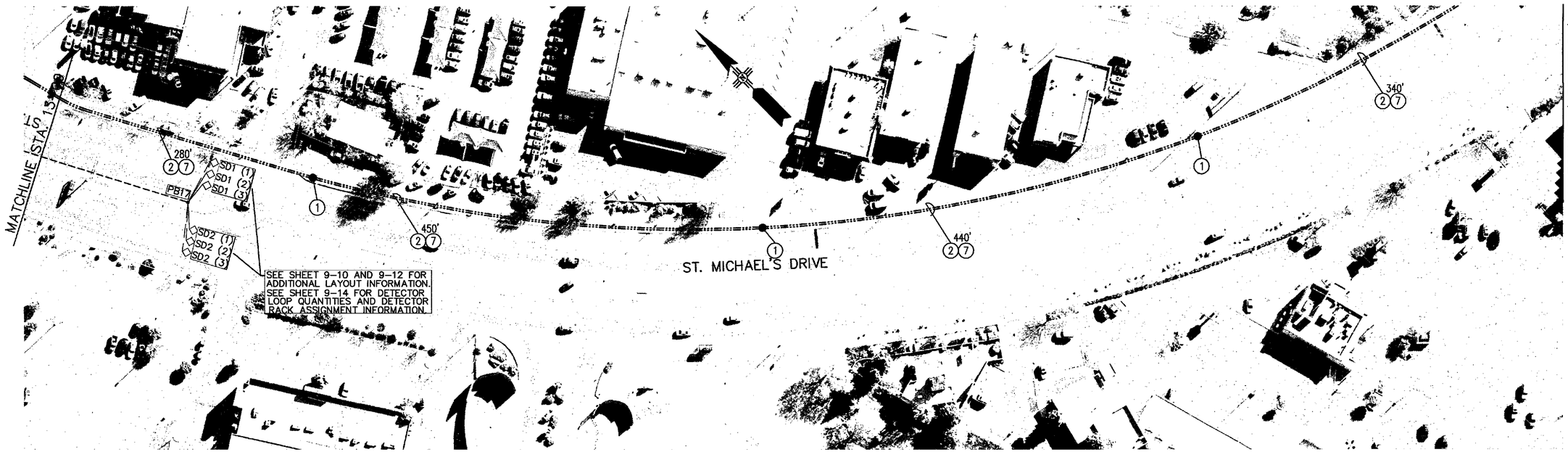

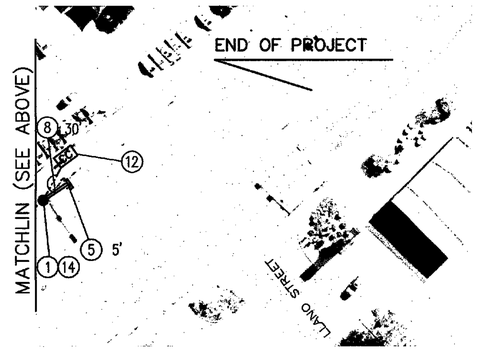

KEYED NOTES

1. INSTALL NEW ITS MANHOLE.
2. INSTALL TWO (2) NEW 2" RIGID ELECTRICAL CONDUIT FOR INTERCONNECT. EMPTY CONDUIT SHALL HAVE PULL STRINGS (INCIDENTAL TO CONSTRUCTION).
3. INSTALL ONE (1) NEW 3" RIGID ELECTRICAL CONDUIT FOR FUTURE NMDOT USE. CONDUIT SHALL HAVE PULL STRING (INCIDENTAL TO CONSTRUCTION).
4. INSTALL NEW CONDUIT(S) (AS INDICATED) WHEN CROSS STREET IS RECONSTRUCTED.
5. INSTALL TWO (2) RIGID ELECTRICAL CONDUITS, 2" (5' LONG) AND CAP.
6. INSTALL ONE (1) RIGID ELECTRICAL CONDUIT, 3" (5' LONG) AND CAP.
7. INSTALL FIBER OPTIC TRUNK CABLE 36 FIBER SINGLE MODE INSIDE 2" RIGID ELECTRICAL CONDUIT FOR INTERCONNECT.
8. INSTALL FIBER OPTIC DROP CABLE 6 STRAND FROM ITS MANHOLE TO SIGNAL CONTROLLER INSIDE ONE (1) NEW 2" RIGID ELECTRICAL CONDUIT.
9. SPLICE NEW FIBER OPTIC TRUNK CABLE TO EXISTING FIBER OPTIC DROP CABLE INSIDE ITS MANHOLE. SPLICE CONNECTION DETAILS TO BE PROVIDED BY THE CITY OF SANTA FE TRAFFIC SIGNAL OPERATIONS SECTION.
10. CONNECT PROPOSED CONDUITS TO EXISTING CONDUIT STUB OUTS.
11. INSTALL BLUETOAD CELLULAR UNIT ON TYPE I POLE PER MANUFACTURER'S SPECIFICATIONS.
12. CONNECT NEW FIBER OPTIC DROP LINE TRUNK CABLE TO NEW CONTROLLER CABINET TO INTERFACE WITH NEW CONTROLLER. SPLICE CONNECTION DETAILS TO BE PROVIDED BY THE CITY OF SANTA FE TRAFFIC SIGNAL OPERATIONS SECTION.
13. REMOVE AND SALVAGE EXISTING COPPER COMMUNICATION CABLE & 2" PVC CONDUIT FROM CERRILLOS RD / CAMINO CARLOS REY DR TO CERRILLOS / SECOND ST (IN ONE PIECE).
14. SPLICE NEW FIBER OPTIC DROP CABLE 6 STRAND TO NEW FIBER OPTIC TRUNK CABLE. SPLICE CONNECTION DETAILS TO BE PROVIDED BY THE CITY OF SANTA FE TRAFFIC SIGNAL OPERATIONS SECTION.

ITS COMMUNICATION NOTES

1. THE MINIMUM ALLOWABLE BEND RADIUS FOR ALL COMMUNICATIONS CONDUIT IS TWELVE (12) INCHES. THIS APPLIES TO BOTH HORIZONTAL AND VERTICAL.
2. FIBER OPTIC SPLICE ENCLOSURES SHALL BE SECURELY FASTENED TO THE INSIDE OF THE ITS MANHOLE.

PAUL F. STEFFIN — NEW MEXICO — 13332 — REGISTERED PROFESSIONAL ENGINEER — 10/6/2015

NO.	DESCRIPTION	DATE	BY
3			
2			
1			

REVISIONS (OR CHANGE NOTICES)

CITY OF SANTA FE

CERRILLOS ROAD PHASE IIC
CAMINO CARLOS REY TO
LLANO STREET
SANTA FE COUNTY

INTERCONNECT PLAN
CERRILLOS ROAD

SCALE
1"=50' HORIZ.

DESIGNED BY: PB	DRAWN BY: PB	CHECKED BY: JB
DATE: 08/07/15	DATE: 08/07/15	DATE: 08/07/15

J:\33693 Cerrillos Ph IIC\04 Engineering–33693\Plans\9_Sheets\9–17_9–20 Interconnect Plan.dwg Sep 30, 2015 – 3:39pm Saved By: chavezdx

N.M. PROJECT NO. CN S100130 SHEET NO. 9–20

Bohannan ▲ Huston Inc.
Courtyard I 7500 Jefferson St. NE Albuquerque, NM 87109-4335
ENGINEERING ▲ SPATIAL DATA ▲ ADVANCED TECHNOLOGIES

CITY OF SANTA FE	SHEET
NEW MEXICO PROJECT NO.	NO.
CN S100130	10-1

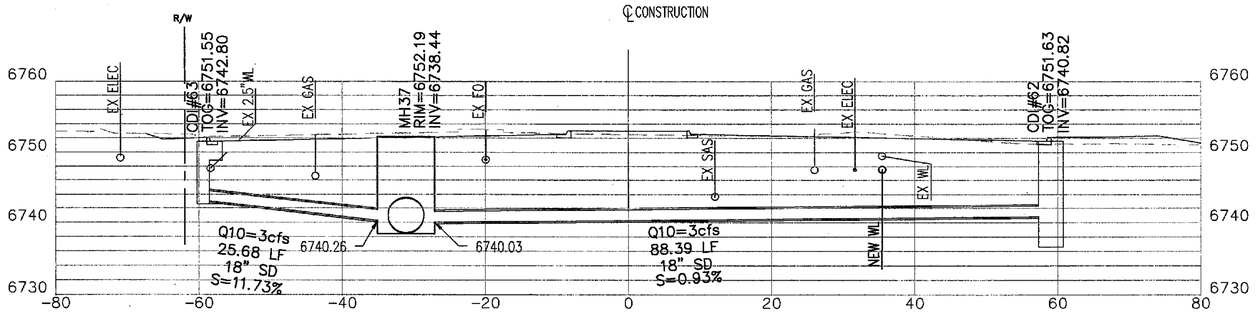

STATION 142+24.10
31.04' LT BUILD MH #37 TYPE "T"
58.33' LT BUILD CDI #63 MOD. TYPE 1-F
58.83' RT BUILD CDI #62 MOD. TYPE B
CONNECT CDI #63 AND MH #37 W/18"x25.68' LATERAL
CONNECT CDI #62 AND MH #37 W/18"x88.39' LATERAL
SERIALS: DETAIL SHEETS 2-16 THRU 2-21

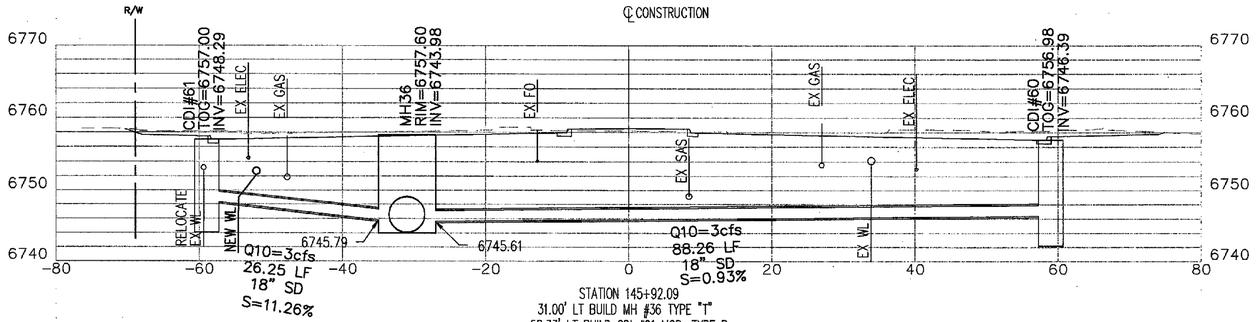

STATION 145+92.09
31.00' LT BUILD MH #36 TYPE "T"
58.33' LT BUILD CDI #61 MOD. TYPE B
58.33' RT BUILD CDI #60 MOD. TYPE B
CONNECT CDI #61 AND MH #36 W/18"x26.25' LATERAL
CONNECT CDI #60 AND MH #36 W/18"x88.26' LATERAL
SERIALS: DETAIL SHEETS 2-16 THRU 2-21

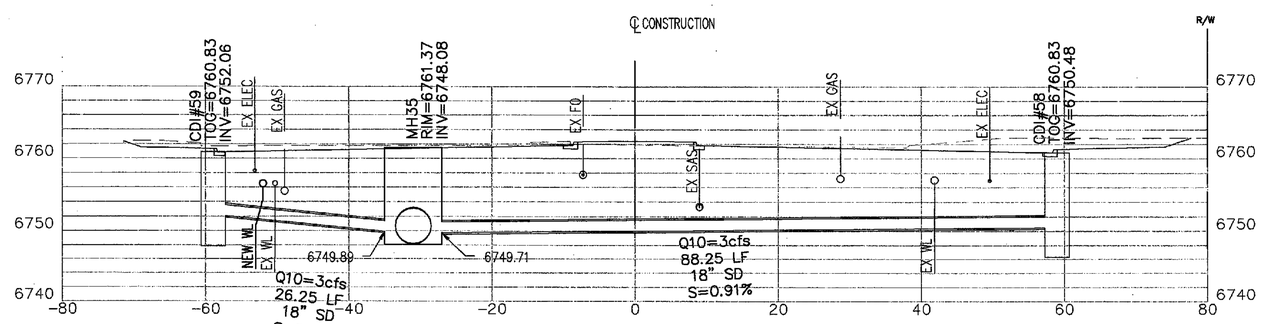

STATION 148+65.03
31.00' LT BUILD MH #35 TYPE "T"
58.33' LT BUILD CDI #59 MOD. TYPE B
58.33' RT BUILD CDI #58 MOD. TYPE B
CONNECT CDI #59 AND MH #35 W/18"x26.25' LATERAL
CONNECT CDI #58 AND MH #35 W/18"x88.25' LATERAL
SERIALS: DETAIL SHEETS 2-16 THRU 2-21

NOTE:
1. ALL STRUCTURE SECTIONS CUT ALONG CENTERLINE OF PIPE.
2. TOG ELEVATION GIVEN IS ROADWAY FLOWLINE ELEVATION WHERE INLET IS TO BE CONSTRUCTED.
3. PIPE LENGTHS SHOWN ARE PLAN VIEW DISTANCES FROM CENTER OF STRUCTURE TO CENTER OF STRUCTURE. SLOPES GIVEN ARE ACTUAL PIPE SLOPES FROM EDGE OF STRUCTURE TO EDGE OF STRUCTURE.

NO.	DESCRIPTION	DATE	BY
3			
2			
1			

REVISIONS (OR CHANGE NOTICES)

ALANDREN ETLANTUS NEW MEXICO 19995 PROFESSIONAL ENGINEER

SCALE
HORIZ. 1"=10'
VERT. 1"=10'

CITY OF SANTA FE

CERRILLOS ROAD PHASE IIC
CAMINO CARLOS REY TO
LLANO STREET
SANTA FE COUNTY

STRUCTURE PLACEMENT SECTIONS

DESIGNED BY: K.S.L	DRAWN BY: L.S.M.	CHECKED BY: A.E.
DATE: 08.10.15	DATE: 08.10.15	DATE: 08.10.15

N.M. PROJECT NO. CN S100130 SHEET NO. 10-1

P:\20140158\WR\Design\plans\Phase IIC\20140158_12_StrSect-01.dwg
Oct 01, 2015 - 1:16pm

Bohannan ▲ Huston inc.
Courtyard I 7600 Jefferson St. NE Albuquerque, NM 87109-4335
ENGINEERING ▲ SPATIAL DATA ▲ ADVANCED TECHNOLOGIES

CITY OF SANTA FE	SHEET
NEW MEXICO PROJECT NO.	NO.
CN S100130	10-2

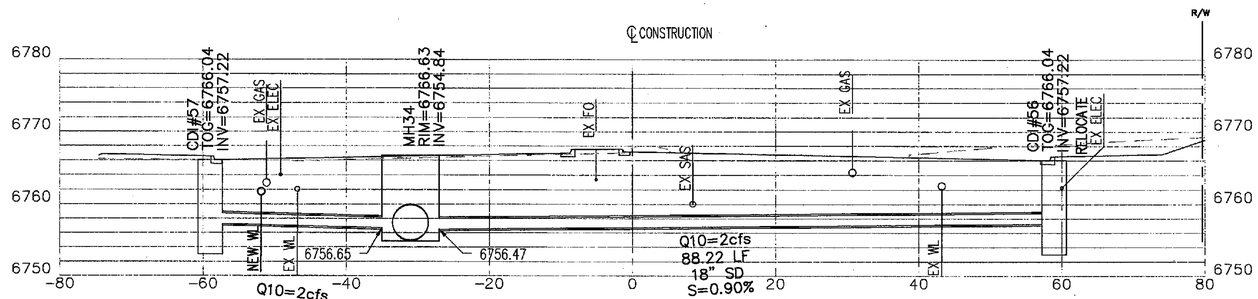

STATION 153+04.53
31.00' LT BUILD MH #34 TYPE "T"
58.33' LT BUILD CDI #57 MOD. TYPE B
58.33' RT BUILD CDI #56 MOD. TYPE B
CONNECT CDI #57 AND MH #34 W/18"x26.25' LATERAL
CONNECT CDI #56 AND MH #34 W/18"x88.22' LATERAL
SERIALS: DETAIL SHEETS 2-16 THRU 2-21

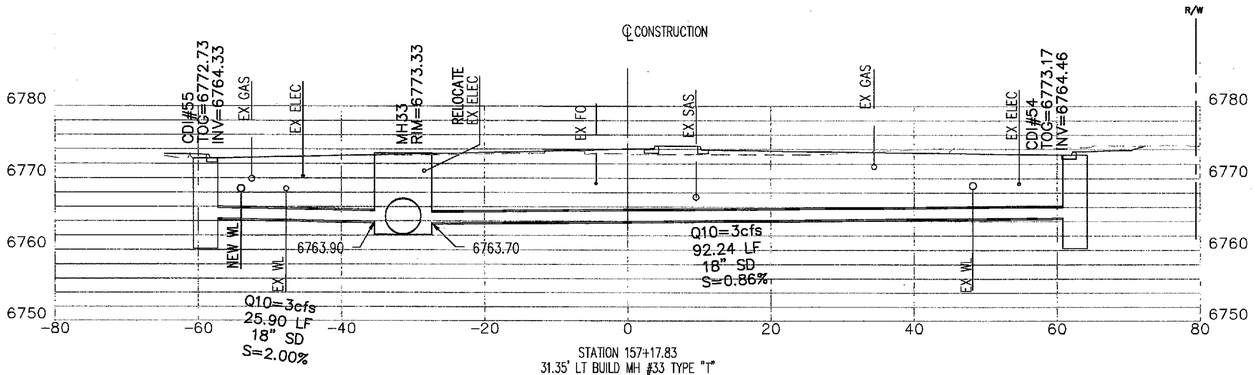

STATION 157+17.83
31.35' LT BUILD MH #33 TYPE "T"
58.33' LT BUILD CDI #55 MOD. TYPE B
58.33' RT BUILD CDI #54 MOD. TYPE B
CONNECT CDI #55 AND MH #33 W/18"x25.90' LATERAL
CONNECT CDI #54 AND MH #33 W/18"x92.24' LATERAL
SERIALS: DETAIL SHEETS 2-16 THRU 2-21

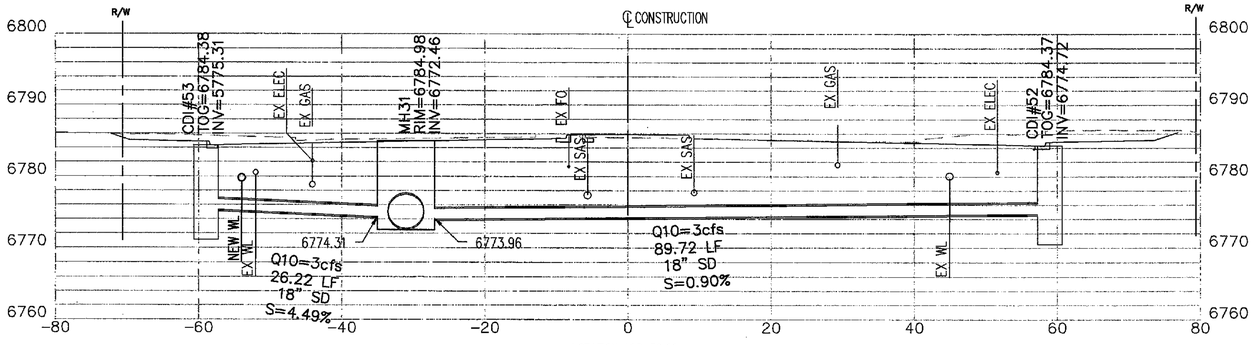

STATION 163+30.22
31.03' LT BUILD MH #31 TYPE "T"
58.33' LT BUILD CDI #53 MOD. TYPE B
53.08' RT BUILD CDI #52 MOD. TYPE B
CONNECT CDI #53 AND MH #31 W/18"x26.22' LATERAL
CONNECT CDI #52 AND MH #31 W/18"x89.72' LATERAL
SERIALS: DETAIL SHEETS 2-16 THRU 2-21

NOTE:
1. ALL STRUCTURE SECTIONS CUT ALONG CENTERLINE OF PIPE.
2. TOG ELEVATION GIVEN IS ROADWAY FLOWLINE ELEVATION WHERE INLET IS TO BE CONSTRUCTED.
3. PIPE LENGTHS SHOWN ARE PLAN VIEW DISTANCES FROM CENTER OF STRUCTURE TO CENTER OF STRUCTURE. SLOPES GIVEN ARE ACTUAL PIPE SLOPES FROM EDGE OF STRUCTURE TO EDGE OF STRUCTURE.

NO.	DESCRIPTION	DATE	BY
3			
2			
1			

REVISIONS (OR CHANGE NOTICES)

ALANDREN ETLANTUS NEW MEXICO 19995 PROFESSIONAL ENGINEER

SCALE
HORIZ. 1"=10'
VERT. 1"=10'

CITY OF SANTA FE

CERRILLOS ROAD PHASE IIC
CAMINO CARLOS REY TO
LLANO STREET
SANTA FE COUNTY

STRUCTURE PLACEMENT SECTIONS

DESIGNED BY: K.S.L	DRAWN BY: L.S.M.	CHECKED BY: A.E.
DATE: 08.10.15	DATE: 08.10.15	DATE: 08.10.15

N.M. PROJECT NO. CN S100130 SHEET NO. 10-2

P:\20140158\WR\Design\plans\Phase IIC\20140158_13_StrSect-02.dwg
Oct 01, 2015 - 1:16pm

Bohannan ▲ Huston Inc.
Courtyard I 7500 Jefferson St. NE Albuquerque, NM 87109-4335
ENGINEERING ▲ SPATIAL DATA ▲ ADVANCED TECHNOLOGIES

CITY OF SANTA FE	SHEET
NEW MEXICO PROJECT NO.	NO.
CN S100130	10-3

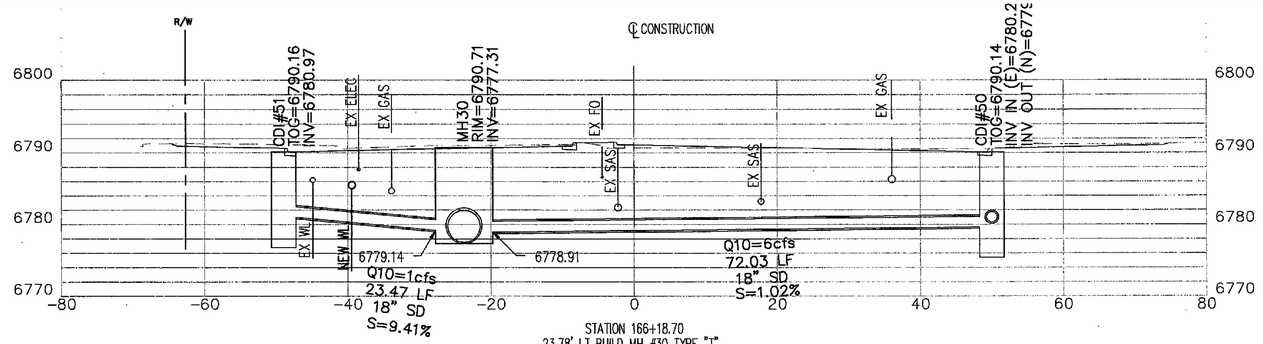

STATION 166+18.70
23.78' LT BUILD MH #30 TYPE "T"
48.33' LT BUILD CDI #51 MOD. TYPE B
49.33' RT BUILD CDI #50 MOD. TYPE B
CONNECT CDI #51 AND MH #30 W/18"x23.47' LATERAL
CONNECT CDI #50 AND MH #30 W/18"x72.03' LATERAL
SERIALS: DETAIL SHEETS 2-16 THRU 2-21

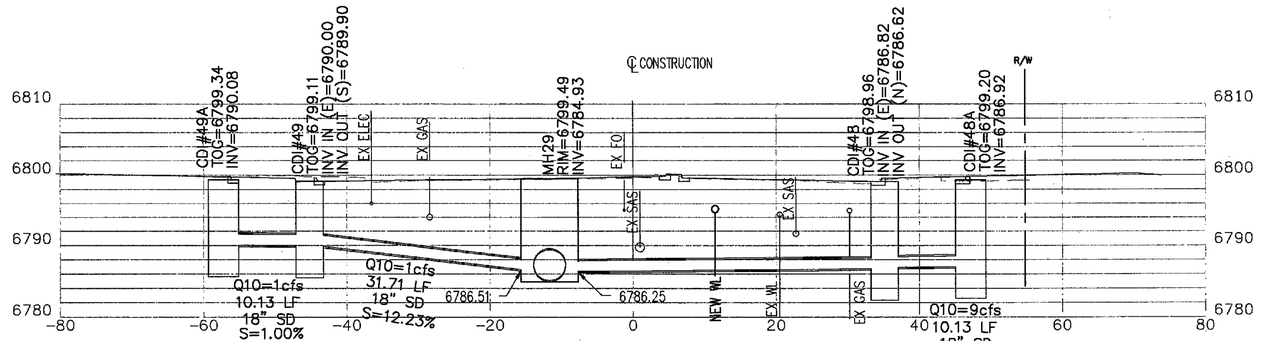

STATION 170+60.23
11.63' LT BUILD MH #29 TYPE "T"
42.33' LT BUILD CDI #49 MOD. TYPE B
34.33' RT BUILD CDI #48 MOD. TYPE B
42.33' LT BUILD CDI #49A MOD. TYPE B
34.33' RT BUILD CDI #48A MOD. TYPE B
CONNECT CDI #49A AND CDI #49 W/18"x10.13' LATERAL
CONNECT CDI #49 AND MH #29 W/18"x31.71' LATERAL
CONNECT CDI #48A AND CDI #48 W/18"x10.13' LATERAL
CONNECT CDI #48 AND MH #29 W/18"x44.88' LATERAL
SERIALS: DETAIL SHEETS 2-16 THRU 2-21

NOTE:
1. ALL STRUCTURE SECTIONS CUT ALONG CENTERLINE OF PIPE.
2. TOG ELEVATION GIVEN IS ROADWAY FLOWLINE ELEVATION WHERE INLET IS TO BE CONSTRUCTED.
3. PIPE LENGTHS SHOWN ARE PLAN VIEW DISTANCES FROM CENTER OF STRUCTURE TO CENTER OF STRUCTURE. SLOPES GIVEN ARE ACTUAL PIPE SLOPES FROM EDGE OF STRUCTURE TO EDGE OF STRUCTURE.

NO.	DESCRIPTION	DATE	BY
3			
2			
1			

REVISIONS (OR CHANGE NOTICES)

ALANDREN ETLANTUS NEW MEXICO 19995 PROFESSIONAL ENGINEER

SCALE
HORIZ. 1"=10'
VERT. 1"=10'

CITY OF SANTA FE

CERRILLOS ROAD PHASE IIC
CAMINO CARLOS REY TO
LLANO STREET
SANTA FE COUNTY

STRUCTURE PLACEMENT SECTIONS

DESIGNED BY: K.S.L	DRAWN BY: L.S.M.	CHECKED BY: A.E.
DATE: 08.10.15	DATE: 08.10.15	DATE: 08.10.15

N.M. PROJECT NO. CN S100130 SHEET NO. 10-3

P:\20140158\WR\Design\plans\Phase IIC\20140158_14_StrSect-01.dwg
Oct 01, 2015 - 1:16pm

PARSONS BRINCKERHOFF

CITY OF SANTA FE	SHEET
NEW MEXICO PROJECT NO.	NO.
CN S100130	11-1

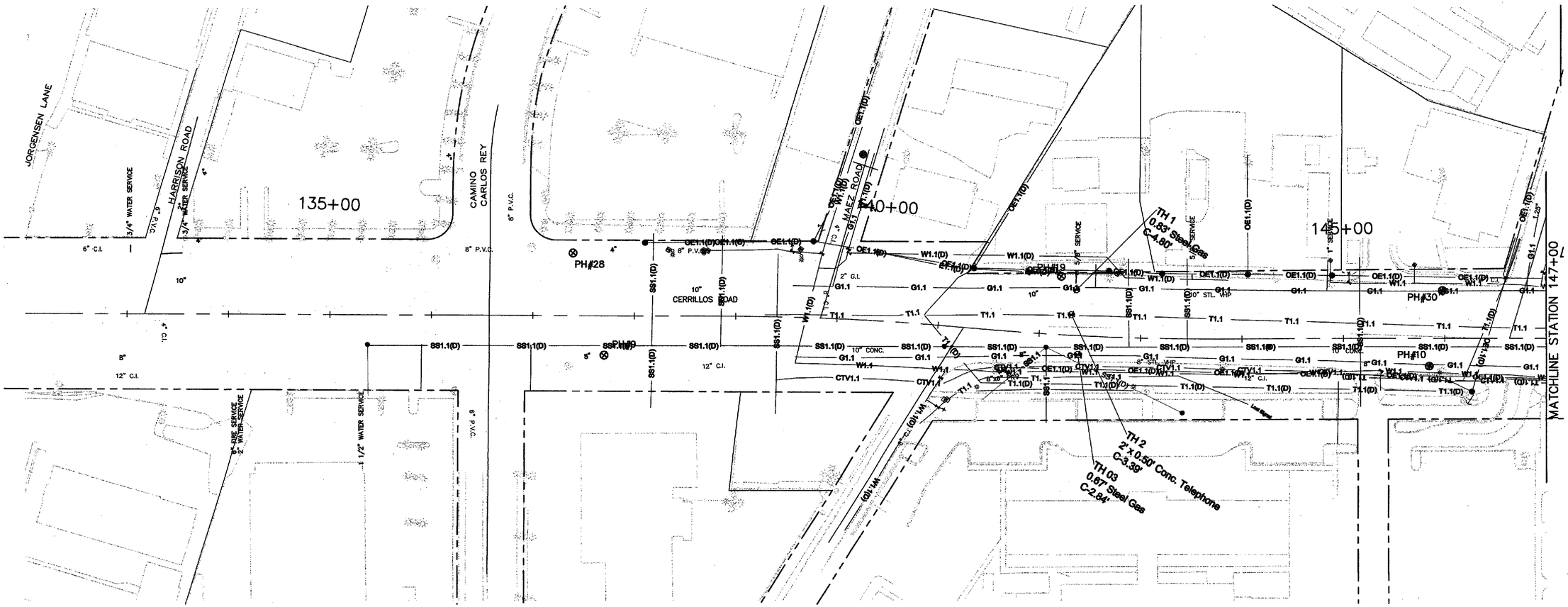

POTHOLE #	STATION	OFFSET	EXISTING TOP GROUND ELEVATION	DEPTH	UTILITY
28	137+39.24	62.0 LT.	6745.03	55"	WATER
9	137+70.30	18.2 RT.	6745.30	38"	GAS
19	142+18.36	58.1 LT.	6752.05	51"	WATER
10	145+84.57	27.4 RT.	6758.04	51"	GAS
30	145+97.68	47.7 LT.	6758.06	69"	GAS

UTILITY LEGEND

Quality Level B	Quality Level D	Utility:
T1.X	T1.X(D)	TELEPHONE - Century Link
CTV1.X	CTV1.X(D)	CABLE TV - Comcast
	OE1.X(D)	OH ELECTRIC - PNM
SL1.X	SL1.X(D)	STREET LIGHT - PNM / NMDOT
E1.X	E1.X(D)	ELECTRIC - PNM
W1.X	W1.X(D)	WATER - City of Santa Fe
SS1.X	SS1.X(D)	SANITARY SEWER - City of Santa Fe
G1.X	G1.X(D)	GAS - New Mexico Gas

JAMES H. BUCKMAN NEW MEXICO 13062 REGISTERED PROFESSIONAL ENGINEER 10/8/15

NO.	DESCRIPTION	DATE	BY
3			
2			
1			

REVISIONS (OR CHANGE NOTICES)

CITY OF SANTA FE

CERRILLOS ROAD PHASE IIC
CAMINO CARLOS REY TO
LLANO STREET
SANTA FE COUNTY

EXISTING UTILITIES

SCALE
HORIZ. 1"=50'

DESIGNED BY: PB	DRAWN BY: PB	CHECKED BY: JB
DATE: 08/07/15	DATE: 08/07/15	DATE: 08/07/15

J:\33693 Cerrillos Ph IIC\04 Engineering-33693\Plans\11_Sheets\01 Existing Utilities.dwg Oct 07, 2015 - 10:11am Saved By: buckman

N.M. PROJECT NO. CN S100130 SHEET NO. 11-1

PARSONS BRINCKERHOFF

CITY OF SANTA FE	SHEET
NEW MEXICO PROJECT NO.	NO.
CN S100130	11–2

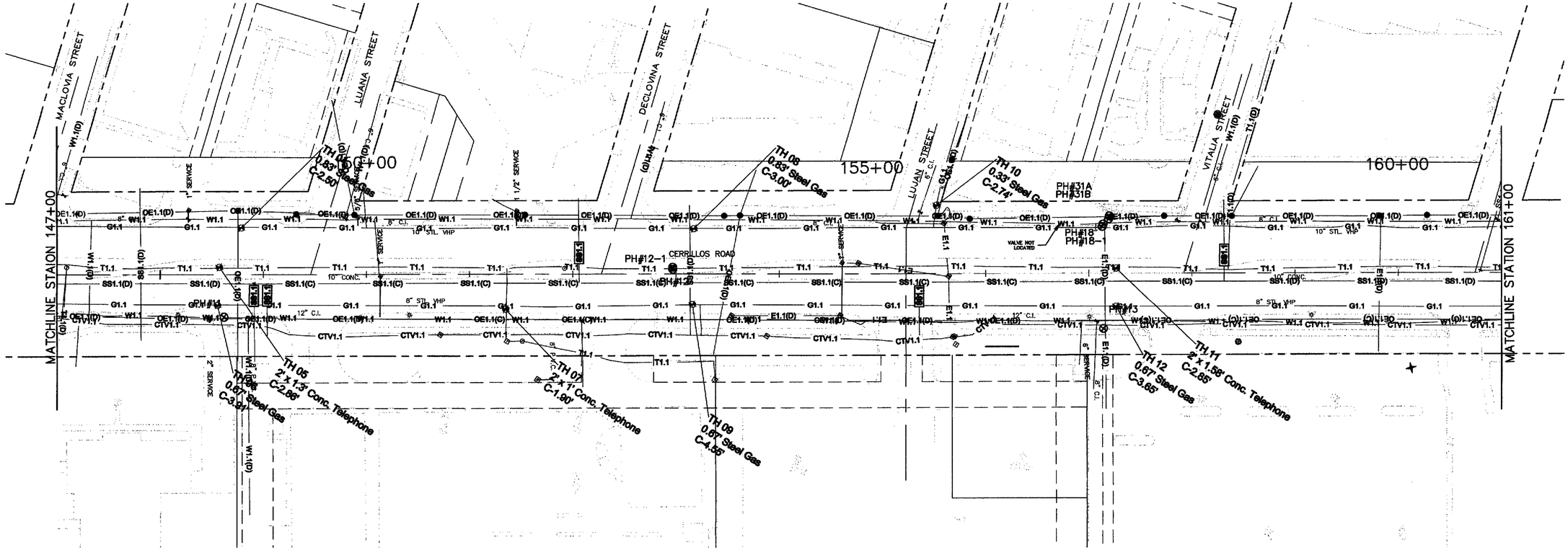

POTHOLE #	STATION	OFFSET	EXISTING TOP GROUND ELEVATION	DEPTH	UTILITY
11	148+61.96	41.9 RT.	6762.67	55"	WATER
12	152+96.74	4.7 LT.	6767.65	38" TO 56"	COMM./F.O.
18-1	157+13.01	45.3 LT.	6773.04	32"	ELECTRIC
18	157+13.85	48.1 LT.	6773.08	48"	ELECTRIC
13	157+14.29	54.3 RT.	6774.32	28"	ELECTRIC
31B	157+19.38	53.1 LT.	6773.32	36"	GAS
31A	157+20.08	55.8 LT.	6773.54	27"	ELECTRIC

UTILITY LEGEND

Quality Level B	Quality Level D	Utility:
T1.X	T1.X(D)	TELEPHONE - Century Link
CTV1.X	CTV1.X(D)	CABLE TV - Comcast
	OE1.X(D)	OH ELECTRIC - PNM
SL1.X	SL1.X(D)	STREET LIGHT - PNM / NMDOT
E1.X	E1.X(D)	ELECTRIC - PNM
W1.X	W1.X(D)	WATER - City of Santa Fe
SS1.X	SS1.X(D)	SANITARY SEWER - City of Santa Fe
G1.X	G1.X(D)	GAS - New Mexico Gas

JAMES H. BUCKMAN NEW MEXICO 13062 REGISTERED PROFESSIONAL ENGINEER 10/9/15

NO.	DESCRIPTION	DATE	BY
3			
2			
1			

REVISIONS (OR CHANGE NOTICES)

CITY OF SANTA FE

CERRILLOS ROAD PHASE IIC
CAMINO CARLOS REY TO
LLANO STREET
SANTA FE COUNTY

EXISTING UTILITIES

SCALE
HORIZ. 1"=50'

DESIGNED BY: PB	DRAWN BY: PB	CHECKED BY: JB
DATE: 08/07/15	DATE: 08/07/15	DATE: 08/07/15

J:\33693 Cerrillos Ph IIC\04 Engineering-33693\Plans\11_Sheets\02 Existing Utilities.dwg Oct 07, 2015 – 10:13am Saved By: buckman

N.M. PROJECT NO. CN S100130 SHEET NO. 11–2

PARSONS BRINCKERHOFF

CITY OF SANTA FE	SHEET
NEW MEXICO PROJECT NO.	NO.
CN S100130	11-3

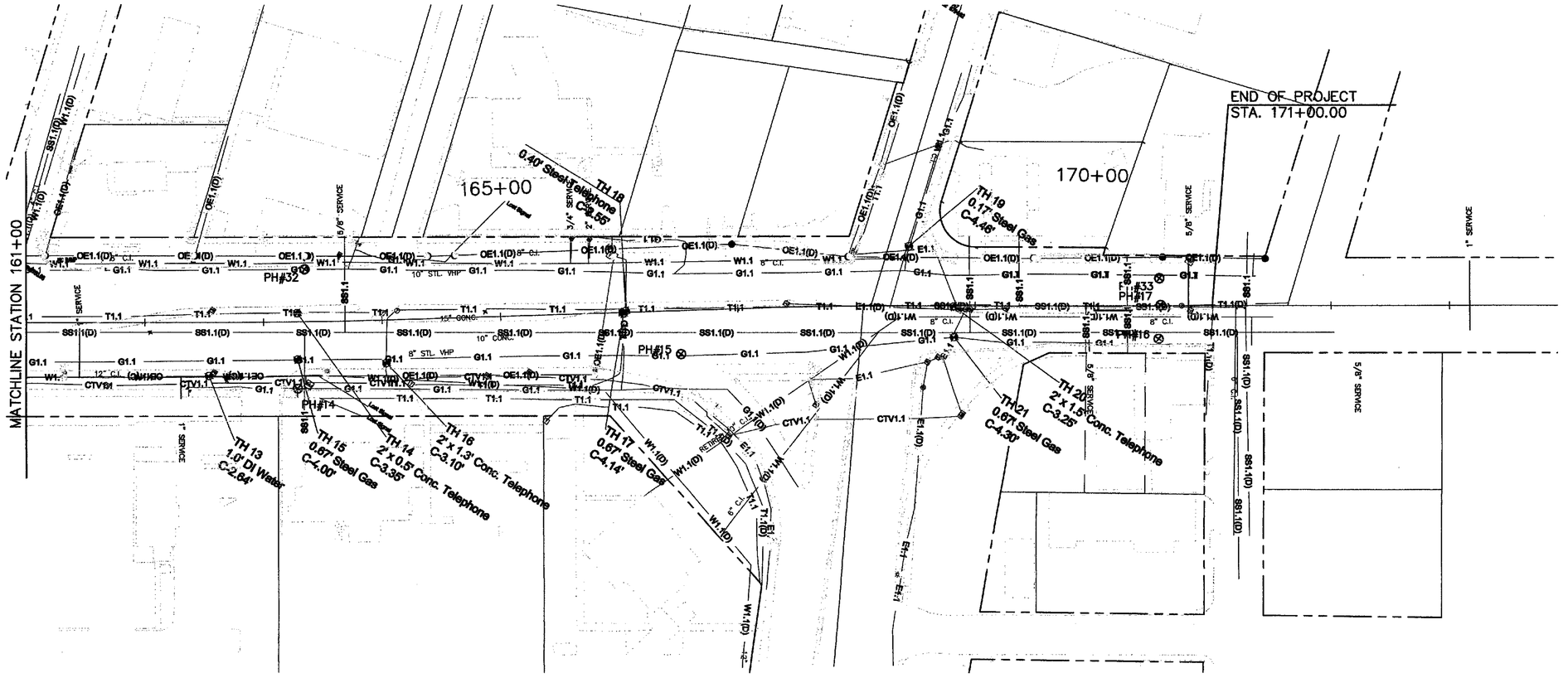

POTHOLE #	STATION	OFFSET	EXISTING TOP GROUND ELEVATION	DEPTH	UTILITY
14	163+28.39	56.7 RT.	6786.33	28"	GAS "T"
32	163+35.30	43.9 LT.	6785.01	60"	GAS
15	166+51.03	36.9 RT.	6781.56	42"	GAS
16	170+54.79	28.2 RT.	6798.94	39"	GAS
33	170+55.68	26.3 LT.	6799.29	55"	GAS
17	170+56.57	0.5 LT	6799.72	49"	COMM./F.O.

UTILITY LEGEND

Quality Level B	Quality Level D	Utility:
T1.X	T1.X(D)	TELEPHONE - Century Link
CTV1.X	CTV1.X(D)	CABLE TV - Comcast
	OE1.X(D)	OH ELECTRIC - PNM
SL1.X	SL1.X(D)	STREET LIGHT - PNM / NMDOT
E1.X	E1.X(D)	ELECTRIC - PNM
W1.X	W1.X(D)	WATER - City of Santa Fe
SS1.X	SS1.X(D)	SANITARY SEWER - City of Santa Fe
G1.X	G1.X(D)	GAS - New Mexico Gas

JAMES H. BUCKMAN NEW MEXICO 13062 REGISTERED PROFESSIONAL ENGINEER 12/9/15

NO.	DESCRIPTION	DATE	BY
3			
2			
1			

REVISIONS (OR CHANGE NOTICES)

CITY OF SANTA FE

CERRILLOS ROAD PHASE IIC
CAMINO CARLOS REY TO
LLANO STREET
SANTA FE COUNTY

EXISTING UTILITIES

SCALE
HORIZ. 1"=50'

DESIGNED BY: PB	DRAWN BY: PB	CHECKED BY: JB
DATE: 08/07/15	DATE: 08/07/15	DATE: 08/07/15

J:\33693 Cerrillos Ph IIC\04 Engineering-33693\Plans\11_Sheets\03 Existing Utilities.dwg Oct 07, 2015 - 10:24am Saved By: buckman

N.M. PROJECT NO. CN S100130 SHEET NO. 11-3

WATERLINE GENERAL NOTES

1) CONTRACTOR WILL NOTIFY THE WATER DIVISION 5 DAYS PRIOR TO COMMENCEMENT OF WORK TO COORDINATE WITH PROJECT MANAGER AND INSPECTOR. CONTACT ROBERT JORGENSEN AT 505-955-4265.

2) WATERLINE CONSTRUCTION SHALL BE DONE IN ACCORDANCE WITH THE PUBLIC UTILITES DEPARTMENT, WATER DIVISION, CONSTRUCTION STANDARDS AND SPECIFICATIONS.

3) ALL EASEMENTS WILL BE DEDICATED, CLEARED AND GRADED, AND STAKED PRIOR TO WATER LINE INSTALLATION.

4) ALL STREETS WILL BE CUT TO GRADE PRIOR TO WATER LINE INSTALLATION, UNLESS OTHERWISE APPROVED BY THE WATER DIVISION.

5) ALL LOT CORNERS WILL BE STAKED PRIOR TO SERVICE LINE INSTALLATION. CURB AND GUTTER WILL BE INSTALLED PRIOR TO WATER LINE INSTALLATION UNLESS OTHERWISE APPROVED IN WRITING BY THE WATER DIVISION.

6) THE CONTRACTOR SHALL PROVIDE CONSTRUCTION STAKING UTILIZING THE APPROPRIATE RIGHT-OF-WAY MAPS, SIGNED PLATS AND WATER DIVISION DRAWINGS.

7) MATERIAL SUBMITTAL SHALL BE APPROVED BY WATER DIVISION PRIOR TO CONSTRUCTION.

8) CONTACT NEW MEXICO ONE-CALL AT 1-800-321-2537, TWO WORKING DAYS IN ADVANCE OF CONSTRUCTION FOR UTILITY SPOTS.

9) A MINIMUM OF 4 FEET COVER OVER TOP OF PIPE TO BE MAINTAINED.

10) CONTRACTOR TO SUBMIT VALVE TIES TO WATER DIVISION WITHIN 5 DAYS OF COMPLETION.

11) CONTRACTOR SHALL SUBMIT AS-BUILT CONSTRUCTION PACKET WITHIN FIVE (5) DAYS OF COMPLETION OF CONSTRUCTION INCLUDING : VALVE TIES, AS-BUILT DRAWINGS (INCLUDING, BUT NOT LIMITED TO: FITTING-TO-FITTING MEASUREMENTS, SERVICE-TO-SERVICE MEASUREMENTS, CENTER OF MAIN TO CENTER OF SERVICE MEASUREMENTS, LENGTH OF MAIN INSTALLED, FITTINGS INSTALLED, ETC.) AND POTABILITY RESULTS.

12) ALL VALVE BOXES TO BE BROUGHT UP TO GRADE AFTER FIRST COURSE OF ASPHALT AND BEFORE FINAL COURSE OF ASPHALT.

13) FIRE HYDRANTS SHALL BE NUMBERED USING REFLECTIVE NUMERALS. THE REFLECTIVE NUMERALS ARE TO BE OBTAINED BY THE CONTRACTOR FROM THE WATER DIVISION FIELD REPRESENTATIVE AT THE START OF CONSTRUCTION. NUMBERS SHALL BE LEGIBLE FROM THE ROAD.

14) MECHANICAL JOINT RESTRAINT DEVICES SHALL BE UTILIZED ON THIS PROJECT IN LIEU OF CONCRETE BLOCKING.

15) THE WATERLINE CONTRACTOR SHALL BE PRE-APPROVED BY THE WATER DIVISION. CONTACT WATER DIVISION FOR APPROVAL PROCEDURE.

WATERLINE CONSTRUCTION NOTES:

1) NOTE THAT ALL EXISTING UTILITIES MAY NOT BE SHOWN HEREON AND EXISTING UTILITIES SHOWN ARE IN APPROXIMATE LOCATIONS ONLY. IT IS THE CONTRACTOR'S RESPONSIBILITY TO LOCATE EXISTING UTILITIES BEFORE CONSTRUCTION.

2) ALL NEW WATERLINES SHALL BE DUCTILE IRON WITH POLYETHELENE ENCASEMENT (POLYWRAP). ALL NEW WATER SERVICE LINES SHALL BE COPPER. ALL GALVANIZED WATER SERVICES FOUND DURING CONSTRUCTION SHALL BE REPLACED WITH COPPER.

3) WATER METER BOXES TO BE RELOCATED SHALL BE PLACED PER WATER DIVISION STANDARD DRAWINGS.

4) EXISTING WATER SERVICE SHALL BE MAINTAINED DURING CONSTRUCTION. TEMPORARY WATER SHUT OFF FOR CONNECTION OF NEW MAINS WILL BE ALLOWED IF SCHEDULED 48 HOURS IN ADVANCE WITH WATER DIVISION AND BUSINESSES. COST OF TEMPORARY CONNECTIONS, BLOCKING AND CAPS REQUIRED FOR CONSTRUCTION PHASING WILL BE INCIDENTAL TO COST OF THE NEW WATER LINE.

5) EXISTING WATERLINE SHALL BE REMOVED AND DISPOSED OF WHERE NEW WATER LINE IS INSTALLED. THE COST OF REMOVAL AND DISPOSAL SHALL BE INCLUDED IN THE COST OF THE NEW WATER LINE ITEM.

6) WHERE NEW WATER MAINS ARE INSTALLED TO REPLACE EXISTING WATER MAINS:
   - ALL SERVICES, HYDRANTS AND CONNECTIONS FROM EXISTING MAIN MUST BE TRANSFERRED TO NEW MAIN.

7) WHERE POSSIBLE, PLACE NEW WATER MAINS IN UNPAVED AREAS.

8) ANY DEWATERING OF TRENCHES DUE TO NEW WATERLINE INSTALLATION SHALL BE INCIDENTAL TO THE COMPLETION OF THE PROJECT AND NO SEPARATE MEASUREMENT OR PAYMENT WILL BE MADE THEREFOR.

9) EXISTING FIRE HYDRANTS TO BE REMOVED AND REPLACED SHALL BE DELIVERED TO WATER DIVISION AS DIRECTED.

10) CONCRETE SLURRY FILL OR FLOWABLE FILL SHALL NOT BE PLACED WITHIN 4' OF ANY WATERLINE OR WATER SERVICE LINE.

11) CONTRACTOR SHALL FIELD STAKE ALL LIGHT, TRAFFIC SIGNAL, AND OTHER FOUNDATIONS PRIOR TO INSTALLATION OF WATER LINES.

WATER CONSTRUCTION NOTES, CONTINUED:

12) WATER LINES TO BE RETIRED SHALL BE ABANDONED IN PLACE. THE ABANDONED LINE SHALL BE CUT AT A MAXIMUM SPACING OF 300', AND CONCRETE PLUGS SHALL BE POURED WITH DIMENSIONS OF 6" MINIMUM BEYOND THE END OF PIPE IN ALL DIRECTIONS. THE COST OF RETIRING WATER LINES SHALL BE INCLUDED IN THE COST OF THE WATER SYSTEM, AND NO ADDITIONAL MEASUREMENT OR PAYMENT SHALL BE MADE.

SANITARY SEWER GENERAL NOTES:

1. THE CONTRACTOR SHALL NOTIFY THE WASTEWATER MANAGEMENT DIVISION AT 505-955-4650 IN ADVANCE OF COMMENCING CONSTRUCTION.
2. THE CONTRACTOR SHALL NOTIFY THE WASTEWATER MANAGEMENT DIVISION (DOUGLAS FLORES AT 505-955-4613) FOR THE PRECONSTRUCTION MEETING.
3. ALL MANHOLES MUST BE ADJUSTED TO FINAL GRADE. THE CONTRACTOR SHALL CALL THE WASTEWATER MANAGEMENT DIVISION (DOUGLAS FLORES AT 505-955-4613) FOR A FINAL MANHOLE INSPECTION.
4. REPLACE RING AND COVERS OF ANY MANHOLES WORKED ON WITH NEW FRAMES AND VENTED "CITY OF SANTA FE" COVERS. OLD MANHOLE RING & COVERS TO BE TURNED OVER TO THE CITY'S WASTEWATER MANAGEMENT DIVISION, SILER YARD. CONTACT JERRY TAPIS @ 505-955-4622 PRIOR TO DELIVERY.
5. THE CONTRACTOR SHALL BE RESPONSIBLE FOR ALL COSTS ASSOCIATED WITH ANY DAMAGES ASSOCIATED WITH CONSTRUCTION DEBRIS THAT ENTERS THE SANITARY SEWER SYSTEM.
6. THE CONTRACTOR SHALL BE RESPONSIBLE FOR ALL COSTS ASSOCIATED WITH ANY REQUIRED MAINTENANCE INCLUDING BY-PASS PUMPING OR ANY DAMAGES ASSOCIATED WITH CONSTRUCTION.
7. IN THE EVENT THAT ANY PUBLIC SANITARY SEWER LINES ARE DAMAGED DURING CONSTRUCTION, IT SHALL BE REPAIRED AS APPROVED BY THE CITY OF SANTA FE'S WASTEWATER MANAGEMENT DIVISION AND TELEVISED AFTER COMPLETING THE REPAIR, AND AFTER BACKFILLING. THE COST SHALL BE PAID BY THE CONTRACTOR.
8. THE CONTRACTOR SHALL CALL THE WASTEWATER MANAGEMENT DIVISION (DOUGLAS FLORES AT 505- 955-4613) FOR A FINAL MANHOLE INSPECTION. THIS INSPECTION WILL BE ISOLATED TO THE MANHOLES. THE CITY'S PLUMBING AND MECHANICAL INSPECTOR'S WILL CONDUCT ALL OTHER NECESSARY PLUMBING INSPECTIONS. NOTE: THE CITY'S PLUMBING AND MECHANICAL INSPECTORS WILL INSPECT THE INDIVIDUAL SEWER SERVICE TAPS AND LATERALS, WHICH CONNECT TO THE PUBLIC SANITARY SEWER.
9. IN THE EVENT OF ANY TYPE OF SANITARY SEWER BLOCKAGE CALL (505) 955- 4650 IMMEDIATELY.
10. A MINIMUM 12 INCHES OF VERTICAL CLEARANCE SHALL BE PROVIDED BETWEEN THE SEWER LINE AND ANY STORM DRAIN PIPING.
11. SANITARY SEWER CONSTRUCTION SHALL BE DONE IN ACCORDANCE WITH THE LATEST NEW DEPARTMENT OF TRANSPORTATION STANDARD SPECIFICATIONS FOR HIGHWAY AND BRIDGE CONSTRUCTION.
12. BYPASS PUMPING SHALL HAVE CAPACITY FOR 200% OF EXPECTED PEAK FLOW. BYPASS SYSTEM SHALL REQUIRE TWO PUMPS: ONE FOR PUMPING AND ONE FOR BACKUP.
13. IN THE EVENT THAT ANY SANITARY SEWER MAINS ARE DAMAGED DURING CONSTRUCTION, IT SHALL BE REPAIRED AS APPROVED BY THE CITY OF SANTA FE WASTEWATER MANAGEMENT DIVISION AND TELEVISED AFTER COMPLETING THE REPAIR AFTER BACKFILLING. THE COST SHALL BE PAID FOR BY THE CONTRACTOR.
14. WHERE NEW SEWER LINES ARE INSTALLED TO REPLACE EXISTING LINES, ALL EXISTING SERVICES MUST BE TRANSFERRED TO NEW MAIN.
15. THE CONTRACTOR WILL BE REQUIRED TO TELEVISE THE NEW 10" SEWER LINE AFTER BACKFILLING AND PROVIDE A VIDEO& LOG TO THE CITY OF SANTA FE PUBLIC WORKS DEPARTMENT UPON COMPLETION OF THE PROJECT.

PARSONS BRINCKERHOFF

CITY OF SANTA FE	SHEET
NEW MEXICO PROJECT NO.	NO.
CN S100130	11-4

SANITARY SEWER CONSTRUCTION NOTES:

1) IN THE EVENT THAT ANY SANITARY SEWER MAINS ARE DAMAGED DURING CONSTRUCTION, THEY SHALL BE REPAIRED AS APPROVED BY THE CITY OF SANTA FE WASTEWATER MANAGEMENT DEPARTMENT AND TELEVISED AFTER COMPLETING THE REPAIR, AFTER BACKFILLING. THE COST SHALL BE PAID FOR BY THE CONTRACTOR.

2) ADJUST ALL SANITARY SEWER MANHOLES TO FINISHED GRADE.

3) ALL SANITARY SEWER MANHOLES SHALL RECEIVE NEW FRAMES AND VENTED "CITY OF SANTA FE" LIDS PER THE CITY STANDARD DETAILS .
   - ALL OLD MANHOLE FRAMES AND LIDS SHALL BE RETURNED TO THE CITY OF SANTA FE SILER YARD.

4) CONCRETE SLURRY FILL OR FLOWABLE FILL SHALL NOT BE PLACED WITHIN 4' OF ANY SEWER LINE.

UTILITY LEGEND

- RIGHT OF WAY LINE
- CENTERLINE OF STREET
- EXISTING POWER OR TELEPHONE POLE
- PROPOSED POWER OR TELEPHONE POLE
- EXISTING MANHOLE
- PROPOSED MANHOLE
- EXISTING SANITARY SEWER LINES (SAS)
- PROPOSED WATER CAP OR PLUG
- PROPOSED WATER LINES (W)
- EXISTING FIRE HYDRANT (HYD #)
- PROPOSED FIRE HYDRANT
- EXISTING GATE VALVE
- PROPOSED GATE VALVE
- EXISTING WATER METERS
- PROPOSED WATER METER

UTILITY CONTACTS

GAS:
NEW MEXICO GAS COMPANY
4565 STATE ROAD 14
SANTA FE, NM 87504
FRANK ARAGON, (505) 473-7202

ELECTRIC:
PNM
4565 STATE ROAD 14
SANTA FE, NM 87504
DONALD FERRIS, (505) 473-3279

PHONE:
CENTURYLINK
2701 W. SAWMILL
SANTA FE, NM 87505
DOUG DALE, (505) 473-2194

WATER:
CITY OF SANTA FE WATER DIVISION
P.O. BOX 16060
SANTA FE, NM 87506
ROBERT JORGENSEN, (505) 955-4265

CABLE TV:
COMCAST CABLE OF SANTA FE
2534 CAMINO ENTRADA
SANTA FE, NM 87501
DAVE AIKIN, (505) 438-5830

SEWER:
CITY OF SANTA FE WASTEWATER MANAGEMENT DIVISION
73 PASEO REAL
SANTA FE, NM 87501
DOUGLAS FLORES, (505) 955-4613

TRAFFIC SIGNALS:
CITY OF SANTA FE
SIGNAL MANAGER, 955-2320

NO.	DESCRIPTION	DATE	BY
3			
2			
1			

REVISIONS (OR CHANGE NOTICES)

JAMES H. BUCKMAN NEW MEXICO 13062 REGISTERED PROFESSIONAL ENGINEER 10/12/15

SCALE: NO SCALE

DESIGNED BY: PB	DRAWN BY: PB	CHECKED BY: JB
DATE: 08/07/15	DATE: 08/07/15	DATE: 08/07/15

CITY OF SANTA FE

CERRILLOS ROAD PHASE IIC
CAMINO CARLOS REY TO
LLANO STREET
SANTA FE COUNTY

WATER AND SANITARY SEWER
GENERAL NOTES AND LEGEND

PARSONS BRINCKERHOFF

CITY OF SANTA FE	SHEET
NEW MEXICO PROJECT NO.	NO.
CN S100130	11-5

ITEM NO. 663206
WATER SYSTEM LUMP SUM SCHEDULE

ITEM	DESCRIPTION (CIP = COMPLETE IN PLACE)	UNIT	QUANTITY	UNIT PRICE	TOTAL
70	**4" DI WATER MAIN, CIP.** PAYMENT FOR WATER MAIN SHALL BE MADE AT THE UNIT PRICE PER LINEAR FOOT OF EACH DIAMETER AND TYPE OF PIPE, AS MEASURED ALONG THE PIPE CENTER LINE FROM CENTER OF FITTING TO CENTER OF FITTING. WORK SHALL INCLUDE CONSTRUCTION STAKING, EXCAVATING TRENCH TO ANY DEPTH, INSTALLING PIPE AT ANY DEPTH PER THE PLANS AND SPECIFICATIONS, JOINTING AND COUPLING MATERIALS, POLYWRAP, INSTALLING LOCATING WIRE AND MARKER TAPE, BACKFILLING AND COMPACTING, TESTING SOIL DENSITY, TESTING HYDROSTATIC PRESSURE, FLUSHING, DISINFECTING, TESTING POTABILITY AND AS-BUILT RECORD OF FINISH PIPELINE GRADE (CONTRACTOR TO FURNISH RECORD DRAWINGS TO SDCW), AND ANY OTHER INCIDENTAL ITEMS REQUIRED TO COMPLETE THE WORK.	LIN. FT.	80		
75	**6" DI WATER MAIN, CIP.** PAYMENT FOR WATER MAIN SHALL BE MADE AT THE UNIT PRICE PER LINEAR FOOT OF EACH DIAMETER AND TYPE OF PIPE, AS MEASURED ALONG THE PIPE CENTER LINE FROM CENTER OF FITTING TO CENTER OF FITTING. WORK SHALL INCLUDE CONSTRUCTION STAKING, EXCAVATING TRENCH TO ANY DEPTH, INSTALLING PIPE AT ANY DEPTH PER THE PLANS AND SPECIFICATIONS, JOINTING AND COUPLING MATERIALS, POLYWRAP, INSTALLING LOCATING WIRE AND MARKER TAPE, BACKFILLING AND COMPACTING, TESTING SOIL DENSITY, TESTING HYDROSTATIC PRESSURE, FLUSHING, DISINFECTING, TESTING POTABILITY AND AS-BUILT RECORD OF FINISH PIPELINE GRADE (CONTRACTOR TO FURNISH RECORD DRAWINGS TO SDCW), AND ANY OTHER INCIDENTAL ITEMS REQUIRED TO COMPLETE THE WORK.	LIN. FT.	790		
95	**8" DI WATER MAIN, CIP.** PAYMENT FOR WATER MAIN SHALL BE MADE AT THE UNIT PRICE PER LINEAR FOOT OF EACH DIAMETER AND TYPE OF PIPE, AS MEASURED ALONG THE PIPE CENTER LINE FROM CENTER OF FITTING TO CENTER OF FITTING. WORK SHALL INCLUDE CONSTRUCTION STAKING, EXCAVATING TRENCH TO ANY DEPTH, INSTALLING PIPE AT ANY DEPTH PER THE PLANS AND SPECIFICATIONS, JOINTING AND COUPLING MATERIALS, POLYWRAP, INSTALLING LOCATING WIRE AND MARKER TAPE, BACKFILLING AND COMPACTING, TESTING SOIL DENSITY, TESTING HYDROSTATIC PRESSURE, FLUSHING, DISINFECTING, TESTING POTABILITY AND AS-BUILT RECORD OF FINISH PIPELINE GRADE (CONTRACTOR TO FURNISH RECORD DRAWINGS TO SDCW), AND ANY OTHER INCIDENTAL ITEMS REQUIRED TO COMPLETE THE WORK.	LIN. FT.	3400		
115	**12" DI WATER MAIN, CIP.** PAYMENT FOR WATER MAIN SHALL BE MADE AT THE UNIT PRICE PER LINEAR FOOT OF EACH DIAMETER AND TYPE OF PIPE, AS MEASURED ALONG THE PIPE CENTER LINE FROM CENTER OF FITTING TO CENTER OF FITTING. WORK SHALL INCLUDE CONSTRUCTION STAKING, EXCAVATING TRENCH TO ANY DEPTH, INSTALLING PIPE AT ANY DEPTH PER THE PLANS AND SPECIFICATIONS, JOINTING AND COUPLING MATERIALS, POLYWRAP, INSTALLING LOCATING WIRE AND MARKER TAPE, BACKFILLING AND COMPACTING, TESTING SOIL DENSITY, TESTING HYDROSTATIC PRESSURE, FLUSHING, DISINFECTING, TESTING POTABILITY AND AS-BUILT RECORD OF FINISH PIPELINE GRADE (CONTRACTOR TO FURNISH RECORD DRAWINGS TO SDCW), AND ANY OTHER INCIDENTAL ITEMS REQUIRED TO COMPLETE THE WORK.	LIN. FT.	1000		
160	**FITTING INSTALLATION:** PAYMENT FOR FITTING INSTALLATION SHALL BE MADE AT THE UNIT PRICE PER POUND OF CAST OR DUCTILE IRON FITTINGS, AS MEASURED FROM THE TYLER/UNION UTILITIES CATALOG (PC-U2003), DATED APRIL 4, 2003, AND THE LATEST VERSION OF APWA. THE WEIGHT OF THE FITTING BODY ONLY SHALL BE USED AS THE BASIS FOR MEASUREMENT (BOLTS, GLANDS AND GASKETS WEIGHTS ARE NOT INCLUDED AS A BASIS OF MEASUREMENT). WORK SHALL INCLUDE INSTALLING FITTINGS, GLANDS, BOLTS, GASKETS, POLYWRAP, ALL OTHER NECESSARY JOINTING MATERIAL IN PLACE AND ANY INCIDENTAL ITEMS REQUIRED TO COMPLETE THE WORK. THRUST RESTRAINT WILL BE PAID FOR SEPARATELY UNDER THE APPROPRIATE ITEM.	LBS.	12000		
170	**4" RETAINER RING/ BOLT ON FLANGE.** PAYMENT SHALL BE MADE AT THE UNIT PRICE PER EACH SIZE OF RETAINER RING OR BOLT ON FLANGE IN PLACE. WORK SHALL INCLUDE INSTALLING MECHANICAL THRUST RESTRAINTS (RETAINER RINGS) OR BOLT ON FLANGES, GLANDS, GASKETS, BOLTS, ALL OTHER NECESSARY JOINTING MATERIAL IN PLACE AND ANY INCIDENTAL ITEMS REQUIRED TO COMPLETE THE WORK.	EACH	6		
175	**6" RETAINER RING/ BOLT ON FLANGE.** PAYMENT SHALL BE MADE AT THE UNIT PRICE PER EACH SIZE OF RETAINER RING OR BOLT ON FLANGE IN PLACE. WORK SHALL INCLUDE INSTALLING MECHANICAL THRUST RESTRAINTS (RETAINER RINGS) OR BOLT ON FLANGES, GLANDS, GASKETS, BOLTS, ALL OTHER NECESSARY JOINTING MATERIAL IN PLACE AND ANY INCIDENTAL ITEMS REQUIRED TO COMPLETE THE WORK.	EACH	43		
180	**8" RETAINER RING/ BOLT ON FLANGE.** PAYMENT SHALL BE MADE AT THE UNIT PRICE PER EACH SIZE OF RETAINER RING OR BOLT ON FLANGE IN PLACE. WORK SHALL INCLUDE INSTALLING MECHANICAL THRUST RESTRAINTS (RETAINER RINGS) OR BOLT ON FLANGES, GLANDS, GASKETS, BOLTS, ALL OTHER NECESSARY JOINTING MATERIAL IN PLACE AND ANY INCIDENTAL ITEMS REQUIRED TO COMPLETE THE WORK.	EACH	102		
190	**12" RETAINER RING/ BOLT ON FLANGE.** PAYMENT SHALL BE MADE AT THE UNIT PRICE PER EACH SIZE OF RETAINER RING OR BOLT ON FLANGE IN PLACE. WORK SHALL INCLUDE INSTALLING MECHANICAL THRUST RESTRAINTS (RETAINER RINGS) OR BOLT ON FLANGES, GLANDS, GASKETS, BOLTS, ALL OTHER NECESSARY JOINTING MATERIAL IN PLACE AND ANY INCIDENTAL ITEMS REQUIRED TO COMPLETE THE WORK.	EACH	30		
205	**4" JOINT HARNESS.** PAYMENT SHALL BE MADE AT THE UNIT PRICE PER EACH SIZE OF JOINT HARNESS IN PLACE. WORK SHALL INCLUDE INSTALLING MECHANICAL THRUST RESTRAINTS, GLANDS, GASKETS, BOLTS, ALL OTHER NECESSARY JOINTING MATERIAL IN PLACE AND ANY INCIDENTAL ITEMS REQUIRED TO COMPLETE THE WORK.	EACH	2		
210	**6" JOINT HARNESS.** PAYMENT SHALL BE MADE AT THE UNIT PRICE PER EACH SIZE OF JOINT HARNESS IN PLACE. WORK SHALL INCLUDE INSTALLING MECHANICAL THRUST RESTRAINTS, GLANDS, GASKETS, BOLTS, ALL OTHER NECESSARY JOINTING MATERIAL IN PLACE AND ANY INCIDENTAL ITEMS REQUIRED TO COMPLETE THE WORK.	EACH	4		

ITEM NO. 663206
WATER SYSTEM LUMP SUM SCHEDULE, CONTINUED

ITEM	DESCRIPTION (CIP = COMPLETE IN PLACE)	UNIT	QUANTITY	UNIT PRICE	TOTAL
215	**8" JOINT HARNESS.** PAYMENT SHALL BE MADE AT THE UNIT PRICE PER EACH SIZE OF JOINT HARNESS IN PLACE. WORK SHALL INCLUDE INSTALLING MECHANICAL THRUST RESTRAINTS, GLANDS, GASKETS, BOLTS, ALL OTHER NECESSARY JOINTING MATERIAL IN PLACE AND ANY INCIDENTAL ITEMS REQUIRED TO COMPLETE THE WORK.	EACH	72		
225	**12" JOINT HARNESS.** PAYMENT SHALL BE MADE AT THE UNIT PRICE PER EACH SIZE OF JOINT HARNESS IN PLACE. WORK SHALL INCLUDE INSTALLING MECHANICAL THRUST RESTRAINTS, GLANDS, GASKETS, BOLTS, ALL OTHER NECESSARY JOINTING MATERIAL IN PLACE AND ANY INCIDENTAL ITEMS REQUIRED TO COMPLETE THE WORK.	EACH	22		
27X	**NON-PRESSURIZED CONNECTION, ALL SIZES.** NON-PRESSURIZED (WET) CONNECTION: PAYMENT FOR NON-PRESSURIZED (WET) CONNECTION SHALL BE MADE AT THE UNIT PRICE PER EACH NON-PRESSURIZED (WET) CONNECTION. WORK SHALL INCLUDE THE NON-PRESSURIZED (WET) CONNECTION TO EXISTING WATER LINES, INCLUDING EXCAVATING, BACKFILLING AND COMPACTING. THE UNIT PRICE SHALL INCLUDE PAYMENT FOR DISPOSING WASTE WATER, LOCATING THE MAIN TO BE TAPPED (LOCATION TO BE MADE IN AMPLE TIME AHEAD OF ACTUAL CONNECTION TO ALLOW FOR ANY NEEDED CHANGES), CUTTING INTO EXISTING LINES, AND NECESSARY PIPE REMOVAL, BLOCKING, BRACING, AND PRECAUTIONS SO THAT NO DAMAGE SHALL BE DONE TO THE WATER SYSTEM, EMPLOYEES, OR ANY OTHER PROPERTY OR PERSONS. THE NOTIFICATION OF WATER CUSTOMERS OF THE INTERRUPTION OF SERVICES, INCIDENTAL WELDING, IF NECESSARY, AND ANY OTHER CONSTRUCTION COSTS SHALL BE INCLUDED FOR PAYMENT IN THE UNIT BID PRICE OF A NON-PRESSURIZED CONNECTION. A NON-PRESSURIZED CONNECTION SHALL BE PAID FOR ONLY IF A VOLUME OF WATER GREATER THAN THE PIPE AREA TIMES 150 FEET IS TO BE DISPOSED DURING PRESSURE RELIEVING PROCEDURES. NO PAYMENT FOR A NON-PRESSURIZED CONNECTION SHALL BE MADE WHEN A CONNECTION IS MADE AT AN INTERSECTION WHERE THE WATER PRESSURE CAN BE RELIEVED ON ALL LINES COMING INTO THE INTERSECTION BY A VALVE OR VALVES IN INTERSECTION. THE SIZE USED FOR THE DETERMINATION OF THE FIXED UNIT PRICE WILL BE THE SIZE OF THE EXISTING PIPE TO BE CONNECTED TO AND NOT THE SIZE OF THE NEW LINE. A SMALL LEAK OF WATER FROM A STUB VALVE OR OTHER ITEM SHALL NOT CONSTITUTE BASIS FOR A NON-PRESSURIZED CONNECTION. PAYMENT FOR ONLY ONE NON-PRESSURIZED CONNECTION WILL BE MADE WHEN ONE DEWATERING OPERATION ENABLES MORE THAN ONE SYSTEM CONNECTION. CONTRACTOR AND INSPECTOR ARE TO SEE THAT AS MANY CONNECTIONS AS POSSIBLE ARE MADE WITH EACH DEWATERING PROCEDURE. NO SEPARATE PAYMENT WILL BE MADE FOR PROPER DISPOSAL OF SURPLUS EXCAVATIONS OR WASTE WATER. SURPLUS EXCAVATIONS AND WASTE WATER SHALL BE DISPOSED AS SOON AS POSSIBLE IN AN APPROVED PLACE TO MINIMIZE ANY DISTURBANCE OR INCONVENIENCE IN THE STREET OR ON THE ADJOINING PROPERTIES.	EACH	22		
32X	**6" CL. 250 GATE VALVE AND VALVE BOX.** PAYMENT FOR VALVES SHALL BE MADE AT THE UNIT PRICE PER EACH SIZE AND TYPE OF VALVE INSTALLED. WORK SHALL INCLUDE INSTALLING VALVE IN PLACE, POLYWRAP, VALVE STEM EXTENSIONS, INSTALLING CONCRETE COLLAR, BACKFILLING AND COMPACTING ANY INCIDENTAL ITEMS REQUIRED TO COMPLETE THE WORK IN STRICT ACCORDANCE WITH THE STANDARD DETAIL DRAWING.	EACH	16		
33X	**8" CL. 250 GATE VALVE AND VALVE BOX.** PAYMENT FOR VALVES SHALL BE MADE AT THE UNIT PRICE PER EACH SIZE AND TYPE OF VALVE INSTALLED. WORK SHALL INCLUDE INSTALLING VALVE IN PLACE, POLYWRAP, VALVE STEM EXTENSIONS, INSTALLING CONCRETE COLLAR, BACKFILLING AND COMPACTING ANY INCIDENTAL ITEMS REQUIRED TO COMPLETE THE WORK IN STRICT ACCORDANCE WITH THE STANDARD DETAIL DRAWING.	EACH	11		
34X	**12" CL. 250 GATE VALVE AND VALVE BOX.** PAYMENT FOR VALVES SHALL BE MADE AT THE UNIT PRICE PER EACH SIZE AND TYPE OF VALVE INSTALLED. WORK SHALL INCLUDE INSTALLING VALVE IN PLACE, VALVE STEM EXTENSIONS, INSTALLING CONCRETE COLLAR, BACKFILLING AND COMPACTING ANY INCIDENTAL ITEMS REQUIRED TO COMPLETE THE WORK IN STRICT ACCORDANCE WITH THE STANDARD DETAIL DRAWING.	EACH	5		

JAMES H. BUCKMAN NEW MEXICO 13062 REGISTERED PROFESSIONAL ENGINEER 10/7/15

NO.	DESCRIPTION	DATE	BY
3			
2			
1			

REVISIONS (OR CHANGE NOTICES)

CITY OF SANTA FE

CERRILLOS ROAD PHASE IIC
CAMINO CARLOS REY TO
LLANO STREET
SANTA FE COUNTY

WATER AND SEWER QUANTITITES

SCALE
NOT TO SCALE

DESIGNED BY: PB	DRAWN BY: PB	CHECKED BY: JB
DATE: 08/07/15	DATE: 08/07/15	DATE: 08/07/15

ITEM NO. 663206
WATER SYSTEM LUMP SUM SCHEDULE, CONTINUED

ITEM	DESCRIPTION (CIP = COMPLETE IN PLACE)	UNIT	QUANTITY	UNIT PRICE	TOTAL
345	**FIRE HYDRANT, 5' OR LESS BURY, CIP.** PAYMENT FOR FIRE HYDRANTS SHALL BE MADE AT THE UNIT PRICE PER EACH FIRE HYDRANT IN PLACE. WORK SHALL INCLUDE EXCAVATING TRENCH, INSTALLING FIRE HYDRANT, INSTALLING GRAVEL DRAIN, INSTALLING ALL JOINTING MATERIALS, JOINT RESTRAINTS, BACKFILLING AND COMPACTING, PAINTING AND NUMBERING AND ANY INCIDENTAL ITEMS REQUIRED TO COMPLETE THE WORK.	EACH	3		
350	**FIRE HYDRANT EXTENSION, 6" OR 12" LENGTH.** PAYMENT FOR A FIRE HYDRANT EXTENSION SHALL BE MADE AT THE UNIT PRICE PER EACH FIRE HYDRANT EXTENSION. WORK SHALL INCLUDE EXCAVATING TRENCH, EXTENDING FIRE HYDRANT, INSTALLING ALL JOINTING MATERIALS, BACKFILLING AND COMPACTING AND ANY INCIDENTAL ITEMS REQUIRED TO COMPLETE THE WORK.	EACH	1		
360	**FIRE HYDRANT, REMOVE AND RELAY.** PAYMENT FOR REMOVING AND RELAYING FIRE HYDRANT SHALL BE MADE AT THE UNIT PRICE PER EACH FIRE HYDRANT REMOVED AND RELAYED. WORK SHALL INCLUDE EXCAVATING TRENCH, REMOVING FIRE HYDRANT, INSTALLING FIRE HYDRANT, JOINT RESTRAINTS, INSTALLING GRAVEL DRAIN, BACKFILLING AND COMPACTING, PAINTING AND NUMBERING AND ANY INCIDENTAL ITEMS REQUIRED TO COMPLETE THE WORK.	EACH	4		
370	**2 1/4" FLUSH HYDRANT.** PAYMENT FOR 2¼-INCH FLUSH HYDRANT SHALL BE MADE AT THE UNIT PRICE PER EACH FLUSH HYDRANT IN PLACE. WORK SHALL INCLUDE EXCAVATING TRENCH, INSTALLING FLUSH HYDRANT, COPPER TUBING, SHUT OFF VALVE, INSTALLING GRAVEL DRAIN, INSTALLING ALL JOINTING MATERIALS, JOINT RESTRAINTS, BACKFILLING AND COMPACTING AND ANY INCIDENTAL ITEMS REQUIRED TO COMPLETE THE WORK.	EACH	1		
410	**VALVE BOX REPLACEMENT.** PAYMENT FOR VALVE BOX REPLACEMENT SHALL BE MADE AT THE UNIT PRICE PER EACH VALVE BOX REPLACED. WORK SHALL INCLUDE EXCAVATING TRENCH, REMOVING AND DISPOSING OF EXISTING VALVE BOX, INSTALLING NEW VALVE BOX, INSTALLING VALVE STEM EXTENSION, BACKFILLING AND COMPACTING, INSTALLING CONCRETE COLLAR AND ANY INCIDENTAL ITEMS REQUIRED TO COMPLETE THE WORK.	EACH	12		
420	**VALVE BOX ADJUSTMENT.** PAYMENT FOR VALVE BOX ADJUSTMENT SHALL BE MADE AT THE UNIT PRICE PER EACH VALVE BOX ADJUSTED TO GRADE. WORK SHALL INCLUDE EXCAVATING TRENCH, RAISING OR LOWERING THE VALVE BOX TO GRADE, RAISING OR LOWERING VALVE STEM EXTENSION TO GRADE, BACKFILLING AND COMPACTING, INSTALLING CONCRETE COLLAR, CLEANING MATERIAL FROM INSIDE THE VALVE BOX TO ENSURE OPERATING UNIT IS CLEAR AND ANY INCIDENTAL ITEMS REQUIRED TO COMPLETE THE WORK.	EACH	2		
460	**BOLLARDS (PAIR):** PAYMENT FOR BOLLARDS SHALL BE MADE AT THE UNIT PRICE PER EACH PAIR OF BOLLARDS IN PLACE. WORK SHALL INCLUDE INSTALLING BOLLARDS IN PLACE WITH CONCRETE FOOTING ENCASEMENT AND FILLING, CAPPING, PAINTING AND ANY INCIDENTAL ITEMS REQUIRED TO COMPLETE THE WORK.	EACH	1		
4XX.1	**PRV STATION, CIP.** PAYMENT FOR THE PRV STATION SHALL INCLUDE ALL MATERIALS AND WORK REQUIRED TO REMOVE AND REPLACE THE EXISTING PRV STATION NO. 5, COMPLETE, AND SHALL INCLUDE EXCAVATIONS WITH SLOPE PROTECTION, CONCRETE FOUNDATION SLAB, FURNISHING AND INSTALLING MANUFACTURED METERED PRESSURE REDUCING STATION, MAKING ALL PIPING, POWER, AND TELEMETRY CONNECTIONS, BACKFILLING WITH COMPACTION, BOLLARDS, SITE GRADING, STATION COMMISSIONING, FACTORY TRAINING AND O&M MANUALS AND OTHER INCIDENTAL WORK TO PROVIDE A FULLY FUNCTIONING AND OPERATING PRESSURE REDUCING STATION.	LUMP SUM	1		
4XX.2	**PRV CONDUIT AND WIRING, CIP.** PAYMENT SHALL INCLUDE ALL MATERIALS AND WORK REQUIRED TO FURNISH AND INSTALL POWER AND TELEMETRY CONDUITS AND WIRING BETWEEN THE EXISTING ABOVE GRADE ELECTRIC PEDESTAL AND RTU UNIT AND THE PRESSURE REDUCING STATION POWER AND TELEMETRY PANEL CONNECTIONS AS SHOWN ON THE PROJECT PLANS, COMPLETE.	LUMP SUM	1		
67X.1	**SERVICE REPLACEMENT, 5/8" OR 3/4".** PAYMENT FOR SERVICE REPLACEMENT SHALL BE MADE AT THE UNIT PRICE PER EACH SERVICE REPLACED PER THE STANDARD DETAILS. WORK SHALL INCLUDE EXCAVATING TRENCH, INSTALLING CORPORATION AND TAPPING INTO EXISTING PRESSURIZED WATER MAIN OR NEW REPLACEMENT MAIN, INSTALLING SERVICE LINE FITTINGS, INSTALLING ANGLE VALVE AND ELLS, INSTALLING METER YOKE(S) OR SETTER, INSTALLING METER CAN WITH LID AND COVER, CLOSING OLD CORPORATION, REMOVING OLD METER CAN AND SETTING, CONNECTING TO EXISTING CUSTOMER YARD LINE WITH COUPLING/ADAPTER, BACKFILLING AND COMPACTING, TESTING SOIL DENSITY, FLUSHING NEW SERVICE, HYDROSTATIC TESTING, DISINFECTING NEW SERVICE, COPPER SERVICE PIPING AND TAPPING SADDLE, AND ANY INCIDENTAL ITEMS REQUIRED TO COMPLETE THE WORK.	EACH	8		
67X.2	**SERVICE REPLACEMENT, 1".** PAYMENT FOR SERVICE REPLACEMENT SHALL BE MADE AT THE UNIT PRICE PER EACH SERVICE REPLACED PER THE STANDARD DETAILS. WORK SHALL INCLUDE EXCAVATING TRENCH, INSTALLING CORPORATION AND TAPPING INTO EXISTING PRESSURIZED WATER MAIN OR NEW REPLACEMENT MAIN, INSTALLING SERVICE LINE FITTINGS, INSTALLING ANGLE VALVE AND ELLS, INSTALLING METER YOKE(S) OR SETTER, INSTALLING METER CAN WITH LID AND COVER, CLOSING OLD CORPORATION, REMOVING OLD METER CAN AND SETTING, CONNECTING TO EXISTING CUSTOMER YARD LINE WITH COUPLING/ADAPTER, BACKFILLING AND COMPACTING, TESTING SOIL DENSITY, FLUSHING NEW SERVICE, HYDROSTATIC TESTING, DISINFECTING NEW SERVICE, COPPER SERVICE PIPING AND TAPPING SADDLE, AND ANY INCIDENTAL ITEMS REQUIRED TO COMPLETE THE WORK.	EACH	2		
68X.1	**SERVICE REPLACEMENT, 1 1/2".** PAYMENT FOR SERVICE REPLACEMENT SHALL BE MADE AT THE UNIT PRICE PER EACH SERVICE REPLACED PER THE STANDARD DETAILS. WORK SHALL INCLUDE EXCAVATING TRENCH, INSTALLING CORPORATION AND TAPPING INTO EXISTING PRESSURIZED WATER MAIN OR NEW REPLACEMENT MAIN, INSTALLING SERVICE LINE FITTINGS, INSTALLING ANGLE VALVE AND ELLS, INSTALLING METER YOKE(S) OR SETTER, INSTALLING METER CAN WITH LID AND COVER, CLOSING OLD CORPORATION, REMOVING OLD METER CAN AND SETTING, CONNECTING TO EXISTING CUSTOMER YARD LINE WITH COUPLING/ADAPTER, BACKFILLING AND COMPACTING, TESTING SOIL DENSITY, FLUSHING NEW SERVICE, HYDROSTATIC TESTING, DISINFECTING NEW SERVICE, COPPER SERVICE PIPING AND TAPPING SADDLE, AND ANY INCIDENTAL ITEMS REQUIRED TO COMPLETE THE WORK.	EACH	1		

PARSONS BRINCKERHOFF

CITY OF SANTA FE	SHEET
NEW MEXICO PROJECT NO.	NO.
CN S100130	11–6

ITEM NO. 663206
WATER SYSTEM LUMP SUM SCHEDULE, CONTINUED

ITEM	DESCRIPTION (CIP = COMPLETE IN PLACE)	UNIT	QUANTITY	UNIT PRICE	TOTAL
68X.2	**SERVICE REPLACEMENT, 2".** PAYMENT FOR SERVICE REPLACEMENT SHALL BE MADE AT THE UNIT PRICE PER EACH SERVICE REPLACED PER THE STANDARD DETAILS. WORK SHALL INCLUDE EXCAVATING TRENCH, INSTALLING CORPORATION AND TAPPING INTO EXISTING PRESSURIZED WATER MAIN OR NEW REPLACEMENT MAIN, INSTALLING SERVICE LINE FITTINGS, INSTALLING ANGLE VALVE AND ELLS, INSTALLING METER YOKE(S) OR SETTER, INSTALLING METER CAN WITH LID AND COVER, CLOSING OLD CORPORATION, REMOVING OLD METER CAN AND SETTING, CONNECTING TO EXISTING CUSTOMER YARD LINE WITH COUPLING/ADAPTER, BACKFILLING AND COMPACTING, TESTING SOIL DENSITY, FLUSHING NEW SERVICE, HYDROSTATIC TESTING, DISINFECTING NEW SERVICE, COPPER SERVICE PIPING AND TAPPING SADDLE, AND ANY INCIDENTAL ITEMS REQUIRED TO COMPLETE THE WORK.	EACH	1		
6XX	**CUSTOMER OWNED PRV, CIP.** PAYMENT FOR A NEW CUSTOMER OWNED PRV SHALL BE MADE AT THE UNIT PRICE PER EACH PRV INSTALLED PER THE STANDARD DETAILS, ANY SIZE. WORK SHALL INCLUDE EXCAVATING TRENCH, INSTALLING SERVICE LINE FITTINGS, INSTALLING ANGLE VALVES AND ELLS, INSTALLING METER CAN WITH LID AND COVER, COPPER SERVICE PIPING, PRV, BACKFILLING AND COMPACTING, TESTING SOIL DENSITY, FLUSHING NEW SERVICE, HYDROSTATIC TESTING, DISINFECTING NEW SERVICE AND INCIDENTAL ITEMS REQUIRED TO COMPLETE THE WORK.	EACH	3		
70X.1	**METER BOX RELOCATION/REPLACEMENT, 1 1/2".** PAYMENT FOR METER BOX RELOCATION/REPLACEMENT SHALL BE MADE AT THE UNIT PRICE PER HORIZONTAL RELOCATION/REPLACEMENT AND/OR VERTICAL ADJUSTMENT OF EACH METER BOX PER THE STANDARD DETAILS. WORK SHALL INCLUDE EXCAVATING TRENCH, RELOCATING/REPLACING METER CAN WITH LID AND COVER, RELOCATING ANGLE VALVE AND ELLS, METER YOKE(S) OR SETTER, RELOCATING SERVICE LINE FITTINGS, CONNECTING TO EXISTING CUSTOMER YARD LINE, TRANSFERRING EXISTING METER, RETURNING ALL SALVAGEABLE MATERIALS TO SDCW YARD, ADJUSTING METER BOX TO GRADE, BACKFILLING AND COMPACTING, TESTING SOIL DENSITY, FLUSHING SERVICE, HYDROSTATIC TESTING, DISINFECTING SERVICE, COPPER SERVICE PIPING AND TAPPING SADDLE AND ANY INCIDENTAL ITEMS REQUIRED TO COMPLETE THE WORK.	EACH	1		
70X.2	**METER BOX RELOCATION/REPLACEMENT, 2".** PAYMENT FOR METER BOX RELOCATION/REPLACEMENT SHALL BE MADE AT THE UNIT PRICE PER HORIZONTAL RELOCATION/REPLACEMENT AND/OR VERTICAL ADJUSTMENT OF EACH METER BOX PER THE STANDARD DETAILS. WORK SHALL INCLUDE EXCAVATING TRENCH, RELOCATING/REPLACING METER CAN WITH LID AND COVER, RELOCATING ANGLE VALVE AND ELLS, METER YOKE(S) OR SETTER, RELOCATING SERVICE LINE FITTINGS, CONNECTING TO EXISTING CUSTOMER YARD LINE, TRANSFERRING EXISTING METER, RETURNING ALL SALVAGEABLE MATERIALS TO SDCW YARD, ADJUSTING METER BOX TO GRADE, BACKFILLING AND COMPACTING, TESTING SOIL DENSITY, FLUSHING SERVICE, HYDROSTATIC TESTING, DISINFECTING SERVICE, COPPER SERVICE PIPING AND TAPPING SADDLE AND ANY INCIDENTAL ITEMS REQUIRED TO COMPLETE THE WORK.	EACH	1		

NOTE TO CONTRACTOR: THE CONTRACTOR SHALL PROVIDE AN ITEMIZED COST BREAKDOWN FOR EACH OF THE ITEMS LISTED AND SHALL SUBMIT THESE COSTS TO THE PROJECT MANAGER AT THE PRE-CONSTRUCTION MEETING.

JAMES H. BUCKMAN NEW MEXICO 13062 REGISTERED PROFESSIONAL ENGINEER 1/7/16

NO.	DESCRIPTION	DATE	BY
3			
2			
1			

REVISIONS (OR CHANGE NOTICES)

CITY OF SANTA FE

CERRILLOS ROAD PHASE IIC
CAMINO CARLOS REY TO
LLANO STREET
SANTA FE COUNTY

WATER AND SEWER QUANTITITES

SCALE
NOT TO SCALE

DESIGNED BY: PB	DRAWN BY: PB	CHECKED BY: JB
DATE: 08/07/15	DATE: 08/07/15	DATE: 08/07/15

PARSONS BRINCKERHOFF

CITY OF SANTA FE	SHEET
NEW MEXICO PROJECT NO.	NO.
CN S100130	11-7

WATER LINE QUANTITIES

DESCRIPTION/STATION	ITEM NO. 70 4" DI WATER MAIN LIN. FT.	85 6" DI WATER MAIN LIN. FT.	95 8" DI WATER MAIN LIN. FT.	115 12" DI WATER MAIN LIN. FT.	160 FITTING INSTALLATION LB.	170 4" RETAINER RING/BOLT ON FLANGE EA	175 6" RETAINER RING/BOLT ON FLANGE EA	180 8" RETAINER RING/BOLT ON FLANGE EA	190 12" RETAINER RING/BOLT ON FLANGE EA	205 4" JOINT HARNESS EA	210 6" JOINT HARNESS EA	215 8" JOINT HARNESS EA	225 12" JOINT HARNESS EA	27X NON-PRESSURIZED CONNECTION, ALL SIZES EACH	32X 6" CL. 250 GATE VALVE AND VALVE BOX EACH	33X 8" CL. 250 GATE VALVE AND VALVE BOX EACH	34X 12" CL. 250 GATE VALVE AND VALVE BOX EACH
CERRILLOS ROAD																	
141+11.54, 41.55' RT. TO 142+37.00, 36.06' RT.				170	1530			3	8			1	2	1			2
142+37.00, 36.06' RT. TO 142+33.96, 53.21' LT.			90		345			6				7				1	
142+33.96, 53.21' LT. TO 146+88.93, 52.00' LT.			470		470		1	7				8				2	
146+88.93, 52.00' LT. TO 147+22.46, 151.19' LT. (MACLOVIA ST.)		120			395		1	5						1			
146+88.93, 52.00' LT. TO 149+74.48, 52.00' LT.					425		4	4				4			1		
149+74.48, 52.00' LT.TO 150+07.05, 150.65' LT. (LUANA ST.)		120			150		4							1	1		
149+74.48, 52.00' LT. TO 152+50.23, 52.00' LT.			280		295			5				3					
150+13.49, 1.65' RT.					90				1								
152+50.23, 52.00' LT. TO 152+85.92, 152.10' LT. (DECLOVINA ST.)			120		480		2	7				2		1		1	
152+50.23, 52.00' LT. TO 155+42.20, 54.00' LT.			300		310		2	6	1			2				2	
155+42.20, 54.00' LT. TO 155+59.05, 141.96' LT. (LUJAN ST.)		110			150		4								1		
155+42.20, 54.00' LT. TO 158+18.42, 54.00' LT.			280		645		4	8				6					
158+18.42, 54.00' LT. TO 158+40.05, 142.97' LT. (VITALIA ST.)		110			150		4							1	1		
158+18.42, 54.00' LT. TO 161+02.95, 54.00' LT.			290		295			5				3				1	
161+02.95, 54.00' LT. TO 161+23.91, 142.89' LT. (APACHE AVE.)			110		180	1		5						1		1	
161+02.95, 54.00' LT. TO 168+36.00, 39.00' LT.			730		470		1	9				11				1	
162+68.32, 49.91' RT.							2				4						
166+65, 170' RT.				10	145									1			
168+36.00, 39.00' LT. TO 168+63.00, 11.50' RT.			90		1350			7	8			4	8				1
168+63.00, 11.50' RT. TO 171+11.28, 11.50' RT.				250	475		5		2				2				
171+11.28, 11.50' RT. (LLANO STREET)		50												1	1		
171+11.28, 11.50' RT. TO 171+86.90, 11.50' RT.				80	725			6	3			1	2			1	1
171+86.90, 11.50' RT. TO 172+00.86, 52.72' LT. (CHAMA AVE.)			80		340		1	5				5					
171+86.90, 11.50' RT. TO 172+10, 20.84' RT.			40											1			
OSAGE AVE.																	
7+30.00, 16.77' LT. TO 9+56.81, 12.05 LT.			230		220			6				6		1	1		
ST. MICHAELS DR.																	
10+06.61, 58.20' LT. TO 12+31.82, 51.11' LT.				230	575			1	4				4			1	
12+31.82, 51.11' LT. TO 12+31.82, 76.72' RT.				130	555				3				4	1			1
12+31.82, 51.11' LT. TO 12+68.50, 49.83' LT.				40	325		5	2				2					
12+68.50, 49.83' LT. (CHAMISA ST.)		60												1	1		
12+68.50, 49.83' LT. TO 15+23.28, 53.35' LT.			260		335	5	2	2				2			1		
15+23.28, 53.35' LT. (PINON ST.)	30	30												1	1		
15+23.28, 53.35' LT. TO 15+38.70, 67.61' LT.		30			220		1	3				5					
TOTAL	**30**	**630**	**3370**	**910**	**11645**	**6**	**43**	**102**	**30**	**0**	**4**	**72**	**22**	**13**	**9**	**11**	**5**
USE	**40**	**700**	**3400**	**1000**	**12000**	**6**	**43**	**102**	**30**	**2**	**4**	**72**	**22**	**20**	**9**	**11**	**5**

JAMES H. BUCKMAN NEW MEXICO 13062 REGISTERED PROFESSIONAL ENGINEER 10/5/15

NO.	DESCRIPTION	DATE	BY
3			
2			
1			

REVISIONS (OR CHANGE NOTICES)

CITY OF SANTA FE

CERRILLOS ROAD PHASE IIC
CAMINO CARLOS REY TO
LLANO STREET
SANTA FE COUNTY

WATER AND SEWER QUANTITITES

SCALE

DESIGNED BY: PB	DRAWN BY: PB	CHECKED BY: JB
DATE: 08/07/15	DATE: 08/07/15	DATE: 08/07/15

PARSONS BRINCKERHOFF

CITY OF SANTA FE	SHEET
NEW MEXICO PROJECT NO.	NO.
CN S100130	11-8

FIRE HYDRANTS

STATION	OFFSET (EXISTING)		FIRE HYDRANT #	ITEM NO. 7X 4" DI WATER MAIN, CIP. (LF)	ITEM NO.8X 6" D.I. WATER MAIN, CIP. (LF)	ITEM NO. 27X NON-PRESSURIZED CONNECTION, ALL SIZES (EA)	ITEM NO. 32X 6" CL. 250 GATE VALVE AND VALVE BOX (EA)	ITEM NO. 345 FIRE HYDRANT, 5' OR LESS BURY, CIP (EA)	ITEM NO. 350 FIRE HYDRANT EXT. 6" OR 12" LENGTH (LF)	ITEM NO. 360 FIRE HYDRANT, REMOVE AND RELAY (EA)	ITEM NO. 370 2 1/4" FLUSH HYDRANT (EA)	ITEM NO. 460 BOLLARDS (PAIR)	COMMENTS
CERRILLOS RD.													
141+13.43	83.23	RT.	269						1				
141+27.85	62.49	LT.		33		1					1		NEW HYDRANT
145+05.70	55.94	LT.	2213		4		1			1			
147+10.98	77.28	LT.	262		24		1						
152+83.84	115.51	LT.	1960				1			1			
157+80.48	57.88	LT.	263		10		1			1			
162+68.32	49.91	RT.	943		18	1				1			
163+53.00	61.50	LT.			3		1	1					NEW HYDRANT
172+00.86	52.72'	LT.			13		1	1					NEW HYDRANT
ST. MICHAELS DR.													
15+38.70	67.61'	LT.			13		1	1				1	NEW HYDRANT
			SUBTOTAL =	**33**	**85**	**2**	**7**	**3**	**1**	**4**	**1**	**1**	
			USE =	**40**	**90**	**2**	**7**	**3**	**1**	**4**	**1**	**1**	

WATER METERS

STATION	OFFSET		ITEM NO. 67X.1 SERVICE REPLACEMENT, 5/8" OR 3/4"	ITEM NO. 67X.2 SERVICE REPLACEMENT, 1"	ITEM NO. 68X.1 SERVICE REPLACEMENT, 1 1/2"	ITEM NO. 67X.2 SERVICE REPLACEMENT, 2"	ITEM NO. 6XX CUSTOMER OWNED PRV	ITEM NO. 70X.1 METER BOX RELOCATION/ REPLACEMENT, 1 1/2"	ITEM NO. 70X.2 METER BOX RELOCATION/ REPLACEMENT, 2"	COMMENTS
CERRILLOS RD.										
142+33.01	62.49	LT.	1				1			TRANSFER SERVICE TO NEW MAIN
143+50.16	63.71	LT.	1				1			TRANSFER SERVICE TO NEW MAIN
144+87.42	77.70	LT.		1						TRANSFER SERVICE TO NEW MAIN
145+70.73	73.05	LT.	1							TRANSFER SERVICE TO NEW MAIN
148+27.39	62.99	LT.		1						TRANSFER SERVICE TO NEW MAIN
148+47.51	45.12	RT.							1	SIZE UNKNOWN
149+91.88	55.71	LT.	1							TRANSFER SERVICE TO NEW MAIN
150+13.49	1.65	RT.								REMOVE & DISPOSE OF EXIST. SERVICE
151+45.42	61.28	LT.			1		1			TRANSFER SERVICE TO NEW MAIN
162+30.51	64.63	RT.						1		SIZE UNKNOWN
163+65.76	56.00	LT.	1							TRANSFER SERVICE TO NEW MAIN
165+61.62	62.85	LT.	1							TRANSFER SERVICE TO NEW MAIN
165+76.93	61.44	LT.				1				TRANSFER SERVICE TO NEW MAIN
169+69.60	37.90	RT.	1							RETIRE MAIN AND TRANSFER SERVICE
170+79.79	38.82	LT.	1							TRANSFER SERVICE TO NEW MAIN
		TOTAL =	**8**	**2**	**1**	**1**	**3**	**1**	**1**	

WATER VALVES

STATION	OFFSET		ITEM NO. 410 VALVE BOX REPLACEMENT	ITEM NO. 420 VALVE BOX ADJUSTMENT	COMMENTS
CERRILLOS RD.					
141+06.94	52.37	RT.		1	
141+07.00	80.01	RT.		1	F.H. VALVE
145+36.87	32.43	RT.	1		
148+47.39	42.36	RT.	1		METER VALVE
148+86.67	44.90	RT.	1		
152+07.17	42.79	RT.	1		
156+83.65	45.01	RT.	7		
TO					
157+09.56	45.01	RT.			METER VALVES
162+68.25	47.08	RT.	1		F.H. VALVE
		TOTAL =	**12**	**2**	

ITEM NO. 663207
SEWER SYSTEM LUMP SUM SCHEDULE

ITEM	DESCRIPTION (CIP = COMPLETE IN PLACE)	UNIT	QUANTITY	UNIT PRICE	TOTAL
662002	MANHOLE TYPE "C" - 4' DIA 6'-10' DEEP	EACH	2		
662400	MANHOLE ADJUSTMENT	EACH	12		
662500	MANHOLE FRAME AND COVER, VENTED	EACH	12		
663XX1	PIPE BURSTING, 10" DIAMETER, CIP.	LIN. FT.	920		
663XX2	SANITARY SEWER SERVICE RECONNECTIONS, ANY DEPTH	EACH	4		

NOTE TO CONTRACTOR: THE CONTRACTOR SHALL PROVIDE AN ITEMIZED COST BREAKDOWN FOR EACH OF THE ITEMS LISTED AND SHALL SUBMIT THESE COSTS TO THE PROJECT MANAGER AT THE PRE-CONSTRUCTION MEETING.

SANITARY SEWER MANHOLES

SEWER MANHOLE LABEL	CL STATION	CL OFFSET	EX. RIM ELEV.	FINISH GRADE ELEV.	ELEVATION DIFFERENCE	MANHOLE MATERIAL
C1/6B	141+08.25	21.15	6750.51	6750.58	0.07	CONC. BLOCK
C1/6	142+07.61	13.22	6752.09	6752.2	0.11	CONC. BLOCK
C1/7A	144+26.39	8.05	6755.75	6755.53	-0.22	CONC. BLOCK
C1/7B	148+91.20	9.05	6762.64	6762.06	-0.58	CONC. BLOCK
C1/7	152+06.02	8.57	6766.27	6765.84	-0.43	PRECAST CONC.
C1/8A	158+30.34	7.84	6776.23	6776.28	0.05	CONC. BLOCK
B3/6	160+79.34	-1.87	6780.65	6781.06	0.41	CONC. BLOCK
C1/8A	162+04.42	8.62	6783.33	6782.91	-0.42	CONC. BLOCK
B3/7	164+86.89	-4.2	6788.92	6788.92	0	CONC. BLOCK
B3/8	168+02.43	-0.67	6794.46	6794.65	0.19	CONC. BLOCK
C1/9	171+21.27	21.69	6800.36	6800.26	-0.1	UNKNOWN
B3/9	171+27.95	0.26	6800.78	6800.89	0.11	CONC. BLOCK

\+ = RAISE MH
\- = LOWER MH

JAMES H. BUCKMAN NEW MEXICO 13062 REGISTERED PROFESSIONAL ENGINEER 10/7/15

NO.	DESCRIPTION	DATE	BY
3			
2			
1			

REVISIONS (OR CHANGE NOTICES)

CITY OF SANTA FE

CERRILLOS ROAD PHASE IIC
CAMINO CARLOS REY TO
LLANO STREET
SANTA FE COUNTY

WATER AND SEWER QUANTITITES

SCALE

DESIGNED BY: PB	DRAWN BY: PB	CHECKED BY: JB
DATE: 08/07/15	DATE: 08/07/15	DATE: 08/07/15

J:\33693 Cerrillos Ph IIC\04 Engineering-33693\Plans\11_Sheets\08 WaterSSA Quantities and Misc Utility Relocations.dwg Oct 07, 2015 - 10:39am Saved By: buckman

N.M. PROJECT NO. CN S100130 SHEET NO. 11-8

PARSONS BRINCKERHOFF

CITY OF SANTA FE	SHEET
NEW MEXICO PROJECT NO.	NO.
CN S100130	11-9

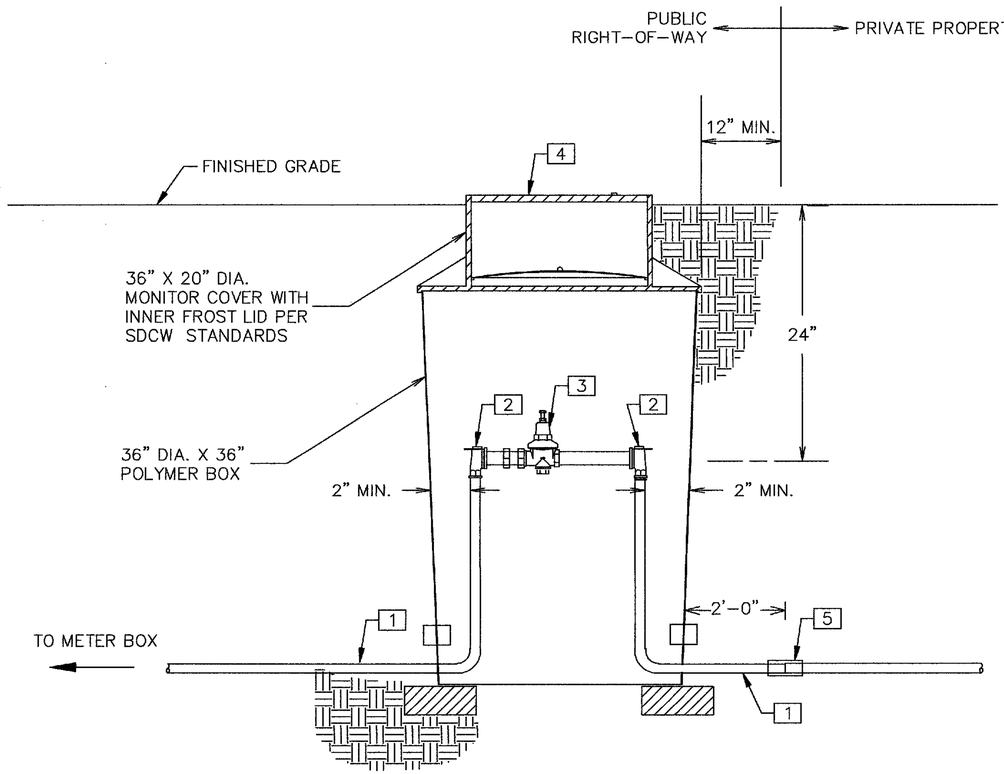

CUSTOMER OWNED PRV

KEYED NOTES

1. TYPE K COPPER TUBING MATCHING SERVICE SIZE
2. BALL VALVE (BRASS)
3. PRV WITH COPPER OR BRASS PIPE, FITTINGS AND UNION
4. BOX AND COVER WITH INNER FROST LID PER SDCW 2" SINGLE SERVICE
5. CONNECTER AS REQUIRED TO CONNECT TO CUSTOMER YARD LINE

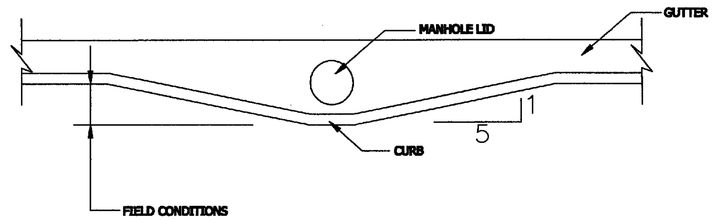

CURB & MANHOLE CONFLICT DETAIL

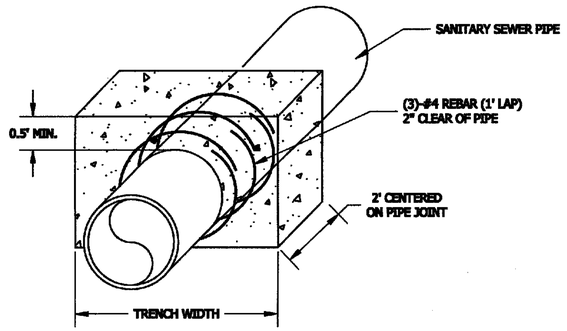

CONCRETE COLLAR DETAIL
USE AT ALL CONNECTIONS OF NEW SANITARY SEWER PIPE TO EXISTING

JAMES H. BUCKMAN NEW MEXICO 13062 10/1/15 REGISTERED PROFESSIONAL ENGINEER

NO.	DESCRIPTION	DATE	BY
3			
2			
1			

REVISIONS (OR CHANGE NOTICES)

CITY OF SANTA FE

CERRILLOS ROAD PHASE IIC
CAMINO CARLOS REY TO
LLANO STREET
SANTA FE COUNTY

WATER AND SANITARY SEWER
MISCELLANEOUS DETAILS

SCALE
NO SCALE

DESIGNED BY: PB	DRAWN BY: PB	CHECKED BY: JB
DATE: 08/07/15	DATE: 08/07/15	DATE: 08/07/15

J:\33693 Cerrillos Ph IIC\04 Engineering-33693\Plans\11_Sheets\09 Water and Sewer Details - Customer Owned PRV.dwg Oct 07, 2015 - 10:40am Saved By: buckman

N.M. PROJECT NO. CN S100130 SHEET NO. 11-9

PARSONS BRINCKERHOFF

CITY OF SANTA FE	SHEET
NEW MEXICO PROJECT NO.	NO.
CN S100130	11–10

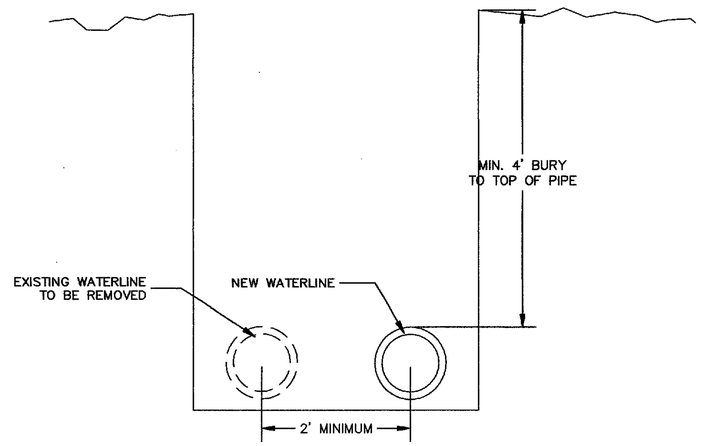

TYPICAL TRENCH/PLACEMENT DETAIL

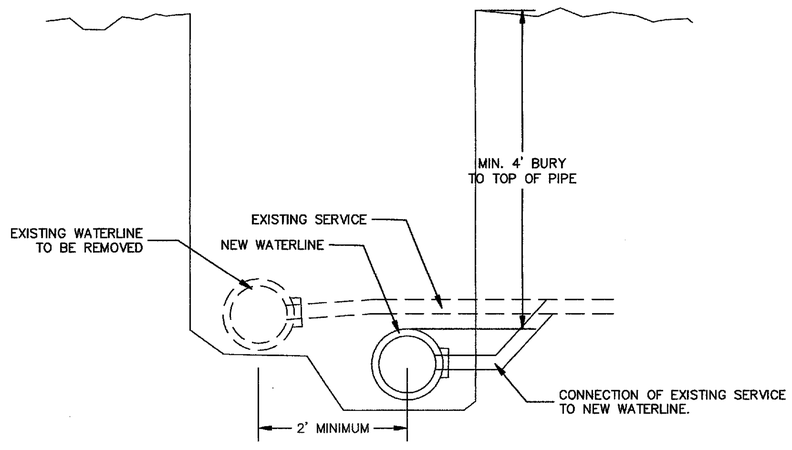

WATERLINE TRENCH/PLACEMENT DETAIL AT EXISTING SERVICE CONNECTIONS

WHERE EXISTING SERVICES PREVENT ADJACENT PLACEMENT OF NEW WATERLINE. INSTALL NEW WATERLINE BELOW EXISTING AS SHOWN.

JAMES H. BUCKMAN NEW MEXICO 13062 REGISTERED PROFESSIONAL ENGINEER 10/7/15

NO.	DESCRIPTION	DATE	BY
3			
2			
1			

REVISIONS (OR CHANGE NOTICES)

CITY OF SANTA FE

CERRILLOS ROAD PHASE IIC
CAMINO CARLOS REY TO
LLANO STREET
SANTA FE COUNTY

WATER AND SEWER DETAILS

SCALE
NOT TO SCALE

DESIGNED BY: PB	DRAWN BY: PB	CHECKED BY: JB
DATE: 08/07/15	DATE: 08/07/15	DATE: 08/07/15

J:\33693 Cerrillos Ph IIC\04 Engineering-33693\Plans\11_Sheets\10 Water and Sewer Details.dwg Oct 07, 2015 – 10:44am Saved By: buckman

N.M. PROJECT NO. CN S100130 SHEET NO. 11–10

PIPE DISPLACEMENT (BURSTING - 10" PIPE DIAMETER) GENERAL NOTES

ALL PERTINENT PROVISIONS OF THE NEW MEXICO DEPARTMENT OF TRANSPORTATION'S STANDARD SPECIFICATIONS SHALL APPLY IN ADDITION TO THE FOLLOWING:

WORK ASSOCIATED WITH PIPE BURSTING SERVICES SHALL INCLUDE ANY OTHER INCIDENTAL ITEMS INCLUDING MOBILIZATION, DEMOBILIZATION, ALL MATERIALS, LABOR, EQUIPMENT, COST OF INSERTION, JACKING OR RECOVERY PITS, MACHINE PITS, BY-PASS PUMPING, PRE AND POST VIDEO INSPECTION, TESTING, AND INCIDENTALS REQUIRED TO COMPLETE THE REPLACEMENT PROCESS. ANY PIPE DAMAGE INCURRED TO EXISTING SEWERS BY THE CONTRACTOR NOT ASSOCIATED WITH PIPE BURSTING SHALL BE REPLACED WITH NEW PIPE AT THE CONTRACTOR'S EXPENSE. THE CONTRACTOR SHALL BE REQUIRED TO SUBMIT POST VIDEO LOGS AND VIDEO TO THE CITY OF SANTA FE WASTEWATER DIVISION FOR REVIEW AND APPROVAL.

PART 1 - GENERAL

1.01 DESCRIPTION
THIS SECTION ADDRESSES THE PROCEDURES TO BE EMPLOYED FOR REPLACING THE EXISTING SEWER PIPES WITH NEW POLYETHYLENE PIPE. IN GENERAL, ANY APPURTENANT WORK NOT SPECIFICALLY DESIGNATED HEREIN SHALL CONFORM TO 2006 NEW MEXICO STANDARD SPECIFICATIONS FOR PUBLIC WORKS CONSTRUCTION (APWA).

1.02 QUALIFICATIONS
A. THE CONTRACTOR/SUBCONTRACTOR SHALL BE TRAINED BY THE MANUFACTURER OF THE PIPE BURSTING EQUIPMENT IN THE USE OF THE PIPE BURSTING EQUIPMENT. THE CONTRACTOR MAY BE REQUIRED TO PROVIDE CERTIFICATION FROM THE MANUFACTURER THAT THE CONTRACTOR HAS BEEN TRAINED AND IS PROFICIENT IN THE USE OF THE EQUIPMENT. ONLY THE CONTRACTOR'S EMPLOYEES TRAINED AND CERTIFIED BY THE MANUFACTURER SHALL BE ALLOWED TO OPERATE THE EQUIPMENT DURING THE PROJECT.
B. THE CONTRACTOR/SUBCONTRACTOR SHALL BE TRAINED BY THE MANUFACTURER OF THE POLYETHYLENE PIPE BUTT-FUSION EQUIPMENT IN THE USE OF THE FUSION EQUIPMENT. THE CONTRACTOR MAY BE REQUIRED TO PROVIDE CERTIFICATION FROM THE MANUFACTURER THAT THE CONTRACTOR HAS BEEN TRAINED AND IS PROFICIENT IN THE USE OF THE EQUIPMENT. ONLY THE CONTRACTOR'S EMPLOYEES TRAINED AND CERTIFIED BY THE MANUFACTURER SHALL BE ALLOWED TO OPERATE THE EQUIPMENT DURING THE PROJECT.

1.03 SUBMITTALS
A. SUBMIT MANUFACTURER'S SPECIFIC TECHNICAL DATA WITH COMPLETE INFORMATION ON PHYSICAL PROPERTIES OF PIPE AND PIPE DIMENSIONS PERTINENT TO THIS JOB. A CERTIFICATE OF "COMPLIANCE WITH SPECIFICATION" SHALL BE FURNISHED FOR ALL MATERIALS TO BE SUPPLIED.
B. COMPLETE CALCULATIONS INCLUDING LISTS OF PARAMETERS, ALL FORMULAS, AND ALL OTHER DATA WHICH ARE NECESSARY FOR THE DESIGN OF THE NEW PIPE AND THE AXIAL RESISTANCE FOR THE DESIGN OF THE MANHOLE ANCHORAGE SYSTEM INCLUDING THE REQUIRED NUMBER OF ELECTOFUSED RESTRAINT SADDLES.
C. DETAIL DRAWINGS AND WRITTEN DESCRIPTIONS OF THE ENTIRE CONSTRUCTION PROCEDURE TO INSTALL PIPE, BY-PASS SEWAGE FLOW AND SEWER SERVICE RECONNECTIONS.
D. CERTIFICATION OF WORKERS' PROFICIENCY FOR THE PIPE FUSION FOR POLYETHYLENE PIPE AND PIPE BURSTING EQUIPMENT AND PROCEDURES FOR BOTH TYPES OF PIPE.
E. SDR RATING CALCULATION FOR THE NEW POLYETHYLENE PIPE TO BE INSTALLED.

PIPE DIMENSION RATIOS: THE MINIMUM WALL THICKNESS OF THE POLYETHYLENE PIPE WILL MEET THE FOLLOWING, AS BASED ON THE DEEPEST PORTION OF A PARTICULAR PIPE PULL, TYPICALLY BETWEEN MANHOLES:

DEPTH OF COVER (FEET)	MINIMUM SDR OF PIPE
0 - 11	17
>11	11

1.04 LICENSE AGREEMENTS
WHEN REQUESTED BY THE CITY, THE CONTRACTOR SHALL SUBMIT EVIDENCE ACCEPTABLE TO THE CITY, SUCH AS A CERTIFIED COPY OF A LICENSE OR AGREEMENT THAT IT HAS THE AUTHORITY FROM THE PATENT OWNER TO USE AND/OR INSTALL PATENTED EQUIPMENT AND MATERIALS. THE CONTRACTOR AGREES TO DEFEND, INDEMNIFY, AND HOLD HARMLESS THE CITY AND THE PROJECT MANAGER OR ENGINEER AGAINST ALL CLAIMS, SUITS, AND ACTIONS BROUGHT BECAUSE OF ANY PERSON OR PROPERTY ARISING OUT OF PATENT INFRINGEMENT BY THE CONTRACTOR OR THE CONTRACTOR'S EMPLOYEES, AGENTS, SUPPLIERS, OR ANY TIER OF SUBCONTRACTOR INVOLVED IN THE WORK.

1.05 MEASUREMENT AND PAYMENT
A. PAYMENT FOR THE WORK IN THIS SECTION WILL BE INCLUDED IN ITEM NO. 663207, SEWER SYSTEM, LUMP SUM.
B. THE CONTRACT BID PRICE SHALL BE FULL COMPENSATION FOR ALL MOBILIZATION, DEMOBILIZATION, MATERIALS, LABOR, EQUIPMENT, COST OF INSERTION JACKING OR RECOVERY PITS, MACHINE PITS, SURFACE RESTORATION AT THE PITS, BY-PASS PUMPING, CONNECTION OF NEW PIPE TO EXISTING OR NEW MANHOLES INCLUDING WORK TO MANHOLE INVERTS AND SHELFS, PRE AND POST VIDEO INSPECTION, TESTING, AND INCIDENTALS REQUIRED TO COMPLETE THE REPLACEMENT PROCESS. CONNECTION OF NEW SEWER LINE TO EXISTING OR NEW MANHOLES IS CONSIDERED INCIDENTAL AS SUCH NO SEPARATE PAYMENT WILL BE MADE.
C. THE COST FOR TRAFFIC CONTROL SHALL BE PAID IN ACCORDANCE WITH THE BID ITEMS ESTABLISHED IN THE BID PROPOSAL.

PART 2 - MATERIALS

2.01 POLYETHYLENE PIPE (HDPE)
A. MATERIAL
1) THE PIPE MATERIAL SHALL BE MANUFACTURED FROM A HIGH DENSITY HIGH MOLECULAR WEIGHT POLYETHYLENE COMPOUND WHICH CONFORMS TO ASTM F-714, AND ASTM D-1248 AND MEETS THE REQUIREMENTS FOR TYPE III, CLASS C, GRADE P-34, CATEGORY 5, AND HAS A PPI RATING OF PE 3408. INSIDE COLOR SHALL BE WHITE OR AN ALTERNATIVE LIGHT COLOR SUITABLE FOR ILLUMINATION DURING TELEVISION INSPECTION. OUTSIDE COLOR MAY BE DIFFERENT PROVIDED THE PIPE IS A HOMOGENEOUS MATERIAL AND ALL COLORS ARE INTEGRAL TO THE HDPE MATERIAL (NOT PAINTED OR COATED). CONTRACTOR SHALL FOLLOW THE WRITTEN RECOMMENDATIONS OF THE PIPE MANUFACTURER REGARDING INSTALLATION AND STORAGE, INCLUDING PROTECTING THE PIPE FROM DAMAGE FROM ULTRA-VIOLET LIGHT. AS A MINIMUM, PIPE SHALL BE COMPLETELY COVERED IN ITS STORED LOCATION UNTIL READY FOR SPLICING AND INSTALLATION.

2) THE PIPE PRODUCED FROM THIS RESIN SHALL HAVE A MINIMUM CELL CLASSIFICATION OF 345434C UNDER ASTM D3350. THE PROJECT MANAGER OR ENGINEER AT NO EXTRA COST TO THE CITY MAY ALSO ACCEPT A HIGHER NUMBERED CELL CLASSIFICATION LIMIT THAT GIVES A DESIRABLE HIGHER PRIMARY PROPERTY, PER ASTM D3350. THE VALUE FOR THE HYDROSTATIC DESIGN BASIS SHALL NOT BE LESS THAN 1600 PSI (11.03 MPA) PER ASTM D-2837.

B. DIMENSIONS
1) DIMENSIONS AND WORKMANSHIP SHALL BE IN ACCORDANCE WITH ASTM F714 AND ASTM D2122
2) THE MINIMUM INTERNAL DIAMETER OF THE NEW SEWER PIPE SHALL BE AS APPROVED BY THE PROJECT MANAGER. THE CONTRACTOR SHALL SUBMIT THE MANUFACTURES SPECIFICATIONS FOR APPROVAL BY THE PROJECT MANAGER PRIOR TO INSTALLATION
3) THE PHYSICAL APPEARANCE OF DEFORMITIES SUCH AS CONCENTRATED RIDGES, DISCOLORATION, EXCESSIVE SPOT ROUGHNESS, PITTING, VARYING WALL THICKNESS, ETC. SHALL CONSTITUTE SUFFICIENT BASIS FOR REJECTION. THE PIPE SHALL BE HOMOGENEOUS THROUGHOUT, FREE FROM VISIBLE CRACKS, FOREIGN INCLUSIONS, AND ANY OTHER DEFECTS. PIPE WITH GASHES, NICKS, ABRASIONS, OR ANY SUCH PHYSICAL DAMAGE THAT MAY HAVE OCCURRED DURING STORAGE AND/OR HANDLING, WHICH ARE LARGER/DEEPER THAN 10% OF THE WALL THICKNESS SHALL NOT BE USED AND MUST BE REMOVED FROM THE CONSTRUCTION SITE.

C. PIPE JOINTING
1) SECTIONS OF POLYETHYLENE PIPE SHALL BE ASSEMBLED AND JOINED ON THE JOB SITE ABOVE GROUND. JOINTING SHALL BE ACCOMPLISHED BY THE HEATING AND BUTT-FUSION METHOD IN STRICT CONFORMANCE WITH THE MANUFACTURER'S PRINTED INSTRUCTIONS.
2) THE BUTT-FUSION METHOD FOR PIPE JOINTING SHALL BE CARRIED OUT IN THE FIELD BY OPERATORS WITH PRIOR EXPERIENCE IN FUSING POLYETHYLENE PIPE WITH SIMILAR EQUIPMENT USING PROPER JIGS AND TOOLS PER STANDARD PROCEDURES OUTLINED BY THE PIPE MANUFACTURER. THESE JOINTS SHALL HAVE A SMOOTH, UNIFORM, DOUBLE ROLLED-BACK BEAD MADE WHILE APPLYING THE PROPER MELT, PRESSURE, AND ALIGNMENT. IT SHALL BE THE SOLE RESPONSIBILITY OF THE CONTRACTOR TO PROVIDE AN ACCEPTABLE BUTT-FUSION JOINT. TERMINAL SECTIONS OF PIPE THAT ARE JOINED WITHIN THE INSERTION PIT SHALL BE CONNECTED WITH A FULL CIRCLE PIPE REPAIR CLAMP. THE BUTT GAP BETWEEN PIPE ENDS SHALL NOT EXCEED ONE-HALF (1/2) INCH. ALL JOINTS SHALL BE INSPECTED BY THE PROJECT MANAGER OR ENGINEER BEFORE INSERTION OR COVERING.

3) ALL NEW POLYETHYLENE PIPES SHALL BE LAID ALONG STREETS, NOT ACROSS STREETS, SO AS NOT TO BLOCK TRAFFIC. IF THE PIPE LAID ALONG ONE STREET WOULD BLOCK TRAFFIC ON A CROSS STREET, THEN CONTRACTOR SHALL LAY THE PIPE AROUND CORNERS OR PROVIDE A RAMP/BRIDGE TO ALLOW TRAFFIC TO SAFELY CROSS THE PIPE WITH NO DAMAGE TO THE PIPE. PRIVATE PROPERTY, INCLUDING LANDSCAPING, SHALL BE PROTECTED DURING PIPE BURSTING OPERATIONS INCLUDING THE PREPARATION AND LAYOUT OF THE PIPE.

D. MANHOLE ANCHORAGE
1) EACH END OF THE HDPE PIPE AT THE CONNECTION WITH A MANHOLE WILL BE ANCHORED WITH AN ELECTROFUSION RESTRAINT SADDLE. A MINIMUM OF TWO (2) SADDLES WILL BE REQUIRED ON EACH END TO PREVENT THE MOVEMENT OF THE HDPE PIPE DUE TO CREEP CAUSED BY THERMAL VARIATIONS.
2) ELECTROFUSION RESTRAINT SADDLES SHALL BE AS MANUFACTURED BY CENTRAL PLASTICS, OR APPROVED EQUAL.

3.03 PIPE INSTALLATION
A. IF DETERMINED BY THE CONTRACTOR THAT PIPE BURSTING IS NOT AN APPROPRIATE REHABILITATION METHOD FOR A SPECIFIC REACH OF PIPE DUE TO THE POSSIBILITY OF DAMAGE TO THE ADJACENT STRUCTURES, PAVEMENT, AND/OR UNDERGROUND UTILITIES, THE CONTRACTOR SHALL SUGGEST ANOTHER TRENCHLESS PIPE REHABILITATION METHOD AND OBTAIN APPROVAL OF THAT METHOD FROM THE CITY.
B. THE PIPE BURSTING TOOL SHALL BE DESIGNED AND MANUFACTURED TO FORCE ITS WAY THROUGH EXISTING PIPE MATERIALS BY FRAGMENTING THE PIPE AND COMPRESSING THE OLD PIPE SECTION INTO THE SURROUNDING SOILS AS IT PROGRESSES. THE BURSTING UNIT SHALL GENERATE SUFFICIENT FORCE TO BURST AND COMPACT THE EXISTING PIPELINE.
C. EQUIPMENT USED TO PERFORM THE WORK SHALL BE LOCATED AWAY FROM BUILDINGS SO AS NOT TO CREATE NOISE OR VIBRATION IMPACT. PROVIDE A SILENT ENGINE COMPARTMENT WITH THE WINCH TO REDUCE MACHINE NOISE AS REQUIRED MEETING LOCAL REQUIREMENTS.
D. THE CONTRACTOR SHALL INSTALL ALL PULLEYS, ROLLERS, BUMPERS, ALIGNMENT CONTROL DEVICES AND OTHER EQUIPMENT REQUIRED TO PROTECT EXISTING MANHOLES, AND TO PROTECT THE PIPE FROM DAMAGE DURING INSTALLATION. LUBRICATION MAY BE USED AS RECOMMENDED BY THE MANUFACTURER. UNDER NO CIRCUMSTANCES WILL THE PIPE BE STRESSED BEYOND ITS ELASTIC LIMIT.
E. THE INSTALLED PIPE SHALL BE ALLOWED THE MANUFACTURER'S RECOMMENDED AMOUNT OF TIME, BUT NOT LESS THAN FOUR (4) HOURS, FOR COOLING AND RELAXATION DUE TO TENSILE STRESSING PRIOR TO ANY RECONNECTION OF SERVICE LINES, SEALING OF THE ANNULUS OR BACKFILLING OF THE INSERTION PIT. SUFFICIENT EXCESS LENGTH OF NEW PIPE, BUT NOT LESS THAN FOUR (4) INCHES, SHALL BE ALLOWED TO PROTRUDE INTO THE MANHOLE TO PROVIDE FOR CONTRACTION. THE INVERT OF THE MANHOLE SHALL BE GROUTED SMOOTH TO PROVIDE A SMOOTH SURFACE BETWEEN INLET AND OUTLET.
F. FOLLOWING THE RELAXATION PERIOD, THE VOID BETWEEN NEW PIPE AND MANHOLE WALL SHALL BE SEALED. SEALING SHALL BE MADE WITH MATERIAL APPROVED BY THE PROJECT MANAGER AND/OR REPRESENTATIVE AND SHALL EXTEND A MINIMUM OF EIGHT (8) INCHES INTO AND BEYOND THE MANHOLE WALL IN SUCH A MANNER AS TO FORM A SMOOTH, UNIFORM, WATERTIGHT JOINT.
G. THE NEW PIPE SHALL BE BOTH PRE AND POST TV'D WITH A CAMERA WITH PAN AND TILT CAPABILITIES. POST TV INSPECTION SHALL INCLUDE VIDEO INSPECTION OF THE NEW SERVICE CONNECTIONS. POST TV INSPECTION SHALL BE PERFORMED AFTER THE NEW LINE HAS BEEN FLUSHED. THE CONTRACTOR SHALL PROVIDE VIDEO LOGS AND VIDEO FOR REVIEW BY THE CITY OF SANTA FE WASTEWATER DIVISION. ANY BELLIES IN THE PIPE RETAINING MORE THAN 1 INCH OF WATER MAY REQUIRE CORRECTION AS DETERMINED BY THE PROJECT MANAGER AT THE CONTRACTOR'S EXPENSE.
H. THE NEW PIPE SHALL BE PRESSURE TESTED AT 5 PSI FOR 5 MINUTES AFTER INSTALLATION AND PRIOR TO THE CONNECTION OF THE SEWER SERVICE LINES

MATERIALS
PATCHING/SEALING MIX– FOR PATCHING GREATER THAN 3 INCHES THICK, 4000 PSI CONCRETE SHALL BE USED. STRONG-SEAL QSR OR EQUIVALENT AS APPROVED BY THE PROJECT MANAGER AND IN THE APPROVED PRODUCT LIST SHALL BE USED AS A PATCHING MIX UP TO 3 INCHES THICK, SHALL BE APPLIED ACCORDING TO MANUFACTURER'S RECOMMENDATIONS AND SHALL HAVE THE FOLLOWING MINIMUM REQUIREMENTS:

A. COMPREHENSIVE STRENGTH (ASTM C-109)	15 MIN. 200 PSI 0.6 HRS. 1400 PSI
B. SHRINKAGE (ASTM C-596)	0% AT 90% R.H.
C. BOND (ASTM C-321)	28 DAYS, 145 PSI
D. CEMENT	CALCIUM ALUMINATE
E. DENSITY, WHEN APPLIED	105 PLUS OR MINUS PCF

SEWER SERVICE RECONNECTION AS PART OF A PIPE BURSTING PROJECT:
ALL WASTEWATER SERVICE CONNECTIONS SHALL BE IDENTIFIED, LOCATED AND EXCAVATED PRIOR TO THE PIPE INSERTION TO EXPEDITE RECONNECTION. UPON COMMENCEMENT, PIPE INSERTION SHALL BE CONTINUOUS AND WITHOUT INTERRUPTION FROM ONE MANHOLE TO ANOTHER, EXCEPT AS APPROVED BY THE OWNER. UPON COMPLETION OF INSERTION OF THE NEW PIPE, THE CONTRACTOR SHALL EXPEDITE THE RECONNECTION OF SERVICES TO MINIMIZE ANY INCONVENIENCE TO THE CUSTOMERS. SEWER SERVICES TO INCLUDE REMOVAL AND REPLACEMENT OF THE EXISTING SERVICE LINE, NEW SADDLE AND INSTALLATION OF UP TO 5 (FIVE) FEET MINIMUM OF 4 (FOUR) INCH OR 6 (SIX) INCH DIAMETER PVC SERVICE LINE REPLACEMENT. THE SEWER SERVICE RECONNECTION SHALL BE INCLUDED IN THE COST OF ITEM NO. 663207, SEWER SYSTEM. THE PRICE SHALL INCLUDE ALL ITEMS ASSOCIATED WITH THE MAKING OF A SERVICE CONNECTION TO NEW SEWER LINES, INCLUDING MOBILIZATION, EXCAVATION, BACKFILL AND COMPACTION, ROMAC SADDLES AND STRAPS OR INSERTA TEE SERVICE CONNECTIONS AND/OR AS APPROVED BY THE PROJECT MANAGER, INSTALLATION OF UP TO 5 (FIVE) FEET MINIMUM OF 4 (FOUR) INCH OR 6 (SIX) INCH DIAMETER PVC SERVICE LINE, COUPLINGS AND/OR NON-SHEAR COUPLINGS. THE PRICE SHALL INCLUDE PAYMENT FOR THE DISPOSAL OF WASTEWATER, LOCATION OF UTILITIES, CUTTING INTO EXISTING LINES OR NEW LINES, AND ANY NECESSARY REMOVAL AND REINSTALLATION OF EXISTING SEWER SERVICE PIPE TO MAKE THE SERVICE CONNECTION. THE NOTIFICATION OF CUSTOMERS OF THE INTERRUPTION OF SERVICES, AND ANY OTHER CONSTRUCTION COSTS SHALL BE INCLUDED FOR PAYMENT IN THE BID PRICE. WHEN SUCH SERVICE CONNECTIONS AND THEIR EXCAVATIONS ARE MADE, CONTRACTOR SHALL PROVIDE ALL NECESSARY PRECAUTIONS SO THAT NO DAMAGE SHALL BE DONE TO THE SEWER SYSTEM, EMPLOYEES, OR ANY OTHER PROPERTY OR PERSONS. NO SEPARATE PAYMENT WILL BE MADE FOR THE PROPER DISPOSING OF SURPLUS EXCAVATIONS OR THE DISPOSING OF WASTEWATER, SO THAT NO INCONVENIENCE WILL BE CAUSED IN THE STREET OR THE ADJOINING PROPERTIES. THE COST THEREOF SHALL BE INCLUDED IN THE PRICE. SURPLUS EXCAVATIONS SHALL BE DISPOSED OF AS SOON AS POSSIBLE IN AN APPROVED PLACE.

PARSONS BRINCKERHOFF

CITY OF SANTA FE	SHEET
NEW MEXICO PROJECT NO.	NO.
CN S100130	11–11

JAMES H. BUCKMAN NEW MEXICO 13062 10/15/15 REGISTERED PROFESSIONAL ENGINEER

NO.	DESCRIPTION	DATE	BY
3			
2			
1			

REVISIONS (OR CHANGE NOTICES)

CITY OF SANTA FE

CERRILLOS ROAD PHASE IIC
CAMINO CARLOS REY TO
LLANO STREET
SANTA FE COUNTY

WATER AND SEWER DETAILS

SCALE
NOT TO SCALE

DESIGNED BY: PB	DRAWN BY: PB	CHECKED BY: JB
DATE: 08/07/15	DATE: 08/07/15	DATE: 08/07/15

PARSONS BRINCKERHOFF

CITY OF SANTA FE	SHEET
NEW MEXICO PROJECT NO.	NO.
CN S100130	11–12

+00 | 135+00 | 140+00

JORGENSEN LANE 8+39.39

HARRISON ROAD

CAMINO CARLOS REY

SIERA ROAD

MH C1/5 | MH C1/6A | MH C1/6B | MH C1/6

6" C.I. | 8" P.V.C. | 12" C.I. | 10" CONC. | 2" G.I. | 8" DIP | 10" STL. VHP | 8" STL. VHP

PRESSURE ZONE ⑥ | PRESSURE ZONE ⑤

PROPOSED STORM DRAIN

PRV

MATCHLINE STA. 144+00.00

STA. 141+27.85, 62.49' LT. INSTALL: (1) FLUSH HYD. W/ RESTRAINTS 33 L.F. OF 4" PIPE FLANGE EL=6751.00

STA. 142+33.01, 62.49' LT. TRANSFER ¾" SVC. & ADJUST METER CAN TO GRADE W/ ¾" CUSTOMER OWNED PRV.

STA. 142+33.96, 53.21' LT. INSTALL: (1)–8"X90° BEND (1) 8" VALVE (2) 8"X45° VERT. BENDS W/ RESTRAINTS. SEE SHT. 11–16 FOR CROSSING PROFILE.

STA. 143+50.16, 63.71' LT. TRANSFER SVC. & ADJUST METER CAN TO GRADE W/ ¾" CUSTOMER OWNED PRV.

RETIRE EX. WL

STA. 141+13.43, 83.23' RT. ADJUST EXISTING HYDRANT TO GRADE

STA. 141+11.54, 41.55' RT. INSTALL: (1) 12"X45° BEND W/ RESTRAINTS.

STA. 141+67.39' RT. REMOVE EXISTING PRV AND RETIRE MAIN.

STA. 141+60.50, 79.00' RT. INSTALL: (1)–PRV STATION NO. 5. SEE SHEET 11–20 FOR DETAILS. (2) 12"X45° BENDS (2) 12" VALVES (2) 12"X8" REDUCERS W/ RESTRAINTS

STA. 141+85.25, 79.32' RT. & STA. 142+25.06, 35.45' RT. INSTALL: (1)–12" 45° BEND W/ RESTRAINTS

STA. 142+37.00, 36.06' RT. INSTALL: (1) 12"X8" TEE (1) 8" VALVE W/ RESTRAINTS CONNECT TO EXIST. WL SEE SHT. 11–16 FOR CROSSING PROFILE.

SCALE
HORIZ. 1"=50'
VERT. 1"=5'

DESIGNED BY: PB	DRAWN BY: PB	CHECKED BY: JB
DATE: 08/07/15	DATE: 08/07/15	DATE: 08/07/15

NOTE: WHERE NEW WATERLINES ARE INSTALLED, ALL SERVICES AND TRUNK LINES SHALL BE RECONNECTED.

EXISTING GROUND ℄ CERRILLOS RD.

PROFILE GRADE ℄ CERRILLOS RD.

SEWER MH C1/5
STA. 132+63.99, 24.52' RT
RIM= 6739.56'
INVERT IN ELEV= 6723.56'
INVERT OUT ELEV= 6723.56'

SEWER MH C1/6A
STA. 135+37.01, 29.62' RT
RIM= 6742.33'
INVERT IN ELEV= 6730.73'
INVERT OUT ELEV= 6730.73'

STA. 136+90.69, 29.48' RT.
RIM. ELEV.=6744.36'
TYPE "C" MANHOLE

SEWER MH C1/6B
STA. 141+07.81, 20.53' RT
RIM= 6750.51'
INVERT IN ELEV= 6740.96'
INVERT OUT ELEV= 6740.96'

SEWER MH C1/6
STA. 142+07.40, 13.24' RT
RIM= 6752.08'
INVERT IN ELEV= 6742.91'
INVERT OUT ELEV= 6742.91'

273.16 L.F. 0.64% 10 in. Concrete

568.94 L.F. 2.63% 10 in. Concrete

100.22 L.F. 1.80% 10 in. Concrete

219.77 L.F. 1.95% 10 in. Concrete

8" W L.T. 1.52% 10 in. Concrete

6760 | 6755 | 6750 | 6745 | 6740 | 6735 | 6730 | 6725 | 6720

6737.09 | 6737.72 | 6738.62 | 6738.73 | 6739.21 | 6739.53 | 6740.10 | 6740.71 | 6740.96 | 6741.67 | 6742.25 | 6742.76 | 6743.29 | 6744.07 | 6744.61 | 6745.44 | 6746.28 | 6746.92 | 6747.99 | 6748.39 | 6749.28 | 6750.55 | 6751.28 | 6751.48 | 6752.01 | 6752.95 | 6753.52 | 6754.32 | 6755.30

130+00 | 131+00 | 132+00 | 133+00 | 134+00 | 135+00 | 136+00 | 137+00 | 138+00 | 139+00 | 140+00 | 141+00 | 142+00 | 143+00 | 144+00

JAMES H. BUCKNAM
NEW MEXICO
13062
REGISTERED PROFESSIONAL ENGINEER
10/5/15

CERRILLOS ROAD
WATER AND SEWER
PLAN AND PROFILE

CITY OF SANTA FE	SHEET
NEW MEXICO PROJECT NO.	NO.
CN S100130	11-13

PARSONS BRINCKERHOFF

STA. 144+87.42, 77.70' LT. RELOCATE METER BOX AND TRANSFER 1" SERVICE

STA. 145+11.00, 61.34' LT. REMOVE & RELAY EXISTING F.H. INSTALL: (4.0)-LF. OF 6" PIPE (1) 8"X6" MJ X FLG. TEE (1) 6" VALVE W/ BOX W/ RESTRAINTS NEW FLANGE ELEV=6756.57'

STA. 145+70.13, 73.05 LT. RELOCATE METER BOX AND TRANSFER SVC.

STA. 146+88.93, 52.00' LT. INSTALL: (1)-8"X8" MJ X FLG TEE (2)-8" VALVES (2) VALVE BOXES (1)-8"X11.25° BEND W/ RESTRAINTS

STA. 147+22.46, 151.19 LT. CONNECT TO EXIST. 6" WL W/ 8"X6" REDUCER, (2) 8"X45° BENDS W/ RESTRAINTS

STA. 147+10.98, 77.28' LT. REMOVE & RELAY EXISTING F.H. #262 INSTALL: (1)-8"X6" TEE (1)-6" GATE VALVE (1)-VALVE BOX 24 LF. 6" PIPE NEW FLANGE ELEV=6760.08

STA. 148+01.50, 61.00' LT. RELOCATE METER BOX & TRANSFER 1" SERVICE.

STA. 149+74.48, 52.00' LT. INSTALL: (1)-8"X6" MJ X FLG. TEE (1) 6" VALVE (1) VALVE BOX (1)-6"X11.25° BEND W/ RESTRAINTS

STA. 149+91.88, 55.71' LT. RELOCATE METER BOX & TRANSFER ⅝" SERVICE

STA. 150+07.05, 150.65 LT. CONNECT TO EXIST. 6" WL W/ (2) 6"X45° BENDS W/ RESTRAINTS

STA. 151+45.42, 61.28' LT. RELOCATE EXISTING 1½" METER W/ CUSTOMER OWNED PRV & TRANSFER SERVICE

STA. 152+50.23, 52.00' LT. INSTALL: (1)-8"X8" MJ X FLG. TEE (1) 8" VALVE W/ BOX (1)-8"X11.25° BEND W/ RESTRAINTS

STA. 152+83.84, 115.51' LT. REMOVE & RELAY EXISTING F.H. #1960 INSTALL: (1) 8"X6" TEE (1)-6" VALVE W/ BOX W/RESTRAINTS FLANGE ELEV=6767.08

STA. 152+85.92, 152.10 LT. CONNECT TO EXIST. 6" WL W/ 8"X6" REDUCER, (2) 6"X45° BENDS W/ RESTRAINTS

STA. 154+60.99, 10.54' LT. REMOVE EXISTING SERVICE AND CAP AT 12" MAIN

STA. 154+89.86, 49.97' LT. INSTALL 8"X45° HOR. BEND

STA. 154+93.89, 54.00' LT. INSTALL 8"X45° HOR. BEND

STA. 155+42.20, 54.00' LT. INSTALL (1)-8"X6" MJ X FLG. TEE, (2) 8" VALVES W/BOXES, (1)-6" VALVE W/ BOX, (1)-6"X11.25° BEND W/ RESTRAINTS

STA. 155+59.05, 141.96 LT. CONNECT TO EXIST. 6" WL W/ (2) 45° BENDS W/ RESTRAINTS

STA. 157+80.48, 57.88' LT. REMOVE & RELAY EXISTING F.H. #263 INSTALL: (1) 8"X6" TEE (1)-6" VALVE W/ BOX W/ RESTRAINTS FLANGE ELEV=6774.95

MATCHLINE STA. 144+00.00

MATCHLINE STA. 158+00.00

145+00 150+00 155+00

MACLOVIA STREET LUANA STREET DECLOVINA

8" DIP 10" STL. VHP 10" CONC. 8" STL. VHP 12" C.I. 8" C.I. 6" C.I. 8" P.V.C.

MH C1/7A C1/7B MH C1/7

PROPOSED STORM DRAIN

NEW SAS MANHOLE

STA. 145+36.87, 32.43' RT. REPLACE EXISTING VALVE BOX

STA. 147+31.30, 39.24' RT. CUT AND CAP EXISTING 8" WL CROSSING AT 12" WL

STA. 148+47.39, 42.36' RT. REPLACE EXISTING VALVE BOX

STA. 148+47.51, 45.12' RT. RELOCATE METER BOX & ADJUST SERVICE

STA. 148+86.67, 44.90' RT. REPLACE EXISTING VALVE BOX

STA. 150+13.49, 1.65' RT. REMOVE EXISTING SERVICE AND CAP AT 12" MAIN

STA. 152+07.17, 42.79' RT. REPLACE EXISTING VALVE BOX

STA. 154+44.59, 8.29' RT. BUILD 4' DIA. SAS MH TYPE "C" ON EXISTING SAS

STA. 156+83.65, 45.01' RT. TO STA. 157+09.56, 45.90' RT. ADJUST (7) VALVE BOXES TO GRADE

SCALE
HORIZ. 1"=50'
VERT. 1"=5'

DESIGNED BY: PB	DRAWN BY: PB	CHECKED BY: JB
DATE: 08/07/15	DATE: 08/07/15	DATE: 08/07/15

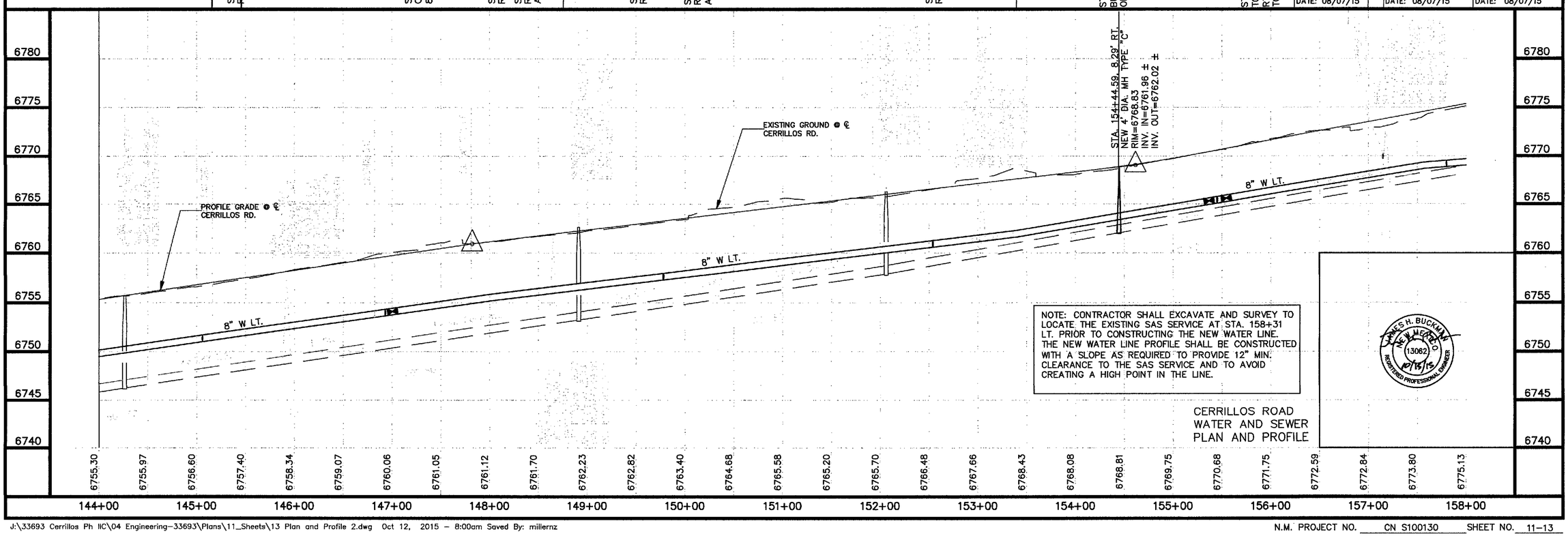

NOTE: CONTRACTOR SHALL EXCAVATE AND SURVEY TO LOCATE THE EXISTING SAS SERVICE AT STA. 158+31 LT. PRIOR TO CONSTRUCTING THE NEW WATER LINE. THE NEW WATER LINE PROFILE SHALL BE CONSTRUCTED WITH A SLOPE AS REQUIRED TO PROVIDE 12" MIN. CLEARANCE TO THE SAS SERVICE AND TO AVOID CREATING A HIGH POINT IN THE LINE.

JAMES H. BUCKMAN NEW MEXICO 13082 10/15/15 REGISTERED PROFESSIONAL ENGINEER

CERRILLOS ROAD WATER AND SEWER PLAN AND PROFILE

J:\33693 Cerrillos Ph IIC\04 Engineering-33693\Plans\11_Sheets\13 Plan and Profile 2.dwg Oct 12, 2015 - 8:00am Saved By: millernz

N.M. PROJECT NO. CN S100130 SHEET NO. 11-13

CITY OF SANTA FE	SHEET
NEW MEXICO PROJECT NO.	NO.
CN S100130	11–14

PARSONS BRINCKERHOFF

MATCHLINE STA. 158+00.00

STA. 158+18.42, 54.00' LT. INSTALL: (1)–8"X6" MJ X FLG. TEE (1)–6" VALVE W/ BOX (1)–6"X11.25° BEND (2) 8"X45° VERT. BENDS W/ RESTRAINTS

STA. 158+40.05, 142.97' LT. CONNECT TO EXIST. 6" WL W/ (2) 45° BENDS W/ RESTRAINTS

STA. 160+27, 56.00' LT. ± INSTALL: 1" METER FOR IRRIGATION. SEE SECTION 12 FOR DETAILS.

STA. 161+02.95, 54.00' LT. INSTALL: (1)–8"X8" MJ X FLG. TEE (1)–8"X11.25° BEND (2)–8" VALVE W/BOX W/ RESTRAINTS

STA. 161+23.91, 142.89' LT. CONNECT TO EXIST. 4" WL W/ 8" X 4" REDUCER AND (2) 8" X 45° BENDS W/ RESTRAINTS

STA. 163+65.76, 56.00' LT. RELOCATE METER CAN AND TRANSFER ⅝" SERVICE

STA. 163+58.00, 61.50' LT. INSTALL: (1) 8" X 6" MJ X FLG. TEE (1) GATE VALVE W/ BOX (1) F.H. # 3 L.F. OF 6" PIPE FLANGE ELEV.=6885.71

STA. 165+61.62, 62.85' LT. RELOCATE METER BOX & TRANSFER ¾" SERVICE

STA. 165+76.93, 61.44' LT. RELOCATE METER BOX & TRANSFER 2" SERVICE

STA. 166+10.00, 39.59' LT. DEFLECT WL

STA. 167+68.00, 36.87' LT. INSTALL: (1)–8" VALVE W/ BOX & RESTRAINTS

STA. 168+36.00, 39.00' LT. INSTALL: (1)–8"X8" MJ X FLG. TEE (1)–8"X11.25° BEND W/ RESTRAINTS

STA. 168+63.00, 37.00' LT. INSTALL: (1) 8"X90° HOR. BEND (2) 8"X45° VERT. BENDS W/ RESTRAINTS

STA. 170+79.79, 38.82' LT. RELOCATE METER BOX & TRANSFER ⅝" SERVICE

STA. 172+00.86, 52.72' LT. INSTALL: (1)–F.H. # (1) 8"X6" TEE (1) 8"X11.25° BEND (1) 6" VALVE W/BOX 13 L.F. OF 6" WL (1) 8" CAP W/ RESTRAINTS FLANGE ELEV.=6802.35

160+00 | 165+00 | 170+00

VITALIA STREET | APACHE AVENUE | OSAGE AVENUE | CHAMA AVENUE

PROPOSED STORM DRAIN

MH B3/6 | MH B3/7 | MH B3/8 | MH B3/9 | MH C1/8A | MH C1/8 | MH C1/9

STA. 166+06.00, 50.00' LT. DEFLECT WL

NEW SAS MANHOLE

STA. 172+10, 20.84 RT. CONNECT TO EXIST. 8" WL

ST. MICHAELS DRIVE

RETIRE WATERLINES

LLANO STREET

STA. 161+45.01, 5.32' RT. REMOVE EXISTING SERVICE AND CAP AT 12" MAIN

STA. 162+04.50, 8.72' RT. TO 171+21.19, 22.79' RT. REPLACE EXISTING 10" SAS BY PIPE BURSTING AND RECONNECT EXISTING SERVICES. BYPASS PUMP TO 15" SAS DURING PIPE REPLACEMENT.

STA. 162+30.51, 64.63' RT. ADJUST METER CAN TO GRADE

STA. 162+68.32, 49.91' RT. REMOVE & RELAY EXISTING F.H. INSTALL: (1)–6" GATE VALVE (4)–VALVE BOX (18.0)–L.F. OF 6" PIPE NEW FLANGE ELEV=6783.97'

NOTE: MANHOLE AT STA. 167+07.80, 20.63' RT. IS PROPOSED TO BE CONSTRUCTED USING NIGHT CLOSURE(S). USE A PRECAST BASE OR OTHER METHODS TO MEET THE SCHEDULE REQUIREMENTS. SEE SECTION 6 FOR TRAFFIC CONTROL PLANS.

STA. 167+07.80, 20.63' RT. INSTALL: TYPE "C" MANHOLE CONNECT TO EXISTING SAS.

STA. 167+85.13, 65.69' RT. ABANDON EXISTING VALVE

STA. 167+85.73, 67.34' RT. ABANDON EXISTING VALVE

STA. 166+65, 170' RT. CUT OUT 12"X6" TEE INSTALL 12" PIPE W/ SLEEVE

STA. 167+94.59, 60.89' RT. ABANDON EXISTING VALVE

STA. 168+39.26, 20.02' RT. ABANDON EXISTING VALVE

STA. 168+63.00, 11.50 RT. INSTALL: (1)–12"X12" MJ X FLG. TEE (1) 12"X8" REDUCER (1) 12" GATE VALVE W/ BOX (2) 12"X45° VERT. BENDS W/ RESTRAINTS

STA. 169+69.60, 37.90' RT. RELOCATE METER BOX AND TRANSFER ⅝" SERVICE

STA. 171+11.28, 11.50' RT. INSTALL: (1) 12"X6" MJ X FLG TEE (1) 6" VALVE & BOX 50 L.F. OF 6" WL CONNECT TO EXIST. WL W/ (2) 6"X45° BENDS W/ RESTRAINTS

STA. 171+86.90, 11.50' RT. INSTALL: (1) 12"X8" MJ X FLG. TEE (1) 12" GATE VALVE W/ BOX (2) 8" GATE VALVES W/ BOXES (1) 12" X 8" REDUCER CONNECT TO EXIST. 8" WL W/ (2) 8"X45° BENDS W/ RESTRAINTS

SCALE
HORIZ. 1"=50'
VERT. 1"=5'

DESIGNED BY: PB	DRAWN BY: PB	CHECKED BY: JB
DATE: 08/07/15	DATE: 08/07/15	DATE: 08/07/15

* NOTE: CONTRACTOR SHALL EXCAVATE AND SURVEY TO LOCATE THE EXISTING SAS SERVICE AT STA. 158+31 LT. PRIOR TO CONSTRUCTING THE NEW WATER LINE. THE NEW WATER LINE PROFILE SHALL BE CONSTRUCTED WITH A SLOPE OF 0% AS FAR BACK AS REQUIRED TO PROVIDE 12" MIN. CLEARANCE TO THE SAS SERVICE AND TO AVOID CREATING A HIGH POINT IN THE LINE.

6805 | 6800 | 6795 | 6790 | 6785 | 6780 | 6775 | 6770 | 6765

EXISTING GROUND ℄ CERRILLOS RD.

PROFILE GRADE ℄ CERRILLOS RD.

SEWER MH B3/6
STA. 160+79.34, 1.87' LT
RIM= 6780.65'
INVERT IN ELEV= 6772.95'

SEWER MH B3/7
STA. 164+86.96, 3.84' LT
RIM= 6788.92'
INVERT IN ELEV= 6779.30'
INVERT OUT ELEV= 6779.30'

SEWER MH B3/8
STA. 168+02.43, 0.67
INVERT IN ELEV= 6785.
INVERT OUT ELEV= 67

SEWER MH B3/9
STA. 171+27.95, 0.26' RT
RIM= 6800.78'
INVERT OUT ELEV= 6790.10'

12" CLR. MIN.

S=0% *

8" W LT. — 407.54 L.F. — 1.56% — 15 in. Concrete

8" W LT. — 315.56 L.F. — 1.95% — 15 in. Concrete

12" W RT. — 325.57 L.F. — 1.43% — 15 in. Concrete

STA. 167+07.80, 20.63' RT.
NEW TYPE "C" MANHOLE
CONNECT TO EXISTING SAS
RIM.=6792.44
INV. IN=6784.58
INV. OUT=6784.51

6775.13 | 6776.24 | 6777.29 | 6778.36 | 6779.11 | 6780.17 | 6781.15 | 6781.80 | 6783.29 | 6784.29 | 6785.05 | 6785.77 | 6786.60 | 6787.48 | 6788.73 | 6789.98 | 6790.37 | 6791.12 | 6791.88 | 6793.03 | 6794.41 | 6795.42 | 6796.34 | 6797.32 | 6798.30 | 6798.92 | 6800.07

158+00 | 159+00 | 160+00 | 161+00 | 162+00 | 163+00 | 164+00 | 165+00 | 166+00 | 167+00 | 168+00 | 169+00 | 170+00 | 171+00

JAMES H. BUCKMAN — NEW MEXICO — 13062 — REGISTERED PROFESSIONAL ENGINEER — 10/15/15

CERRILLOS ROAD
WATER AND SEWER
PLAN AND PROFILE

PARSONS BRINCKERHOFF

CITY OF SANTA FE	SHEET
NEW MEXICO PROJECT NO.	NO.
CN S100130	11–15

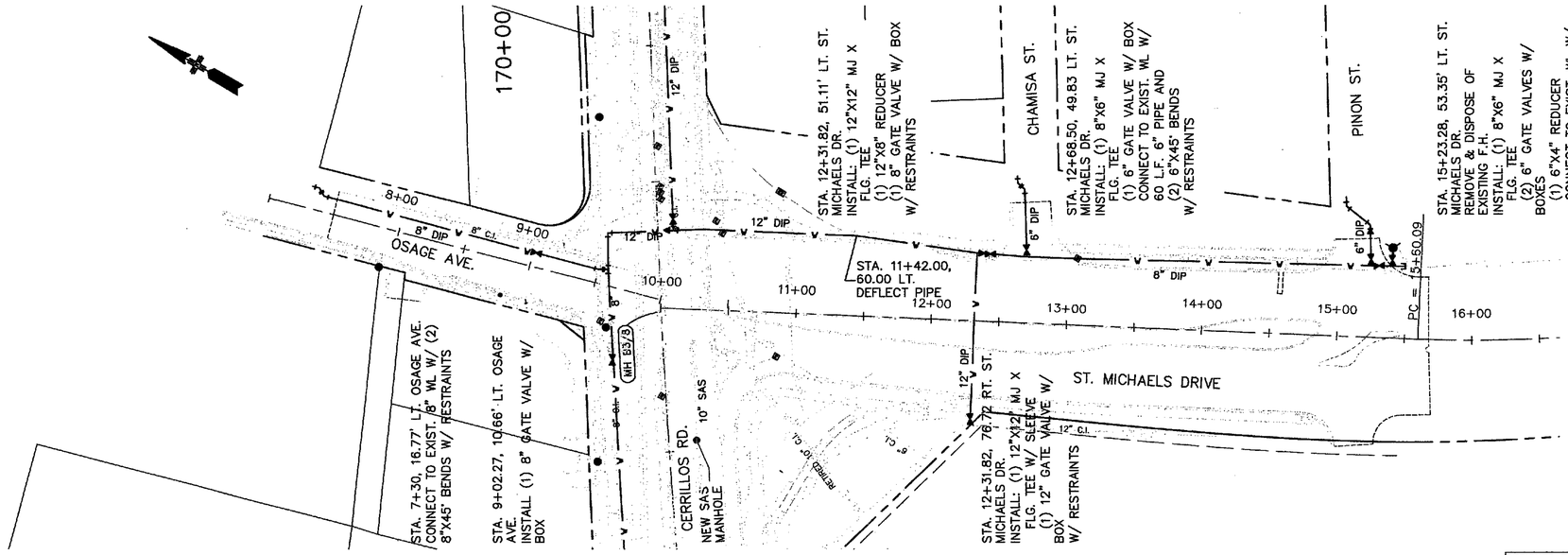

SCALE
HORIZ. 1"=50'
VERT. 1"=5'

DESIGNED BY: PB	DRAWN BY: PB	CHECKED BY: JB
DATE: 08/07/15	DATE: 08/07/15	DATE: 08/07/15

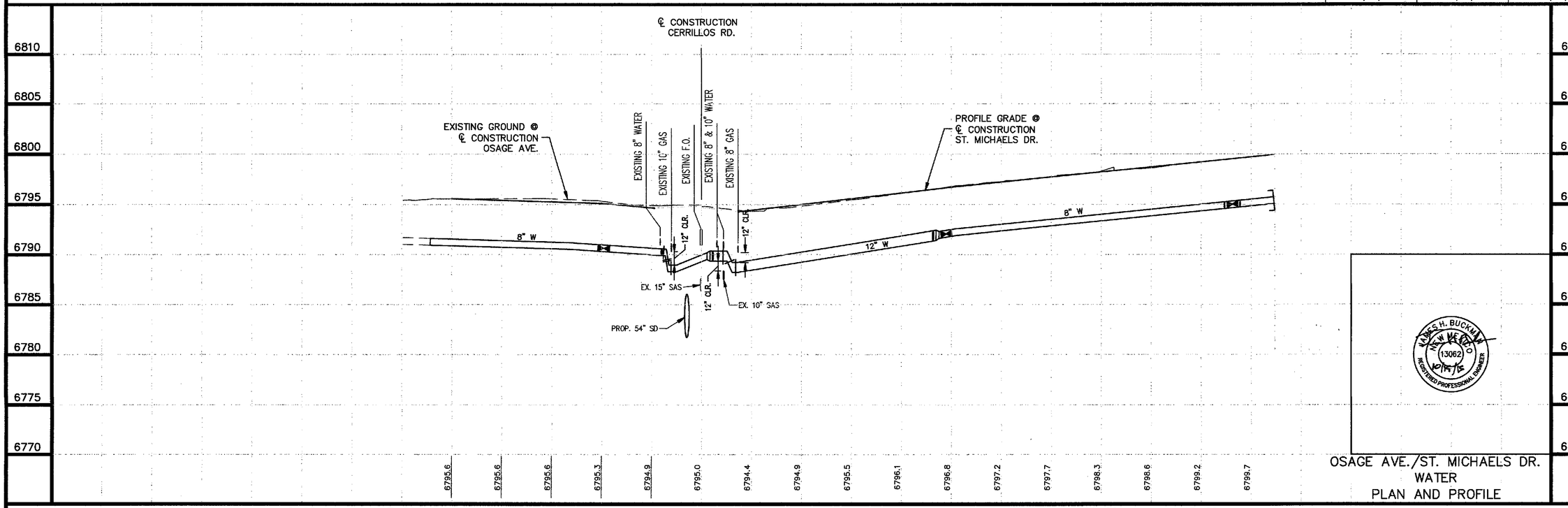

JAMES H. BUCKMAN NEW MEXICO 13062 REGISTERED PROFESSIONAL ENGINEER 10/15/15

OSAGE AVE./ST. MICHAELS DR.
WATER
PLAN AND PROFILE

PARSONS BRINCKERHOFF

CITY OF SANTA FE	SHEET
NEW MEXICO PROJECT NO.	NO.
CN S100130	11–16

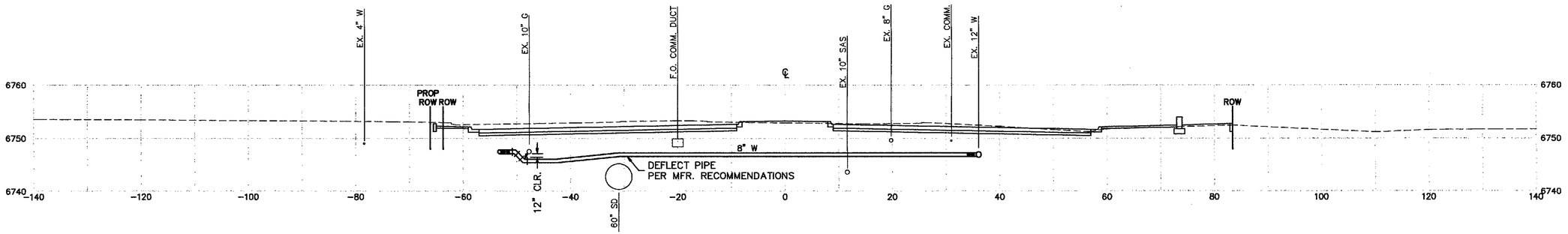

STA. 142+35.33 WATERLINE CROSS SECTION
SKEW=2.50° RT. FWD.

NO.	DESCRIPTION	DATE	BY
3			
2			
1			

REVISIONS (OR CHANGE NOTICES)

JAMES H. BUCKMAN NEW MEXICO 13062 REGISTERED PROFESSIONAL ENGINEER

CITY OF SANTA FE

CERRILLOS ROAD PHASE IIC
CAMINO CARLOS REY TO
LLANO STREET
SANTA FE COUNTY

WATER CROSS SECTIONS
CERRILLOS ROAD

SCALE
HORIZ. 1"=10'
VERT. 1"=10'

DESIGNED BY: PB	DRAWN BY: PB	CHECKED BY: JB
DATE: 08/07/15	DATE: 08/07/15	DATE: 08/07/15

J:\33693 Cerrillos Ph IIC\04 Engineering-33693\Plans\11_Sheets\16 X-SECTIONS.dwg Oct 07, 2015 – 11:04am Saved By: buckman

N.M. PROJECT NO. CN S100130 SHEET NO. 11–16

RECORD DRAWING
FOR INFORMATION ONLY

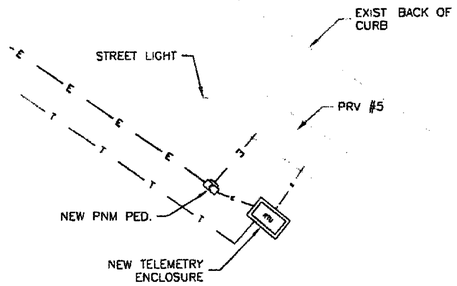

DETAIL "A"

Valve Denied

Stub Tel Conduit in a Smaller Sleeve @ Qwest Pedestal

LACE CONDUIT W/PULL LINE FROM PRV BOX TO QWEST PEDESTAL
BRING 2 DUIT 8 P.O.

Remove/Replace Approx 15' of 2" Conduit For Boring

SIDEWALK

CURB TYP.

Insert = 3' Ft

POWER POLE WITH TRANSFORMER W. 130

QWEST BOX

QWEST BOX

12'

CAMINO CARLOS REY

CURB TYP.

185'

CERRILLOS RD.

48'

CURB TYP.

SIDEWALK

STREET LIGHT

PRV #5

Telemetry Enclosure

PNM Pedestal

NEW PNM PED

NEW TELEMETRY ENCLOSURE

SEE DETAIL "A" THIS SHEET

Bore from Pit to Pit Direct Distance 625 LF

GRAPHIC SCALE
0 10 15 20
(IN FEET)
1 inch = 10 ft

LEGEND

E E	NEW U/G PNM POWER LINE
T T	NEW U/G QWEST LINE
S S	NEW U/G SIGNAL CONDUIT AND CABLE
	EXIST. FENCE LINE
E	PNM ELECTRIC METER PEDESTAL
RTU	NEW TELEMETRY ENCLOSURE
	EXIST. QWEST PEDESTAL (TIE-IN)
E	ELECTRIC RISER (ON EXIST POLE)
T	TELEPHONE RISER (ON EXIST POLE)
	EXIST. PAVEMENT AREA

NOTE:
U/G DENOTES UNDERGROUND

PRELIMINARY NOT FOR CONSTRUCTION

NO.	REVISIONS	DATE	BY	CHK.
1	ADDED NEW ENCLOSURE AND PED.	2/15/10	DDO	FJD
2	ADDED POWER AND TEL LINES	03/21/10	JAB	FJD

Automation Electric, LLC
304 S.Brassie Drive
Payson, Arizona, 85541
TEL: 928 478 8672
FAX: 928 468 2055

CITY OF SANTA FE WATER DIVISION
SANTA FE, NM

JOB NO.	SANTAFE
DESIGNED BY:	FJD
DRAWN BY:	DD
CHECKED BY:	FJ
APPROVED BY:	FJD
DATE:	12/05/09

PRV MONITORING

SCALE: HORIZ: 1"= 10'
CONT. INTERVAL = N/A
DRAWING NO. PRV5E
SHEET NO. 5 OF: XX

RECORD DRAWING
FOR INFORMATION ONLY

CONDUIT & WIRE SCHEDULE

CONDUIT SIZE	FROM	TO	WIRE
2"	PNM PEDESTAL	UTILITY POLE	AS PER QWEST SPEC 3#1 XHHW Cu Sol.
3/4"	PNM PEDESTAL	TELEMETRY	(1) - #12 BLACK, (1) - #12 WHITE, (1) - #12 GREEN (XHHW)
1 1/4"	PNM PEDESTAL	PRV VAULT	(1) - #12 RED, (1) - #12 WHITE, (1) - #12 GREEN (XHHW)
3/4"	TELEMETRY	PRV VAULT	(2) BELDEN CABLE 2 PAIR WITH DRAIN, (2) - # 14 BLUE (XHHW)
2"	TELEMETRY	QWEST PEDESTAL	200 POUND RATED PULL STRING CALIBRATED IN FEET
1"	TELEMETRY	PRV VAULT	PULL STRING
--	--	--	--

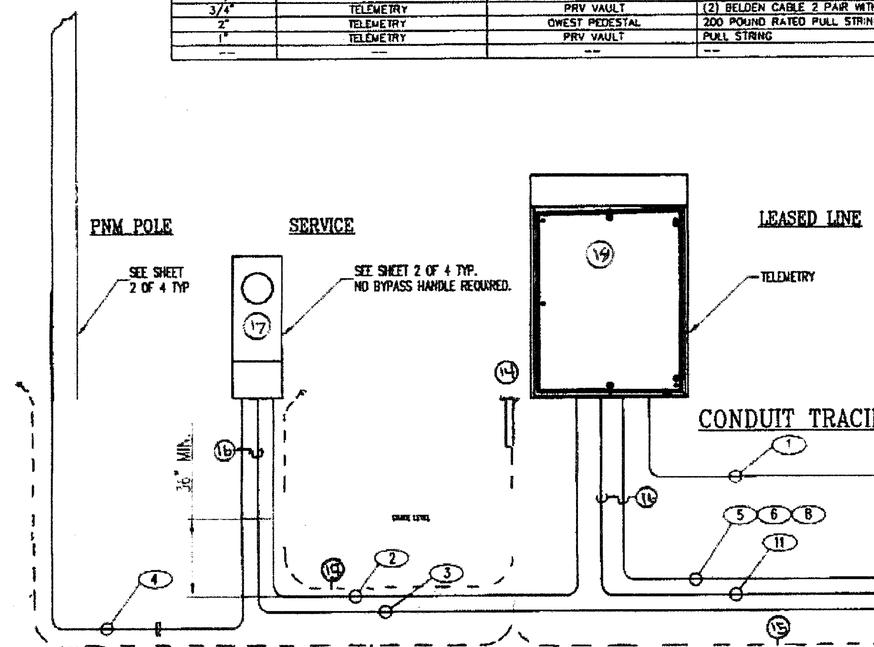

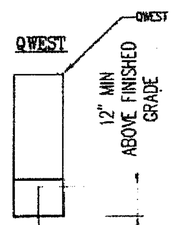

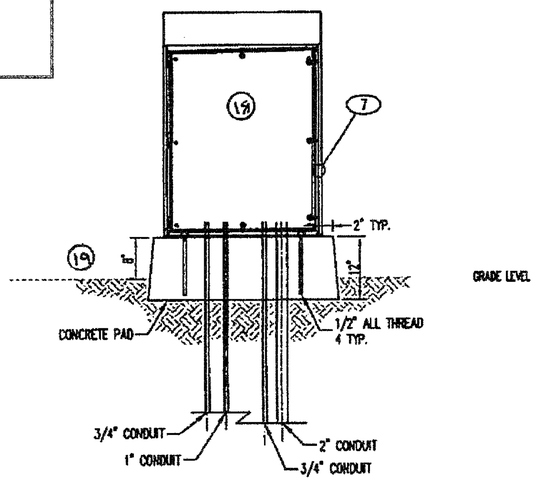

TELEMETRY PANEL

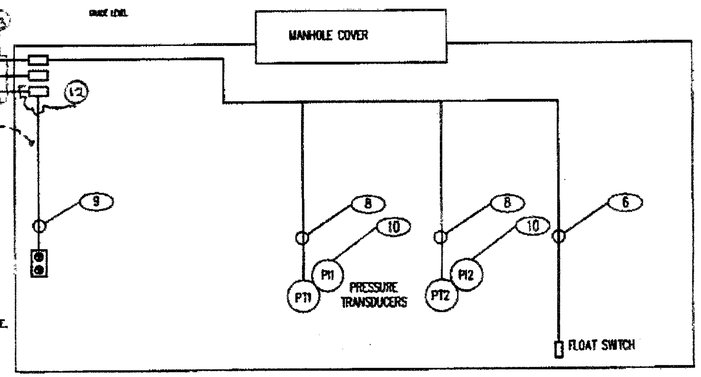

PRV VAULT

NOTES :

1. ALL CONDUITS MUST TRANSITION THROUGH A SEAL-OFF TO PRV VAULT.
2. THE FIRST 5' OF THE CONDUIT FROM VAULT MUST BE PVC COATED RIGID OR TAPED RIGID, CAST IN VAULT WALL WITH THREADED END INSIDE THE VAULT AND OTHER END THREADED AND COUPLED TO PVC [SCHEDULE 40] OR CONTINUED IN PVC COATED RIGID OR TAPED RIGID TO SERVICE.
3. ALL TRANSITION FROM UNDERGROUND TO EXPOSED LOCATIONS SHALL UTILIZE PVC COATED OR TAPED RIGID GALVANIZED CONDUIT
4. USE MYERS HUBS ON ALL CONDUIT ENDS AT THE ENCLOSURE.
5. TRANSITION WITH A STRAIN RELIEF FROM CONDUIT TO CABLE FOR THE FLOAT AND SECURE CONDUIT TO WALL. LEAVE A 12" CABLE PIGTAIL FROM STRAIN RELIEF TO THE FLOAT.
6. BONDING WIRE FOR CONDUIT TRACING - SEE CITY OF SANTA FE PUBLIC UTILITIES DEPARTMENT WATER DIVISION CONSTRUCTION STANDARDS AND SPECIFICATIONS, SECTION C28. BRING TRACE WIRE INTO ENCLOSURE NEXT TO CONDUIT STUBS, LABEL DESTINATION ON EACH WIRE. ONLY NEEDED FOR CONDUIT RUNS WITH PVC SECTIONS. 6" SAND BELOW AND ABOVE CONDUIT WITH RED DANGER TAPE 12" ABOVE ELECTRICAL CONDUIT AND SIGNAL CONDUIT

1. 2" CONDUIT TO UTILITY - AS PER QWEST SPEC..
2. 3/4" CONDUIT - 120 VAC POWER FOR TELEMETRY.
3. 1 1/4" CONDUIT FOR GFI OUTLET AND OTHER CIRCUITS.
4. 2" CONDUIT TO UTILITY PNM. (TYPICAL)
5. 3/4" CONDUIT FOR PRESSURE TRANSDUCERS.
6. 3/4" CONDUIT FOR FLOAT WITH STRAIN RELIEF AND LIQUID SEAL.
7. SS ENCLOSURE HOFFMAN SW363016SS
8. 3/4" CONDUIT FOR SIGNAL WIRE (2) - 2 PAIR SHIELDED CABLE WITH DRAIN WIRE.
9. 3/4" CONDUIT FOR GFI OUTLETS - MOUNTED 12 INCHES BELOW ROOF.
10. DWYER LIQUID FILLED FOUR INCH PRESSURE GAUGE, STAINLESS STEEL, PER S.D.C.W. DTL. 23 - PRV PRESSURE GAUGE MONT DETAIL, WETTED PARTS, HARD TUBED, ZERO TO THREE HUNDRED (0 - 300) PSI DISPLAY.
11. 1" CONDUIT FOR FUTURE USE

NO	REVISIONS	DATE	BY	CHK.

Automation Electric, LLC
304 S.Brassie Drive
Payson, Arizona, 85541
TEL: 928 478 8672
FAX: 928 468 2055

CITY OF SANTA FE WATER DIVISION
SANTA FE, NM

JOB NO.	SWAFE
DESIGNED BY:	FJD
DRAWN BY:	DD
CHECKED BY:	RJ
APPROVED BY:	FJD
DATE:	12/05/09

GENERAL LAYOUT DETAIL
ABOVE GROUND INSTALLATION

SCALE: HORIZ: 1" = N/A
CONT. INTERVAL = N/A
DRAWING NO. B000A1
SHEET NO. 1 OF 4

ADDITIONAL KEYED NOTES TO DWG. #B000A1

Date: 11/2/10

Note: See attached Dwg #B000A1 with keyed note mark-ups as follows.

ITEM #

1. Add keyed note as follows:
   #12 – Install 1 ¼" Tee Condulet with a conduit extended to a 2 Gang Bell Box with blank cover for future Cathodic Protection "and" extend another conduit to a GFCI outlet per keyed note #9.
2. Add keyed note as follows:
   #13 – Core drill penetrations and use "Link Seal" to seal.
3. Add keyed note as follows:
   #14 – Install Handley #M2FW (Black) L Monitoring Station with Lid #LIT2I5(Black)2LN. Install flush in top of Telemetry Cabinet concrete pad.
4. Add keyed note as follows:
   #15 – Install #12 solid copper trace wires in open ditches on conduit runs indicated on drawing and per City of Santa Fe Public Utilities Dept. Water Div. "Construction Standards and Specifications" Section C28 and Trace Wire Detail Dwg #24. Not required if conduit is bored or previously installed.
5. Add keyed note as follows:
   #16 - Install seal offs at this location.
6. Add keyed note as follows:
   #17 – Install 120/240 Volt 200 Amp 10 KAIC Rated Underground Meter Pedestal with By-Pass Lever, Pent-a-head option, 100 Amp 2 Pole Main Circuit Breaker, 12 full size 1 Pole Provisions, per PNM Service Electric Guide Dwg. #MS-5-2.0 and DS-4-10.0. Provide 3 each 1 pole 20 amp circuit breakers.
7. Add keyed note as follows:
   #18 – Install Hoffman Enclosure #WS303616SS with Hoffman #APLKJIC6SS Padlock Kit.
8. Add keyed note as follows:
   #19 – For Telemetry Enclosure mounting options and pad details, see attached Sketch # SK001, SK002 and SK003 Dated 11/2/10. Heights for 1 ¼" Seal Off (5.06")and Hub (1.12") based on Appleton #'s EYSF125 and HUB-125D. 1 ¼" is the largest Seal Off that will be required under the Telemetry Cabinet.
9. Amend first Line Item to "Conduit & Wire Schedule" as follows:
   Remove "As per PNM Spec" and
   Replace with " 3 each #4 XHHW Cu Stranded"

RECORD DRAWING
FOR INFORMATION ONLY

NO.	DESCRIPTION	DATE	BY
3			
2			
1			

REVISIONS (OR CHANGE NOTICES)

CITY OF SANTA FE

CERRILLOS ROAD PHASE IIC
CAMINO CARLOS REY TO
LLANO STREET
SANTA FE COUNTY

WATER AND SEWER DETAILS

SCALE
NOT TO SCALE

DESIGNED BY: PB	DRAWN BY: PB	CHECKED BY: JB
DATE: 08/07/15	DATE: 08/07/15	DATE: 08/07/15

CITY OF SANTA FE	SHEET
NEW MEXICO PROJECT NO.	NO.
CN S100130	11–20

PARSONS BRINCKERHOFF

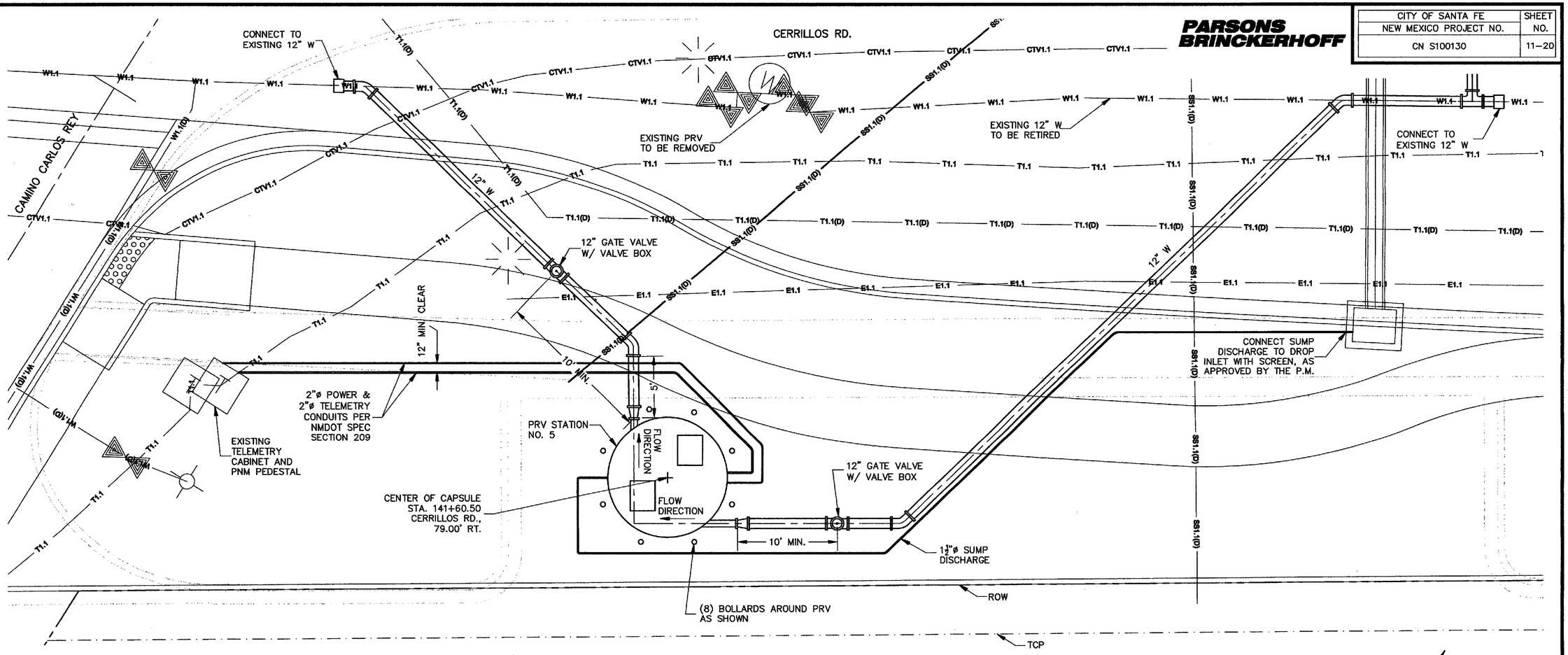

PRV STATION NO. 5 PLAN

METERED PRESSURE REDUCING STATION NO. 5 NOTES

1. CONTRACTOR SHALL FURNISH AND INSTALL A METERED PRESSURE REDUCING STATION – MANUFACTURED PER PROJECT SPECIFICIATIONS AND PLANS. CONTRACTOR SHALL PROVIDE SUBMITTAL FOR PRESSURE REDUCING STATION NO LATER THAN 60 DAYS AFTER NTP ISSUANCE.

2. CONTRACTOR SHALL FURNISH AND INSTALL A REINFORCED CONCRETE FOUNDATION SLAB AND ANCHOR BOLTS WITH FASTENERS. CONTRACTOR SHALL PROVIDE THE FOUNDATION SLAB AND ANCHORING PLAN. PLAN SHALL BE PREPARED AND SEALED BY A REGISTERED NEW MEXICO PROFESSIONAL ENGINEER. PLAN SHALL BE SUBMITTED WITH THE PRESSURE REDUCING STATION SUBMITTAL.

3. CONTRACTOR SHALL PROVIDE ALL WORK, INCLUDING BUT NOT LIMITED TO, EXCAVATIONS WITH SLOPE PROTECTION, CONCRETE FOUNDATION SLAB, FURNISHING AND INSTALLING MANUFACTURED METERED PRESSURE REDUCING STATION, MAKING ALL PIPING, POWER, AND TELEMETRY CONNECTIONS, BACKFILLING WITH COMPACTION, BOLLARDS, SITE GRADING AND OTHER INCIDENTAL WORK TO PROVIDE A FULLY FUNCTIONING AND OPERATING PRESSURE REDUCING STATION. CONTRACTOR SHALL COORDINATE STARTUP, COMMISSIONING, AND TRAINING SERVICES WITH THE STATION MANUFACTURER AND WATER DIVISON. THE STATION MANUFACTURER SHALL PROVIDE STATION COMMSSIONING, FACTORY TRAINING AND O&M MANUALS TO WATER DIVISION PER PROJECT SPECIFICATIONS.

4. CONTRACTOR SHALL MAKE ALL WATERLINE CONNECTIONS AS SHOWN ON THE PROJECT PLANS AND SHALL INCLUDE ALL INCIDENTAL ITEMS SUCH AS TIE RODS OR RETAINERS AND COUPLING MATERIALS. PIPING AND FITTINGS BEYOND THE METERED PRESSSURE REDUCING STATION STUBOUTS SHALL BE PAID FOR UNDER THE APPROPRIATE WATERLINE BID ITEMS.

5. CONTRACTOR SHALL FURNISH AND INSTALL POWER AND TELEMETRY CONDUITS AND WIRING BETWEEN THE EXISTING ABOVE GRADE ELECTRIC PEDESTAL AND RTU UNIT AND THE PRESSURE REDUCING STATION POWER AND TELEMETRY PANEL CONNECTIONS AS SHOWN ON THE PROJECT PLANS. CONDUIT AND WIRING DETAILS ARE SHOWN ON GENERAL LAYOUT DRAWING B000A1 WITH ADDITIONAL KEYED NOTES TO DRAWING B00A1. REFER TO SHEETS 11–17 THRU 11–19.

6. CONTRACTOR SHALL FURNISH AND INSTALL SUMP PUMP DISCHARGE PIPING BETWEEN CONNECTION TO PRESSURE REDUCING STATION AND DROP INLET AS SHOWN ON THE PROJECT PLANS.

7. THE EXISTING PRV STATION NO. 5 SHALL REMAIN IN SERVICE UNTIL THE NEW METERED PRESSURE REDUCION STATION IS READY FOR FINAL CONNECTION. CONTRACTOR SHALL COORDINATE CUTOVER OF THE NEW PRESSURE REDUCING STATION WITH WATER DIVISION AND A CUTOVER PERIOD NOT TO EXCEED 48 HOURS WILL BE ALLOWED.

8. CONTRACTOR SHALL DEMOLISH THE OLD PRV STATION NO. 5 AND DELIVER SALVAGABLE ITEMS (PRV VALVES, FLOAT SWITHES, PRESSURE TRANSMITTERS, ETC.) AS DIRECTED BY WATER DIVISION. SALVAGED EQUIPMENT SHALL BE DELIVERED TO 801 W. SAN MATEO ROAD, SANTA FE, NM. CONTRACTOR SHALL REMOVE AND DISPOSE OF ALL PIPING WITHIN VAULT AND FOR 5 FEET BEYOND EXTERIOR OF VAULT, REMOVE AND DISPOSE OF CONCRETE VAULT WALLS, FOOTING, AND COVER AS DIRECTED BY PROJECT ENGINEER AND FURNISH AND FURNISH AND INSTALL BACKFILL MATERIAL.

NO.	DESCRIPTION	DATE	BY
3			
2			
1			

REVISIONS (OR CHANGE NOTICES)

JAMES H. BUCKMAN NEW MEXICO 13082 REGISTERED PROFESSIONAL ENGINEER 11/18/15

SCALE 1"=5'

DESIGNED BY: PB	DRAWN BY: PB	CHECKED BY: JB
DATE: 08/07/15	DATE: 08/07/15	DATE: 08/07/15

CITY OF SANTA FE

CERRILLOS ROAD PHASE IIC
CAMINO CARLOS REY TO
LLANO STREET
SANTA FE COUNTY

PRV STATION NO. 5
PLAN

J:\33693 Cerrillos Ph IIC\04 Engineering-33693\Plans\11_Sheets\20 PRV Layout.dwg Oct 07, 2015 – 11:07am Saved By: buckman

N.M. PROJECT NO. CN S100130 SHEET NO. 11–20

PARSONS BRINCKERHOFF

CITY OF SANTA FE NEW MEXICO PROJECT NO.	SHEET NO.
CN S100130	11–21

LEGEND

ITEM	DESCRIPTION
1	MANHOLE FRAME & COVER, refer to manhole frame and cover detail Dwg. No. SAS-4
2	CONCRETE ADJUSTMENT RINGS or CONCRETE BRICK, refer to concrete adjustment detail Dwg. No. SAS-5
3	CONCRETE COLLAR, refer to concrete collar detail Dwg. No. SAS-6
4	PRECAST REINFORCED CONCRETE RISER, CONE or FLAT TOP, with 5"(in) wall thickness, refer to general note CM-2
5	PRECAST REINFORCED CONCRETE BASE RISER, with suitable sized openings, refer to general note CM-2A
6	CONCRETE BASE, refer to concrete base detail Dwg. No. SAS-7
7	SEWER PIPE, refer to general note CM-1
8	6"(in) GROUT FILLET, on upper half of pipe and around base
9	ADAPTER, MANHOLE, refer to manhole adapter detail Dwg. No. SAS-8
10	PIPE PENETRATION INTO MANHOLE, refer to manhole adapter detail Dwg. No. SAS-8
11	PIPE SUPPORT, CONCRETE, shall extend out-side of manhole a maximum of 18"(in) to bell of first joint and shall cradle pipe half pipe
12	CONCRETE FILL, 3000 p.s.i., refer to general note CR-6
13	SHELF, to be 9"(in) minimum width with 1"(in) per 1'-0" slope, from crown of pipe
14	CUT UPPER HALF OF PIPE, after manhole has been completed and inspected by engineer
15	HAND FORMED CHANNELS, shall be on a uniform radius and shall not hold water
16	INVERT ELEVATIONS OF LATERAL LINES, shall be the same as the springline elevation of the sewer main, where possible
17	CHANGE SLOPE OF PIPE, at center of manhole
18	APPROVED WATER STOP, to be with type of pipe

NOT TO SCALE

CONSTRUCTION NOTES

A. 3'(FT) MINIMUM DISTANCE OF VERTICAL DROP. LESS THAN 3'(FT) DISALLOWS DROP MANHOLE.

B. FORM PIPE INVERT IN SHELF. INVERT TO SPRINGLINE.

C. SHELF SLOPE, 1"(IN) PER FT.

D. MANHOLE TYPE FOR UPPER PORTION IS SPECIFIED IN MANHOLE TYPE "E" DETAIL DWG. NO. SAS-2.

E. USE D.I. OR P.V.C.(SDR 35) PIPE THROUGHOUT DROP. ALL PIPING IN DROP STRUCTURE FROM THE TEE IS INCREASED ONE PIPE SIZE FROM THE SERVICE LINE. (SERVICE-8" DROP-10")

F. USE BELL AND SPIGOT 45° LONG RADIUS BEND.

G. CONCRETE SUPPORT WIDTH EQUALS PIPE O.D. PLUS 6"(IN) MINIMUM EACH SIDE.

H. CONCRETE FILL.

J. CAST IN PLACE REINFORCED CONCRETE BASE REQUIRED. CONCRETE BASE TO BE POURED IN PLACE USING NO.4 BARS AT 6"(IN) O.C. EACH WAY FOR MANHOLE DEPTH OF 10'(FT) OR GREATER. NO4 BARS AT 12"(IN) O.C. EACH WAY FOR MANHOLE DEPTH LESS THAN 10'(FT) IN DEPTH.

K. FOR NEW DROP ON EXISTING MANHOLE CONSTRUCT 3X3 REINFORCED CONCRETE BASE BEFORE CONSTRUCTING DROP SUPPORT.

L. MINIMUM 2"(IN) ABOVE SPRINGLINE OR AS SHOWN ON PLAN.

M. REDUCER

N. SERVICE LINE

O. EXTEND PIPE 3"(IN) MINIMUM 6"(IN) MAXIMUM INTO MANHOLE TOP. 1/2 PIPE REMOVED.

DROP MANHOLE DETAIL DWG. #: SAS-1

DENOTES ELEVATION PER ENGINEERS DESIGN

(See Dwg. # SAS-14 for Type "C" Flat Top)

MANHOLE TYPE "E" DETAIL DWG # SAS-2

NOT TO SCALE

PLAN VIEW OF MANHOLE BASE CONNECTION DWG. # SAS-3

NOT TO SCALE

GENERAL NOTES

CONSTRUCTION REQUIREMENTS

CR-1 MATERIALS AND WORK:
CURRENT NEW MEXICO STANDARD SPECIFICATIONS FOR PUBLIC WORKS CONSTRUCTION (referred to as NM APWA) WITH MODIFICATIONS NOTED BY THE CITY OF SANTA FE.

CR-2 APPROVED PLANS:
USE PLANS BEARING THE OFFICIAL STAMP OF THE DESIGN ENGINEER AND BEARING THE APPROVAL SIGNATURE OF THE CITY WATER QUALITY DIVISION OR APPROVED REPRESENTATIVE. CONSTRUCTION PERFORMED WITHOUT APPROVED PLANS WILL BE REJECTED.

CR-3 SEWER HOOK-UP PERMIT:
OBTAIN PERMITS FOR THE PROJECT BEFORE COMMENCING ANY SEWER CONSTRUCTION. CONSTRUCTION PERFORMED WITHOUT OBTAINING PERMITS SHALL BE REJECTED.
A. CONSTRUCTION PLANS SHALL INDICATE THE CLASS OF BEDDING TO BE USED. CHANGE OF BEDDING MAY REQUIRE A CHANGE IN PIPE CLASSIFICATION OR WALL THICKNESS.

CR-4 SUBSTITUTIONS OR CHANGES:
ALL SUBSTITUTIONS OR CHANGES MUST BE APPROVED BY THE CITY WATER QUALITY DIVISION OR CITY APPROVED REPRESENTATIVE PRIOR TO CONSTRUCTION. ALL SUBSTITUTIONS OR CHANGES MUST BE SUBMITTED BY THE DESIGN ENGINEER TO THE CITY WATER QUALITY DIVISION OR APPROVED REPRESENTATIVE. WHERE APPROPRIATE, SUBMITTAL MUST INCLUDE FABRICATION DRAWINGS, WORKING DRAWINGS AND MATERIAL SPECIFICATIONS OR TEST DATA TO JUSTIFY SUBSTITUTIONS OR CHANGES. DESIGN ENGINEER SHALL AUTHORIZE ANY DRAWINGS FOR SUBSTITUTIONS AND CHANGES AND SUBMIT THEM TO THE CITY WATER QUALITY DIVISION FOR APPROVAL. UNAUTHORIZED SUBMITTALS WILL BE REJECTED.

CR-5 MANUFACTURER'S CERTIFICATES:
WHEN CERTIFICATES OF COMPLIANCE AND TEST REPORTS ARE REQUIRED FOR MATERIALS, DOCUMENTS SHALL BE SUBMITTED TO THE CITY WATER QUALITY DIVISION OR APPROVED REPRESENTATIVE AT THE TIME OF MATERIALS DELIVERY TO THE JOBSITE.

CR-6 CONTRACTOR REQUIREMENTS:
CONTRACTOR PERFORMING WORK ON PUBLIC SEWER LINES SHALL BE A LICENSED UTILITY CONTRACTOR.

INSTALLATION

I-1 LAYING PIPE:
AS PER SECTION 900, NM APWA: PIPE SHALL BE PLACED AND BEDDED IN A FROST FREE TRENCH: GASKET SHALL BE FULLY SEATED AND NOT SLIPPED: PIPE SHALL BE LAID THROUGH MANHOLE LOCATIONS ON STRAIGHT AND UP TO 22 1/2 DEGREE DEFLECTIONS.
A. IF PIPE TRENCH INSTALLATION CONFIGURATION EXCEEDS THE LIMITS OF NM APWA STANDARDS, SECTION 700, OR AS DEFINED ON THE CONSTRUCTION PLANS, THE DESIGN ENGINEER WILL SPECIFY THE NEW PIPE CLASSIFICATION OR WALL THICKNESS.
B. TYPE I TRENCH CONFIGURATION IS NORMALLY USED WHEN TRENCH DEPTHS ARE 8'(FT.) OR LESS. TYPE II TRENCH CONFIGURATION IS NORMALLY USED WHEN TRENCH DEPTHS ARE 9'(FT.) AND OVER, DEPENDING ON SOIL CONDITIONS. REFER TO NM APWA STANDARDS SECTION 700.

I-2 MANHOLE CONSTRUCTION:
A. BASE:
1. CAST IN PLACE: ON UNDISTURBED FROST FREE SUBGRADE
2. PRECAST UNIT: ON PEA GRAVEL WITH COMPLETE EVEN BEARING
B. PRECAST BARREL:
1. JOINTS: FILL COMPLETELY WITH NON-SHRINK GROUT AND TROWEL
2. MANHOLE ADAPTOR: INSTALL OVER PVC PIPE AND FILL IN PENETRATION WITH NON-SHRINK GROUT.
3. CAST IN PLACE BASES: SHALL ACHIEVE A MINIMUM OF 2500 PSI COMPRESSIVE STRENGTH BEFORE SETTING PRECAST BARREL SECTIONS.

I-3 EXCAVATION AND BACKFILL:
AS PER SECTION 700, NM APWA: SATURATION BY FLOODING OR JETTING METHODS IS NOT PERMITTED WITHOUT A SOILS ENGINEERING REPORT RECOMMENDING THESE METHODS. MECHANICAL OR VIBRATORY COMPACTORS SHALL NOT BE USED ON THE BEDDING AND 12"(IN.) OF INITIAL BACKFILL. COMPACTION SHALL BE DETERMINED PER AASHTO T-180.

CONSTRUCTION MATERIALS

CM-1 SEWER PIPE: (CERTIFICATES REQUIRED)
A. VITRIFIED CLAY: REFER TO SECTION 125, NM APWA FOR EXTRA STRENGTH VCP.
B. PLASTIC (PVC): REFER TO SECTION 121, NM APWA, AS MODIFIED BY THE CITY.
1. 4" THRU 15" (inch) DIAMETER, ASTM D-3034 OR ASTM F-789 PIPE. MINIMUM PS-46 STRENGTH. SDR-35 OR EQUAL
2. LARGER THAN 15" (IN.) DIAMETER: ASTM F 679 VOL. 08.04.
C. HDPE PIPE PER ASTM D-1248 CLASS III WHEN APPROVED BY WATER QUALITY DIVISION ENGINEER.
D. PVC RESTRAINED JOINTS: SERIES 1350 OR SERIES 1390 FOR COUPLINGS PRODUCED BY UNI-FLANGE CORPORATION, LOCKING COUPLINGS WITH NYLON SPLINE, MARKETED AS "YELLOWMINE" AND PRODUCED BY CERTAINTEED CORPORATION, OR APPROVED EQUAL.
E. MANHOLE ADAPTERS: ASBESTOS CEMENT (AC) MANHOLE ADAPTERS, OR AC/PVC ADAPTER COUPLINGS:
F. BUILDING SERVICE STUBS: CAST IRON DWV, PVC SCH. 40 DWV.
G. SERVICE CONNECTIONS:
1. VCP PIPE: FACTORY TEE FITTINGS: SECTION 125 NM APWA.
2. PVC PIPE: CAST IRON BODIES TAPPING SADDLE WITH STAINLESS STEEL TENSION STRAP AND FITTINGS: FOWLER "QUICKWAY", GENECO, HERSEY "PIONEER", OR APPROVED EQUAL.
H. SOIL CLASSIFICATION: THE UNIFIED SOIL CLASSIFICATION SYSTEM PER ASTM D 2487 TABLE 701.3.5 NM APWA.

CM-2 MANHOLES:
A. CONCRETE MANHOLES: PRECAST REINFORCED CONCRETE RISERS, REDUCING CONES, AND ADJUSTMENT RINGS PER ASTM C 478 VOL. 04.05. BASES MAY BE FIELD PLACED CONCRETE OR PRECAST CONCRETE PER ASTM C 478 VOL. 04.05 (CERTIFICATES REQUIRED). CRACKED OR VISIBLY DEFECTIVE UNITS WILL BE REJECTED.
B. PIPE PENETRATIONS: PRECAST UNITS SHALL HAVE SUITABLE SIZED OPENINGS CAST INTO BARREL AT PROPER ANGLES FOR PIPE AND MANHOLE ADAPTERS.
C. MANHOLE STEPS: REFER TO SECTION 920.4.7 NM APWA POLYPROPYLENE ENCASED GRADE 60 STEEL BY M.A. INC. OR APPROVED EQUAL: 14"(IN.) WIDE, 16"(IN.) MAXIMUM SPACING.
D. FRAMES AND COVERS:
1. CASTING: SHALL CONFORM TO SECTION 160, 161 & 162, NM, APWA CLASS 30B. (CERTIFICATES AND SHOP DRAWINGS REQUIRED)
2. MINIMUM COVER WEIGHT: 165 POUNDS
3. MINIMUM COMBINED WEIGHT: 365 POUNDS +/- 5%
4. BEARING SURFACES: SHALL BE MATCHED FOR A FIRM NON ROCKING SEAT BETWEEN FRAME AND COVER. MINIMUM SEATING WIDTH: 7/8"(IN.)
5. COATING: NONE
6. COVER LETTERINGS: SANTA FE, N.M, SANITARY SEWER
7. CASTINGS: CAST MANUFACTURER AND MODEL NUMBER ON FRAME AND COVER.
8. CASTINGS TOLERANCE: +/- 1/16"(IN.) PER FOOT OF OVERALL DIMENSION. OUT OF ROUND CASTINGS AND LOOSE FITTING UNITS WILL BE REJECTED IN THE FIELD.

CM-3 CONCRETE ENCASEMENT:
A. REQUIREMENTS:
1. WHEN THE PIPE COVER IS 36" (IN.) OR LESS.
2. WHEN VITRIFIED CLAY CROSSES AN ARROYO.
3. WHEN A WATER LINE PASSES BELOW OR LESS THAN 18" (IN.) ABOVE THE EXISTING SEWER LINE.
4. WHEN A PARALLEL WATER LINE IS LESS THAN 10'(FT.) HORIZONTALLY AND LESS THAN 2'(FT.) ABOVE THE SEWER LINE.
5. THE SEWER LINE SHALL BE ENCASED IN CONCRETE 6"(IN.) THICK AS DETAILED, AND EXTEND AT LEAST 10'(FT.) ON EACH SIDE OF THE WATER LINE.

FIELD QUALITY CONTROL

FQC-1 TESTING AND INSPECTION:
A. SUPERVISION: CONDUCTED BY DESIGN ENGINEER.
B. CERTIFICATION: DESIGN ENGINEER SHALL CERTIFY THAT THE PROJECT HAS BEEN COMPLETED IN ACCORDANCE TO PLANS & SPECIFICATIONS AND SHALL SUBMIT A CERTIFICATION OF COMPLIANCE STATEMENT WITH STAMP AND SIGNATURE.
C. EQUIPMENT AND ASSISTANCE: PROVIDED BY CONTRACTOR.

FQC-2 LINE AND GRADE: ALLOWABLE TOLERANCE BETWEEN STRUCTURES FROM DESIGN:
A. LINE: 0.20 FOOT
B. GRADE: 0.02 FOOT; PIPE SHALL NOT HOLD BACK ANY WATER.

FQC-3 LEAKAGE TEST:
AIR TEST REQUIRED: REFER TO SECTION 901.7 NM APWA.

FQC-4 TELEVISION INSPECTION:
CONTRACTOR SHALL PROVIDE A CERTIFIED CCTV SEWERLINE INSPECTION AND RECORD TAPES AT HIS OWN EXPENSE.

FQC-5 ALL CONNECTIONS TO EXISTING MANHOLES. INCLUDES REHABILITATING THE TIE IN MANHOLE TO MEET THESE STANDARD CONSTRUCTION DETAILS.

NOTE: REVISIONS TO THIS SHEET SHALL BE MADE UNDER THE AUTHORITY OF THE CITY OF SANTA FE ONLY.

CONTRACT NO. DACA47-03-D-0012 TASK ORDER NO.3

CITY OF SANTA FE
WATER QUALITY DIVISION

TITLE: SANITARY SEWER STANDARD CONSTRUCTION DETAILS - A

	REVISIONS		
DATE: JULY 1992	8-3-92		FILE = E:\AUTO\DWG\SCDT1-4
DRAWN BY: G. CHAVEZ	12-14-92		SHEET 3 OF 12
CADD RENDITION BY: G. CHAVEZ	11-16-94		
APPROVED BY: E. BROWN			

NO.	DESCRIPTION	DATE	BY
3			
2			
1			

REVISIONS (OR CHANGE NOTICES)

SCALE
NOT TO SCALE

DESIGNED BY: PB	DRAWN BY: PB	CHECKED BY: JB
DATE: 08/07/15	DATE: 08/07/15	DATE: 08/07/15

CITY OF SANTA FE

CERRILLOS ROAD PHASE IIC
CAMINO CARLOS REY TO
LLANO STREET
SANTA FE COUNTY

SANITARY SEWER STANDARD CONSTRUCTION DETAILS

PARSONS BRINCKERHOFF

LEGEND

ITEM	DESCRIPTION
1	MANHOLE FRAME & COVER, refer to manhole frame and cover detail Dwg. No. SAS-4
2	CONCRETE ADJUSTMENT RINGS or CONCRETE BRICK, refer to concrete adjustment detail Dwg. No. SAS-5
3	CONCRETE COLLAR, refer to concrete collar detail Dwg. No. SAS-6
4	PRECAST REINFORCED CONCRETE RISER, CONE or FLAT TOP, with 5"(in) wall thickness, refer to general note CM-2
5	PRECAST REINFORCED CONCRETE BASE RISER, with suitable sized openings, refer to general note CM-2A
6	CONCRETE BASE, refer to concrete base detail Dwg. No. SAS-7
7	SEWER PIPE, refer to general note CM-1
8	6"(in) GROUT FILLET, on upper half of pipe and around base
9	ADAPTER, MANHOLE, refer to manhole adapter detail Dwg. No. SAS-8
10	PIPE PENETRATION INTO MANHOLE, refer to manhole adapter detail Dwg. No. SAS-8
11	PIPE SUPPORT, CONCRETE, shall extend out-side of manhole a maximum of 18"(in) to bell of first joint and shall cradle pipe half pipe
12	CONCRETE FILL, 3000 p.s.i., refer to general note CR-6
13	SHELF, to be 9"(in) minimum width with 1"(in) per 1'-0" slope, from crown of pipe
14	CUT UPPER HALF OF PIPE, after manhole has been completed and inspected by engineer
15	HAND FORMED CHANNELS, shall be on a uniform radius and shall not hold water
16	INVERT ELEVATIONS OF LATERAL LINES, shall be the same as the springline elevation of the sewer main, where possible
17	CHANGE SLOPE OF PIPE, at center of manhole
18	APPROVED WATER STOP, to be with type of pipe

NOT TO SCALE

MANHOLE FRAME & COVER DETAIL /DWG # SAS-4

PROFILE VIEW

NOT TO SCALE

MANHOLE ADJUSTMENT DETAIL /DWG # SAS-5

CONCRETE COLLAR DETAIL /DWG. # SAS-6 NOT TO SCALE

NOT TO SCALE

CONCRETE BASE DETAIL /DWG. # SAS-7

NOT TO SCALE

MANHOLE ADAPTER DETAIL /DWG. # SAS-8

NOTE: AT RIVER AND ARROYO CROSSINGS

RESTRAINED JOINT DETAIL /DWG. # SAS-9 NOT TO SCALE

NOT TO SCALE

SERVICE CONNECTION DETAILS /DWG. # SAS-10

GENERAL NOTES

CONSTRUCTION REQUIREMENTS

CR-1 MATERIALS AND WORK:
CURRENT NEW MEXICO STANDARD SPECIFICATIONS FOR PUBLIC WORKS CONSTRUCTION (referred to as NM APWA) WITH MODIFICATIONS NOTED BY THE CITY OF SANTA FE.

CR-2 APPROVED PLANS:
USE PLANS BEARING THE OFFICIAL STAMP OF THE DESIGN ENGINEER AND BEARING THE APPROVAL SIGNATURE OF THE CITY WATER QUALITY DIVISION OR APPROVED REPRESENTATIVE. CONSTRUCTION PERFORMED WITHOUT APPROVED PLANS WILL BE REJECTED.

CR-3 SEWER HOOK-UP PERMIT:
OBTAIN PERMITS FOR THE PROJECT BEFORE COMMENCING ANY SEWER CONSTRUCTION. CONSTRUCTION PERFORMED WITHOUT OBTAINING PERMITS SHALL BE REJECTED.
A. CONSTRUCTION PLANS SHALL INDICATE THE CLASS OF BEDDING TO BE USED. CHANGE OF BEDDING MAY REQUIRE A CHANGE IN PIPE CLASSIFICATION OR WALL THICKNESS.

CR-4 SUBSTITUTIONS OR CHANGES:
ALL SUBSTITUTIONS OR CHANGES MUST BE APPROVED BY THE CITY WATER QUALITY DIVISION OR CITY APPROVED REPRESENTATIVE PRIOR TO CONSTRUCTION. ALL SUBSTITUTIONS OR CHANGES MUST BE SUBMITTED BY THE DESIGN ENGINEER TO THE CITY WATER QUALITY DIVISION OR APPROVED REPRESENTATIVE. WHERE APPROPRIATE, SUBMITTAL MUST INCLUDE FABRICATION DRAWINGS, WORKING DRAWINGS AND MATERIAL SPECIFICATIONS OR TEST DATA TO JUSTIFY SUBSTITUTIONS OR CHANGES. DESIGN ENGINEER SHALL AUTHORIZE ANY DRAWINGS FOR SUBSTITUTIONS AND CHANGES AND SUBMIT THEM TO THE CITY WATER QUALITY DIVISION FOR APPROVAL. UNAUTHORIZED SUBMITTALS WILL BE REJECTED.

CR-5 MANUFACTURER'S CERTIFICATES:
WHEN CERTIFICATES OF COMPLIANCE AND TEST REPORTS ARE REQUIRED FOR MATERIALS, DOCUMENTS SHALL BE SUBMITTED TO THE CITY WATER QUALITY DIVISION OR APPROVED REPRESENTATIVE AT THE TIME OF MATERIALS DELIVERY TO THE JOBSITE.

CR-6 CONTRACTOR REQUIREMENTS:
CONTRACTOR PERFORMING WORK ON PUBLIC SEWER LINES SHALL BE A LICENSED UTILITY CONTRACTOR.

CONSTRUCTION MATERIALS

CM-1 SEWER PIPE: (CERTIFICATES REQUIRED)
A. VITRIFIED CLAY: REFER TO SECTION 125, NM APWA FOR EXTRA STRENGTH VCP.
B. PLASTIC (PVC): REFER TO SECTION 121, NM APWA, AS MODIFIED BY THE CITY.
1. 4" THRU 15" (inch) DIAMETER, ASTM D-3034 OR ASTM F-789 PIPE. MINIMUM PS-46 STRENGTH. SDR-35 OR EQUAL
2. LARGER THAN 15" (IN.) DIAMETER: ASTM F 679 VOL. 08.04.
C. HDPE PIPE PER ASTM D-1248 CLASS III WHEN APPROVED BY WATER QUALITY DIVISION ENGINEER.
D. PVC RESTRAINED JOINTS: SERIES 1350 OR SERIES 1390 FOR COUPLINGS PRODUCED BY UNI-FLANGE CORPORATION, LOCKING COUPLINGS WITH NYLON SPLINE, MARKETED AS "YELLOWMINE" AND PRODUCED BY CERTAINTEED CORPORATION, OR APPROVED EQUAL.
E. MANHOLE ADAPTERS: ASBESTOS CEMENT (AC) MANHOLE ADAPTERS, OR AC/PVC ADAPTER COUPLINGS.
F. BUILDING SERVICE STUBS: CAST IRON DWV, PVC SCH. 40 DWV.
G. SERVICE CONNECTIONS:
1. VCP PIPE: FACTORY TEE FITTINGS: SECTION 125 NM APWA.
2. PVC PIPE: CAST IRON BODIES TAPPING SADDLE WITH STAINLESS STEEL TENSION STRAP AND FITTINGS: FOWLER "QUICKWAY", GENECO, HERSEY "PIONEER", OR APPROVED EQUAL.
H. SOIL CLASSIFICATION: THE UNIFIED SOIL CLASSIFICATION SYSTEM PER ASTM D 2487 TABLE 701.3.5 NM APWA.

CM-2 MANHOLES:
A. CONCRETE MANHOLES: PRECAST REINFORCED CONCRETE RISERS, REDUCING CONES, AND ADJUSTMENT RINGS PER ASTM C 478 VOL. 04.05. BASES MAY BE FIELD PLACED CONCRETE OR PRECAST CONCRETE PER ASTM C 478 VOL. 04.05 (CERTIFICATES REQUIRED). CRACKED OR VISIBLY DEFECTIVE UNITS WILL BE REJECTED.
B. PIPE PENETRATIONS: PRECAST UNITS SHALL HAVE SUITABLE SIZED OPENINGS CAST INTO BARREL AT PROPER ANGLES FOR PIPE AND MANHOLE ADAPTERS.
C. MANHOLE STEPS: REFER TO SECTION 920.4.7 NM APWA POLYPROPYLENE ENCASED GRADE 60 STEEL BY M.A. INC. OR APPROVED EQUAL: 14"(IN.) WIDE, 16"(IN.) MAXIMUM SPACING.
D. FRAMES AND COVERS:
1. CASTING: SHALL CONFORM TO SECTION 160, 161 & 162, NM, APWA CLASS 30B. (CERTIFICATES AND SHOP DRAWINGS REQUIRED)
2. MINIMUM COVER WEIGHT: 165 POUNDS
3. MINIMUM COMBINED WEIGHT: 365 POUNDS +/- 5%
4. BEARING SURFACES: SHALL BE MATCHED FOR A FIRM NON ROCKING SEAT BETWEEN FRAME AND COVER. MINIMUM SEATING WIDTH: 7/8"(IN.)
5. COATING: NONE
6. COVER LETTERINGS: SANTA FE, N.M. SANITARY SEWER
7. CASTINGS: CAST MANUFACTURER AND MODEL NUMBER ON FRAME AND COVER.
8. CASTINGS TOLERANCE: +/- 1/16"(IN.) PER FOOT OF OVERALL DIMENSION. OUT OF ROUND CASTINGS AND LOOSE FITTING UNITS WILL BE REJECTED IN THE FIELD.

CM-3 CONCRETE ENCASEMENT:
A. REQUIREMENTS:
1. WHEN THE PIPE COVER IS 36" (IN.) OR LESS.
2. WHEN VITRIFIED CLAY CROSSES AN ARROYO.
3. WHEN A WATER LINE PASSES BELOW OR LESS THAN 18" (IN.) ABOVE THE EXISTING SEWER LINE.
4. WHEN A PARALLEL WATER LINE IS LESS THAN 10'(FT.) HORIZONTALLY AND LESS THAN 2'(FT.) ABOVE THE SEWER LINE.
5. THE SEWER LINE SHALL BE ENCASED IN CONCRETE 6"(IN.) THICK AS DETAILED, AND EXTEND AT LEAST 10'(FT.) ON EACH SIDE OF THE WATER LINE.

INSTALLATION

I-1 LAYING PIPE:
AS PER SECTION 900, NM APWA: PIPE SHALL BE PLACED AND BEDDED IN A FROST FREE TRENCH; GASKET SHALL BE FULLY SEATED AND NOT SLIPPED; PIPE SHALL BE LAID THROUGH MANHOLE LOCATIONS ON STRAIGHT AND UP TO 22 1/2 DEGREE DEFLECTIONS.
A. IF PIPE TRENCH INSTALLATION CONFIGURATION EXCEEDS THE LIMITS OF NM APWA STANDARDS, SECTION 700, OR AS DEFINED ON THE CONSTRUCTION PLANS, THE DESIGN ENGINEER WILL SPECIFY THE NEW PIPE CLASSIFICATION OR WALL THICKNESS.
B. TYPE I TRENCH CONFIGURATION IS NORMALLY USED WHEN TRENCH DEPTHS ARE 8'(FT.) OR LESS. TYPE II TRENCH CONFIGURATION IS NORMALLY USED WHEN TRENCH DEPTHS ARE 9'(FT.) AND OVER, DEPENDING ON SOIL CONDITIONS. REFER TO NM APWA STANDARDS SECTION 700.

I-2 MANHOLE CONSTRUCTION:
A. BASE:
1. CAST IN PLACE: ON UNDISTURBED FROST FREE SUBGRADE
2. PRECAST UNIT: ON PEA GRAVEL WITH COMPLETE EVEN BEARING
B. PRECAST BARREL:
1. JOINTS: FILL COMPLETELY WITH NON-SHRINK GROUT AND TROWEL
2. MANHOLE ADAPTOR: INSTALL OVER PVC PIPE AND FILL IN PENETRATION WITH NON-SHRINK GROUT.
3. CAST IN PLACE BASES: SHALL ACHIEVE A MINIMUM OF 2500 PSI COMPRESSIVE STRENGTH BEFORE SETTING PRECAST BARREL SECTIONS.

I-3 EXCAVATION AND BACKFILL:
AS PER SECTION 700, NM APWA: SATURATION BY FLOODING OR JETTING METHODS IS NOT PERMITTED WITHOUT A SOILS ENGINEERING REPORT RECOMMENDING THESE METHODS. MECHANICAL OR VIBRATORY COMPACTORS SHALL NOT BE USED ON THE BEDDING AND 12"(IN.) OF INITIAL BACKFILL. COMPACTION SHALL BE DETERMINED PER AASHTO T-180.

FIELD QUALITY CONTROL

FQC-1 TESTING AND INSPECTION:
A. SUPERVISION: CONDUCTED BY DESIGN ENGINEER.
B. CERTIFICATION: DESIGN ENGINEER SHALL CERTIFY THAT THE PROJECT HAS BEEN COMPLETED IN ACCORDANCE TO PLANS & SPECIFICATIONS AND SHALL SUBMIT A CERTIFICATION OF COMPLIANCE STATEMENT WITH STAMP AND SIGNATURE.
C. EQUIPMENT AND ASSISTANCE: PROVIDED BY CONTRACTOR.

FQC-2 LINE AND GRADE: ALLOWABLE TOLERANCE BETWEEN STRUCTURES FROM DESIGN:
A. LINE: 0.20 FOOT
B. GRADE: 0.02 FOOT; PIPE SHALL NOT HOLD BACK ANY WATER.

FQC-3 LEAKAGE TEST:
AIR TEST REQUIRED: REFER TO SECTION 901.7 NM APWA.

FQC-4 TELEVISION INSPECTION:
CONTRACTOR SHALL PROVIDE A CERTIFIED CCTV SEWERLINE INSPECTION AND RECORD TAPES AT HIS OWN EXPENSE.

FQC-5 ALL CONNECTIONS TO EXISTING MANHOLES INCLUDES REHABILITATING THE TIE IN MANHOLE TO MEET THESE STANDARD CONSTRUCTION DETAILS.

NOTE: REVISIONS TO THIS SHEET SHALL BE MADE UNDER THE AUTHORITY OF THE CITY OF SANTA FE ONLY.

CONTRACT NO. DACA47-03-D-0012 TASK ORDER NO.

CITY OF SANTA FE
WATER QUALITY DIVISION

TITLE: SANITARY SEWER
STANDARD CONSTRUCTION DETAILS - B

	REVISIONS		
DATE: JULY 1992			FILE # E:\AUTO\DWG\SCDT2-4
DRAWN BY: G. CHAVEZ	1 8-3-92		SHEET 4 OF 12
CADD RENDITION BY: G. CHAVEZ	2 12-10-92		
APPROVED BY: E. BROWN	3 11-15-94		

NO.	DESCRIPTION	DATE	BY
3			
2			
1			

REVISIONS (OR CHANGE NOTICES)

BRYAN JAMES ROMERO NEW MEXICO 13309 REGISTERED PROFESSIONAL ENGINEER 8-25-15

CITY OF SANTA FE

CERRILLOS ROAD PHASE IIC
CAMINO CARLOS REY TO
LLANO STREET
SANTA FE COUNTY

SANITARY SEWER STANDARD CONSTRUCTION DETAILS

SCALE
NOT TO SCALE

DESIGNED BY: PB	DRAWN BY: PB	CHECKED BY: JB
DATE: 08/07/15	DATE: 08/07/15	DATE: 08/07/15

PARSONS BRINCKERHOFF

CITY OF SANTA FE NEW MEXICO PROJECT NO.	SHEET NO.
CN S100130	11-23

TRENCH BEDDING AND INSTALLATION DETAILS /DWG. # SAS-11

NOT TO SCALE

GENERAL NOTES

CONSTRUCTION REQUIREMENTS

CR-1 MATERIALS AND WORK:
CURRENT NEW MEXICO STANDARD SPECIFICATIONS FOR PUBLIC WORKS CONSTRUCTION (referred to as NM APWA) WITH MODIFICATIONS NOTED BY THE CITY OF SANTA FE.

CR-2 APPROVED PLANS:
USE PLANS BEARING THE OFFICIAL STAMP OF THE DESIGN ENGINEER AND BEARING THE APPROVAL SIGNATURE OF THE CITY WATER QUALITY DIVISION OR APPROVED REPRESENTATIVE. CONSTRUCTION PERFORMED WITHOUT APPROVED PLANS WILL BE REJECTED.

CR-3 SEWER HOOK-UP PERMIT:
OBTAIN PERMITS FOR THE PROJECT BEFORE COMMENCING ANY SEWER CONSTRUCTION. CONSTRUCTION PERFORMED WITHOUT OBTAINING PERMITS SHALL BE REJECTED.
A. CONSTRUCTION PLANS SHALL INDICATE THE CLASS OF BEDDING TO BE USED. CHANGE OF BEDDING MAY REQUIRE A CHANGE IN PIPE CLASSIFICATION OR WALL THICKNESS.

CR-4 SUBSTITUTIONS OR CHANGES:
ALL SUBSTITUTIONS OR CHANGES MUST BE APPROVED BY THE CITY WATER QUALITY DIVISION OR CITY APPROVED REPRESENTATIVE PRIOR TO CONSTRUCTION. ALL SUBSTITUTIONS OR CHANGES MUST BE SUBMITTED BY THE DESIGN ENGINEER TO THE CITY WATER QUALITY DIVISION OR APPROVED REPRESENTATIVE. WHERE APPROPRIATE, SUBMITTAL MUST INCLUDE FABRICATION DRAWINGS, WORKING DRAWINGS AND MATERIAL SPECIFICATIONS OR TEST DATA TO JUSTIFY SUBSTITUTIONS OR CHANGES. DESIGN ENGINEER SHALL AUTHORIZE ANY DRAWINGS FOR SUBSTITUTIONS AND CHANGES AND SUBMIT THEM TO THE CITY WATER QUALITY DIVISION FOR APPROVAL. UNAUTHORIZED SUBMITTALS WILL BE REJECTED.

CR-5 MANUFACTURER'S CERTIFICATES:
WHEN CERTIFICATES OF COMPLIANCE AND TEST REPORTS ARE REQUIRED FOR MATERIALS, DOCUMENTS SHALL BE SUBMITTED TO THE CITY WATER QUALITY DIVISION OR APPROVED REPRESENTATIVE AT THE TIME OF MATERIALS DELIVERY TO THE JOBSITE.

CR-6 CONTRACTOR REQUIREMENTS:
CONTRACTOR PERFORMING WORK ON PUBLIC SEWER LINES SHALL BE A LICENSED UTILITY CONTRACTOR.

INSTALLATION

I-1 LAYING PIPE:
AS PER SECTION 900, NM APWA: PIPE SHALL BE PLACED AND BEDDED IN A FROST FREE TRENCH: GASKET SHALL BE FULLY SEATED AND NOT SLIPPED: PIPE SHALL BE LAID THROUGH MANHOLE LOCATIONS ON STRAIGHT AND UP TO 22 1/2 DEGREE DEFLECTIONS.
A. IF PIPE TRENCH INSTALLATION CONFIGURATION EXCEEDS THE LIMITS OF NM APWA STANDARDS, SECTION 700, OR AS DEFINED ON THE CONSTRUCTION PLANS, THE DESIGN ENGINEER WILL SPECIFY THE NEW PIPE CLASSIFICATION OR WALL THICKNESS.
B. TYPE I TRENCH CONFIGURATION IS NORMALLY USED WHEN TRENCH DEPTHS ARE 8'(FT.) OR LESS. TYPE II TRENCH CONFIGURATION IS NORMALLY USED WHEN TRENCH DEPTHS ARE 9'(FT.) AND OVER, DEPENDING ON SOIL CONDITIONS. REFER TO NM APWA STANDARDS SECTION 700.

I-2 MANHOLE CONSTRUCTION:
A. BASE:
1. CAST IN PLACE: ON UNDISTURBED FROST FREE SUBGRADE
2. PRECAST UNIT: ON PEA GRAVEL WITH COMPLETE EVEN BEARING
B. PRECAST BARREL:
1. JOINTS: FILL COMPLETELY WITH NON-SHRINK GROUT AND TROWEL
2. MANHOLE ADAPTOR: INSTALL OVER PVC PIPE AND FILL IN PENETRATION WITH NON-SHRINK GROUT.
3. CAST IN PLACE BASES: SHALL ACHIEVE A MINIMUM OF 2500 PSI COMPRESSIVE STRENGTH BEFORE SETTING PRECAST BARREL SECTIONS.

I-3 EXCAVATION AND BACKFILL:
AS PER SECTION 700, NM APWA: SATURATION BY FLOODING OR JETTING METHODS IS NOT PERMITTED WITHOUT A SOILS ENGINEERING REPORT RECOMMENDING THESE METHODS. MECHANICAL OR VIBRATORY COMPACTORS SHALL NOT BE USED ON THE BEDDING AND 12"(IN.) OF INITIAL BACKFILL. COMPACTION SHALL BE DETERMINED PER AASHTO T-180.

CONSTRUCTION MATERIALS

CM-1 SEWER PIPE: (CERTIFICATES REQUIRED)
A. VITRIFIED CLAY: REFER TO SECTION 125, NM APWA FOR EXTRA STRENGTH VCP.
B. PLASTIC (PVC): REFER TO SECTION 121, NM APWA, AS MODIFIED BY THE CITY.
1. 4" THRU 15" (inch) DIAMETER, ASTM D-3034 OR ASTM F-789 PIPE. MINIMUM PS-46 STRENGTH. SDR-35 OR EQUAL.
2. LARGER THAN 15" (IN.) DIAMETER: ASTM F 679 VOL. 08.04.
C. HDPE PIPE PER ASTM D-1248 CLASS III WHEN APPROVED BY WATER QUALITY DIVISION ENGINEER.
D. PVC RESTRAINED JOINTS: SERIES 1350 OR SERIES 1390 FOR COUPLINGS PRODUCED BY UNI-FLANGE CORPORATION, LOCKING COUPLINGS WITH NYLON SPLINE, MARKETED AS "YELLOWMINE" AND PRODUCED BY CERTAINTEED CORPORATION, OR APPROVED EQUAL.
E. MANHOLE ADAPTERS: ASBESTOS CEMENT (AC) MANHOLE ADAPTERS, OR AC/PVC ADAPTER COUPLINGS.
F. BUILDING SERVICE STUBS: CAST IRON DWV, PVC SCH. 40 DWV.
G. SERVICE CONNECTIONS:
1. VCP PIPE: FACTORY TEE FITTINGS: SECTION 125 NM APWA.
2. PVC PIPE: CAST IRON BODIES TAPPING SADDLE WITH STAINLESS STEEL TENSION STRAP AND FITTINGS: FOWLER "QUICKWAY", GENECO, HERSEY "PIONEER", OR APPROVED EQUAL.
H. SOIL CLASSIFICATION: THE UNIFIED SOIL CLASSIFICATION SYSTEM PER ASTM D 2487 TABLE 701.3.5 NM APWA.

CM-2 MANHOLES:
A. CONCRETE MANHOLES: PRECAST REINFORCED CONCRETE RISERS, REDUCING CONES, AND ADJUSTMENT RINGS PER ASTM C 478 VOL. 04.05. BASES MAY BE FIELD PLACED CONCRETE OR PRECAST CONCRETE PER ASTM C 478 VOL. 04.05 (CERTIFICATES REQUIRED). CRACKED OR VISIBLY DEFECTIVE UNITS WILL BE REJECTED.
B. PIPE PENETRATIONS: PRECAST UNITS SHALL HAVE SUITABLE SIZED OPENINGS CAST INTO BARREL AT PROPER ANGLES FOR PIPE AND MANHOLE ADAPTERS.
C. MANHOLE STEPS: REFER TO SECTION 920.4.7 NM APWA POLYPROPYLENE ENCASED GRADE 60 STEEL BY M.A. INC. OR APPROVED EQUAL: 14"(IN.) WIDE, 16"(IN.) MAXIMUM SPACING.
D. FRAMES AND COVERS:
1. CASTING: SHALL CONFORM TO SECTION 160, 161 & 162, NM, APWA CLASS 30B. (CERTIFICATES AND SHOP DRAWINGS REQUIRED)
2. MINIMUM COVER WEIGHT: 165 POUNDS
3. MINIMUM COMBINED WEIGHT: 365 POUNDS +/- 5%
4. BEARING SURFACES: SHALL BE MATCHED FOR A FIRM NON ROCKING SEAT BETWEEN FRAME AND COVER. MINIMUM SEATING WIDTH: 7/8"(IN.)
5. COATING: NONE
6. COVER LETTERINGS: SANTA FE, N.M. SANITARY SEWER
7. CASTINGS: CAST MANUFACTURER AND MODEL NUMBER ON FRAME AND COVER.
8. CASTINGS TOLERANCE: +/- 1/16"(IN.) PER FOOT OF OVERALL DIMENSION. OUT OF ROUND CASTINGS AND LOOSE FITTING UNITS WILL BE REJECTED IN THE FIELD.

CM-3 CONCRETE ENCASEMENT:
A. REQUIREMENTS:
1. WHEN THE PIPE COVER IS 36" (IN.) OR LESS.
2. WHEN VITRIFIED CLAY CROSSES AN ARROYO.
3. WHEN A WATER LINE PASSES BELOW OR LESS THAN 18" (IN.) ABOVE THE EXISTING SEWER LINE.
4. WHEN A PARALLEL WATER LINE IS LESS THAN 10'(FT.) HORIZONTALLY AND LESS THAN 2'(FT.) ABOVE THE SEWER LINE.
5. THE SEWER LINE SHALL BE ENCASED IN CONCRETE 6"(IN.) THICK AS DETAILED, AND EXTEND AT LEAST 10'(FT.) ON EACH SIDE OF THE WATER LINE.

FIELD QUALITY CONTROL

FQC-1 TESTING AND INSPECTION:
A. SUPERVISION: CONDUCTED BY DESIGN ENGINEER.
B. CERTIFICATION: DESIGN ENGINEER SHALL CERTIFY THAT THE PROJECT HAS BEEN COMPLETED IN ACCORDANCE TO PLANS & SPECIFICATIONS AND SHALL SUBMIT A CERTIFICATION OF COMPLIANCE STATEMENT WITH STAMP AND SIGNATURE.
C. EQUIPMENT AND ASSISTANCE: PROVIDED BY CONTRACTOR.

FQC-2 LINE AND GRADE: ALLOWABLE TOLERANCE BETWEEN STRUCTURES FROM DESIGN:
A. LINE: 0.20 FOOT
B. GRADE: 0.02 FOOT: PIPE SHALL NOT HOLD BACK ANY WATER.

FQC-3 LEAKAGE TEST:
AIR TEST REQUIRED: REFER TO SECTION 901.7 NM APWA.

FQC-4 TELEVISION INSPECTION:
CONTRACTOR SHALL PROVIDE A CERTIFIED CCTV SEWERLINE INSPECTION AND RECORD TAPES AT HIS OWN EXPENSE.

FQC-5 ALL CONNECTIONS TO EXISTING MANHOLES INCLUDES REHABILITATING THE TIE IN MANHOLE TO MEET THESE STANDARD CONSTRUCTION DETAILS.

NOTE: REVISIONS TO THIS SHEET SHALL BE MADE UNDER THE AUTHORITY OF THE CITY OF SANTA FE ONLY.

TYPICAL UTILITIES SEPARATION DETAIL /DWG. # SAS-12

LEGEND

Ⓢ SEWER
Ⓖ GAS
Ⓦ WATER
℞ PROPERTY LINE
℄ CENTER LINE

NOT TO SCALE

BELL OR COUPLING INSTALLATION DETAIL /DWG. # SAS-13

NOT TO SCALE

CONTRACT NO. DACA47-03-D-0012 TASK ORDER NO. 3

CITY OF SANTA FE WATER QUALITY DIVISION			
TITLE: SANITARY SEWER STANDARD CONSTRUCTION DETAILS - C			
DATE: JULY 1992	REVISIONS		FILE = E:\AUTO\DWG\SCDT3-4
DRAWN BY: G. CHAVEZ	1 8-4-92		
CADD RENDITION BY: G. CHAVEZ	2 12-14-92		SHEET 5 OF 12
APPROVED BY: E. BROWN	3 11-16-94		

NO.	DESCRIPTION	DATE	BY
3			
2			
1			

REVISIONS (OR CHANGE NOTICES)

BRIAN JAMES ROMERO NEW MEXICO 13303 REGISTERED PROFESSIONAL ENGINEER 9-25-

CITY OF SANTA FE

CERRILLOS ROAD PHASE IIC
CAMINO CARLOS REY TO
LLANO STREET
SANTA FE COUNTY

SCALE
NOT TO SCALE

SANITARY SEWER STANDARD CONSTRUCTION DETAILS

DESIGNED BY: PB	DRAWN BY: PB	CHECKED BY: JB
DATE: 08/07/15	DATE: 08/07/15	DATE: 08/07/15

J:\33693 Cerrillos Ph IIC\04 Engineering-33693\Plans\11_Sheets\21-24 MH Standards.dwg Sep 16, 2015 - 3:41pm Saved By: millernz

PARSONS BRINCKERHOFF

CITY OF SANTA FE	SHEET
NEW MEXICO PROJECT NO.	NO.
CN S100130	11–24

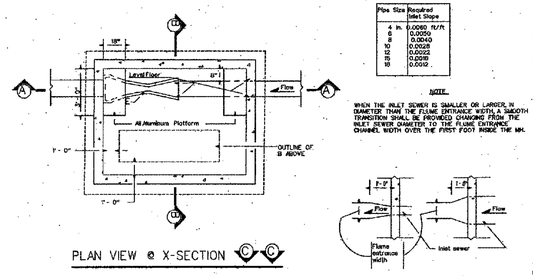

TABLE 1

Pipe Size	Required Inlet Slope
4 in	0.0060 ft/ft
6	0.0050
8	0.0040
10	0.0028
12	0.0022
15	0.0018
18	0.0012

NOTE

WHEN THE INLET SEWER IS SMALLER OR LARGER IN DIAMETER THAN THE FLUME ENTRANCE WIDTH, A SMOOTH TRANSITION SHALL BE PROVIDED CHANGING FROM THE INLET SEWER DIAMETER TO THE FLUME ENTRANCE CHANNEL WIDTH OVER THE FIRST FOOT INSIDE THE MH.

GENERAL NOTES

1. THIS DESIGN IS APPLICABLE FOR MANHOLES 8.0 FT. & LESS IN DEPTH MEASURED FROM FLOWLINE CHANNEL INVERT ELEVATION TO TOP OF MANHOLE COVER. MANHOLES GREATER THAN 8.0 FT. SHALL BE DESIGNED BY A NEW MEXICO LICENSED PE/SE.
2. MONITORING MANHOLE SHALL BE LOCATED ON PRIVATE PROPERTY OUTSIDE OF CITY RIGHT-OF-WAY. 24" DIAMETER MANHOLE SHALL HAVE ACCESS TO THE MANHOLE AT LEAST ONE 24" X 24" OPENING SHALL HAVE ACCESS TO THE MANHOLE AT ALL TIMES OF THE DAY OR NIGHT.
3. NOT ALL INSTALLATIONS WILL REQUIRE THE ALUMINUM PLATFORM. EMPLOYEE AND FLUME DETAILS APPLICABLE TO BE PROVIDED BY THE MONITORING FIRM UNDER CONTRACT TO THE DEPARTMENT OF WASTEWATER EFFLUENT SECTION, WATER QUALITY DIVISION THE EACH MONITORING EVENT.
4. A PERMANENT FLUME OR ISCO'S PORTABLE FLUME SHALL BE FURNISHED AND INSTALLED BY CONTRACTOR WITH THE INSTALLATION OF THE MANHOLE. CONTRACTOR SHALL NOTIFY THE DEPARTMENT OF WASTEWATER EFFLUENT SECTION, WATER QUALITY DIVISION TWO WEEKS PRIOR TO INSTALLATION. CONTRACTOR SHALL COORDINATE WITH THE DEPARTMENT OF WASTEWATER EFFLUENT SECTION, WATER QUALITY DIVISION THE EACH MONITORING EVENT.
5. IN ORDER TO CONTROL VELOCITIES AT A LEVEL THAT ALLOWS FOR ACCURATE FLOW MEASUREMENT BY THE FLUME, THE FLUME MUST BE SIZED TO ACCOMMODATE A MINIMUM OF 0.5 FT. AND A MAXIMUM OF 2.5 FT. OF HEAD AT THE DESIGN FLOW. THE FLUME SHALL BE SIZED TO ACCOMMODATE THE LARGEST EXPECTED FLOW, WHICH LIKELY MUST BE DESIGNED TO CONVEY THE MAXIMUM DESIGN FLOWS WITHOUT CREATING A SUBSTANTIAL OBSTRUCTION TO THE FLUME.

CONSTRUCTION NOTES

A. ALL MANHOLE BASES, MAIN SECTIONS AND FLAT SLAB TOP SECTIONS SHALL BE PRECAST REINFORCED CONCRETE IN ACCORDANCE WITH CITY SPECIFICATIONS.
B. FLUME & COVER FOR NON-STATIC (FREE FLOW) SITE SHALL BE HERRING-BONE OR SQ. FOR CHANNEL OR PIPING SHOWN. 6" SHALL BE LEVELED WITH CONCRETE.
C. CONCRETE PIPE SUPPORTS SHALL EXTEND OUTSIDE OF MANHOLE TO BELL OF FIRST JOINT & SHALL CRADLE PIPE TO SPRING LINE. NOT APPLICABLE FLEXIBLE PIPE.
D. PENETRATIONS INTO MANHOLE SHALL BE FLUSH TO 2" MAX., MEASURED AT SPRING LINE OF PIPE.
E. PRECAST CONCRETE COVER
F. CONCRETE BASE TO BE POURED IN PLACE USING NO. 4 BARS AT 6" O.C. EA. WAY FOR M.H. DEPTH OF 16' OR GREATER. NO 4 BARS AT 12" O.C. EA. WAY FOR M.H. LESS THAN 16' IN DEPTH.
G. 6" GROUT FILLET ON UPPER HALF OF PIPE AND AROUND BASE.
H. CONCRETE FILL 3000 PSI
I. SLOPE PER TABLE 1.

NOTE:
Outlet pipe is at a lower elevation than the inlet pipe. Minimum elevation difference is determined by the flume size.

NOT TO SCALE

SANITARY SEWER SAMPLING & METERING MANHOLE DETAIL (6x8 RECTANGULAR)/DWG # IP-2

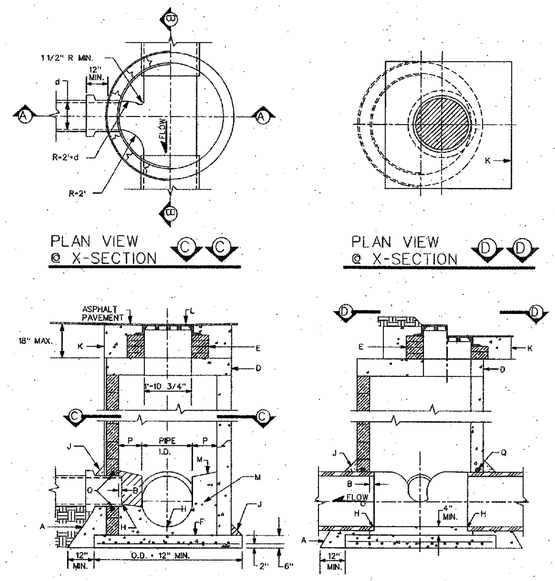

GENERAL NOTES

1. USE APPROVED MASTIC JOINT MATERIAL FOR ALL JOINTS.
2. CONTRACTOR HAS OPTION TO CONSTRUCT TYPE "C" M.H. IN LIEU OF TYPE "E" M.H. FOR DEPTHS OF 8' OR MORE.
3. DESIGN APPLIES TO 4', 6' & 8' MANHOLES.
4. M.H. GREATER THAN 16' IN DEPTH SHALL ONLY BE CONSTRUCTED OF PRECAST CONCRETE SECTION.
5. USE NON-SHRINK GROUT FOR FILLETS AND PENETRATIONS.
6. POSITION M.H. OPENING OVER THE UPSTREAM SIDE OF MAIN LINE.

CONSTRUCTION NOTES

A. CONCRETE PIPE SUPPORT SHALL EXTEND OUTSIDE OF M.H. TO BELL OF FIRST JOINT & SHALL CRADLE PIPE TO SPRING LINE. NOT APPLICABLE FLEXIBLE PIPE.
B. PIPE PENETRATION INTO MANHOLE SHALL BE FLUSH TO 2" MAX., MEASURED AT SPRING LINE OF PIPE.
D. PRECAST CONCRETE COVER
E. USE MAX. 4 COURSES GR. MS BRICK ON UNPAVED STREET FOR FUTURE ADJ. OF M.H. FRAME TO PAVEMENT GRADE. PLASTER INSIDE WITH 1/2" MORTAR.
F. CONCRETE BASE TO BE POURED IN PLACE USING NO. 4 BARS AT 6" O.C. EA. WAY FOR M.H. DEPTH OF 16' OR GREATER. NO 4 BARS AT 12" O.C. EA. WAY FOR M.H. LESS THAN 16' IN DEPTH.
H. INV. ELEV. OF STUB OR LATERAL AS SHOWN ON PLANS.
J. 6" GROUT FILLET ON UPPER HALF OF PIPE AND AROUND BASE.
K. USE A 5'x 5' CONCRETE PAD IN ALL AREAS. SLOPE FOR GRADER USE UNPAVED AREAS.
L. FRAME AND COVER, SEE DWG. # SAS-4
M. CONCRETE FILL 3000 PSI
N. SLOPE 1" PER FT. FROM PIPE CROWN
P. SHELF TO BE 9" WIDE MIN.
Q. APPROVED WATERSTOP TO BE COMPATIBLE WITH TYPE OF PIPE.

MANHOLE TYPE "C" DETAIL /DWG. # SAS-14

NOT TO SCALE

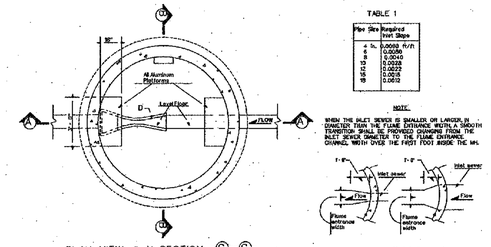

TABLE 1

Pipe Size	Required Inlet Slope
4 in	0.0060 ft/ft
6	0.0050
8	0.0040
10	0.0028
12	0.0022
15	0.0018
18	0.0012

NOTE

WHEN THE INLET SEWER IS SMALLER OR LARGER IN DIAMETER THAN THE FLUME ENTRANCE WIDTH, A SMOOTH TRANSITION SHALL BE PROVIDED CHANGING FROM THE INLET SEWER DIAMETER TO THE FLUME ENTRANCE CHANNEL WIDTH OVER THE FIRST FOOT INSIDE THE MH.

GENERAL NOTES

1. THIS DESIGN IS APPROPRIATE FOR MANHOLES 8.0 FT. & LESS IN DEPTH MEASURED FROM FLOWLINE CHANNEL INVERT ELEVATION TO TOP OF MANHOLE COVER. MANHOLES GREATER THAN 8.0 FT. SHALL BE DESIGNED BY A NEW MEXICO LICENSED PE/SE.
2. MONITORING MANHOLE SHALL BE LOCATED ON PRIVATE PROPERTY OUTSIDE OF CITY RIGHT-OF-WAY. 24" DIAMETER MANHOLE SHALL HAVE ACCESS TO THE MANHOLE AT ALL TIMES OF THE DAY OR NIGHT.
3. NOT ALL INSTALLATIONS WILL REQUIRE THE ALUMINUM PLATFORM. EMPLOYEE AND FLUME DETAILS APPLICABLE TO BE PROVIDED BY THE MONITORING FIRM UNDER CONTRACT TO THE DEPARTMENT OF WASTEWATER EFFLUENT SECTION, WATER QUALITY DIVISION THE EACH MONITORING EVENT.
4. A PERMANENT FLUME OR ISCO'S PORTABLE FLUME SHALL BE FURNISHED AND INSTALLED BY CONTRACTOR WITH THE INSTALLATION OF THE MANHOLE. CONTRACTOR SHALL NOTIFY THE DEPARTMENT OF WASTEWATER EFFLUENT SECTION, WATER QUALITY DIVISION TWO WEEKS PRIOR TO INSTALLATION. CONTRACTOR SHALL COORDINATE WITH THE DEPARTMENT OF WASTEWATER EFFLUENT SECTION, WATER QUALITY DIVISION THE EACH MONITORING EVENT.
5. IN ORDER TO CONTROL VELOCITIES AT A LEVEL THAT ALLOWS FOR ACCURATE FLOW MEASUREMENT BY THE FLUME, THE FLUME MUST BE SIZED TO ACCOMMODATE A MINIMUM OF 0.5 FT. AND A MAXIMUM OF 2.5 FT. OF HEAD AT THE DESIGN FLOW. THE FLUME SHALL BE SIZED TO ACCOMMODATE THE LARGEST EXPECTED FLOW, WHICH LIKELY MUST BE DESIGNED TO CONVEY THE MAXIMUM DESIGN FLOWS WITHOUT CREATING A SUBSTANTIAL OBSTRUCTION TO THE FLUME.

CONSTRUCTION NOTES

A. ALL MANHOLE BASES, MAIN SECTIONS AND FLAT SLAB TOP SECTIONS SHALL BE PRECAST REINFORCED CONCRETE IN ACCORDANCE WITH CITY SPECIFICATIONS.
B. FLUME & COVER FOR NON-STATIC (FREE FLOW) SITE SHALL BE HERRING-BONE OR SQ. FOR CHANNEL OR PIPING SHOWN. 6" SHALL BE LEVELED WITH CONCRETE.
C. CONCRETE PIPE SUPPORTS SHALL EXTEND OUTSIDE OF MANHOLE TO BELL OF FIRST JOINT & SHALL CRADLE PIPE TO SPRING LINE. NOT APPLICABLE FLEXIBLE PIPE.
D. PENETRATIONS INTO MANHOLE SHALL BE FLUSH TO 2" MAX., MEASURED AT SPRING LINE OF PIPE.
E. PRECAST CONCRETE COVER
F. CONCRETE BASE TO BE POURED IN PLACE USING NO. 4 BARS AT 6" O.C. EA. WAY FOR M.H. DEPTH OF 16' OR GREATER. NO 4 BARS AT 12" O.C. EA. WAY FOR M.H. LESS THAN 16' IN DEPTH.
G. 6" GROUT FILLET ON UPPER HALF OF PIPE AND AROUND BASE.
H. 6" DIAMETER AND SHORTER CONNECTION TO BE A NEW MEXICO PRODUCTION.
I. 2 IN. GRAVEL CRUSHED STONE LEVELING COURSE.
K. FLUME OUTLET END ADAPTOR/PLASTI-FAB OR APPROVED EQUAL
L. SLOPE PER TABLE 1.

NOTE:
Outlet pipe is at a lower elevation than the inlet pipe. Minimum elevation difference is determined by the flume size.

NOT TO SCALE

SANITARY SEWER SAMPLING & METERING MANHOLE DETAIL (8 FT. DIA.)/DWG. # IP-1

CONTRACT NO. DACA47-03-D-0012 TASK ORDER NO.3

CITY OF SANTA FE
WATER QUALITY DIVISION

TITLE: SANITARY SEWER STANDARD CONSTRUCTION DETAILS - D

DATE: JULY 1992	REVISIONS		FILE = D:\M\10\DWGS\SC014-4
DRAWN BY: G. CHAVEZ	8-4-97		
CADD REVISION BY: G. CHAVEZ			SHEET 6 OF 12
APPROVED BY: E. BROWN			

NO.	DESCRIPTION	DATE	BY
3			
2			
1			

REVISIONS (OR CHANGE NOTICES)

BRIAN JAMES ROMERO 13303 9-15-15 REGISTERED PROFESSIONAL ENGINEER

CITY OF SANTA FE

CERRILLOS ROAD PHASE IIC
CAMINO CARLOS REY TO
LLANO STREET
SANTA FE COUNTY

SANITARY SEWER STANDARD CONSTRUCTION DETAILS

SCALE
NOT TO SCALE

DESIGNED BY: PB	DRAWN BY: PB	CHECKED BY: JB
DATE: 08/07/15	DATE: 08/07/15	DATE: 08/07/15

J:\33693 Cerrillos Ph IIC\04 Engineering-33693\Plans\11_Sheets\21-24 MH Standards.dwg Sep 16, 2015 - 3:40pm Saved By: millernz

N.M. PROJECT NO. CN S100130 SHEET NO. 11–24

NOTES:

GENERAL

1. CONTRACTOR SHALL BE FAMILIAR WITH PLANS, DETAILS AND SPECIFICATIONS AS THEY PERTAIN TO THE SITE.

2. IT SHALL BE THE CONTRACTOR'S RESPONSIBILITY TO NOTIFY THE PROJECT MANAGER IF ANY ITEMS CONTAINED WITHIN THE SCOPE OF WORK DEFINED HEREIN ARE IN CONFLICT WITH THE PROPOSED WORK OF OTHER CONTRACTORS.

3. LANDSCAPE CONTRACTOR SHALL COORDINATE ALL WORK WITH PROJECT MANAGER AND OTHER CONTRACTORS.

4. EXISTING UTILITY LINES ARE TO BE BLUE STAKED PRIOR TO EXCAVATION FOR PLANT MATERIALS. CHECK AND FIELD VERIFY ALL SITE CONDITIONS, UTILITIES AND SERVICES PRIOR TO EXCAVATION. CALL N.M. ONE-CALL AT 260-1990 FOR BLUE STAKING. IF PROBLEMS ARE DISCOVERED, CONTACT PROJECT MANAGER TO DETERMINE A COURSE OF ACTION.

5. CONTRACTOR SHALL PROTECT NEWLY GRADED AREAS FROM TRAFFIC AND EROSION. KEEP AREAS FREE OF TRASH AND DEBRIS. REPAIR AND RE-ESTABLISH GRADES IN SETTLED, ERODED AND RUTTED AREAS AT THE CONCLUSION OF EACH PLANTING SEQUENCE OR AS DIRECTED BY THE PROJECT MANAGER.

6. REFERENCE ROADWAY, DRAINAGE, LIGHTING, SIGNAL, AND STRUCTURE PLACEMENT SECTIONS FOR GRADING AND OTHER APPLICABLE INFORMATION.

PROTECTION

1. PROTECTION OF PERSON AND PROPERTY: CONTRACTOR IS TO BARRICADE OPEN EXCAVATIONS OCCURRING AS PART OF THIS WORK AND POST WITH WARNING LIGHTS OR OTHER WARNING MEASURES AS NECESSARY. EXCAVATION BARRICADING SHALL BE CONSIDERED INCIDENTAL TO LANDSCAPE WORK.

2. PROTECT EXISTING STRUCTURES, UTILITIES, SIDEWALKS, PAVEMENTS AND OTHER FACILITIES FROM DAMAGE CAUSED BY SETTLEMENT, LATERAL MOVEMENT, UNDERMINING, WASHOUT AND OTHER HAZARDS CREATED BY LANDSCAPE WORK. CONTRACTOR SHALL REPLACE IN-KIND ANY DAMAGE TO SUCH DURING THE COURSE OF WORK.

3. CONTRACTOR SHALL BE RESPONSIBLE FOR THE PROTECTION OF ALL EXISTING PLANT MATERIALS ALONG AND OUTSIDE OF RIGHT-OF-WAY. CONTRACTOR SHALL REPLACE IN KIND ANY PLANT MATERIALS DAMAGED DURING THE COURSE OF WORK.

GRADING

1. FINISH GRADING SURFACE SHALL BE RAKED FREE OF EXTRANEOUS MATERIALS AND DEBRIS TO A SMOOTH AND EVEN TEXTURE. ALL EXTRANEOUS MATTER SHALL BE DISPOSED OF BY CONTRACTOR.

2. FINISH GRADING SHALL BE CONSIDERED INCIDENTAL TO PLANTING, IRRIGATION, AND OTHER RELATED LANDSCAPE WORK.

LANDSCAPE PLANTING

1. ALL LANDSCAPE PLANTING SHALL BE AS NOTED IN SPECIFICATIONS, AND AS NOTED HEREIN.

2. NO TREES SHALL BE INSTALLED WITHIN 6' FROM BACK OF CURB.

3. NO SHRUBS OR OTHER PLANT MATERIALS SHALL BE INSTALLED WITHIN 3' FROM BACK OF CURB.

4. PLANTING BACKFILL MIXTURE SHALL CONSIST OF CLEAN, NATIVE SOILS FROM PLANTING HOLE EXCAVATION.

NATIVE SOIL, 90 % BY VOLUME, SHALL CONSIST OF CLEAN, SOILS EXCAVATED FROM THE SITE OR IMPORTED. NATIVE SOILS CONSIST OF A SANDY CLAY LOAM IN COMPOSITION FREE FROM RUBBISH, ROCK, LARGE STONES, BRUSH, SOD, FROZEN MATERIAL OR OTHER UNSUITABLE SUBSTANCE THAT IS DETRIMENTAL TO PLANT GROWTH.

ORGANIC MATTER, 10 % BY VOLUME OF COMPOST MATERIAL SPECIFIED AS FOLLOWS: COMPOST, OR MULCH, SHALL BE A COMBINATION ORGANIC CARBON SOURCES SUCH AS STRAW, HAY, BARK, SAWDUST OR WOOD SHAVINGS AND NITROGEN SOURCES SUCH AS MANURE, BLOOD MEAL, OR CHEMICAL FERTILIZERS. NITROGEN SOURCES MUST BE ADDED PRIOR TO COMPOSTING. IT IS RECOMMENDED THIS MIXTURE BE AEROBICALLY COMPOSTED AT TEMPERATURES BETWEEN 120 F AND 160 F FOR A PERIOD OF NOT LESS THAN 100 DAYS. WEED SEEDS ARE TO BE DESTROYED DURING COMPOSTING AND UREA AND AMMONIA FORM NITROGEN ARE TO BE MINIMIZED. FINISHED COMPOST IS TO BE SCREENED TO PROVIDE LESS THAN 2 % REMAINING ON A 1/2" SCREEN. PLANTING BACKFILL MIXTURE SHALL BE CONSIDERED INCIDENTAL TO PLANTING WORK.

5. IMPORTED SOIL CRITERIA. IMPORTED SOILS SUBSTITUTED WHEN ADEQUATE QUANTITIES OF NATIVE SOILS ARE NOT AVAILABLE, SHALL BE OF A SIMILAR SOIL COMPOSITION TO NATIVE SOILS AND TESTED AS SPECIFIED IN CRITERIA LISTED BELOW:

SAMPLES OF THE SOIL SHALL BE TESTED FOR GRADATION, ATTERBERG LIMITS, CHEMICAL COMPOSITION, PH LEVELS, AND ORGANIC CONTENT. THE PROPOSED IMPORTED SOILS SHALL MATCH +5% ALL TESTING REQUIREMENTS SPECIFIED HEREIN.

6. MULCH ALL TREE WATER BASINS AND SHRUB PLANTING BED AREAS AS NOTED ON PLANS. IF NOT NOTED ON PLANS 3" BARK MULCH SHOULD BE APPLIED.

7. TREES TO BE INSTALLED A MINIMUM OF 10' FROM LIGHT STANDARDS, (TYP.) AND A MINIMUM OF 15' FROM HYDRANTS AND 6' FROM CURB.

IRRIGATION

1. THE IRRIGATION SYSTEM IS DESIGNED FOR AN OPERATING PRESSURE OF 50 PSI AT THE HEAD. CONTRACTOR SHALL FIELD VERIFY PRESSURE PRIOR TO INITIATION OF CONSTRUCTION. THIS INFORMATION SHALL BE PROVIDED TO THE LANDSCAPE ARCHITECT AND PROJECT MANAGER FOR APPROVAL, PRIOR TO PROCEEDING. IF STATIC PRESSURE IS GREATER THAN 100 PSI, A MAINLINE PRESSURE REDUCING VALVE WILL BE REQUIRED.

2. COMPLY WITH REQUIREMENTS OF THE SPECIFICATIONS FOR NMDOT, CITY OF SANTA FE PUBLIC WORKS CONSTRUCTION, THE UNIFORM PLUMBING CODE, AND ANY OTHER GOVERNMENTAL BODIES HAVING JURISDICTION.

3. WHERE TREES, LIGHT STANDARDS, ETC. ARE AN OBSTRUCTION OF PIPING AND BUBBLER HEADS, THE HEADS AND PIPING SHALL BE ADJUSTED AND/OR RELOCATED AS NECESSARY TO OBTAIN FULL COVERAGE WITHOUT EXCESSIVE WATER WASTE.

4. PLANS ARE DIAGRAMMATIC AND APPROXIMATE DUE TO SCALE OF DRAWINGS. ALL VALVES SHALL BE LOCATED IN PLANTING AREAS WHERE SHOWN AND ALL PIPING SHALL BE INSTALLED PRIOR TO LANDSCAPING OR PAVING WORK. NO TEES, ELLS OR OTHER TURNS IN PIPING SHALL BE LOCATED UNDER PAVING. ALL WORK SHALL BE PERFORMED WITHIN THE PUBLIC RIGHT-OF-WAY.

5. TRENCHES SHALL BE BACKFILLED AS PER SPECIFICATIONS. ANY REQUIRED ADDITIONAL BACKFILL MATERIAL (AS PER SPECIFICATIONS) SHALL BE CONSIDERED INCIDENTAL TO IRRIGATION WORK.

6. ALL VALVES TO BE IN APPROVED VALVE BOXES. LOCATE VALVE BOXES IN GROUPS AS PER PLANS, IN PLANTING AREAS NEAR WALKWAYS.

7. THE CONTRACTOR SHALL BE LIABLE FOR ANY LOSS OR DAMAGE TO ANY WORK OR MATERIALS, SUPPLIES AND EQUIPMENT ON THE JOB SITE CAUSED BY THE CONTRACTOR, ITS EMPLOYEES OR ANY OTHER UNFORESEEN CAUSE UNTIL FINAL ACCEPTANCE OF PROJECT WITH THE PROJECT MANAGER.

8. IF THE CONTRACT DRAWINGS AND/OR SPECIFICATIONS DO NOT THOROUGHLY DESCRIBE THE METHOD OR TECHNIQUES TO BE USED FOR INSTALLATION, THEN THE CONTRACTOR SHALL FOLLOW THE INSTALLATION METHODS RECOMMENDED BY THE MANUFACTURER UNLESS OTHERWISE DIRECTED BY PROJECT MANAGER.

9. TRENCHING ADJACENT TO EXISTING TREES - CONTRACTOR SHALL NOT TRENCH WITHIN 6' OF THE TRUNK AND SHALL AVOID TRENCHING UNDER THE DRIPLINE OF EXISTING TREES. NO TREE ROOTS LARGER THAN 3" IN DIAMETER SHALL BE CUT.

10. PROTECT RPA FROM FREEZING WITH HEAT TAPE AS PER DETAILS.

11. CONTRACTOR SHALL BE RESPONSIBLE FOR PROVIDING, COORDINATING, INSTALLING ALL ELECTRICAL AND ELECTRICAL SUPPLIES NECESSARY FOR THE INSTALLATION AND OPERATION OF THE IRRIGATION SYSTEM SPECIFIED.

12. CONTRACTOR SHALL INSTALL ELECTRICAL WORK IN COMPLIANCE WITH ALL APPLICABLE CODES, ORDINANCES AND REQUIREMENTS OF THE CITY OF SANTA FE, AND ALL OTHER GOVERNING BODIES HAVING JURISDICTION.

13. CONTRACTOR SHALL NOTIFY PNM 30 DAYS PRIOR TO ANTICIPATED POWER SERVICE CONNECTIONS. THE CONTRACTOR SHALL COORDINATE WITH PNM TO CONTINUE ELECTRICAL SERVICE IN CITY OF SANTA FE'S ELECTRICAL SERVICE AND THIS WORK SHALL BE CONSIDERED INCIDENTAL TO LANDSCAPE CONSTRUCTION.

14. ALL IRRIGATION LINES SHOWN OUTSIDE OF LANDSCAPE AREAS ARE SHOWN FOR GRAPHIC CLARITY ONLY. ALL LINES SHOULD BE PLACED IN LANDSCAPE AREAS WITHIN THE RIGHT OF WAY UNLESS OTHERWISE NOTED.

SUMMARY OF QUANTITIES

ITEM #	DESCRIPTION	UNIT	EST. QUAN.	UNIT COST
664000	**LANDSCAPING COMPLETE**			
	PLANTING			
1	ACER GRANDIDENTATUM (BIGTOOTH MAPLE) 2" CAL	EA.	7	$450.00
2	FORESTIERA NEOMEXICANA (NM OLIVE) 15 GAL	EA.	22	$45.00
3	PINUS EDULIS (PINON PINE) 6'-8' HT.	EA.	6	$800.00
4	QUERCUS MUEHLENBERGII (CHINKAPIN OAK) 2" CAL	EA.	6	$450.00
5	RHUS LANCEOLATA (PRAIRIE FLAMELEAF SUMAC) 2"CAL	EA.	17	$450.00
6	ROBINIA XAMBIGUA (IDAHO LOCUST) 2" CAL	EA.	14	$450.00
7	ACHILLEA HYBRID MOONSHINE (MOONSHINE YARROW) 1 GAL.	EA.	36	$20.00
8	ARTEMISIA 'POWIS CASTLE' (ARTEMISIA) 1 GAL.	EA.	184	$20.00
9	FALLUGIA PARADOXA (APACHE PLUME) 5 GAL.	EA.	92	$45.00
10	HESPERALOE PARVIFLORA (YELLOW YUCCA) 5 GAL	EA.	218	$45.00
11	MUHLENBERGIA CAPILLARIS (REGAL MIST MUHLY) 1 GAL.	EA.	295	$20.00
12	RIBES AUREUM (GOLDEN CURRANT) 5 GAL.	EA.	101	$45.00
13	NOLINA MICROCARPA (BEARGRASS) 5 GAL.	EA.	93	$45.00
14	PENSTEMON PINIFOLIUS (PINE LEAF PENSTEMON) 1 GAL.	EA.	81	$20.00
	IRRIGATION			
15	IRRIGATION SYSTEM (COMPLETE IN PLACE)	L.S.	1	$125,000.00
	HARDSCAPE, GRAVEL, ROCK			
16	CONCRETE MOW STRIP	LF	16	$15.00
17	CRUSHER FINES	CU.YD.	900	$80.00
18	STABILIZED CRUSHER FINES (DRIVEWAY)	CU.YD.	3	$100.00
19	BASE COURSE (DRIVEWAY)	CU.YD.	3	$39.00
20	LANDSCAPE BOULDER	EA.	24	$350.00
	BUS STOPS			
21	PEDESTRIAN BUS PLAZA (COMPLETE IN PLACE)	EA.	3	$80,000.00
22	SMALL BUS STOP WITH BENCH (COMPLETE IN PLACE)	EA.	1	$4,000.00
	SITE FURNISHINGS			
23	LITTER RECEPTACLE	EA.	4	$1,300.00
	ELECTRICAL			
24	SERVICE RISER, INSTALLED	EA.	1	$850.00
25	METER PEDESTAL, INSTALLED	EA.	1	$3,600.00

NOTE TO CONTRACTOR: THE CONTRACTOR SHALL PROVIDE AN ITEMIZED COST BREAKDOWN FOR EACH OF THE ITEMS LISTED AND SHALL SUBMIT THESE COSTS TO THE PROJECT MANAGER AT THE PRE-CONSTRUCTION MEETING.

CITY OF SANTA FE	SHEET
NEW MEXICO PROJECT NO.	NO.
CN S100130	12-1

NO.	DESCRIPTION	DATE	BY
3			
2			
1			

REVISIONS (OR CHANGE NOTICES)

STATE OF NEW MEXICO — ROBERT W. ROBERDORFER — REGISTERED LANDSCAPE ARCHITECT

SCALE

CITY OF SANTA FE

CERRILLOS ROAD PHASE IIC
CAMINO CARLOS REY TO
LLANO STREET
SANTA FE COUNTY

LANDSCAPE NOTES AND QUANTITIES

DESIGNED BY: KV & GR	DRAWN BY: KV,RO,AB	CHECKED BY:RO & GR
DATE: 07/18/14	DATE: 08/12/15	DATE: 08/12/15

CITY OF SANTA FE	SHEET NO.
NEW MEXICO PROJECT NO.	
CN S100130	12-2

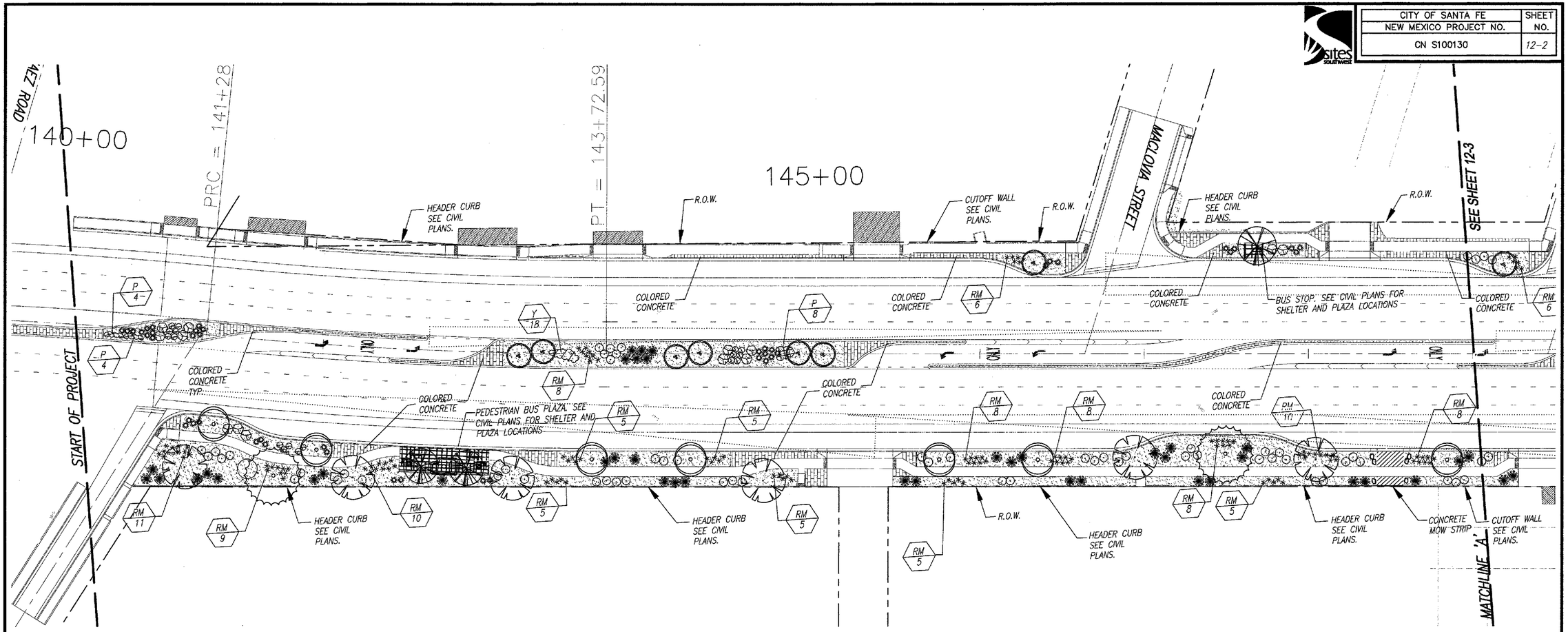

PLANT LEGEND

TREES AND SHRUBS SHALL BE PLANTED AS PER DETAILS SHEET 12-6.

Common Name	Botanical Name	Size	Quantity	Comment
Trees				
CHINKAPIN OAK	Quercus muehlenbergii	2" CAL	2	40' x 40'
IDAHO LOCUST	Robinia x ambigua	2" CAL	6	40' x 30'
BIGTOOTH MAPLE	Acer grandidentatum	2" CAL	3	25' x 25'
PINON PINE	Pinus edulis	6' -8' HT	(0)	30' x 20'
NEW MEXICO OLIVE	Forestiera neomexicana	15 GAL	7	15' x 15'
PRAIRIE FLAMELEAF SUMAC	Rhus lanceolata	2" CAL	7	25' x 25'
EXISTING TREE (TO REMAIN)				
Shrubs				
APACHE PLUME	Fallugia pardoxa	5 GAL.	13	6' x 6'
GOLDEN CURRANT	Ribes aureum	5 GAL.	17	6' x 6'
YELLOW YUCCA	Hesperaloe parviflora 'Yellow"	5 GAL.	44	3' x 3'
ARTEMISIA	Artemisia 'Powis Castle'	1 GAL.	55	3' x 2'
BEARGRASS	Nolina Microcarpa	5 GAL.	40	5' x 6'
REGAL MIST MUHLY (RM)	Muhlenbergia capillaris	1 GAL.	116	3'x3' 4' O.C.
MOONSHINE YARROW (Y)	Achillea x 'Moonshine'	1 GAL.	18	18"x24" 2' O.C.
PINELEAF PENSTEMON (P)	Penstemon pinifolius	1 GAL.	16	1'x2' 3' O.C.

(XX) 10 — MASSED PLANT TYPE / PLANT QUANTITY

MATERIALS LEGEND

- 4" DEPTH CRUSHER FINES (3/8" FINES) COLOR: SANTA FE BROWN OR EQUIVALENT, OVER "WEED ENDER" FABRIC (MFR. BY U-TECK) OR APPROVED EQUIVALENT
- BOULDER "MOSS ROCK" APPROX. 12-15 CU. FT., INSTALL AS PER DETAIL C/12-7
- COLORED CONCRETE PAVING, SEE DETAIL A/12-7
- 4" DEPTH STABILIZED CRUSHER FINES DRIVE PATH, COLOR: SANTA FE BROWN OVER 4" DEPTH COMPACTED BASE COURSE. SEE DETAIL H/12-7
- BUS STOP, SEE E/12-7 FOR DETAILS
- PEDESTRIAN BUS PLAZA, SEE SHEETS 12-16, 12-17.
- CONCRETE MOW STRIP. COLOR TO MATCH HEADER CURB IN CIVIL PLANS. SEE DETAIL F/12-7.
- CLEAR SIGHT TRIANGLE

NORTH

0 15 30 60

NO.	DESCRIPTION	DATE	BY
3			
2			
1			

REVISIONS (OR CHANGE NOTICES)

STATE OF NEW MEXICO — ROBERT M. DORFMEISTER — REGISTERED LANDSCAPE ARCHITECT

CITY OF SANTA FE

CERRILLOS ROAD PHASE IIC
CAMINO CARLOS REY TO
LLANO STREET
SANTA FE COUNTY

LANDSCAPE PLANS

SCALE 1" = 30'

DESIGNED BY: KV & GR	DRAWN BY: KV,RO,AB	CHECKED BY:RO & GR
DATE: 07/18/14	DATE: 08/12/15	DATE: 08/12/15

P:\2014050_CerrillosRdPhII\4. Drawings\CAD Drawings\100pct REV-Aug 2015\PLT.dwg Oct 12, 2015 - 4:32pm Saved By: roberdorfer

N.M. PROJECT NO. CN S100130 SHEET NO. 12-2

CITY OF SANTA FE	SHEET
NEW MEXICO PROJECT NO.	NO.
CN S100130	12-3

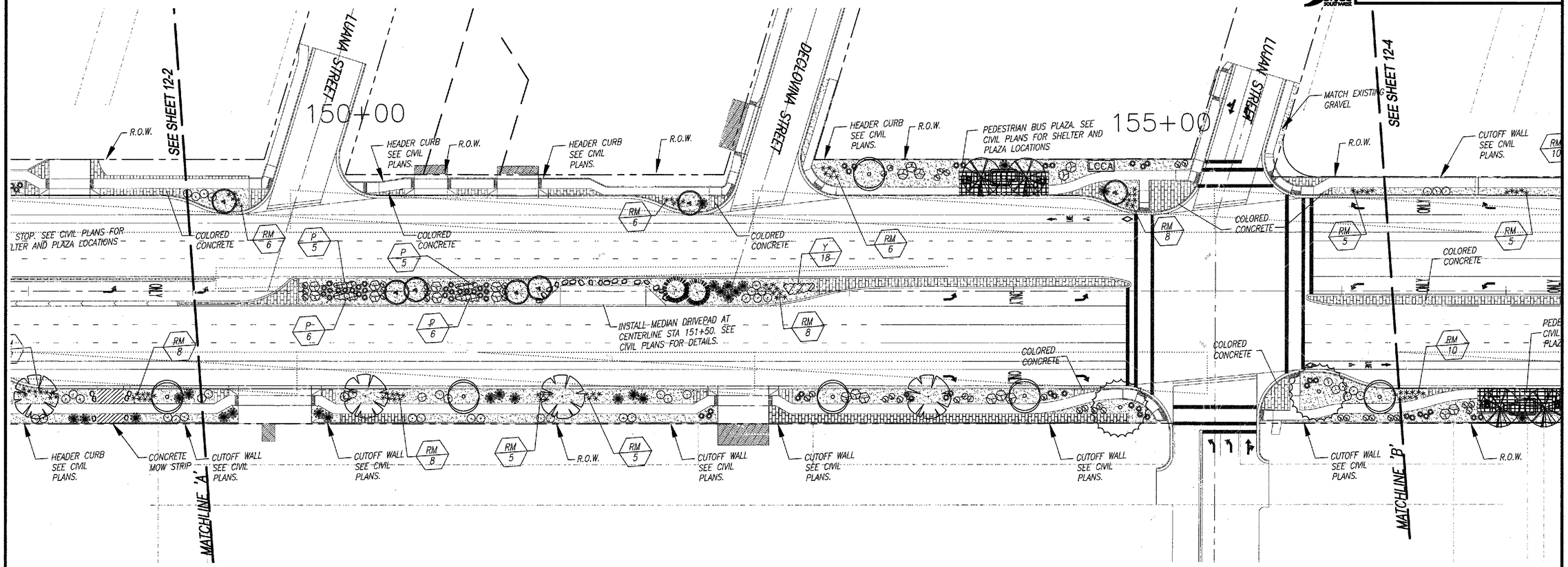

PLANT LEGEND

TREES AND SHRUBS SHALL BE PLANTED AS PER DETAILS SHEET 12-6.

Trees	Common Name	Botanical Name	Size	Quantity	Comment
	CHINKAPIN OAK	Quercus muehlenbergii	2" CAL	2	60' x 50'
	IDAHO LOCUST	Robinia x ambigua	2" CAL	3	40' x 30'
	BIGTOOTH MAPLE	Acer grandidentatum	2" CAL	2	25' x 25'
	PINON PINE	Pinus edulis	6' -8' HT	2	30' x 20'
	NEW MEXICO OLIVE	Forestiera neomexicana	15 GAL	7	18' x 15'
	PRAIRIE FLAMELEAF SUMAC	Rhus lanceolata	2" CAL	5	25' x 25'
	EXISTING TREE (TO REMAIN)				

Shrubs	Common Name	Botanical Name	Size	Quantity	Comment
	APACHE PLUME	Fallugia pardoxa	5 GAL.	19	6' x 6'
	GOLDEN CURRANT	Ribes aureum	5 GAL.	39	8' x 3'
	YELLOW YUCCA	Hesperaloe parviflora 'Yellow'	5 GAL.	55	3' x 3'
	ARTEMISIA	Artemisia 'Powis Castle'	1 GAL.	34	10' x 5'
	BEARGRASS	Nolina Microcarpa	5 GAL.	19	5' x 6'
	REGAL MIST MUHLY (RM)	Muhlenbergia capillaris	1 GAL.	58	3'x3' 4' O.C.
	MOONSHINE YARROW (Y)	Achillea x 'Moonshine'	1 GAL.	18	18"x24" 2' O.C.
	PINELEAF PENSTEMON (P)	Penstemon pinifolius	1 GAL.	22	1'x2' 3' O.C.

(XX) / 10 — MASSED PLANT TYPE / PLANT QUANTITY

MATERIALS LEGEND

- 4" DEPTH CRUSHER FINES (⅜" FINES) COLOR: SANTA FE BROWN OR EQUIVALENT, OVER "WEED ENDER" FABRIC (MFR. BY U-TECK) OR APPROVED EQUIVALENT
- BOULDER "MOSS ROCK" APPROX. 12-15 CU. FT., INSTALL AS PER DETAIL C/12-7
- COLORED CONCRETE PAVING, SEE DETAIL A/12-7
- 4" DEPTH STABILIZED CRUSHER FINES DRIVE PATH, COLOR: SANTA FE BROWN OVER 4" DEPTH COMPACTED BASE COURSE. SEE DETAIL H/12-7
- BUS STOP, SEE E/12-7 FOR DETAILS
- PEDESTRIAN BUS PLAZA, SEE SHEETS 12-16, 12-17.
- CONCRETE MOW STRIP. COLOR TO MATCH HEADER CURB IN CIVIL PLANS. SEE DETAIL F/12-7.
- CLEAR SIGHT TRIANGLE

NORTH

0 15 30 60

SCALE 1" = 30'

NO.	DESCRIPTION	DATE	BY
3			
2			
1			

REVISIONS (OR CHANGE NOTICES)

CITY OF SANTA FE

CERRILLOS ROAD PHASE IIC
CAMINO CARLOS REY TO
LLANO STREET
SANTA FE COUNTY

LANDSCAPE PLANS

DESIGNED BY: KV & GR	DRAWN BY: KV,RO,AB	CHECKED BY:RO & GR
DATE: 07/18/14	DATE: 08/12/15	DATE: 08/12/15

P:\2014050_CerrillosRdPhII\4. Drawings\CAD Drawings\100pct REV-Aug 2015\PLT.dwg Oct 12, 2015 - 4:33pm Saved By: roberdorfer

N.M. PROJECT NO. CN S100130 SHEET NO. 12-3

CITY OF SANTA FE	SHEET
NEW MEXICO PROJECT NO.	NO.
CN S100130	12-4

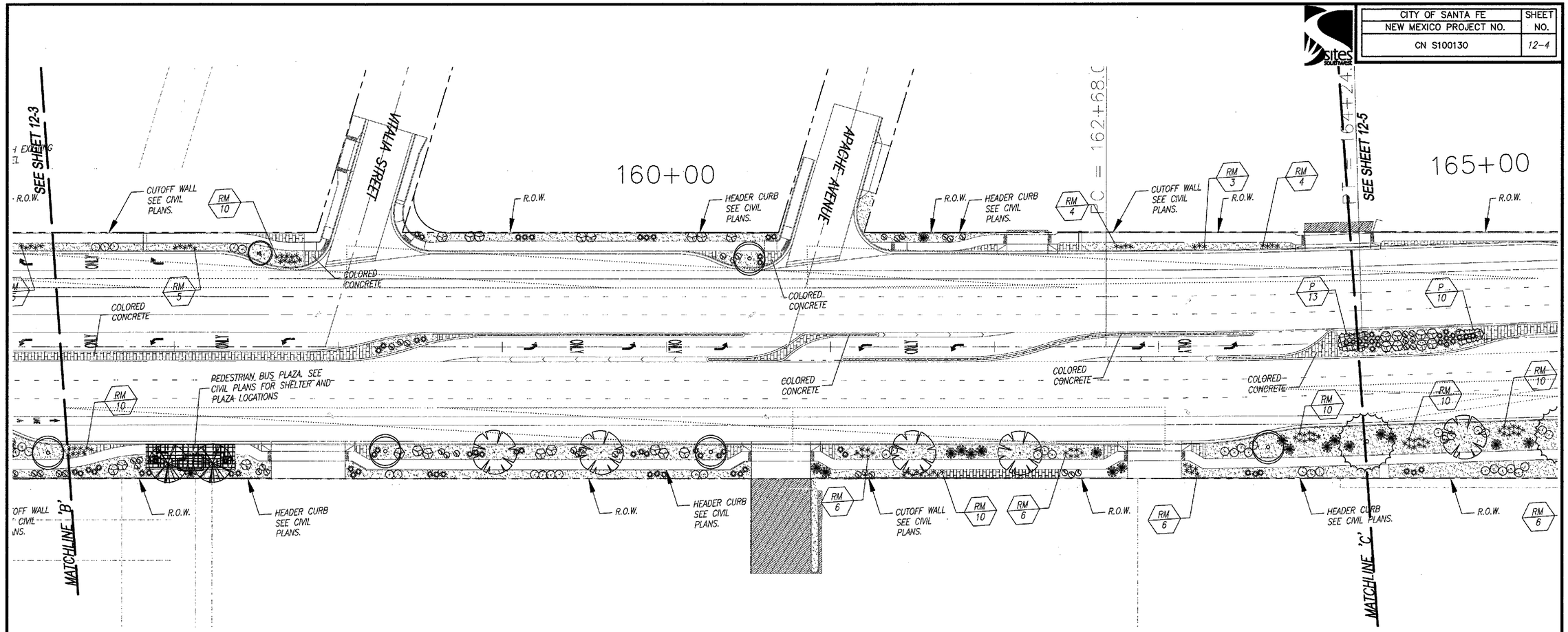

PLANT LEGEND

TREES AND SHRUBS SHALL BE PLANTED AS PER DETAILS SHEET 12-6.

Trees	Common Name	Botanical Name	Size	Quantity	Comment
	CHINKAPIN OAK	Quercus muehlenbergii	2" CAL	(0)	60' x 50'
	IDAHO LOCUST	Robinia x ambigua	2" CAL	4	40' x 30'
	BIGTOOTH MAPLE	Acer grandidentatum	2" CAL	2	25' x 25'
	PINON PINE	Pinus edulis	6' -8' HT	(0)	30' x 20'
	NEW MEXICO OLIVE	Forestiera neomexicana	15 GAL	1	18' x 15'
	PRAIRIE FLAMELEAF SUMAC	Rhus lanceolata	2" CAL	4	25' x 25'
	EXISTING TREE (TO REMAIN)				

Shrubs	Common Name	Botanical Name	Size	Quantity	Comment
	APACHE PLUME	Fallugia pardoxa	5 GAL.	19	6' x 6'
	GOLDEN CURRANT	Ribes aureum	5 GAL.	32	8' x 3'
	YELLOW YUCCA	Hesperaloe parviflora 'Yellow"	5 GAL.	58	3' x 3'
	ARTEMISIA	Artemisia 'Powis Castle'	1 GAL.	26	10' x 5'
	BEARGRASS	Nolina Microcarpa	5 GAL.	16	5' x 6'
	REGAL MIST MUHLY (RM)	Muhlenbergia capillaris	1 GAL.	73	3'x3' 4' O.C.
	MOONSHINE YARROW (Y)	Achillea x 'Moonshine'	1 GAL.	(0)	18"x24" 2' O.C.
	PINELEAF PENSTEMON (P)	Penstemon pinifolius	1 GAL.	13	1'x2' 3' O.C.

(XX) / 10 — MASSED PLANT TYPE / PLANT QUANTITY

MATERIALS LEGEND

- 4" DEPTH CRUSHER FINES (3/8" FINES) COLOR: SANTA FE BROWN OR EQUIVALENT, OVER "WEED ENDER" FABRIC (MFR. BY U-TECK) OR APPROVED EQUIVALENT
- BOULDER "MOSS ROCK" APPROX. 12-15 CU. FT., INSTALL AS PER DETAIL C/12-7
- COLORED CONCRETE PAVING, SEE DETAIL A/12-7
- 4" DEPTH STABILIZED CRUSHER FINES DRIVE PATH, COLOR: SANTA FE BROWN OVER 4" DEPTH COMPACTED BASE COURSE. SEE DETAIL H/12-7
- BUS STOP, SEE E/12-7 FOR DETAILS
- PEDESTRIAN BUS PLAZA, SEE SHEETS 12-16, 12-17.
- CONCRETE MOW STRIP. COLOR TO MATCH HEADER CURB IN CIVIL PLANS. SEE DETAIL F/12-7.
- CLEAR SIGHT TRIANGLE

NORTH

0 15 30 60

SCALE 1" = 30'

NO.	DESCRIPTION	DATE	BY
3			
2			
1			

REVISIONS (OR CHANGE NOTICES)

DESIGNED BY: KV & GR	DRAWN BY: KV,RO,AB	CHECKED BY:RO & GR
DATE: 07/18/14	DATE: 08/12/15	DATE: 08/12/15

CITY OF SANTA FE

CERRILLOS ROAD PHASE IIC
CAMINO CARLOS REY TO
LLANO STREET
SANTA FE COUNTY

LANDSCAPE PLANS

STATE OF NEW MEXICO — REGISTERED LANDSCAPE ARCHITECT

P:\2014050_CerrillosRdPhII\4. Drawings\CAD Drawings\100pct REV-Aug 2015\PLT.dwg Oct 12, 2015 - 4:34pm Saved By: roberdorfer

N.M. PROJECT NO. CN S100130 SHEET NO. 12-4

CITY OF SANTA FE	SHEET NO.
NEW MEXICO PROJECT NO.	
CN S100130	12-5

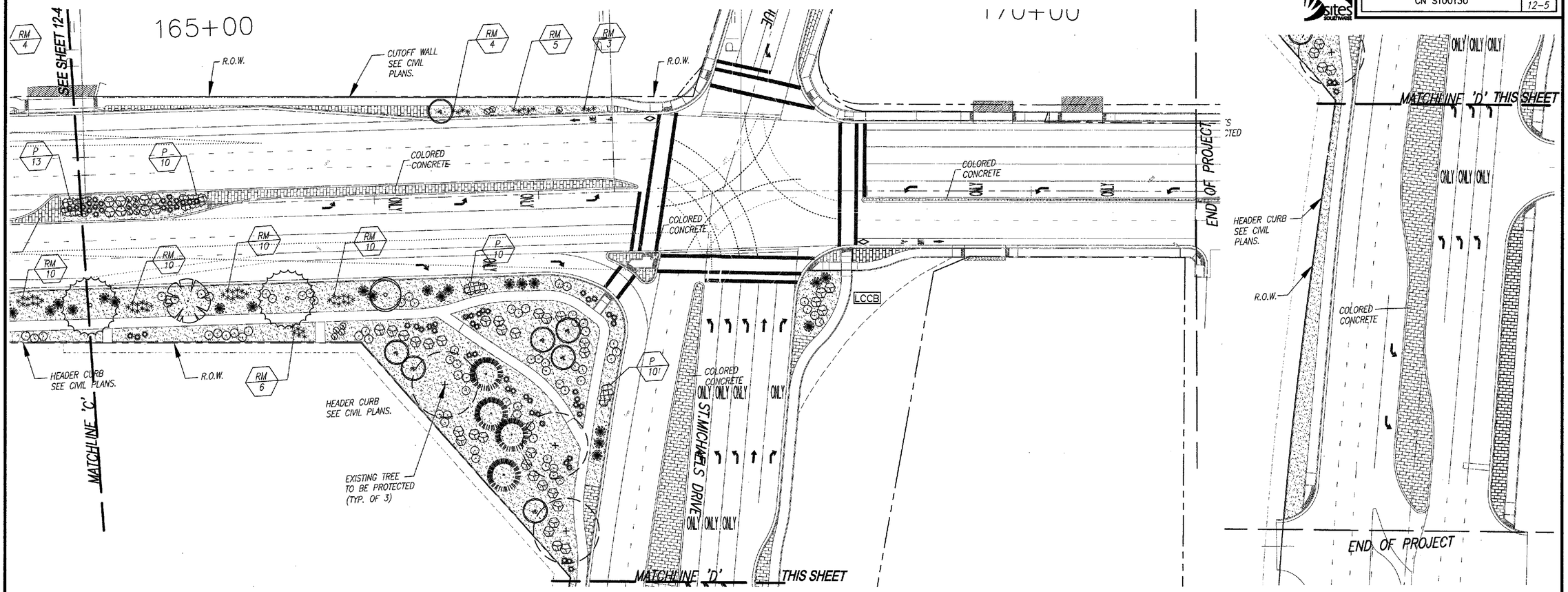

PLANT LEGEND

TREES AND SHRUBS SHALL BE PLANTED AS PER DETAILS SHEET 12-6.

Trees	Common Name	Botanical Name	Size	Quantity	Comment
	CHINKAPIN OAK	Quercus muehlenbergii	2" CAL	2	60' x 50'
	IDAHO LOCUST	Robinia x ambigua	2" CAL	1	40' x 30'
	BIGTOOTH MAPLE	Acer grandidentatum	2" CAL	(0)	25' x 25'
	PINON PINE	Pinus edulis	6' -8' HT	4	30' x 20'
	NEW MEXICO OLIVE	Forestiera neomexicana	15 GAL	7	18' x 15'
	PRAIRIE FLAMELEAF SUMAC	Rhus lanceolata	2" CAL	1	25' x 25'
	EXISTING TREE (TO REMAIN)				

Shrubs	Common Name	Botanical Name	Size	Quantity	Comment
	APACHE PLUME	Fallugia pardoxa	5 GAL.	41	6' x 6'
	GOLDEN CURRANT	Ribes aureum	5 GAL.	13	8' x 3'
	YELLOW YUCCA	Hesperaloe parviflora 'Yellow"	5 GAL.	61	3' x 3'
	ARTEMISIA	Artemisia 'Powis Castle'	1 GAL.	69	10' x 5'
	BEARGRASS	Nolina Microcarpa	5 GAL.	18	5' x 6'
	REGAL MIST MUHLY (RM)	Muhlenbergia capillaris	1 GAL.	48	3'x3' 4' O.C.
	MOONSHINE YARROW (Y)	Achillea x 'Moonshine'	1 GAL.	(0)	18"x24" 2' O.C.
	PINELEAF PENSTEMON (P)	Penstemon pinifolius	1 GAL.	30	1'x2' 3' O.C.

(XX) 10 — MASSED PLANT TYPE / PLANT QUANTITY

MATERIALS LEGEND

- 4" DEPTH CRUSHER FINES (3/8" FINES) COLOR: SANTA FE BROWN OR EQUIVALENT, OVER "WEED ENDER" FABRIC (MFR. BY U-TECK) OR APPROVED EQUIVALENT
- BOULDER "MOSS ROCK" APPROX. 12-15 CU. FT., INSTALL AS PER DETAIL C/12-7
- COLORED CONCRETE PAVING, SEE DETAIL A/12-7
- 4" DEPTH STABILIZED CRUSHER FINES DRIVE PATH, COLOR: SANTA FE BROWN OVER 4" DEPTH COMPACTED BASE COURSE. SEE DETAIL H/12-7
- BUS STOP, SEE E/12-7 FOR DETAILS
- PEDESTRIAN BUS PLAZA, SEE SHEETS 12-16, 12-17.
- CONCRETE MOW STRIP. COLOR TO MATCH HEADER CURB IN CIVIL PLANS. SEE DETAIL F/12-7.
- CLEAR SIGHT TRIANGLE

NORTH

NO.	DESCRIPTION	DATE	BY
3			
2			
1			

REVISIONS (OR CHANGE NOTICES)

STATE OF NEW MEXICO — ROBERT M. OLDENDORFER — REGISTERED LANDSCAPE ARCHITECT

SCALE 1" = 30'

0 15 30 60

DESIGNED BY: KV & GR	DRAWN BY: KV,RO,AB	CHECKED BY:RO & GR
DATE: 07/18/14	DATE: 08/12/15	DATE: 08/12/15

CITY OF SANTA FE

CERRILLOS ROAD PHASE IIC
CAMINO CARLOS REY TO
LLANO STREET
SANTA FE COUNTY

LANDSCAPE PLANS

P:\2014050_CerrillosRdPhII\4. Drawings\CAD Drawings\100pct REV-Aug 2015\PLT.dwg Oct 12, 2015 - 4:35pm Saved By: roberdorfer

N.M. PROJECT NO. CN S100130 SHEET NO. 12-5

CITY OF SANTA FE	SHEET
NEW MEXICO PROJECT NO.	NO.
CN S100130	12-6

CONSTRUCTION NOTES:

A. MULCH SHALL BE HELD BACK 2" FROM TREE TRUNK.
B. TREE LOCATION AND SPECIES AS PER PLAN.
C. REMOVE EXISTING SOIL (FROM NURSERY) AS NEEDED TO EXPOSE ROOT FLARE. INSTALL WITH ROOT FLARE 1"-2" ABOVE GRADE.
D. 4" DEPTH CRUSHER FINES THROUGHOUT PLANTING EXCEPT 2" GAP AT TRUNK.
E. PLACE TREE IN HOLE TO STRAIGHTEN. REMOVE WIRE BASKET, WOOD BOX, PLASTIC, TWINE, AND/OR ROPE PRIOR TO BACKFILL. REMOVE ALL BURLAP.
F. BACKFILL WITH 1/4 PART (BY VOLUME) COMPOST (FROM CITY OF SANTA FE, R-QUBED ENERGY, SCI, OR APPROVED EQUIVALENT) AND 3/4 PART (BY VOLUME) EXISTING CLEAN SOIL. THOROUGHLY MIX BACKFILL PRIOR TO INSTALLATION.
G. UNDISTURBED NATIVE SOIL.
H. 4" DEPTH WATER RETENTION BASIN AT EXCAVATION LIMIT.
I. ROOT FLARE

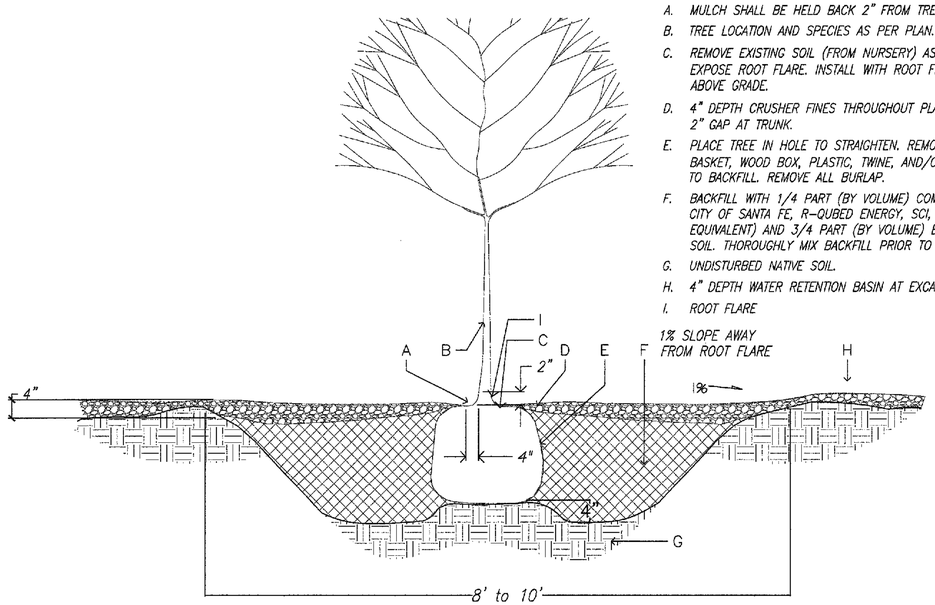

A TREE PLANTING

NOT TO SCALE

GENERAL NOTES:

1. EXISTING SOIL WITHIN THE PLANTING BED SHALL BE REMOVED TO A DEPTH EQUAL TO ROOTBALL DEPTH AND BACKFILLED WITH THE SPECIFIED PLANTING SOIL MIXTURE.
2. IF DISTURBED, COMPACT SOIL BELOW ROOTBALL PRIOR TO PLANTING TO PREVENT TREE FROM SETTLING.
3. PRIOR TO BACKFILLING TREE, ALL WIRE, ROPE, AND SYNTHETIC MATERIALS SHALL BE REMOVED FROM THE TREE AND THE PLANTING PIT.
4. PRIOR TO BACKFILLING, BURLAP SHALL BE CUT AWAY FROM THE TOP AND SIDES OF ROOTBALL.

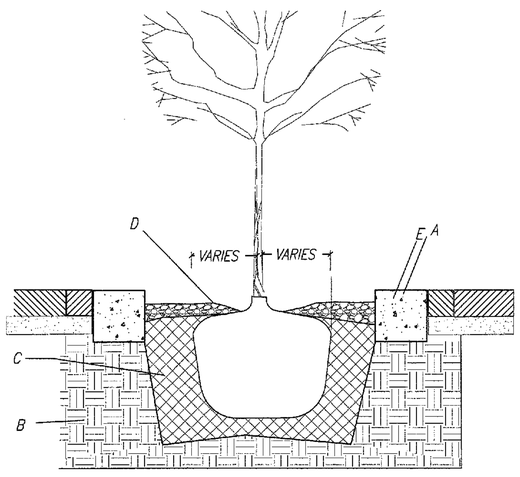

CONSTRUCTION NOTES:

A. COLORED CONCRETE- AS PER PLANS AND DETAILS
B. EXISTING SUBGRADE
C. BACKFILL WITH 1/4 PART (BY VOLUME) COMPOST (FROM CITY OF SANTA FE, R-QUBED ENERGY, SCI, OR APPROVED EQUIVALENT) AND 3/4 PART (BY VOLUME) EXISTING CLEAN SOIL. THOROUGHLY MIX BACKFILL PRIOR TO INSTALLATION.
D. 4" CRUSHER FINES MULCH OVER FILTER FABRIC
E. 6" CONCRETE CURB- SEE DETAIL B/12-7

D TREE PLANTING AT COLORED CONCRETE PAVING DETAIL

NOT TO SCALE

CONSTRUCTION NOTES:

A. TREE.
B. BACKFILL WITH EXISTING SOIL.
C. 4" DEPTH OF MULCH.
D. 4" SPACE BETWEEN MULCH AND TREE.
E. FINISH GRADE.
F. 1:1 SLOPE ON SIDES OF PLANTING HOLE.
G. UNDISTURBED SOIL.

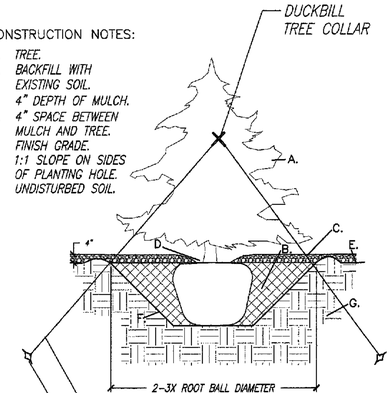

GENERAL NOTES:

1. KEEP SOIL BELOW ROOT BALL UNDISTURBED TO PREVENT TREE FROM SETTLING.
2. REMOVE ANY EXCESS SOIL FROM TOP OF ROOTBALL TO EXPOSE ROOT FLARE (WHERE TOP MOST ROOT EMERGES FROM THE TRUNK). PLANT WITH ROOT FLARE LEVEL TO FINISH GRADE (OR 1"-2" HIGHER IN SLOWLY DRAINING SOIL).
3. TAMP SOIL FIRMLY AROUND BASE OF ROOTBALL WITH FOOT PRESSURE.
4. PRIOR TO BACKFILLING, REMOVE BURLAP, ROPE, TWINE, AND WIRE FROM TOP HALF OF ROOTBALL AND FROM PLANTING HOLE.
5. AT TIME OF PLANTING, ONLY PRUNE CO-DOMINANT LEADERS (DOES NOT APPLY TO MULTI-TRUNK SPECIMENS), CROSSOVER LIMBS, AND DEAD OR BROKEN BRANCHES.
6. STAKE TREES ONLY UPON THE APPROVAL OF THE LANDSCAPE ARCHITECT.
7. DO NOT PLACE MULCH IN CONTACT WITH TREE, KEEP AT LEAST 4" AWAY FROM TRUNK.
8. AFTER PLANTING, THOROUGHLY WATER TO ELIMINATE AIR POCKETS.

B EVERGREEN TREE PLANTING, BALLED & BURLAP

NOT TO SCALE

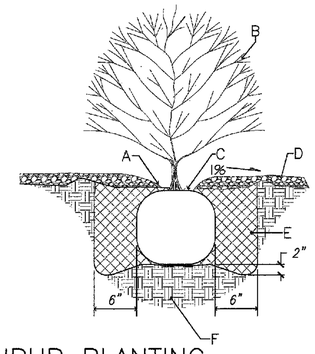

CONSTRUCTION NOTES:

A. MULCH SHALL BE FEATHERED TO A 2" DEPTH ON TOP OF ROOT BALL AND SHALL BE HELD BACK 2" FROM SHRUB STEM(S).
B. SHRUB LOCATION AND SPECIES AS PER PLAN
C. PLANT WITH TOP OF ROOT BALL FLUSH WITH SUB-GRADE (BOTTOM OF MULCH).
D. 4" DEPTH MULCH THROUGHOUT SHRUB BED UNLESS OTHERWISE NOTED
E. BACKFILL WITH 1/4 PART (BY VOLUME) COMPOST AND 3/4 PART (BY VOLUME) EXISTING SOIL. THOROUGHLY MIX BACKFILL PRIOR TO INSTALLATION.
F. UNDISTURBED NATIVE SOIL.

C SHRUB PLANTING

NOT TO SCALE

NO.	DESCRIPTION	DATE	BY
3			
2			
1			

REVISIONS (OR CHANGE NOTICES)

STATE OF NEW MEXICO
ROBERT M. ROBERDORFER
REGISTERED LANDSCAPE ARCHITECT

SCALE

DESIGNED BY: KV & GR	DRAWN BY: KV,RO,AB	CHECKED BY:RO & GR
DATE: 07/18/14	DATE: 08/12/15	DATE: 08/12/15

CITY OF SANTA FE

CERRILLOS ROAD PHASE IIC
CAMINO CARLOS REY TO
LLANO STREET
SANTA FE COUNTY

LANDSCAPE DETAILS

P:\2014050_CerrillosRdPhII\4. Drawings\CAD Drawings\100pct REV-Aug 2015\DET.dwg Oct 12, 2015 - 10:02am Saved By: roberdorfer

N.M. PROJECT NO. CN S100130 SHEET NO. 12-6

CITY OF SANTA FE	SHEET
NEW MEXICO PROJECT NO.	NO.
CN S100130	12-7

A. 3000 PSI CONCRETE PAVING WITH INTEGRAL COLOR, COLOR TO MATCH EXISTING CERRILLOS RD. PROJECT. SEAL WITH W1000 CLEAR – CURE AND SEALER. PATTERN SHALL BE STAMPED BRICK PATTERN TO MATCH EXISTING CERRILLOS ROAD PROJECT. SUBMIT PATTERN AND COLOR SAMPLE TO LANDSCAPE ARCHITECT FOR REVIEW PRIOR TO INSTALLATION.

B. COMPACTED SUBGRADE, 95% MOD. PROCTOR

C. 4" DEPTH CRUSHER FINES OVER FILTER FABRIC, SEE PLANTING PLANS

NOTES:

CURING/SEALER COMPOUND SHALL BE CONSIDERED INCIDENTAL TO COLORED MEDIAN PAVING WORK.

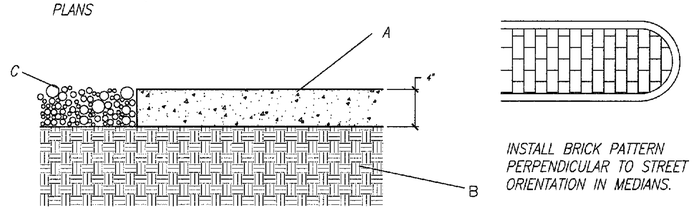

INSTALL BRICK PATTERN PERPENDICULAR TO STREET ORIENTATION IN MEDIANS.

A COLORED CONCRETE AT MEDIANS SECTION

NOT TO SCALE

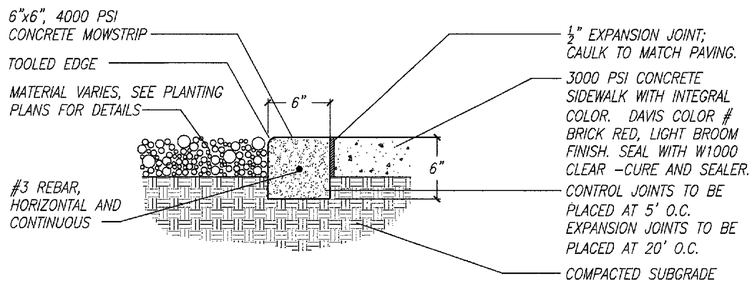

B CONCRETE CURB/ MOWSTRIP AT BUS STOPS

NOT TO SCALE

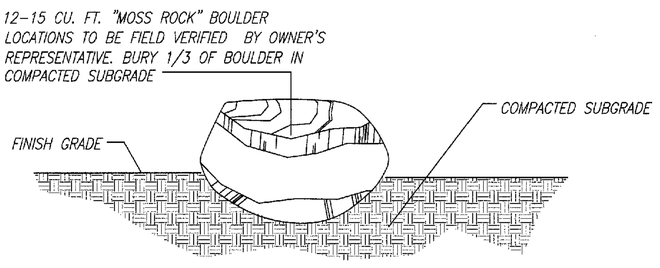

C LANDSCAPE BOULDER INSTALLATION

NOT TO SCALE

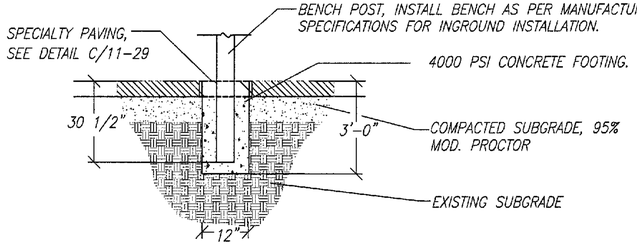

D BENCH FOOTING AT BUS STOPS

NOT TO SCALE

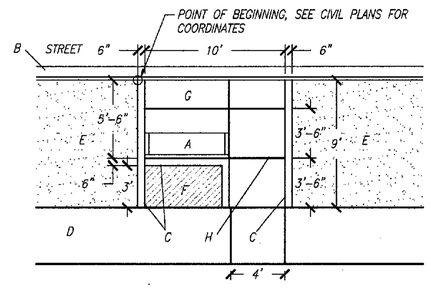

NOTE: CURING/SEALER COMPOUND SHALL BE CONSIDERED INCIDENTAL TO COLORED MEDIAN PAVING WORK.

A BENCH– MODEL #2884–4 2 SECTION BENCH, PROFILE SERIES AS MFG BY TIMBER FORM CONTACT: MICHAEL WOODS (303)688–2132 COLOR: WHITE. SEE DETAIL B/12–29 FOR FOOTING DETAIL.

B CURB AND GUTTER

C 6" CONCRETE CURB– SEE DETAIL B THIS SHEET.

D CONCRETE SIDEWALK– SEE CIVIL PLANS FOR DETAILS

E LANDSCAPE AREA, SEE LANDSCAPE PLAN

F PLANTER– 4" DEPTH, CRUSHER FINES MULCH OVER FILTER FABRIC– SEE PLANTING PLAN FOR DETAILS

G 3000 PSI CONCRETE SIDEWALK WITH INTEGRAL COLOR. DAVIS COLOR # BRICK RED, LIGHT BROOM FINISH. SEAL WITH W1000 CLEAR –CURE AND SEALER.

H CONTROL JOINTS. SEE DETAIL C/12–17.

E BUS STOP DETAIL PLAN– TYPICAL PAVING AND BENCH

NOT TO SCALE

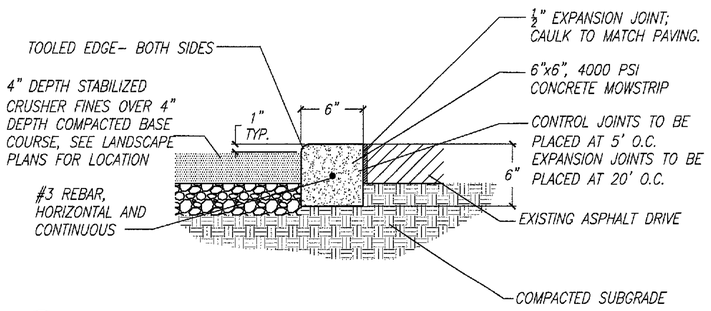

F CONCRETE MOWSTRIP

NOT TO SCALE

NOTE: CONTROL JOINTS TO BE PLACED AT 5' O.C.. EXPANSION JOINTS TO BE PLACED AT 15' O.C.

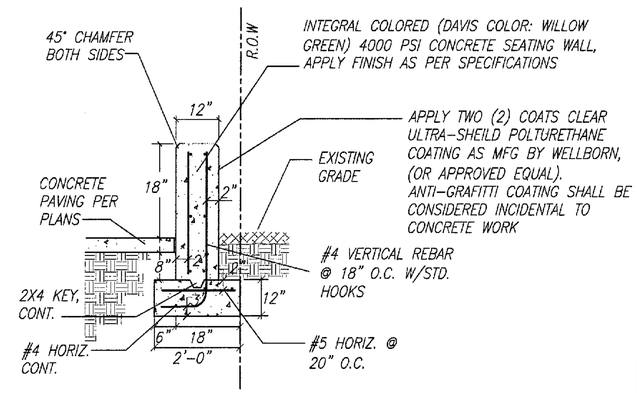

G CONCRETE SEATING WALL

NOT TO SCALE

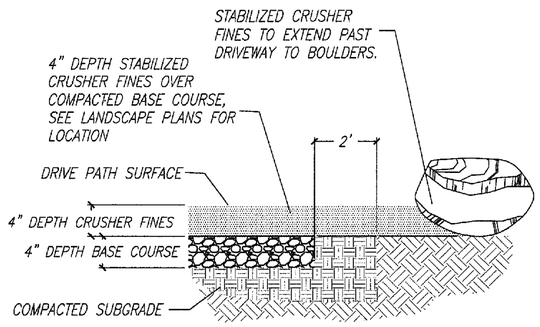

H CRUSHER FINES DRIVE PATH

NOT TO SCALE

NO.	DESCRIPTION	DATE	BY
3			
2			
1			

REVISIONS (OR CHANGE NOTICES)

STATE OF NEW MEXICO — ROBERT M. ROBERDORFER — LANDSCAPE ARCHITECT — REGISTERED

CITY OF SANTA FE

CERRILLOS ROAD PHASE IIC
CAMINO CARLOS REY TO
LLANO STREET
SANTA FE COUNTY

HARDSCAPE DETAILS

SCALE

DESIGNED BY: KV & GR	DRAWN BY: KV,RO,AB	CHECKED BY:RO & GR
DATE: 07/18/14	DATE: 08/12/15	DATE: 08/12/15

P:\2014050_CerrillosRdPhII\4. Drawings\CAD Drawings\100pct REV–Aug 2015\DET.dwg Oct 12, 2015 – 10:03am Saved By: roberdorfer

N.M. PROJECT NO. CN S100130 SHEET NO. 12–7

CITY OF SANTA FE	SHEET
NEW MEXICO PROJECT NO.	NO.
CN S100130	12-8

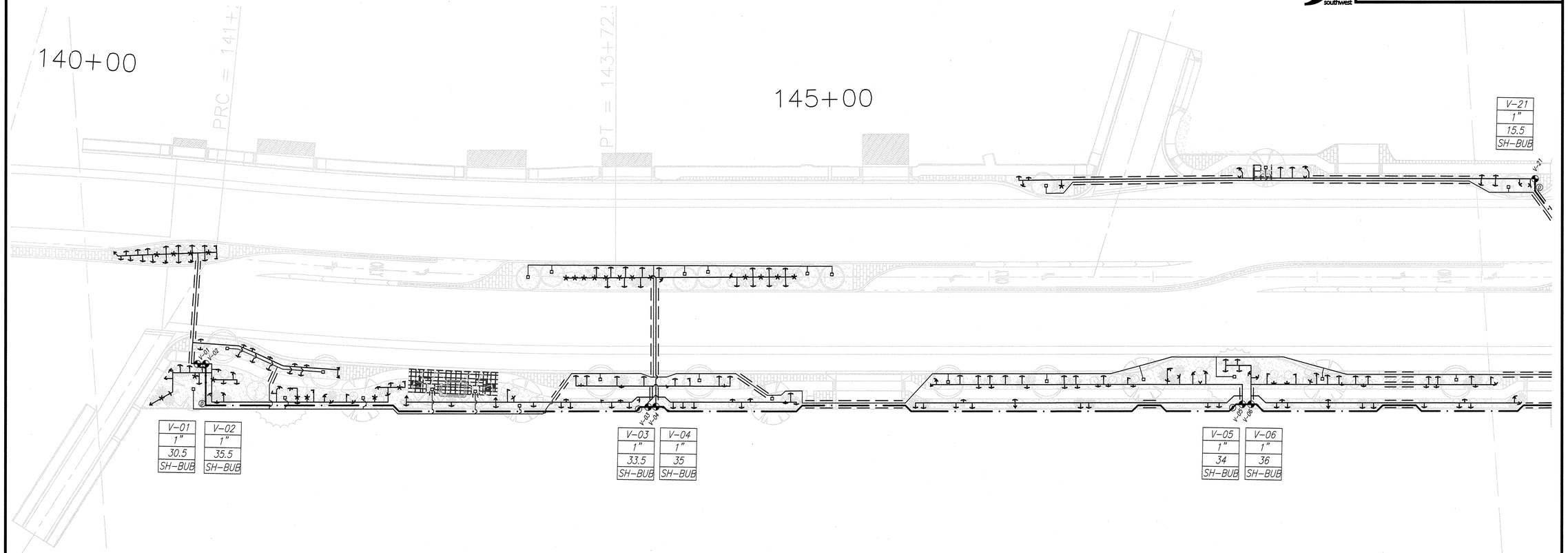

IRRIGATION LEGEND

NOTE: ALL IRRIGATION EQUIPMENT SHALL BE INSTALLED PER DETAILS SHOWN ON SHEETS 12-12 TO 12-15, AND PER THE SPECIFICATIONS.

C	IRRINET CONTROLLER #1 IRRNET 48 STATION CONTROLLER, IS-13A-TBW-RW-SS WITH KEYPAD V308 IN STRONGBOX SB-16SSW, PED-1655 POWDERCOATED PEDESTAL MOUNT ENCLOSURE. COLOR: DS SIERRA TAN SUPER POLYESTER #TIGE 01-38/15002.	DETAIL: D/12-13
WM	1" WATER METER. LOCATE AT POINT OF CONNECTION WITH WATER MAIN. CONTRACTOR SHALL COORDINATE LOCATION WITH OWNER'S REPRESENTATIVE.	DETAIL: D/12-15
	MASTER METER WITH ELECTRICAL OUTPUT REGISTER WIRED TO CONTROLLER AND FEBCO 825 Y REDUCED PRESSURE BACKFLOW ASSEMBLY (SIZE SAME AS METER) INSTALL IN HOT ROK GHR2 ENCLOSURE AND WRAP WITH HEAT TAPE. COLOR: DESERT ROSE.	DETAIL: A/12-12
	MANUAL ISOLATION VALVE - SCH 80 TRUE UNION BALL VALVE- SIZE AS PER MAINLINE SIZE	DETAIL: B/12-13
	RAINBIRD EFB-CP SERIES BRASS ELECTRIC CONTROL VALVE (SIZE AS PER PLAN). ALL VALVES SHALL BE LOCATED ADJACENT TO SIDEWALK AS PER DETAIL D/12-12. LOCATE TWO VALVES PER VALVE BOX WHERE POSSIBLE.	DETAIL: B/12-12
D	MANUAL DRAIN - CHAMPION 100 RS-100	DETAIL: E/12-12
A	CRISPIN UNIVERSAL AIR RELIEF VALVE. FIELD LOCATE AT HIGH POINT OF MAIN LINE.	DETAIL: A/12-13
———	MAINLINE- 2" SCH 40 PIPE -THRUST BLOCKS AS PER THE SPECIFICATIONS	DETAIL: E/12-13
———	SCH 40 PVC LATERAL- SIZE AS PER PIPE SIZING CHART	
= = =	SLEEVE - CLASS 200 PVC - TWO SIZES LARGER THAN THE PIPE TO BE SLEEVED	DETAIL: C/12-13

ALL POP-UP HEADS TO BE INSTALLED PER DETAIL C/12-12

- RAINBIRD 1804 SERIES HEAD W/5F-B MPR STREAM BUBBLER NOZZLE & PCS-060 SCREEN, 1.5 GPM. SEE DETAIL C/12-12, F/12-13.
- RAINBIRD 1804 SERIES HEAD W/5H-B MPR STREAM BUBBLER NOZZLE & PCS-060 SCREEN, 1.0 GPM. SEE DETAIL C/12-12, F/12-13.
- RAINBIRD 1804 SERIES HEAD W/5H-B MPR STREAM BUBBLER NOZZLE & PCS-060 SCREEN, 1.0 GPM. SEE DETAIL C/12-12, F/12-13.
- RAINBIRD 1402 SERIES PRESSURE COMPENSATING FULL-CIRCLE BUBBLERS 0.5 GPM. SEE DETAIL C/12-12, F/12-13.

VALVE LEGEND

V-XX	VALVE NUMBER
X"	VALVE SIZE
XX.X	GPM
XX-BUB	HEAD TYPE

IRRIGATION NOTES

CONTRACTOR SHALL FIELD LOCATE AND INSTALL CRISPIN MODEL UL 10.0 1" UNIVERSAL AIR RELEASE VALVE ASSEMBLY AS PER DETAIL A/12-13 AT ALL HIGH POINTS IN MAINLINE, ON EACH METER/CONTROL ZONE.

ALL IRRIGATION COMPONENTS HAVE BEEN SPECIFIED TO ESTABLISH SYSTEM REQUIREMENTS AND A LEVEL OF QUALITY. ANY SUBSTITUTIONS OF EQUAL OR BETTER QUALITY MUST BE APPROVED, AS PER THE SPECIFICATIONS.

ALL IRRIGATION BOXES SHALL BE TAN IN COLOR.

LATERALS SHALL BE SCHEDULE 40 PVC, SIZED AS INDICATED BELOW.

PIPE SIZING CHART

MAXIMUM DEMAND	
UP TO 8 GPM	3/4"
8 TO 12 GPM	1"
12 TO 22 GPM	1 1/4"
22 TO 30 GPM	1 1/2"
30 TO 50 GPM	2"
50 GPM AND UP	2 1/2"

NORTH

NO.	DESCRIPTION	DATE	BY
3			
2			
1			

REVISIONS (OR CHANGE NOTICES)

STATE OF NEW MEXICO
ROBERT W. OLDERDORFER
167
REGISTERED LANDSCAPE ARCHITECT

SCALE
1" = 30'

CITY OF SANTA FE

CERRILLOS ROAD PHASE IIC
CAMINO CARLOS REY TO
LLANO STREET
SANTA FE COUNTY

IRRIGATION PLANS

DESIGNED BY: KV & GR	DRAWN BY: KV,RO,AB	CHECKED BY:RO & GR
DATE: 07/18/14	DATE: 08/12/15	DATE: 08/12/15

P:\2014050_CerrillosRdPhII\4. Drawings\CAD Drawings\100pct REV-Aug 2015\IRR.dwg Oct 12, 2015 - 1:35pm Saved By: roberdorfer

N.M. PROJECT NO. CN S100130 SHEET NO. 12-8

CITY OF SANTA FE	SHEET
NEW MEXICO PROJECT NO.	NO.
CN S100130	12-9

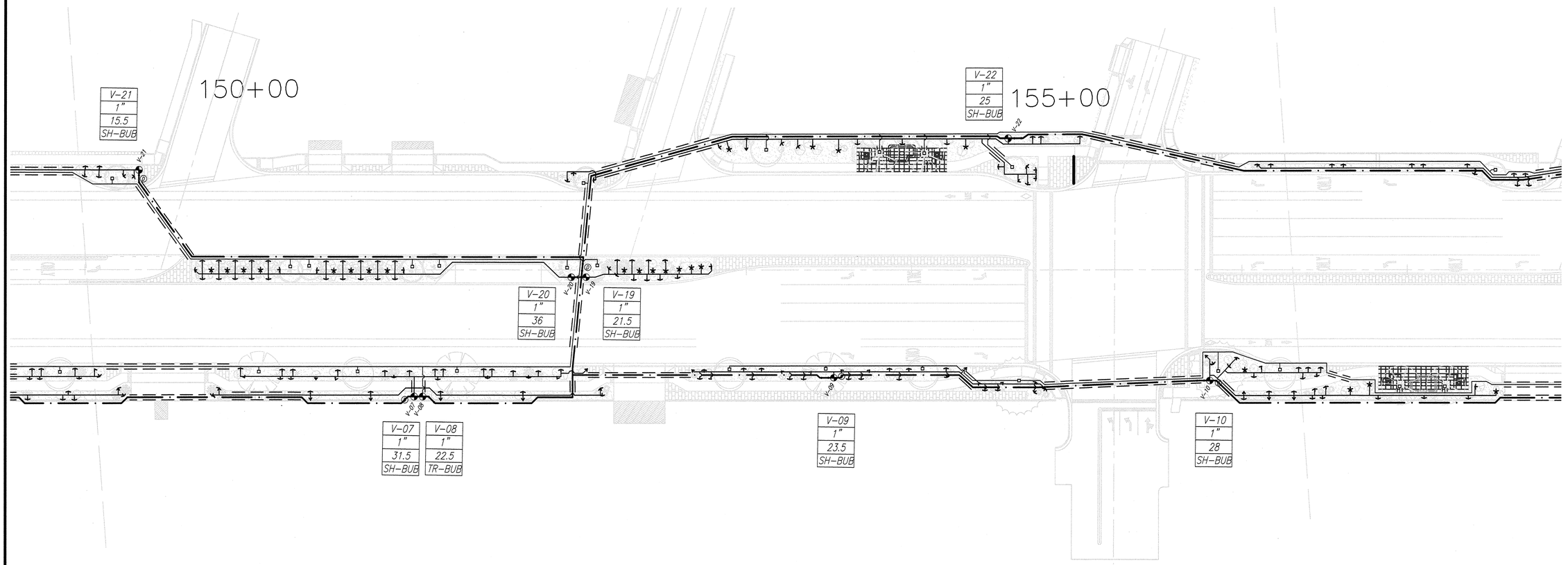

IRRIGATION LEGEND

NOTE: ALL IRRIGATION EQUIPMENT SHALL BE INSTALLED PER DETAILS SHOWN ON SHEETS 12-12 TO 12-15, AND PER THE SPECIFICATIONS.

C	IRRINET CONTROLLER #1 IRRNET 48 STATION CONTROLLER, IS-13A-T8W-RW-SS WITH KEYPAD V308 IN STRONGBOX SB-16SSW, PED-1655 POWDERCOATED PEDESTAL MOUNT ENCLOSURE. COLOR: DS SIERRA TAN SUPER POLYESTER #TIGE 01-38/15002.	DETAIL: D/12-13
WM	1" WATER METER. LOCATE AT POINT OF CONNECTION WITH WATER MAIN. CONTRACTOR SHALL COORDINATE LOCATION WITH OWNER'S REPRESENTATIVE.	DETAIL: D/12-15
	MASTER METER WITH ELECTRICAL OUTPUT REGISTER WIRED TO CONTROLLER AND FEBCO 825 Y REDUCED PRESSURE BACKFLOW ASSEMBLY (SIZE SAME AS METER) INSTALL IN HOT ROK GHR2 ENCLOSURE AND WRAP WITH HEAT TAPE. COLOR: DESERT ROSE.	DETAIL: A/12-12
	MANUAL ISOLATION VALVE - SCH 80 TRUE UNION BALL VALVE- SIZE AS PER MAINLINE SIZE	DETAIL: B/12-13
	RAINBIRD EFB-CP SERIES BRASS ELECTRIC CONTROL VALVE (SIZE AS PER PLAN). ALL VALVES SHALL BE LOCATED ADJACENT TO SIDEWALK AS PER DETAIL D/12-12. LOCATE TWO VALVES PER VALVE BOX WHERE POSSIBLE.	DETAIL: B/12-12
D	MANUAL DRAIN - CHAMPION 100 RS-100	DETAIL: E/12-12
A	CRISPIN UNIVERSAL AIR RELIEF VALVE. FIELD LOCATE AT HIGH POINT OF MAIN LINE.	DETAIL: A/12-13
———	MAINLINE-2" SCH 40 PIPE -THRUST BLOCKS AS PER THE SPECIFICATIONS	DETAIL: E/12-13
———	SCH 40 PVC LATERAL- SIZE AS PER PIPE SIZING CHART	
= = =	SLEEVE - CLASS 200 PVC - TWO SIZES LARGER THAN THE PIPE TO BE SLEEVED	DETAIL: C/12-13

ALL POP-UP HEADS TO BE INSTALLED PER DETAIL C/12-12

- RAINBIRD 1804 SERIES HEAD W/5F-B MPR STREAM BUBBLER NOZZLE & PCS-060 SCREEN, 1.5 GPM. SEE DETAIL C/12-12, F/12-13.
- RAINBIRD 1804 SERIES HEAD W/5H-B MPR STREAM BUBBLER NOZZLE & PCS-060 SCREEN, 1.0 GPM. SEE DETAIL C/12-12, F/12-13.
- RAINBIRD 1804 SERIES HEAD W/5H-B MPR STREAM BUBBLER NOZZLE & PCS-060 SCREEN, 1.0 GPM. SEE DETAIL C/12-12, F/12-13.
- RAINBIRD 1402 SERIES PRESSURE COMPENSATING FULL-CIRCLE BUBBLERS 0.5 GPM. SEE DETAIL C/12-12, F/12-13.

VALVE LEGEND

V-XX	VALVE NUMBER
X"	VALVE SIZE
XX.X	GPM
XX-BUB	HEAD TYPE

IRRIGATION NOTES

CONTRACTOR SHALL FIELD LOCATE AND INSTALL CRISPIN MODEL UL 10.0 1" UNIVERSAL AIR RELEASE VALVE ASSEMBLY AS PER DETAIL A/12-13 AT ALL HIGH POINTS IN MAINLINE, ON EACH METER/CONTROL ZONE.

ALL IRRIGATION COMPONENTS HAVE BEEN SPECIFIED TO ESTABLISH SYSTEM REQUIREMENTS AND A LEVEL OF QUALITY. ANY SUBSTITUTIONS OF EQUAL OR BETTER QUALITY MUST BE APPROVED, AS PER THE SPECIFICATIONS.

ALL IRRIGATION BOXES SHALL BE TAN IN COLOR.

LATERALS SHALL BE SCHEDULE 40 PVC, SIZED AS INDICATED BELOW.

PIPE SIZING CHART

MAXIMUM DEMAND	
UP TO 8 GPM	3/4"
8 TO 12 GPM	1"
12 TO 22 GPM	1 1/4"
22 TO 30 GPM	1 1/2"
30 TO 50 GPM	2"
50 GPM AND UP	2 1/2"

NORTH

SCALE 1" = 30'

0 15 30 60

DESIGNED BY: KV & GR	DRAWN BY: KV,RO,AB	CHECKED BY:RO & GR
DATE: 07/18/14	DATE: 08/12/15	DATE: 08/12/15

STATE OF NEW MEXICO — ROBERT W. OBERDORFER 167 — REGISTERED LANDSCAPE ARCHITECT

NO.	DESCRIPTION	DATE	BY
3			
2			
1			

REVISIONS (OR CHANGE NOTICES)

CITY OF SANTA FE

CERRILLOS ROAD PHASE IIC
CAMINO CARLOS REY TO
LLANO STREET
SANTA FE COUNTY

IRRIGATION PLANS

CITY OF SANTA FE	SHEET
NEW MEXICO PROJECT NO.	NO.
CN S100130	12-10

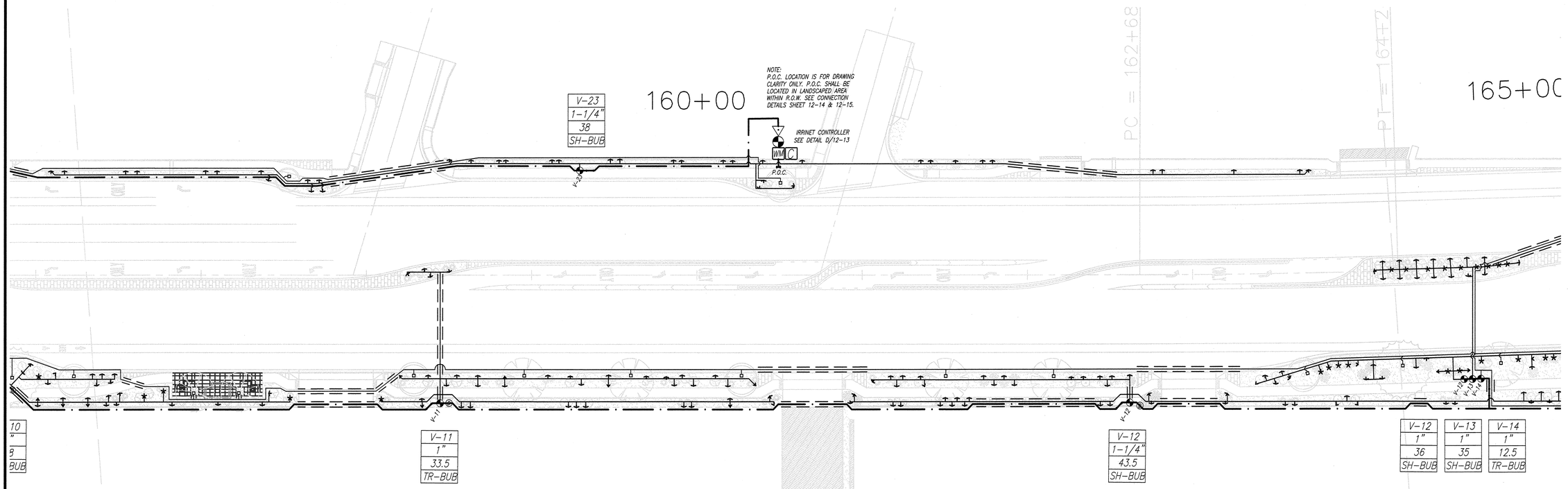

IRRIGATION LEGEND

NOTE: ALL IRRIGATION EQUIPMENT SHALL BE INSTALLED PER DETAILS SHOWN ON SHEETS 12-12 TO 12-15, AND PER THE SPECIFICATIONS.

C	IRRINET CONTROLLER #1 IRRNET 48 STATION CONTROLLER, IS-13A-T8W-RW-SS WITH KEYPAD V308 IN STRONGBOX SB-16SSW, PED-1655 POWDERCOATED PEDESTAL MOUNT ENCLOSURE. COLOR: DS SIERRA TAN SUPER POLYESTER #TIGE 01-38/15002.	DETAIL: D/12-13
WM	1" WATER METER. LOCATE AT POINT OF CONNECTION WITH WATER MAIN. CONTRACTOR SHALL COORDINATE LOCATION WITH OWNER"S REPRESENTATIVE.	DETAIL: D/12-15
	MASTER METER WITH ELECTRICAL OUTPUT REGISTER WIRED TO CONTROLLER AND FEBCO 825 Y REDUCED PRESSURE BACKFLOW ASSEMBLY (SIZE SAME AS METER) INSTALL IN HOT ROK GHR2 ENCLOSURE AND WRAP WITH HEAT TAPE. COLOR: DESERT ROSE.	DETAIL: A/12-12
	MANUAL ISOLATION VALVE - SCH 80 TRUE UNION BALL VALVE- SIZE AS PER MAINLINE SIZE	DETAIL: B/12-13
	RAINBIRD EFB-CP SERIES BRASS ELECTRIC CONTROL VALVE (SIZE AS PER PLAN). ALL VALVES SHALL BE LOCATED ADJACENT TO SIDEWALK AS PER DETAIL D/12-12. LOCATE TWO VALVES PER VALVE BOX WHERE POSSIBLE.	DETAIL: B/12-12
D	MANUAL DRAIN - CHAMPION 100 RS-100	DETAIL: E/12-12
A	CRISPIN UNIVERSAL AIR RELIEF VALVE. FIELD LOCATE AT HIGH POINT OF MAIN LINE.	DETAIL: A/12-13
———	MAINLINE-2" SCH 40 PIPE -THRUST BLOCKS AS PER THE SPECIFICATIONS	DETAIL: E/12-13
———	SCH 40 PVC LATERAL- SIZE AS PER PIPE SIZING CHART	
= = =	SLEEVE - CLASS 200 PVC - TWO SIZES LARGER THAN THE PIPE TO BE SLEEVED	DETAIL: C/12-13

ALL POP-UP HEADS TO BE INSTALLED PER DETAIL C/12-12

- RAINBIRD 1804 SERIES HEAD W/5F-B MPR STREAM BUBBLER NOZZLE & PCS-060 SCREEN, 1.5 GPM. SEE DETAIL C/12-12, F/12-13.
- RAINBIRD 1804 SERIES HEAD W/5H-B MPR STREAM BUBBLER NOZZLE & PCS-060 SCREEN, 1.0 GPM. SEE DETAIL C/12-12, F/12-13.
- RAINBIRD 1804 SERIES HEAD W/5H-B MPR STREAM BUBBLER NOZZLE & PCS-060 SCREEN, 1.0 GPM. SEE DETAIL C/12-12, F/12-13.
- RAINBIRD 1402 SERIES PRESSURE COMPENSATING FULL-CIRCLE BUBBLERS 0.5 GPM. SEE DETAIL C/12-12, F/12-13.

VALVE LEGEND

V-XX	VALVE NUMBER
X"	VALVE SIZE
XX.X	GPM
XX-BUB	HEAD TYPE

IRRIGATION NOTES

CONTRACTOR SHALL FIELD LOCATE AND INSTALL CRISPIN MODEL UL 10.0 1" UNIVERSAL AIR RELEASE VALVE ASSEMBLY AS PER DETAIL A/12-13 AT ALL HIGH POINTS IN MAINLINE, ON EACH METER/CONTROL ZONE.

ALL IRRIGATION COMPONENTS HAVE BEEN SPECIFIED TO ESTABLISH SYSTEM REQUIREMENTS AND A LEVEL OF QUALITY. ANY SUBSTITUTIONS OF EQUAL OR BETTER QUALITY MUST BE APPROVED, AS PER THE SPECIFICATIONS.

ALL IRRIGATION BOXES SHALL BE TAN IN COLOR.

LATERALS SHALL BE SCHEDULE 40 PVC, SIZED AS INDICATED BELOW.

PIPE SIZING CHART

MAXIMUM DEMAND	
UP TO 8 GPM	3/4"
8 TO 12 GPM	1"
12 TO 22 GPM	1 1/4"
22 TO 30 GPM	1 1/2"
30 TO 50 GPM	2"
50 GPM AND UP	2 1/2"

NORTH

NO.	DESCRIPTION	DATE	BY
3			
2			
1			

REVISIONS (OR CHANGE NOTICES)

STATE OF NEW MEXICO
ROBERT W. ROBERDORFER
REGISTERED LANDSCAPE ARCHITECT

SCALE
1" = 30'

0 15 30 60

DESIGNED BY: KV & GR	DRAWN BY: KV,RO,AB	CHECKED BY:RO & GR
DATE: 07/18/14	DATE: 08/12/15	DATE: 08/12/15

CITY OF SANTA FE

CERRILLOS ROAD PHASE IIC
CAMINO CARLOS REY TO
LLANO STREET
SANTA FE COUNTY

IRRIGATION PLANS

P:\2014050_CerrillosRdPhII\4. Drawings\CAD Drawings\100pct REV-Aug 2015\IRR.dwg Oct 12, 2015 - 1:56pm Saved By: roberdorfer

N.M. PROJECT NO. CN S100130 SHEET NO. 12-10

CITY OF SANTA FE	SHEET
NEW MEXICO PROJECT NO.	NO.
CN S100130	12–11

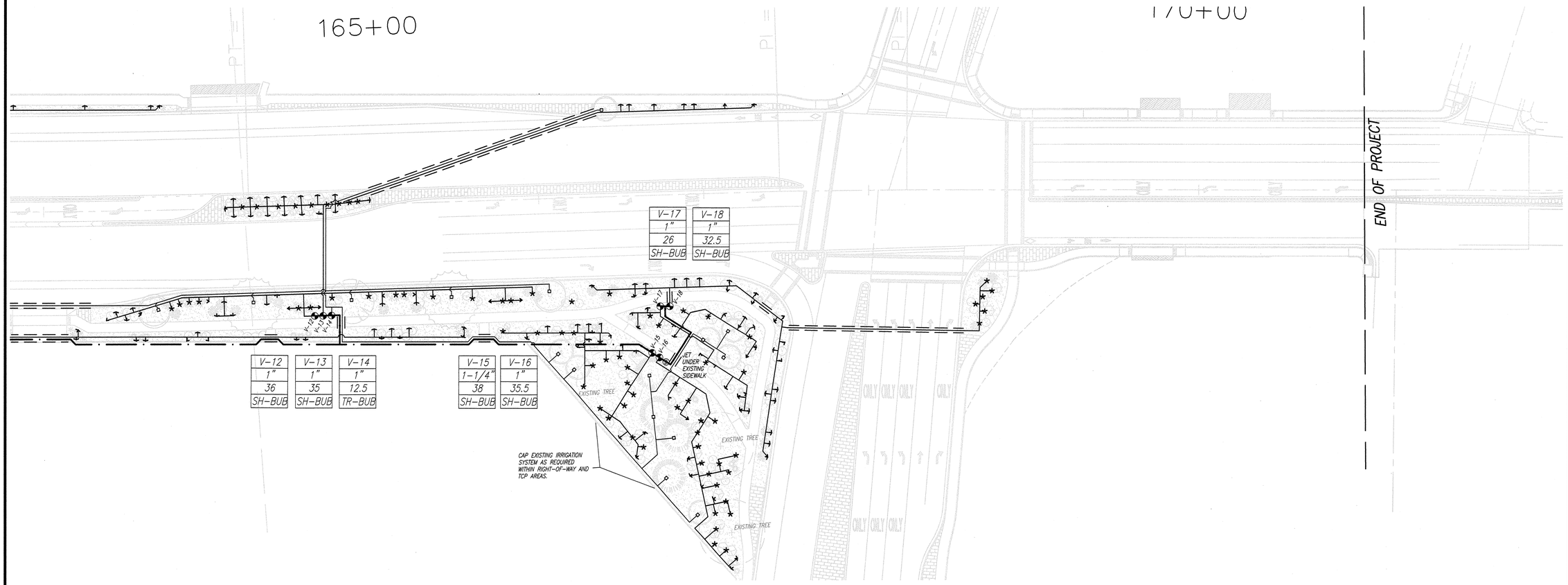

IRRIGATION LEGEND

NOTE: ALL IRRIGATION EQUIPMENT SHALL BE INSTALLED PER DETAILS SHOWN ON SHEETS 12–12 TO 12–15, AND PER THE SPECIFICATIONS.

C	IRRINET CONTROLLER #1 IRRINET 48 STATION CONTROLLER, IS–13A–TBW–RW–SS WITH KEYPAD V308 IN STRONGBOX SB–16SSW, PED–1655 POWDERCOATED PEDESTAL MOUNT ENCLOSURE. COLOR: DS SIERRA TAN SUPER POLYESTER #TIGE 01–38/15002.	DETAIL: D/12–13
WM	1" WATER METER. LOCATE AT POINT OF CONNECTION WITH WATER MAIN. CONTRACTOR SHALL COORDINATE LOCATION WITH OWNER"S REPRESENTATIVE.	DETAIL: D/12–15
	MASTER METER WITH ELECTRICAL OUTPUT REGISTER WIRED TO CONTROLLER AND FEBCO 825 Y REDUCED PRESSURE BACKFLOW ASSEMBLY (SIZE SAME AS METER) INSTALL IN HOT ROK GHR2 ENCLOSURE AND WRAP WITH HEAT TAPE. COLOR: DESERT ROSE.	DETAIL: A/12–12
	MANUAL ISOLATION VALVE – SCH 80 TRUE UNION BALL VALVE– SIZE AS PER MAINLINE SIZE	DETAIL: B/12–13
	RAINBIRD EFB–CP SERIES BRASS ELECTRIC CONTROL VALVE (SIZE AS PER PLAN). ALL VALVES SHALL BE LOCATED ADJACENT TO SIDEWALK AS PER DETAIL D/12–12. LOCATE TWO VALVES PER VALVE BOX WHERE POSSIBLE.	DETAIL: B/12–12
D	MANUAL DRAIN – CHAMPION 100 RS–100	DETAIL: E/12–12
A	CRISPIN UNIVERSAL AIR RELIEF VALVE. FIELD LOCATE AT HIGH POINT OF MAIN LINE.	DETAIL: A/12–13
———	MAINLINE–2" SCH 40 PIPE – THRUST BLOCKS AS PER THE SPECIFICATIONS	DETAIL: E/12–13
———	SCH 40 PVC LATERAL– SIZE AS PER PIPE SIZING CHART	
= = =	SLEEVE – CLASS 200 PVC – TWO SIZES LARGER THAN THE PIPE TO BE SLEEVED	DETAIL: C/12–13

ALL POP–UP HEADS TO BE INSTALLED PER DETAIL C/12–12

- RAINBIRD 1804 SERIES HEAD W/5F–B MPR STREAM BUBBLER NOZZLE & PCS–060 SCREEN, 1.5 GPM. SEE DETAIL C/12–12, F/12–13.
- RAINBIRD 1804 SERIES HEAD W/5H–B MPR STREAM BUBBLER NOZZLE & PCS–060 SCREEN, 1.0 GPM. SEE DETAIL C/12–12, F/12–13.
- RAINBIRD 1804 SERIES HEAD W/5H–B MPR STREAM BUBBLER NOZZLE & PCS–060 SCREEN, 1.0 GPM. SEE DETAIL C/12–12, F/12–13.
- RAINBIRD 1402 SERIES PRESSURE COMPENSATING FULL–CIRCLE BUBBLERS 0.5 GPM. SEE DETAIL C/12–12, F/12–13.

VALVE LEGEND

V–XX	VALVE NUMBER
X"	VALVE SIZE
XX.X	GPM
XX–BUB	HEAD TYPE

IRRIGATION NOTES

CONTRACTOR SHALL FIELD LOCATE AND INSTALL CRISPIN MODEL UL 10.0 1" UNIVERSAL AIR RELEASE VALVE ASSEMBLY AS PER DETAIL A/12–13 AT ALL HIGH POINTS IN MAINLINE, ON EACH METER/CONTROL ZONE.

ALL IRRIGATION COMPONENTS HAVE BEEN SPECIFIED TO ESTABLISH SYSTEM REQUIREMENTS AND A LEVEL OF QUALITY. ANY SUBSTITUTIONS OF EQUAL OR BETTER QUALITY MUST BE APPROVED, AS PER THE SPECIFICATIONS.

ALL IRRIGATION BOXES SHALL BE TAN IN COLOR.

LATERALS SHALL BE SCHEDULE 40 PVC, SIZED AS INDICATED BELOW.

PIPE SIZING CHART

MAXIMUM DEMAND	
UP TO 8 GPM	3/4"
8 TO 12 GPM	1"
12 TO 22 GPM	1 1/4"
22 TO 30 GPM	1 1/2"
30 TO 50 GPM	2"
50 GPM AND UP	2 1/2"

NORTH

NO.	DESCRIPTION	DATE	BY
3			
2			
1			

REVISIONS (OR CHANGE NOTICES)

STATE OF NEW MEXICO — ROBERT W. OBERDORFER — 187 — REGISTERED LANDSCAPE ARCHITECT

0 15 30 60

SCALE 1" = 30'

DESIGNED BY: KV & GR	DRAWN BY: KV,RO,AB	CHECKED BY:RO & GR
DATE: 07/18/14	DATE: 08/12/15	DATE: 08/12/15

CITY OF SANTA FE

CERRILLOS ROAD PHASE IIC
CAMINO CARLOS REY TO
LLANO STREET
SANTA FE COUNTY

IRRIGATION PLANS

P:\2014050_CerrillosRdPhII\4. Drawings\CAD Drawings\100pct REV–Aug 2015\IRR.dwg Oct 12, 2015 – 1:57pm Saved By: roberdorfer

N.M. PROJECT NO. CN S100130 SHEET NO. 12–11

CITY OF SANTA FE	SHEET
NEW MEXICO PROJECT NO.	NO.
CN S100130	12-12

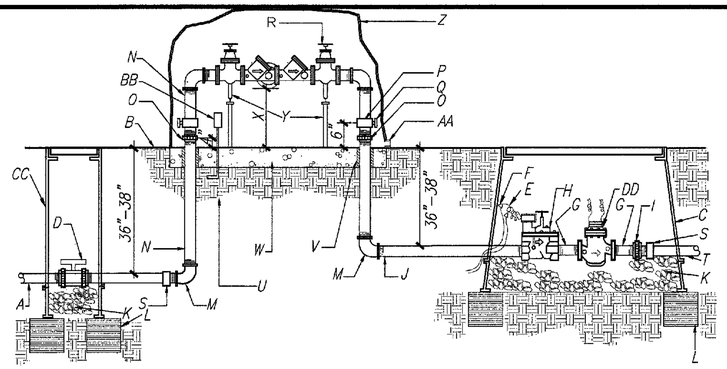

GENERAL NOTES:

1. HORIZONTAL RPBA INSTALLATION REQUIRED.
2. ABOVE GRADE RPBA INSTALLATION REQUIRED.
3. WATER LINE PRESSURE AND TEMPERATURE MUST NOT EXCEED RATED CAPACITY OF RPBA.
4. PROTECT FROM FREEZING WITH POSITIVE HEAT SOURCE AND INSULATION.
5. MINIMUM RPBA SIZE MUST BE THE BUILDING SERVICE LINE SIZE.
6. DO NOT INSTALL IN FLOOD PRONE AREAS.
7. INSTALL WATER HAMMER ARRESTORS & THERMO EXPANSION PROTECTION AS NECESSARY.
8. METALLIC RISER PIPING REQUIRED.
9. JOINTS TO BE ADEQUATELY RESTRAINED.
10. DEVIATION FROM THESE SPECIFICATIONS MUST HAVE PRIOR WRITTEN APPROVAL FROM THE ADMINISTRATIVE AUTHORITY.

CONSTRUCTION NOTES:

A. SERVICE LINE TO WATER METER, NO OUTLETS ALLOWED.
B. FINISH GRADE, MATERIAL VARIES REFERENCE PLANS.
C. BROOKS PRODUCTS INC., 1730 PB-18 BODY (ABS) VALVE BOX W/ BOLT DOWN COVER (ABS) AND ONE 8" EXTENSION.
D. TRUE UNION SCHEDULE 80 PVC BALL VALVE.
E. 24" WIRE EXPANSION COIL.
F. 3M SKOTCH LOK.
G. SCHEDULE 80 PVC 4" NIPPLE.
H. ELECTRIC VALVE (REFERENCE DRAWINGS FOR SIZE).
I. SPEARS SCHEDULE 80 PVC UNION.
J. SCHEDULE 80 PVC NIPPLE 3'MIN.
K. 1" DIAMETER WASHED ROCK.
L. 8"X8"X16" SOLID CMU BLOCK.
M. GALVANIZED ELL.
N. GALVANIZED NIPPLE.
O. GALVANIZED UNION (MINIMUM 4" ABOVE GRADE).
P. GALVANIZED TEE.
Q. BALL DRAIN, CHAMPION DV050 1/2"
R. RPBA BACKFLOW PREVENTER (REFERENCE DRAWINGS).
S. PVC MIP ADAPTER.
T. NON-CONSTANT PRESSURE IRRIGATION MAINLINE.
U. COMPACTED SUBGRADE.
V. ADEQUATE SLEEVING & INSULATION MIN. 1" THICK.
W. MINIMUM 4" CONCRETE SLAB.
X. 30" MAX.12" MIN. (FROM LOWEST POINT OF ASSEMBLY TO TOP OF SLAB.
Y. PROVIDE METALLIC OR REINF. CONCRETE SUPPORTS ON UNITS GREATER THAN 2".
Z. HOT ROK ENCLOSURE MODEL GHR2, COLOR: DESERT ROSE.
AA. DRAIN, SIZE TO HANDLE FULL DISCHARGE OF RELIEF VALVE.
BB. ELECTRIC OUTLET FOR HEATED PROTECTIVE ENCLOSURE MUST BE PLACED AWAY FROM RELIEF VALVE.
CC. BROOKS 7"DIA. VALVE BOX WITH BOLT DOWN COVER AND 6" DIA. EXTENSION.
DD. MASTER METER REFERENCE IRRIGATION LEGEND FOR SIZE. 2 WIRE SETUP:2 BLUE FOR MASTER FLOW METER.

A IRRIGATION MASTER VALVE WITH REDUCED PRESSURE BACKFLOW PREVENTER

NOT TO SCALE

CONSTRUCTION NOTES:

A FINISH GRADE
B BROOKS PRODUCTS, INC.(OR APPROVED EQUAL) 1730 PB-18 BODY (ABS) VALVE BOX WITH BOLT DOWN COVER (ABS) AND 8" EXTENSIONS.
C 3M SCOTCHLOK CONNECTORS.(OR APPROVED EQUAL)
D IRRIGATION MAINLINE/LATERAL MAINLINE.
E IRRIGATION MAINLINE SERVICE TEE OR ELL.
F SCHEDULE 80 PVC NIPPLE.
G *SPEARS TRUE UNION SCHEDULE 80 PVC BALL VALVE.(OR APPROVED EQUAL)
H SCHEDULE 80 PVC CLOSE NIPPLE
I ELECTRIC VALVE (SEE PLAN)
J SPEARS SCHEDULE 80 PVC UNION.(OR APPROVED EQUAL)

* NOTE: UP TO FOUR VALVES OF SIMILAR APPLICATION USE OR LOCATION MAY BE GANGED ON A HEADER USING A SINGLE BALL VALVE, WITH APPROVAL OF THE OWNER'S REPRESENTATIVE.

K LATERAL LINE.
L 1 CUBIC FOOT 1" DIAMETER WASHED ROCK.
M 8" X 8" X 16" SOLID CMU BLOCK.
N 24" WIRE EXPANSION COIL.

GENERAL NOTES:

1. INSTALL AND 8" X 8" X 16" SOLID CMU BLOCK AT EACH CORNER OF THE VALVE BOX.
2. WASH ROCK SHALL BE INSTALLED FLUSH WITH BOTTOM OF PIPE AND VALVE.
3. TWO VALVES MAY BE INSTALLED IN ONE 1730 BOX.

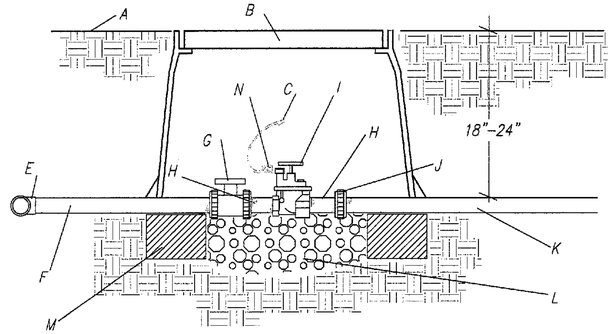

B IRRIGATION ELECTRIC VALVE

NOT TO SCALE

NOTE: BUBBLERS FOR TREES SHALL BE INSTALLED ON THE UPHILL SIDE OF THE TREE, TYP. WHERE SLOPES OCCUR.

GENERAL NOTES:

1. THIS DETAIL SHALL BE USED FOR POP-UP BUBBLER, AND STREAM IRRIGATION HEADS
2. LATERAL LINE TESTING SHALL BE COMPLETED PRIOR TO THE INSTALLATION OF THE FLEX PIPE ASSEMBLY. LATERAL TESTING SHALL BE ACCOMPLISHED BY INSTALLING A PLUG IN THE OUTLET OF LATERAL LINE TEES AND ELLS.
3. TOP OF HEAD SHALL BE SET FLUSH WITH FINISH GRADE

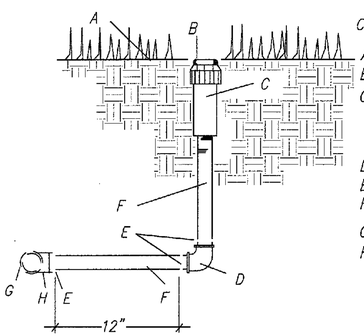

CONSTRUCTION NOTES:

A. FINISH GRADE
B. SPRINKLER HEAD (SEE PLAN)
C. FLEXIBLE NIPPLE. (LENGTH SHALL DEPEND ON THE SIZE OF THE SPRINKLER HEAD)
D. SCH 40 PVC THREADED ELL.
E. SCH 40 PVC MIP ADAPTER.
F. PVC FLEXIBLE VINYL PIPE, STD IPS
G. LATERAL PIPE.
H. LATERAL TEE OR ELL

C IRRIGATION POP-UP HEAD WITH FLEX PIPE ASSEMBLY

NOT TO SCALE

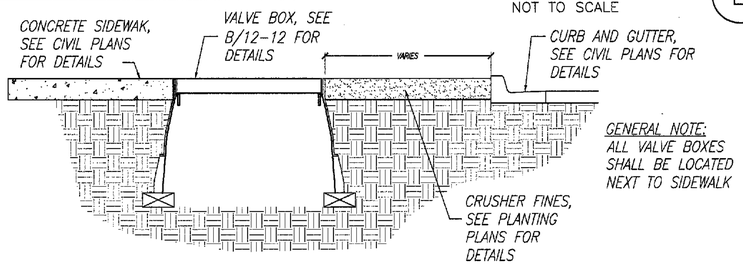

GENERAL NOTE:
ALL VALVE BOXES SHALL BE LOCATED NEXT TO SIDEWALK

D VALVE BOX LOCATION DETAIL

NOT TO SCALE

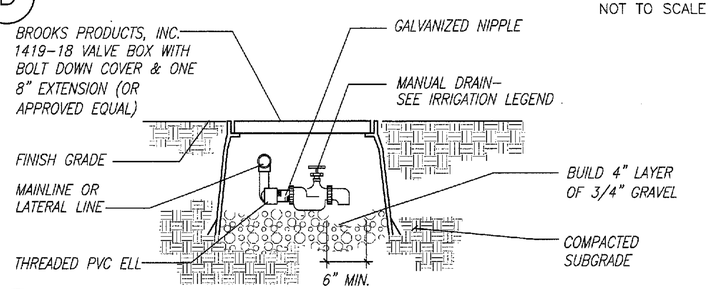

E MANUAL DRAIN

NOT TO SCALE

NO.	DESCRIPTION	DATE	BY
3			
2			
1			

REVISIONS (OR CHANGE NOTICES)

STATE OF NEW MEXICO — ROBERT W. OVERDORFER — 167 — REGISTERED LANDSCAPE ARCHITECT

SCALE

CITY OF SANTA FE

CERRILLOS ROAD PHASE IIC
CAMINO CARLOS REY TO
LLANO STREET
SANTA FE COUNTY

IRRIGATION DETAILS

DESIGNED BY: KV & GR	DRAWN BY: KV,RO,AB	CHECKED BY:RO & GR
DATE: 07/18/14	DATE: 08/12/15	DATE: 08/12/15

P:\2014050_CerrillosRdPhII\4. Drawings\CAD Drawings\100pct REV-Aug 2015\DET.dwg Oct 12, 2015 - 2:01pm Saved By: roberdorfer

N.M. PROJECT NO. CN S100130 SHEET NO. 12-12

CITY OF SANTA FE	SHEET
NEW MEXICO PROJECT NO.	NO.
CN S100130	12-13

SCH 40 PVC S
X S X T TEE OR
S X T ELL.

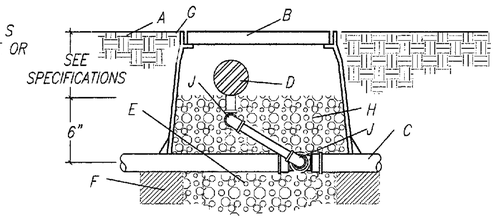

A AIR RELEASE VALVE

NOT TO SCALE

GENERAL NOTES:

1. INSTALL AN 8" X 8" X 16" SOLID CMU BLOCK AT EACH CORNER OF THE VALVE BOX.
2. WASH ROCK SHALL BE INSTALLED FLUSH WITH BOTTOM OF PIPE AND VALVE.
3. AIR RELEASE VALVES SHALL BE INSTALLED AT ALL HIGH POINTS IN THE MAINLINE AND/OR AS SHOWN ON THE PLANS.

CONSTRUCTION NOTES:

A. FINISH GRADE
B. BROOKS PRODUCTS, INC. 1419-18 BODY (ABS) VALVE BOX WITH BOLT DOWN COVER (ABS) AND (2) 6 3/4" EXTENSIONS, OR APPROVED EQUAL.
C. IRRIGATION MAINLINE/LATERAL MAINLINE.
D. AIR RELEASE VALVE- SEE IRRIGATION LEGEND.
E. 1 CUBIC FOOT 1" DIAMETER WASHED ROCK.
F. 8" X 8" X 16" SOLID CMU BLOCK.
G. 6 mm BLACK POLYETHYLENE PLASTIC. TAPE TO ALL INLET AND OUTLET PIPE. INSTALL THE FULL DEPTH OF THE VALVE BOX.
H. 6" DEPTH OF 3/4" GRAVEL SCH 40
J. PVC STREET ELL

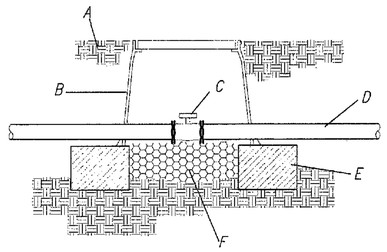

B MAINLINE ISOLATION VALVE

NOT TO SCALE

GENERAL NOTES:

1. INSTALL AN 8" X 8" X 16" SOLID CMU BLOCK AT EACH CORNER OF THE VALVE BOX
2. SEE SPECIFICATIONS FOR DEPTH OF BURY.

CONSTRUCTION NOTES:

A. FINISH GRADE
B. BROOK'S PRODUCTS INC, 1419-18 BODY (ABS) VALVE BOX WITH BOLT DOWN COVER (ABS) AND (1) 6 3/4" EXTENSION, OR APPROVED EQUAL.
C. TRUE UNION SCHEDULE 80 PVC BALL VALVE
D. IRRIGATION MAINLINE
E. 8" X 8" X 16" SOLID CMU BLOCK.
F. 4" LAYER 3/4" GRAVEL

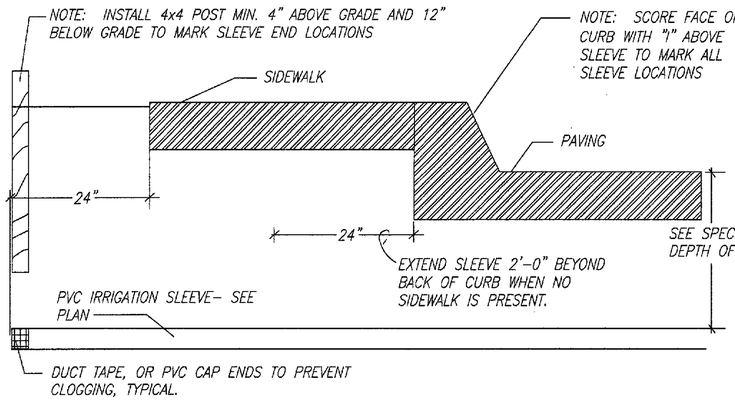

C IRRIGATION SLEEVES UNDER PAVING AND SIDEWALKS

NOT TO SCALE

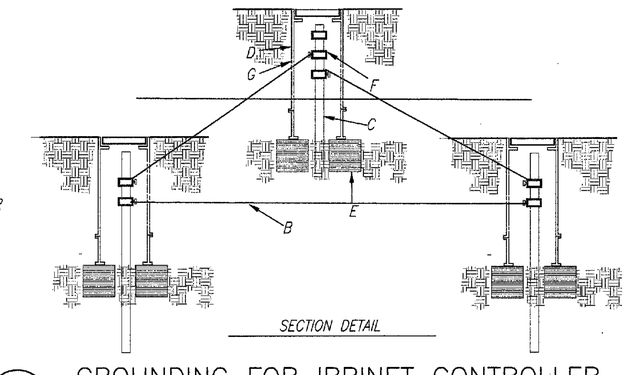

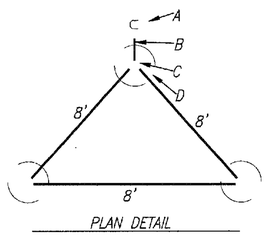

CONSTRUCTION NOTES:

A. IRRINET CONTROLLER UNIT
B. #10 AGW WIRE FROM MIR CONTROLLER UNIT. WIRE SHOULD BE TIGHT AND STRAIGHT.
C. GROUND ROD MUST BE PLACED IN A WATERED AREA SET 8' AWAY FROM CONTROLLER UNIT AND 8' FROM ONE ROD TO ANOTHER.
D. 7" DIAM. 9" DEEP BROOKS VALVE BOX 700 SERIES WITH COVER.
E. 8"x8"x16" SOLID CMU BLOCK.
F. GROUND ROD CLAMP AVAILABLE THRU SIMPSON NORTON IRRIGATION.
G. INSTALL NEW OPENING REQUIRED TO MAINTAIN A TIGHT AND STRAIGHT WIRE.

D GROUNDING FOR IRRINET CONTROLLER

NOT TO SCALE

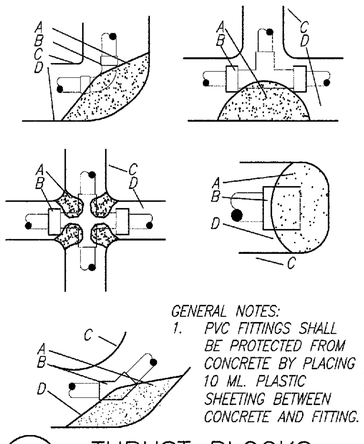

GENERAL NOTES:

1. PVC FITTINGS SHALL BE PROTECTED FROM CONCRETE BY PLACING 10 ML. PLASTIC SHEETING BETWEEN CONCRETE AND FITTING.

CONSTRUCTION NOTES:

A. CONCRETE THRUST BLOCK PLACED AGAINST SOLID UNDISTURBED SOIL.
B. PVC FITTING.
C. PIPE TRENCH.
D. 10 MIL. PLASTIC SHEETING.

E THRUST BLOCKS

NOT TO SCALE

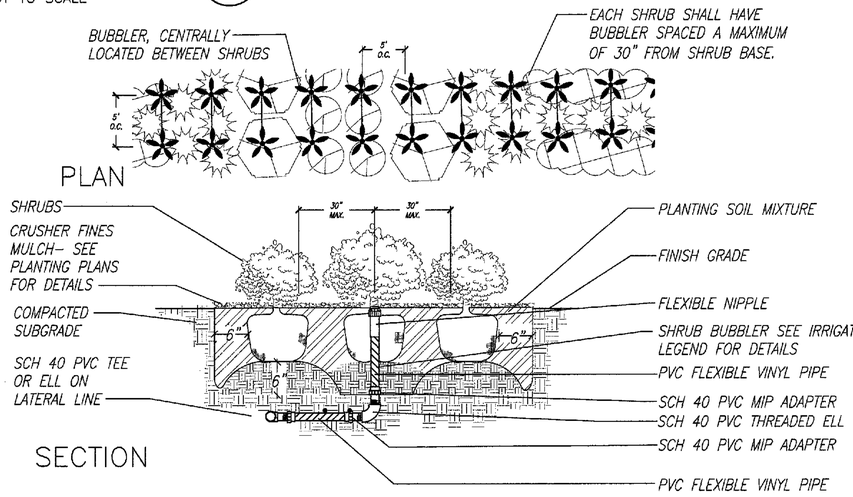

NOTE: SHRUBS SHOULD BE FLAGGED BEFORE IRRIGATION IS LAYED OUT.

F MULTI-SHRUB STREAM BUBBLER INSTALLATION

NOT TO SCALE

NO.	DESCRIPTION	DATE	BY
3			
2			
1			

REVISIONS (OR CHANGE NOTICES)

STATE OF NEW MEXICO
ROBERT L. OBERDORFER
REGISTERED
LANDSCAPE ARCHITECT

SCALE

CITY OF SANTA FE

CERRILLOS ROAD PHASE IIC
CAMINO CARLOS REY TO
LLANO STREET
SANTA FE COUNTY

IRRIGATION DETAILS

DESIGNED BY: KV & GR	DRAWN BY: KV,RO,AB	CHECKED BY:RO & GR
DATE: 07/18/14	DATE: 08/12/15	DATE: 08/12/15

P:\2014050_CerrillosRdPhII\4. Drawings\CAD Drawings\100pct REV-Aug 2015\DET.dwg Oct 12, 2015 - 2:02pm Saved By: roberdorfer

N.M. PROJECT NO. CN S100130 SHEET NO. 12-13

CITY OF SANTA FE	SHEET
NEW MEXICO PROJECT NO.	NO.
CN S100130	12–14

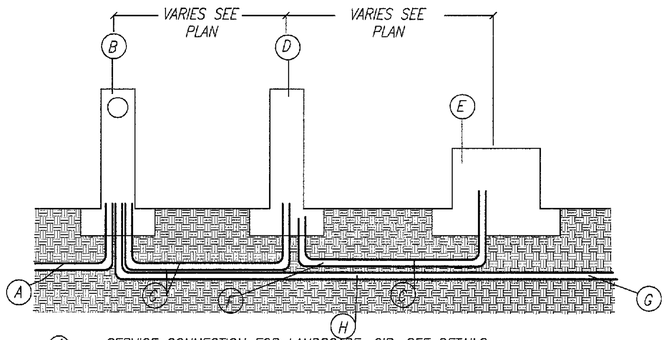

- (A) SERVICE CONNECTION FOR LANDSCAPE, CIP, SEE DETAILS
- (B) METER PEDESTAL FOR LANDSCAPE, CIP, SEE DETAILS
- (C) ELECTRICAL CONDUIT, 2" PVC, CIP
- (D) IRRIGATION CONTROLLER PEDESTAL, SEE SPECIFICATIONS/DETAILS
- (E) ENCLOSURE FOR FREEZE PROTECTION OF BACKFLOW PREVENTER, SEE SPECIFICATIONS/DETAILS
- (F) WIRE, 3 @ SINGLE CONDUCTOR # 10 AWG, CIP
- (G) TO BUS SHELTER LIGHTING DISCONNECT BOX TYP.
- (H) WIRE, 3 @ SINGLE CONDUCTOR #6 AWG, CIP

A ELECTRIC SERVICE FOR LANDSCAPE

NOT TO SCALE

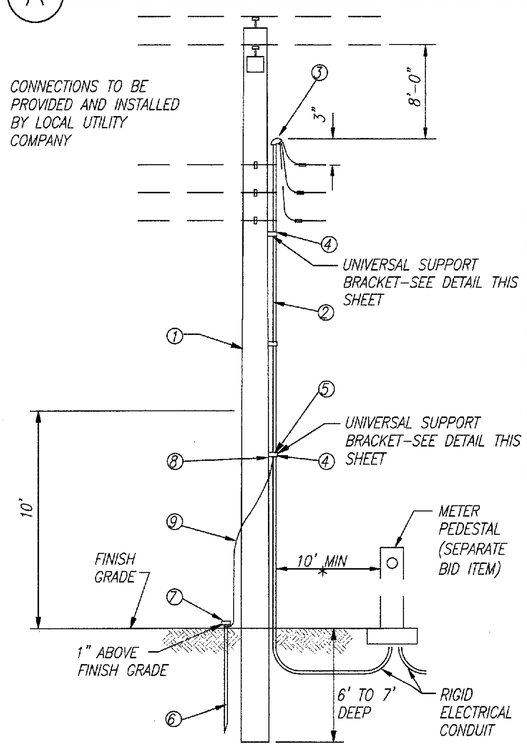

(1)	1	EXISTING POLE
(2)	40'	2" GALVANIZED CONDUIT
(3)	1	2" WEATHER HEAD
(4)	2	UNIVERSAL SUPPORT BRACKET
(5)	2	2" PIPE STRAP KIT
(6)	1	COPPERWELD 3/4"x10'–0" GROUND ROD
(7)	1	GROUND ROD CLAMP
(8)	1	GROUND LUG
(9)	10'	#6 BARE COPPER GROUND WIRE
	50'	1/C #2 THW BLACK
	50'	1/C #2 THW WHITE
	50'	1/C #2 THW RED

* CONDUIT AND WIRE EXTENDING MORE THAN 10' FROM POLE WILL BE MEASURED AND PAID PER ACTUAL FOOTAGE USED

C SERVICE RISER (LANDSCAPE)

NOT TO SCALE

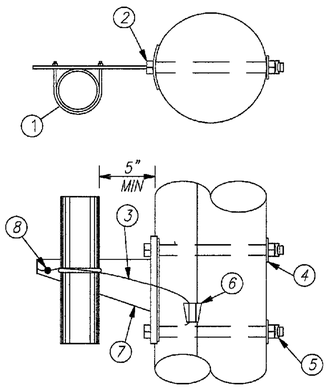

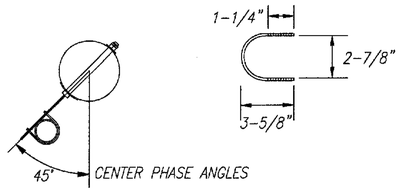

1. BRACKET TO BE FASTENED TO POLE WITH 5/8" GALVANIZED MACHINE BOLTS.
2. BRACKET SUITABLE FOR TWO 2" CONDUITS.
3. TWO HOLE STRAPS ATTACHED AT 30" INTERVALS WITH 2" LAG SCREWS MAY BE USED INSTEAD OF THE SUPPORT BRACKET WHEN THE CONDUIT IS 1" OR LESS. A MAXIMUM OF TWO CONDUITS MAY BE STRAPPED DIRECTLY TO THE POLE.

(1)	1	U BOLT
(2)	2	5/8" MACHINE BOLTS
(3)	3'	#4 SOLID COPPER WIRE
(4)	2	2–1/4" SQUARE WASHER
(5)	2	5/8" MF LOCKNUT
(6)	1	LINE TAP
(7)	1	SUPPORT BRACKET
(8)	1	GROUNDING LUG

B UNIVERSAL SUPPORT BRACKETS

NOT TO SCALE

SERVICE NOTES

1. ALL SERVICE DETAILS, MATERIALS, & INSTALLATION SHALL CONFORM TO THE LOCAL POWER COMPANY REQUIREMENTS.
2. CONTACT LOCAL POWER COMPANY CUSTOMER SERVICES FOR POLE QUADRANT FOR RISERS.
3. ALL ABOVE GRADE CONDUIT SHALL BE GALVANIZED.
4. RISER BRACKET ASSEMBLY MUST BE GROUNDED PER LOCAL POWER COMPANY REQUIREMENTS.
5. CONDUIT AND WIRE EXTENDING MORE THEN 10' FROM POLE WILL BE MEASURED AND PAID PER ACTUAL FOOTAGE USED.
6. UNIVERSAL SUPPORT BRACKETS WILL BE CONSIDERED INCIDENTAL.
7. DRILLING HOLES IN EXISTING STEEL POLES FOR UNIVERSAL SUPPORT BRACKETS WILL NOT BE PERMITTED. BRACKETS SHALL BE MOUNTED ON STEEL POLES WITH STAINLESS STEEL BANDS.
8. PROVIDE ONE 100A, SINGLE POLE, 120V CIRCUIT PER IRRIGATION CONTROLLER, BACKFLOW PREVENTER HEAT TAPE AND BUS SHELTER SERVICE. FOR ADDITIONAL SERVICE DETAILS PLEASE SEE PAGE 12–15.
9. REFERENCE ELECTRICAL PLANS FOR POWER DROP LOCATIONS.

NO.	DESCRIPTION	DATE	BY
3			
2			
1			

REVISIONS (OR CHANGE NOTICES)

STATE OF NEW MEXICO
ROBERT M. ROBERDORFER
007
REGISTERED LANDSCAPE ARCHITECT

SCALE

CITY OF SANTA FE

CERRILLOS ROAD PHASE IIC
CAMINO CARLOS REY TO
LLANO STREET
SANTA FE COUNTY

ELECTRICAL SERVICE,
LANDSCAPE METER AND PULL
BOX DETAILS FOR LANDSCAPE

DESIGNED BY: KV & GR	DRAWN BY: KV,RO,AB	CHECKED BY:RO & GR
DATE: 07/18/14	DATE: 08/12/15	DATE: 08/12/15

CITY OF SANTA FE	SHEET
NEW MEXICO PROJECT NO.	NO.
CN S100130	12–15

☒ 12 GA HD GALVANIZED SHEET STEEL
☒ POWDER COATED

☐ 14 GA #304D STAINLESS STEEL SHEET
☐ POWDER COATED COLOR:
☐ NATURAL

☐ 0.125" ALUMINUM SHEET
☐ POWDER COATED COLOR:
☐ ANODIZED

POWDER COAT COLORS

☐ WHITE ☐ RANCH GREEN
☐ MINT GREEN ☒ OTHER — SUBMIT SAMPLE– COLOR TO MATCH LIGHTING POLES
☐ CAMEL — MEDIUM BRONZE

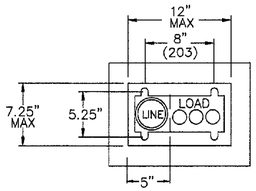

BASE PLAN

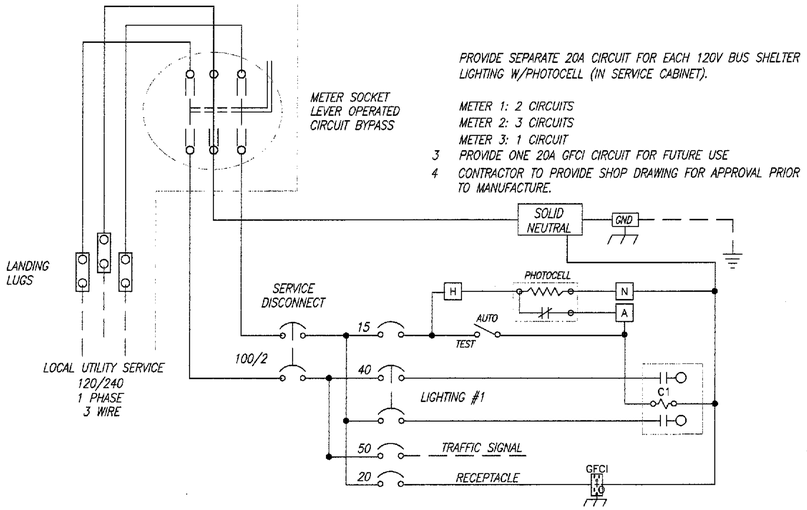

PROVIDE SEPARATE 20A CIRCUIT FOR EACH 120V BUS SHELTER LIGHTING W/PHOTOCELL (IN SERVICE CABINET).

METER 1: 2 CIRCUITS
METER 2: 3 CIRCUITS
METER 3: 1 CIRCUIT

3 PROVIDE ONE 20A GFCI CIRCUIT FOR FUTURE USE
4 CONTRACTOR TO PROVIDE SHOP DRAWING FOR APPROVAL PRIOR TO MANUFACTURE.

SERVICE EQUIPMENT WIRING DIAGRAM "B"

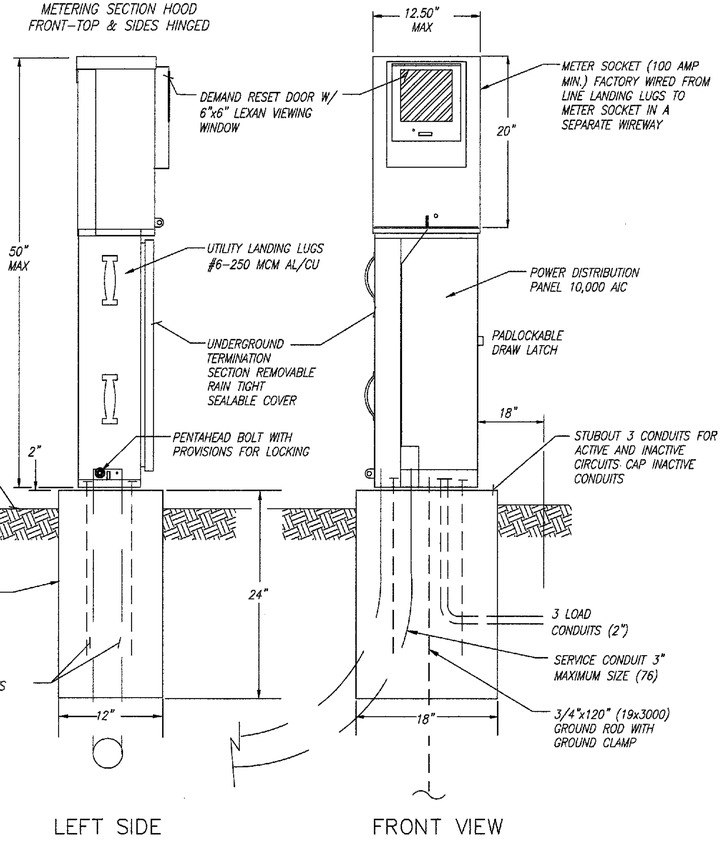

D METER PEDESTAL

NOT TO SCALE

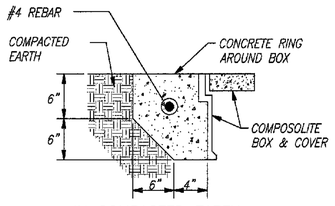

IN COMPACTED EARTH

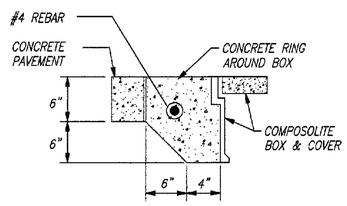

IN CONCRETE PAVEMENTS

CONCRETE COLLAR DETAIL

NOTE: THE CONCRETE COLLAR FOR THE PULL BOXES WILL BE PAID FOR UNDER THE CONTRACT ITEM FOR ELECTRICAL PULL BOX AND NO OTHER MEASUREMENT OR PAYMENT WILL BE MADE THEREFOR.

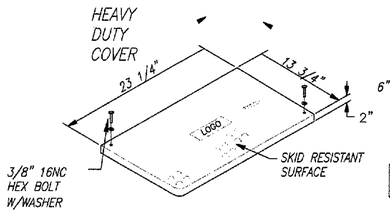

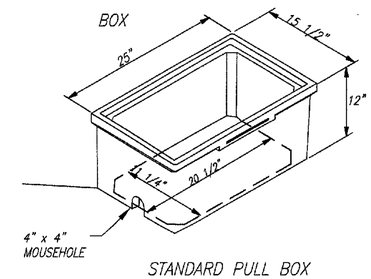

STANDARD PULL BOX

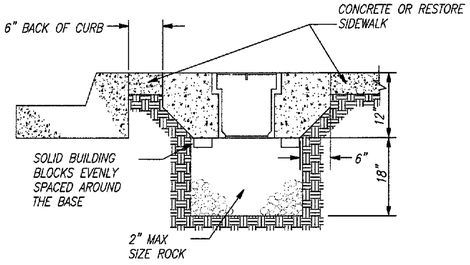

TYPICAL PULL BOX INSTALLATION
NOTE: SEE "CONCRETE COLLAR DETAILS"

E PULL BOX

NOT TO SCALE

METER PEDESTAL CONSTRUCTION NOTES

1. METER PEDESTAL SHALL BE UL LISTED "INDUSTRIAL CONTROL PANEL" PER UL 508.
2. METER PEDESTAL SHALL MEET THE ELECTRIC UTILITY SERVICE EQUIPMENT REQUIREMENTS COMMITTEE (EUSERC) GUIDELINES.
3. CONSTRUCTION SHALL BE NEMA 3R AND 12, RAIN TIGHT AND DUST TIGHT. ELECTRICALLY WELDED AND REINFORCED WHERE REQUIRED.
4. ALL NUTS, BOLTS, SCREWS AND HINGES SHALL BE STAINLESS STEEL.
5. NUTS, BOLTS, AND SCREWS SHALL NOT BE VISIBLE FROM OUTSIDE OF METER PEDESTAL.
6. PHENOLIC NAME PLATES SHALL BE PROVIDED AS REQUIRED.
7. CIRCUIT BREAKERS SHALL BE CABLE IN–CABLE OUT WITH LINE ON TOP & LOAD ON THE BOTTOM. HANDLE POSITION UP="ON", MIDDLE="TRIPPED", DOWN="OFF".
8. A PLASTIC COVERED WIRING DIAGRAM SHALL BE ATTACHED TO THE INSIDE OF THE FRONT DOOR.
9. METER PEDESTAL SHALL BE FACTORY WIRED AND CONFORM TO REQUIRED NEMA STANDARDS.
10. ALL POWDER COATED METER PEDESTAL SHALL HAVE A CORROSION RESISTANT COATING WHICH INCLUDES A FIVE STEP DIP TANK METAL PREPARATION PROCESS:
    A. ALKALINE CLEANER 160° F.
    B. CLEAR WATER RINSE.
    C. IRON PHOSPHATE APPLICATION 150°.
    D. CLEAR WATER RINSE.
    E. INHIBITIVE RINSE TO SEAL PHOSPHATED SURFACES 120°.

    FINISHED WITH AN ELECTROSTATICALLY APPLIED DRY POLYESTER POWDER COATING THEN BAKED @ 380° TO CURE.
11. CONCRETE FOUNDATIONS INCLUDING EXCAVATION AND BACKFILL, CONCRETE, AND ANCHOR BOLTS, COMPLETE–IN PLACE, WILL BE CONSIDERED INCIDENTAL TO THE METER PEDESTAL.

NOTES FOR HEAVY DUTY REINFORCED POLYMER MORTAR PULL BOX AND COVERS

1. MATERIAL TO BE AN AGGREGATE CONSISTING OF SAND AND GRAVEL BOUND TOGETHER WITH A POLYMER AND REINFORCED WITH CONTINUOUS WOVEN GLASS STRANDS. THE MATERIAL MUST HAVE THE FOLLOWING MECHANICAL PROPERTIES: COMPRESSIVE STRENGTH – 11,000 PSI, TENSILE STRENGTH – 1,700 PSI, FLEXURAL STRENGTH – 7,500 PSI.
2. ALL PULL BOX COVERS SHALL BE HEAVY DUTY REINFORCED POLYMER MORTAR, HAVING A SERVICE LOAD OF 22,568 LBS. OVER 10" SQUARE (225 PSI).
3. PULL BOX TYPE AND LOGO SHALL BE APPROVED BY THE PROJECT MANAGER.
4. THE DIMENSIONS OF THE PULL BOXES SHOWN ARE NOMINAL DIMENSIONS AND MAY VARY AS TO THE MANUFACTURER'S RECOMENDATIONS. ALL DIMENSIONS SHALL BE VERIFIED BY THE PROJECT MANAGER.
5. ELECTRICAL PULL BOX (STANDARD) SHALL BE A HEAVY DUTY REINFORCED POLYMER MORTAR PULL BOX AND COVER MEASURING 13 3/4" X 23 1/4" X 2".

NO.	DESCRIPTION	DATE	BY
3			
2			
1			

REVISIONS (OR CHANGE NOTICES)

STATE OF NEW MEXICO — ROBERT M. ROBERDORFER — 12647 — REGISTERED LANDSCAPE ARCHITECT

SCALE

CITY OF SANTA FE

CERRILLOS ROAD PHASE IIC
CAMINO CARLOS REY TO
LLANO STREET
SANTA FE COUNTY

ELECTRICAL SERVICE,
LANDSCAPE METER AND PULL
BOX DETAILS FOR LANDSCAPE

DESIGNED BY: KV & GR	DRAWN BY: KV,RO,AB	CHECKED BY:RO & GR
DATE: 07/18/14	DATE: 08/12/15	DATE: 08/12/15

P:\2014050_CerrillosRdPhII\4. Drawings\CAD Drawings\100pct REV–Aug 2015\DET.dwg Oct 12, 2015 – 2:03pm Saved By: roberdorfer

N.M. PROJECT NO. CN S100130 SHEET NO. 12–15

CITY OF SANTA FE	SHEET
NEW MEXICO PROJECT NO.	NO.
CN S100130	12-16

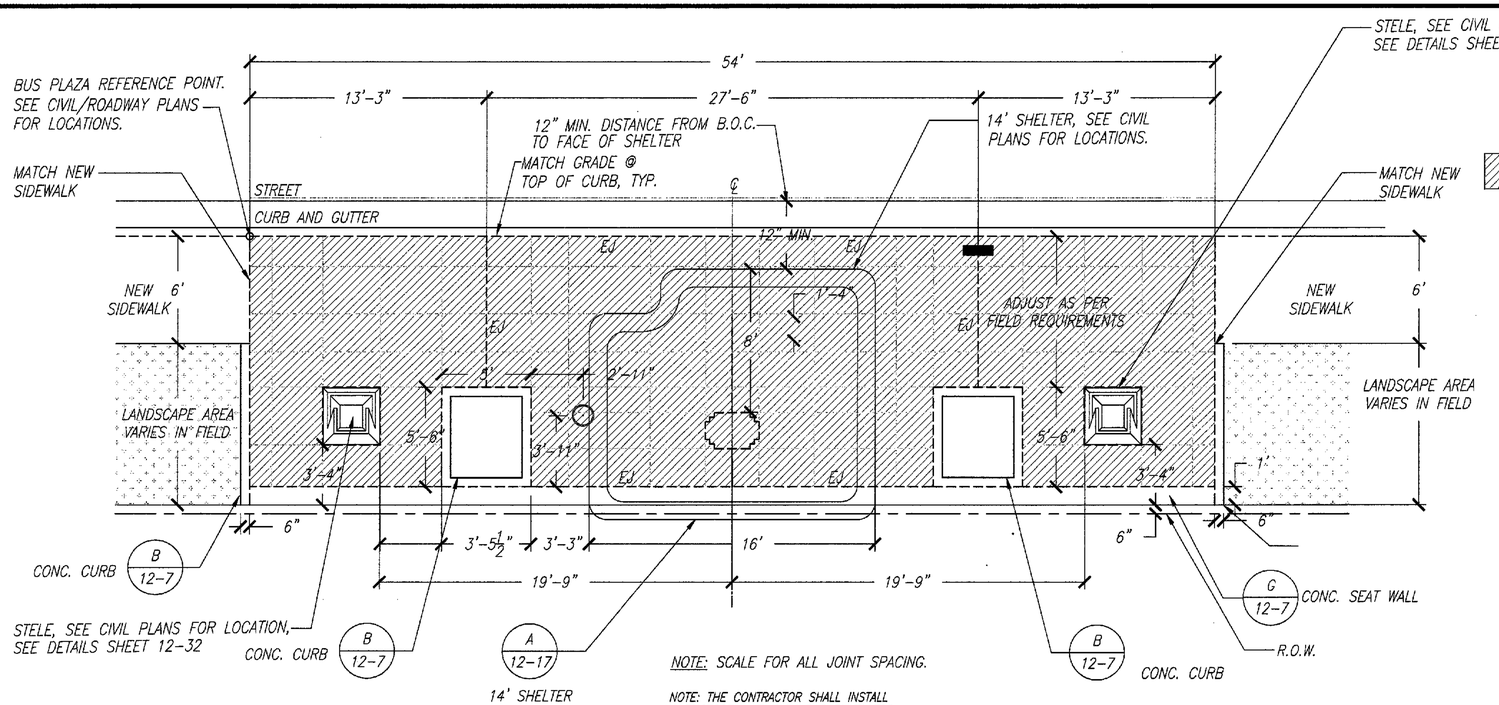

NOTE: SCALE FOR ALL JOINT SPACING.

NOTE: THE CONTRACTOR SHALL INSTALL A PHOTOCELL AT EACH BUS PLAZA FOR THE BUS PLAZA LIGHTING SYSTEM. THE PHOTOCELL SHALL BE INCIDENTAL TO THE BUS SHELTER.

LEGEND:

3000 PSI CONCRETE SIDEWALK WITH INTEGRAL COLOR.

SCOFIELD INTEGRAL SUN BAKED CLAY OR EQUAL, EXPOSED AGGREGATE FINISH, 3/8" INTEGRAL AGGREGATE. SEAL WITH W1000 CLEAR -CURE AND SEALER.

SUBMIT CONCRETE COLOR SAMPLE TO OWNER'S REPRESENTATIVE FOR REVIEW.

PROVIDE TIMBERFORM TRASH RECEPTACLE, MODEL 2894-AT-E, COLOR: WHITE, IN-GROUND MOUNT. INSTALL PER DRAWING DIMENSIONS ARE NOTED TO CENTER LINE OF TRASH RECEPTACLE.

BUS STOP SIGN: TO BE LOCATED IN EACH PLAZA AT THE FRONT END OF THE BUS PLAZA. THIS LOCATION CHANGES DEPENDING ON DIRECTION OF TRAFFIC.

EXPANSION JOINT (EJ)

GENERAL NOTES:

1. ONE STELE PER SHELTER LOCATION. SEE PLANS FOR LOCATION. ALL ITEMS ON BUS PLAZA DETAIL SHALL BE INCIDENTAL TO PLAZA CONSTRUCTION.

2. CONCRETE PLAZA TO EXTEND FROM CONCRETE SEAT WALL (LOCATED 6" OFF R.O.W.) TO CURB AND GUTTER. DIMENSION WILL VARY IN FIELD.

3. CONTRACTOR TO STAKE OUT R.O.W. IN FIELD.

(A) PEDESTRIAN BUS PLAZA WITH 14' SHELTER

SCALE: 1/4" = 1'-0"

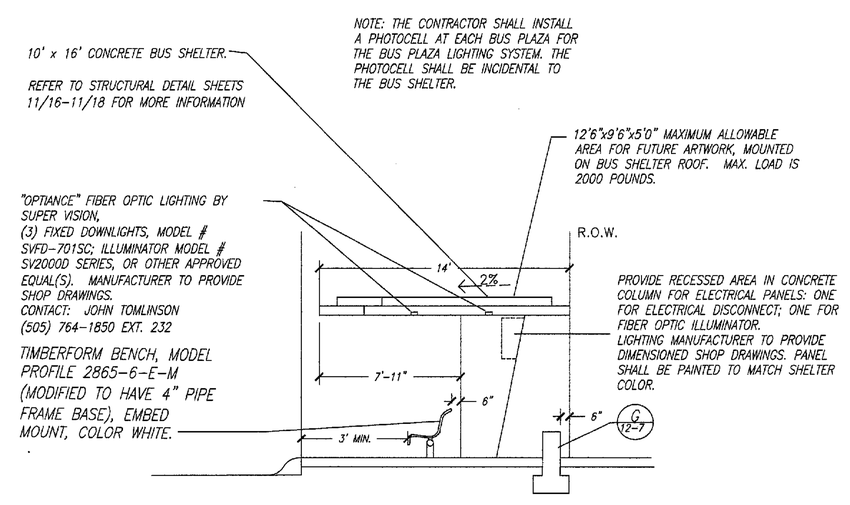

(H) PEDESTRIAN BUS PLAZA WITH 14' SHELTER - SIDE ELEVATION

NOT TO SCALE

CONCRETE BUS SHETLER FINISH NOTES:

1. FINISH ON THE HORIZONTAL ROOF SURFACES OF THE STRUCTURE IS TO BE STEEL TROWELLED.
2. THE FINISH ON ALL OTHER SURFACES SHALL BE STRIPPED FROM FORM.
3. ALL VERTICAL CONCRETE (STELE AND BUS SHELTER) SHALL BE RUBBED OUT WITH A CARBONIUM STONE AFTER FORMS ARE STRIPPED. SNAP TIE HOLES TO BE LEFT INTACT AND UNFILLED DUE TO THE DIFFICULTY IN MATCHING INTEGRAL COLOR CONCRETE COLORING. PATCHING WILL NOT BE PERMITTED.
4. A SUPER PLASTICIZER SHALL BE USED IN THE CONCRETE MIX. USE DARACEM 19 AT 17 FL OZ PER 100 LBS OF CEMENT OR 8" SLUMP.

CONCRETE POUR SAMPLES REQUESTED:

1. ONE FULL SIZE REVEAL LETTER
2. COLD JOINT BETWEEN VERTICAL SUPPORT AND ROOF STRUCTURE.
3. 3 CONTINUOUS FEET OF ONE SIDE OF THE VERTICAL SUPPORT.
4. FULL EXAMPLE OF DOUBLE LAYER COMPOUND CURVE IN ROOF STRUCTURE.

NOTE: PROVISION OF ELECTRICAL POWER, CONDUIT, PULL BOXES, AND CONDUCTOR CABLE SHALL BE CONSIDERED INCIDENTAL TO THE BUS SHELTERS. PROVISION OF CONDUIT, PULL BOXES AND CONDUCTOR CABLE SHALL BE CONSIDERED INCIDENTAL TO ELECTRICAL POWER FOR THE IRRIGATION SYSTEM.
CONTRACTOR SHALL COORDINATE WITH PNM TO LOCATE POWER SOURCES.

NO.	DESCRIPTION	DATE	BY
3			
2			
1			

REVISIONS (OR CHANGE NOTICES)

STATE OF NEW MEXICO — ROBERT G. ROBERDORFER — 167 — REGISTERED LANDSCAPE ARCHITECT

SCALE

CITY OF SANTA FE

CERRILLOS ROAD PHASE IIC
CAMINO CARLOS REY TO
LLANO STREET
SANTA FE COUNTY

PEDESTRIAN PLAZA AND BUS STATION DETAILS

DESIGNED BY: KV & GR	DRAWN BY: KV,RO,AB	CHECKED BY:RO & GR
DATE: 07/18/14	DATE: 08/12/15	DATE: 08/12/15

P:\2014050_CerrillosRdPhII\4. Drawings\CAD Drawings\100pct REV-Aug 2015\DET.dwg Oct 12, 2015 - 2:04pm Saved By: roberdorfer

N.M. PROJECT NO. CN S100130 SHEET NO. 12-16

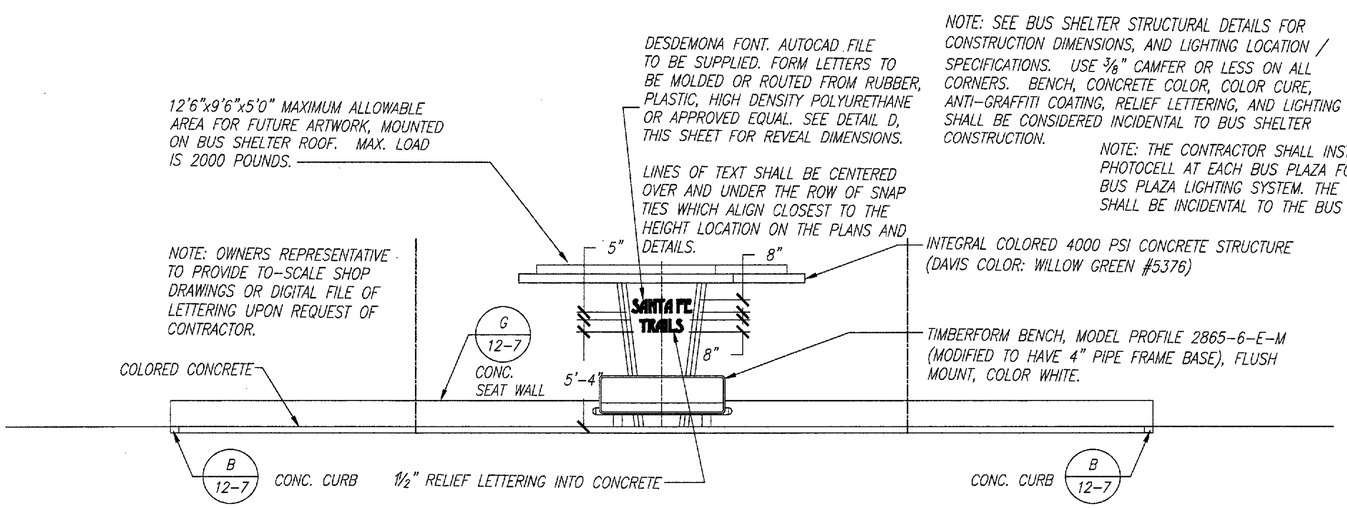

A PEDESTRIAN BUS PLAZA WITH SHELTER

NOT TO SCALE

CONCRETE BUS SHETLER FINISH NOTES:

1. FINISH ON THE HORIZONTAL ROOF SURFACES OF THE STRUCTURE IS TO BE STEEL TROWELLED.
2. THE FINISH ON ALL OTHER SURFACES SHALL BE STRIPPED FROM FORM.
3. ALL VERTICAL CONCRETE (STELE AND BUS SHELTER) SHALL BE RUBBED OUT WITH A CARBONIUM STONE AFTER FORMS ARE STRIPPED. SNAP TIE HOLES TO BE LEFT INTACT AND UNFILLED DUE TO THE DIFFICULTY IN MATCHING INTEGRAL COLOR CONCRETE COLORING. PATCHING WILL NOT BE PERMITTED.
4. A SUPER PLASTICIZER SHALL BE USED IN THE CONCRETE MIX. USE DARACEM 19 AT 17 FL OZ PER 100 LBS OF CEMENT OR 8" SLUMP.

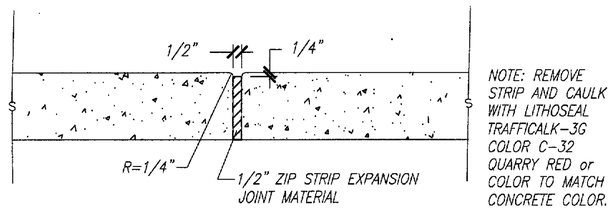

B EXPANSION JOINT AT COLORED CONCRETE PAVING

NOT TO SCALE

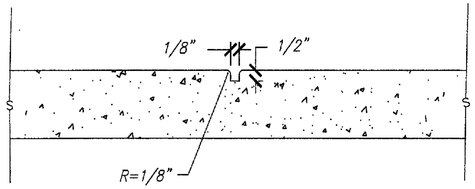

CONCRETE POUR SAMPLES REQUESTED:

1. ONE FULL SIZE REVEAL LETTER
2. COLD JOINT BETWEEN VERTICAL SUPPORT AND ROOF STRUCTURE.
3. 3 CONTINUOUS FEET OF ONE SIDE OF THE VERTICAL SUPPORT.
4. FULL EXAMPLE OF DOUBLE LAYER COMPOUND CURVE IN ROOF STRUCTURE.

C CONTROL JOINT

NOT TO SCALE

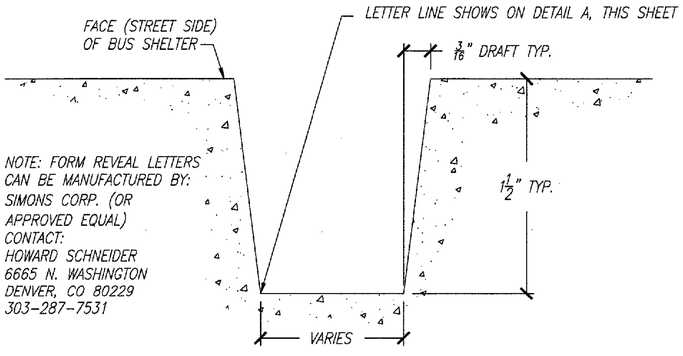

D SHELTER LETTER DETAIL

SCALE: 2" = 1'-0"

CITY OF SANTA FE	SHEET
NEW MEXICO PROJECT NO.	NO.
CN S100130	12-17

NO.	DESCRIPTION	DATE	BY
3			
2			
1			

REVISIONS (OR CHANGE NOTICES)

STATE OF NEW MEXICO — ROBERT L. ROERDORFER — 167 — REGISTERED LANDSCAPE ARCHITECT

SCALE

CITY OF SANTA FE

CERRILLOS ROAD PHASE IIC
CAMINO CARLOS REY TO
LLANO STREET
SANTA FE COUNTY

PEDESTRIAN PLAZA AND BUS STATION DETAILS

DESIGNED BY: KV & GR	DRAWN BY: KV,RO,AB	CHECKED BY:RO & GR
DATE: 07/18/14	DATE: 08/12/15	DATE: 08/12/15

CITY OF SANTA FE	SHEET
NEW MEXICO PROJECT NO.	NO.
CN S100130	12-18

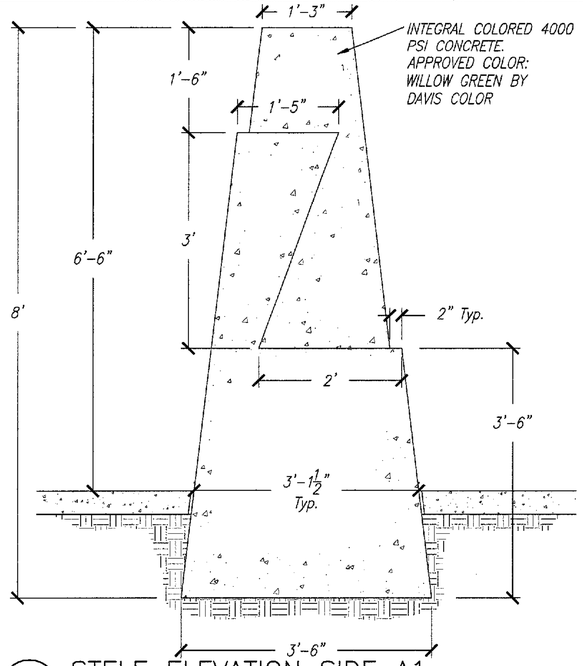

A STELE ELEVATION SIDE A1

SCALE: 1" = 1'-0"

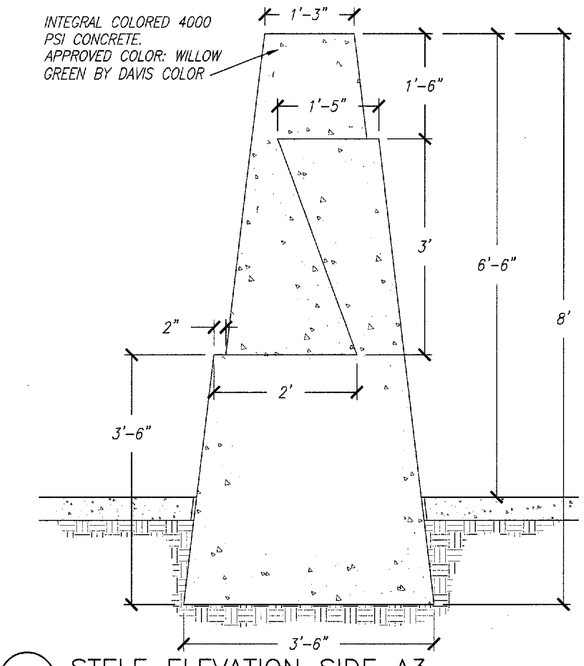

C STELE ELEVATION SIDE A3

SCALE: 1" = 1'-0"

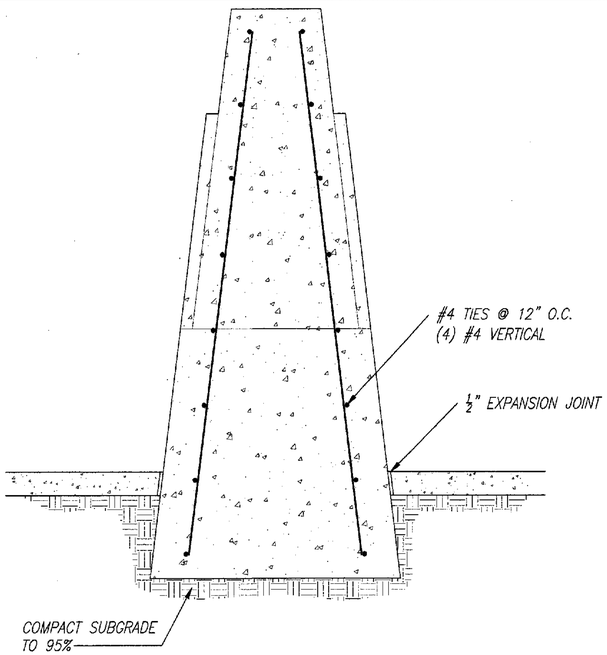

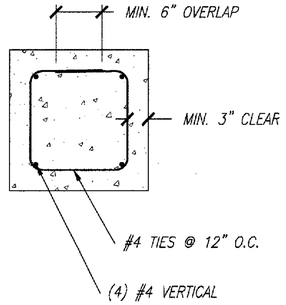

E STELE SECTION DETAIL

SCALE: 1" = 1'-0"

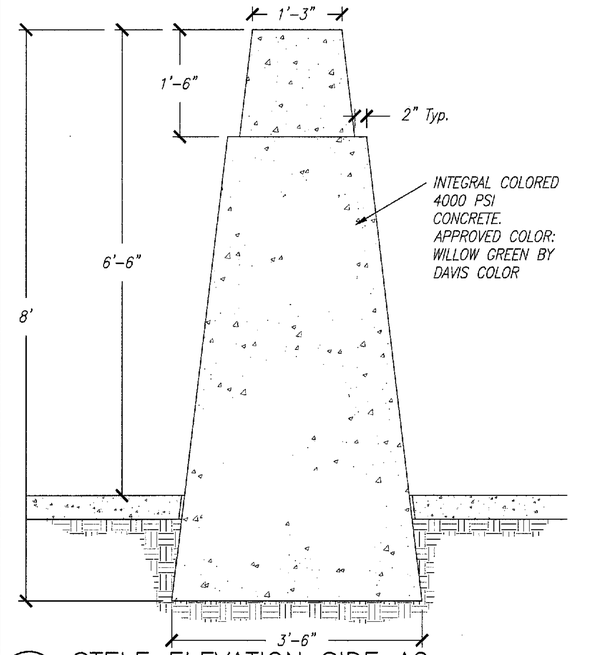

B STELE ELEVATION SIDE A2

SCALE: 1" = 1'-0"

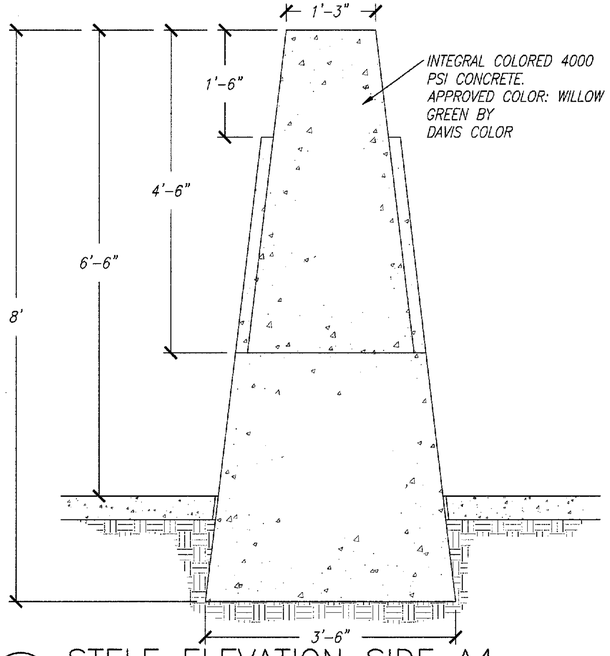

D STELE ELEVATION SIDE A4

SCALE: 1" = 1'-0"

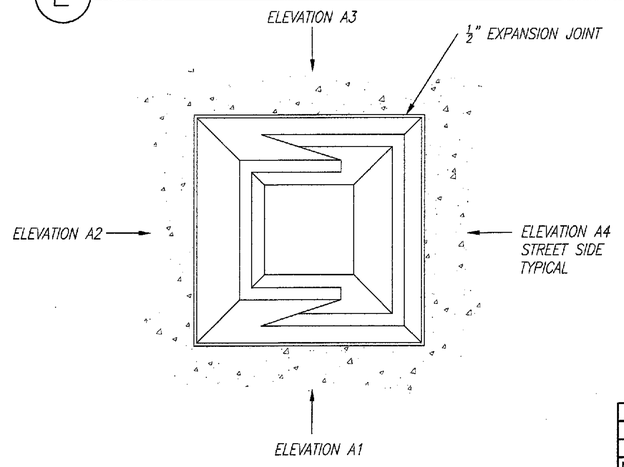

F STELE PLAN ELEVATION LEGEND

SCALE: 1" = 1'-0"

NO.	DESCRIPTION	DATE	BY
3			
2			
1			

REVISIONS (OR CHANGE NOTICES)

CITY OF SANTA FE

CERRILLOS ROAD PHASE IIC
CAMINO CARLOS REY TO
LLANO STREET
SANTA FE COUNTY

STELE DETAILS

SCALE

DESIGNED BY: KV & GR	DRAWN BY: KV,RO,AB	CHECKED BY:RO & GR
DATE: 07/18/14	DATE: 08/12/15	DATE: 08/12/15

P:\2014050_CerrillosRdPhil\4. Drawings\CAD Drawings\100pct REV-Aug 2015\DET.dwg Oct 12, 2015 - 2:05pm Saved By: roberdorfer

N.M. PROJECT NO. CN S100130 SHEET NO. 12-18

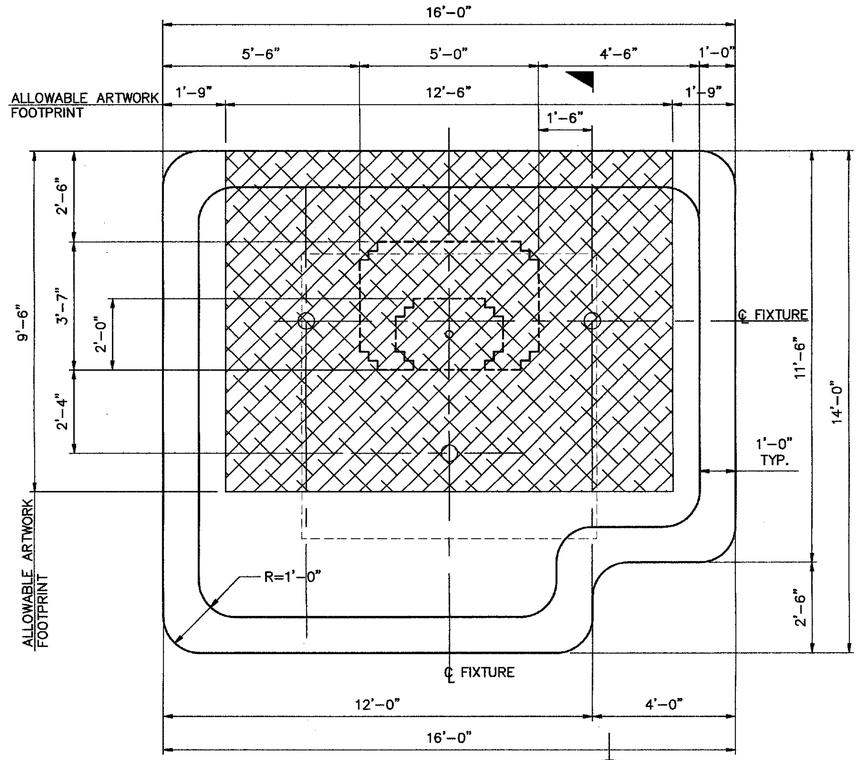

PLAN A

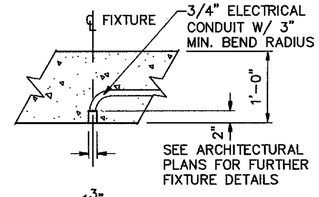

SECTION FIXTURE DETAIL A

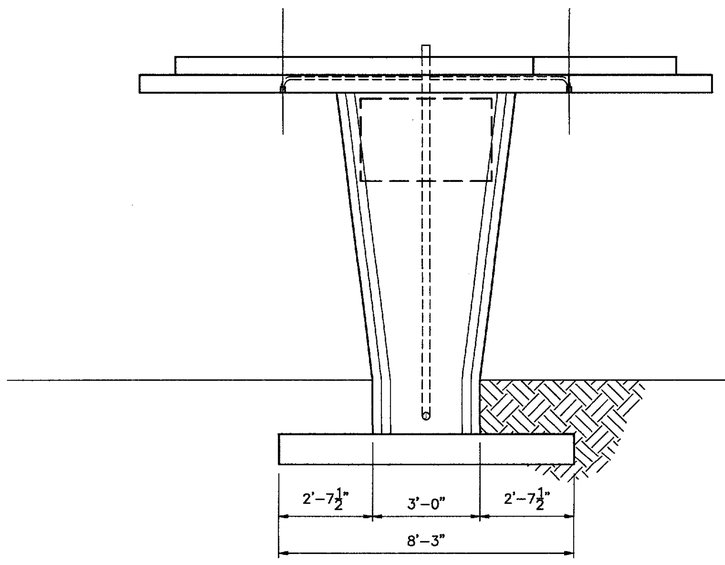

FRONT ELEVATION

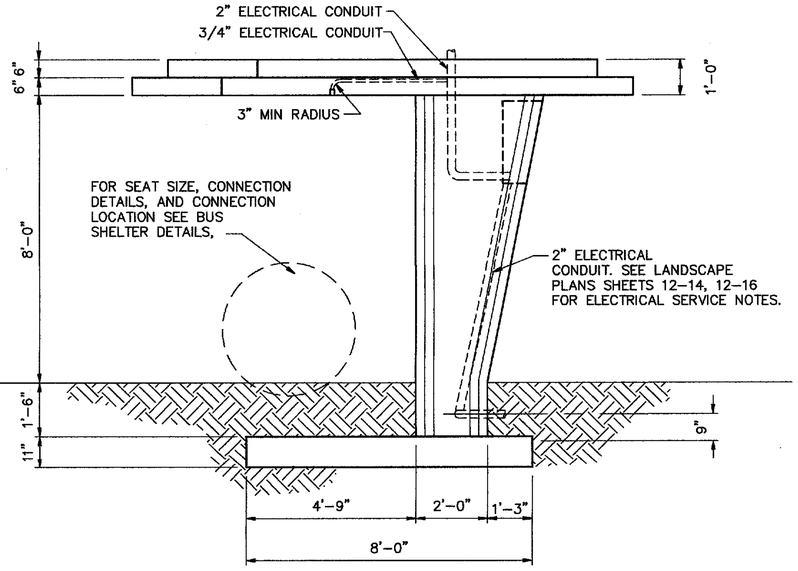

SIDE ELEVATION

NOTES:

1. ALL CONCRETE SHALL BE CLASS A.
2. INTEGRAL COLORED FINISH: NATURAL AND SYNTHETIC IRON OXIDES PIGMENTS. COLOR AS SPECIFIED ON DRAWINGS SUBJECT TO APPROVAL OF 3'x3' FIELD SAMPLE.
   PRODUCTS: SUBJECT TO COMPLIANCE WITH REQUIREMENTS, PROVIDE THE FOLLOWING:
   BOMANITE INTEGRAL COLOR
   BOMANITE COLOR HARDENER OR APPROVED EQUAL.
   BOMANITE COLOR CURE OR APPROVED EQUAL.
3. REINFORCING BARS SHALL BE GRADE 60. MAINTAIN 2" MINIMUM CONCRETE COVER OVER BARS UNLESS NOTED OTHERWISE.
4. INSTALLING EMBEDDED ITEMS: SET AND BUILD INTO FORM WORK ANCHORAGE DEVICES AND OTHER EMBEDDED ITEMS REQUIRED FOR OTHER WORK THAT IS ATTACHED TO OR SUPPORTED BY CAST-IN-PLACE CONCRETE. USE SETTING DRAWINGS, DIAGRAMS, INSTRUCTIONS, AND MANUFACTURERS RECOMMENDATIONS OF ITEMS TO BE ATTACHED.

*ESTIMATED QUANTITES			
ITEM NO.	ITEM	UNIT	TOTAL
511000	STRUCTURAL CONCRETE CLASS A	CU.YD.	13.1
540065	REINFORCING BARS GRADE 60	LB	1640

*NOTE: ESTIMATED BUS SHELTER QUANTITIES FOR STRUCTURAL CONCRETE CLASS A AND REINFORCING BARS GRADE 60 ARE SHOWN FOR CONTRACTOR'S INFORMATION ONLY. ITEMS ARE BEING PAID FOR UNDER ITEM 664000, LANDSCAPE, COMPLETE (LUMP SUM) AND NO SEPERATE MEASUREMENT OR PAYMENT WILL BE MADE THEREFOR.

JAMES H. BUCKMAN NEW MEXICO 13062 REGISTERED PROFESSIONAL ENGINEER 10/26/15

NO.	DESCRIPTION	DATE	BY
3			
2			
1			

REVISIONS (OR CHANGE NOTICES)

CITY OF SANTA FE

CERRILLOS ROAD PHASE IIC
CAMINO CARLOS REY TO
LLANO STREET
SANTA FE COUNTY
14' BUS SHELTER
STRUCTURAL
PLAN AND ELEVATIONS

SCALE

DESIGNED BY: PB	DRAWN BY: PB	CHECKED BY: JB
DATE: 08/07/15	DATE: 08/07/15	DATE: 08/07/15

PARSONS BRINCKERHOFF

CITY OF SANTA FE	SHEET
NEW MEXICO PROJECT NO.	NO.
CN S100130	12-19

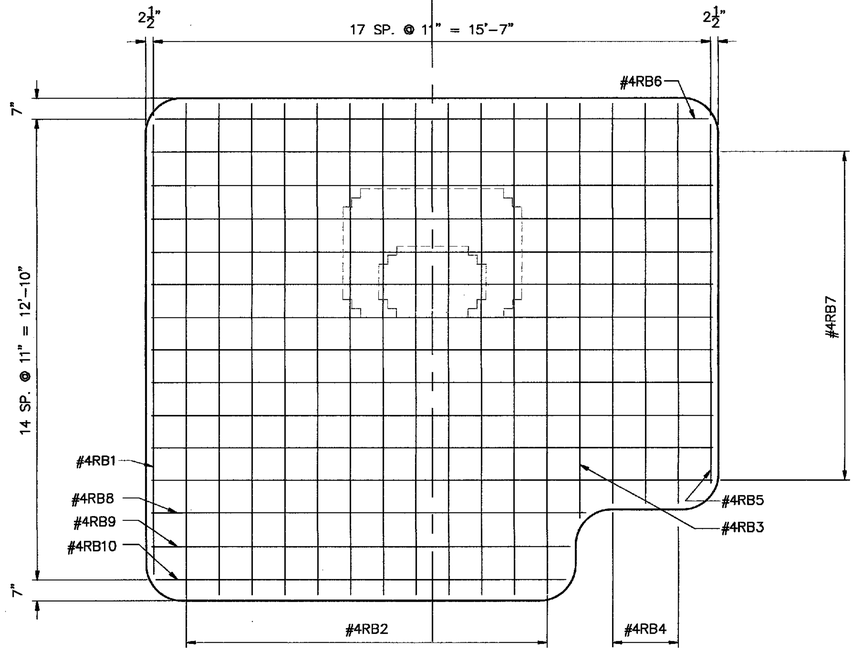

BOTTOM MAT

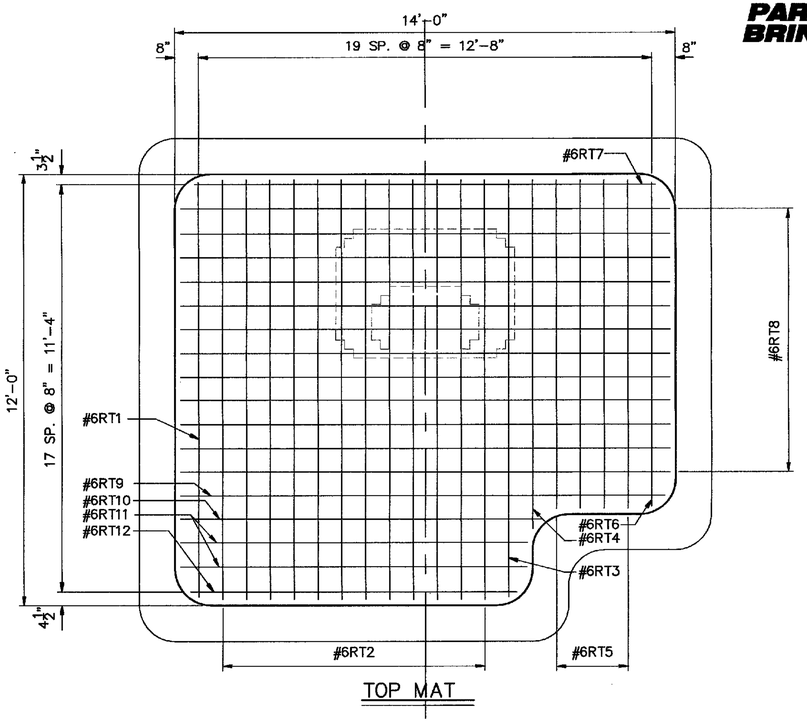

TOP MAT

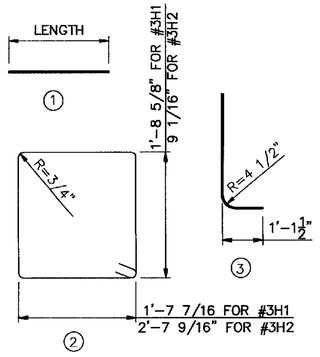

BAR BENDING DIAGRAM

REINFORCING STEEL FOR 14' BUS SHELTER			
REGULAR GRADE 60 BARS			
BAR	TYPE	LENGTH	# REQ'D
#4RB1	1	12' -6 1/4 "	1
#4RB2	1	13' -8"	12
#4RB3	1	11' -6 3/4 "	1
#4RB4	1	11' -2"	3
#4RB5	1	10' -0 1/4 "	1
#4RB6	1	15' -5 1/4 "	1
#4RB7	1	15' -8"	11
#4RB8	1	12' -1 1/4 "	1
#4RB9	1	11' -8"	1
#4RB10	1	11' -5 1/4 "	1
#6RT1	1	11' -6 1/4 "	1
#6RT2	1	11' -8"	12
#6RT3	1	11' -7 1/8 "	1
#6RT4	1	9' -8 3/4 "	1
#6RT5	1	9' -2"	4
#6RT6	1	9' -0"	1
#6RT7	1	12' -10 1/2 "	1
#6RT8	1	13' -8"	12
#6RT9	1	13' -6 3/8 "	1
#6RT10	1	10' -0 3/4 "	1
#6RT11	1	9' -8 1/4 "	2
#6RT12	1	9' -1 1/4 "	1
#3H1	2	6' -10 5/8 "	10
#3H2	2	7' -0 7/8 "	10
#6CM1	3	11' -3 1/2 "	20
#6CM2	3	4' -3 3/4 "	20
#4CT1	1	6' -11 5/8 "	5
#4CT2	1	10' -4 1/4 "	8
#4CT3	1	10' -4 7/8 "	6
#4CT4	1	4' -0 1/8 "	1 EA.
THRU	1	BY 3"	
#4CT10	1	2' -6" 1/8	
#4CT11	1	3' -5 5/8 "	1
#4CT12	1	3' -2 5/8 "	1
#4CT13	1	2' -11 5/8 "	1

PARSONS BRINCKERHOFF

CITY OF SANTA FE	SHEET
NEW MEXICO PROJECT NO.	NO.
CN S100130	12-20

NO.	DESCRIPTION	DATE	BY
3			
2			
1			

REVISIONS (OR CHANGE NOTICES)

JAMES H. BUCKMAN NEW MEXICO 13062 REGISTERED PROFESSIONAL ENGINEER 10/7/15

CITY OF SANTA FE

CERRILLOS ROAD PHASE IIC
CAMINO CARLOS REY TO
LLANO STREET
SANTA FE COUNTY
14' BUS SHELTER
STRUCTURAL
ROOF AND COLUMN DETAILS

SCALE

DESIGNED BY: PB	DRAWN BY: PB	CHECKED BY: JB
DATE: 08/07/15	DATE: 08/07/15	DATE: 08/07/15

J:\33693 Cerrillos Ph IIC\04 Engineering-33693\Plans\12_Sheets\12-19 to12-21 BusSheltStrucPlanElev.dwg Oct 06, 2015 - 3:12pm Saved By: millernz

N.M. PROJECT NO. CN S100130 SHEET NO. 12-20

PARSONS BRINCKERHOFF

CITY OF SANTA FE	SHEET
NEW MEXICO PROJECT NO.	NO.
CN S100130	12–21

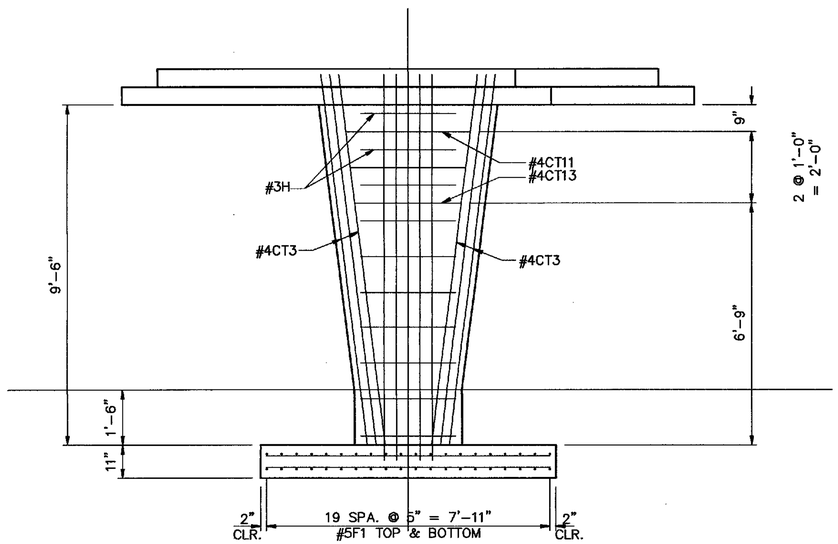

FRONT FACE ELEVATION

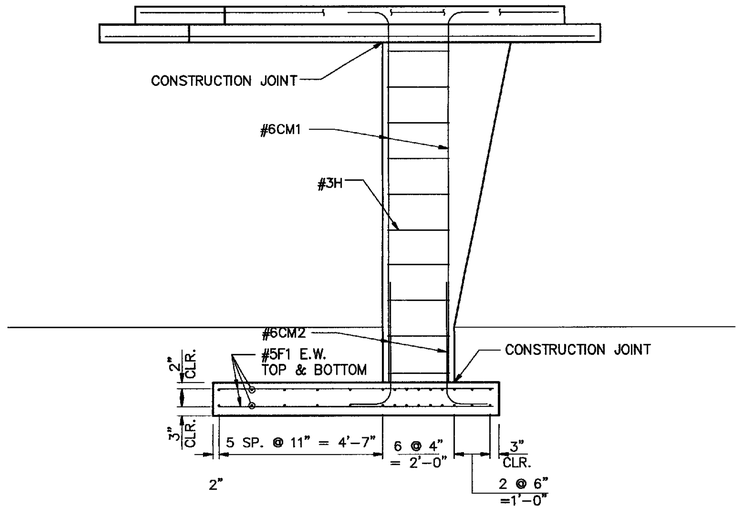

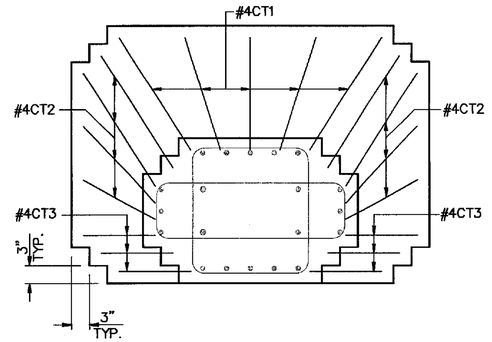

COLUMN SECTION NEAR ROOF

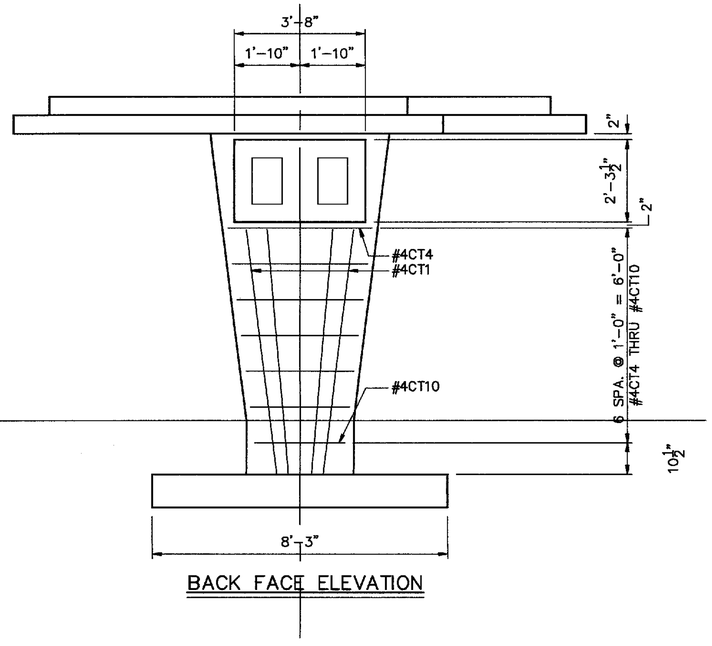

BACK FACE ELEVATION

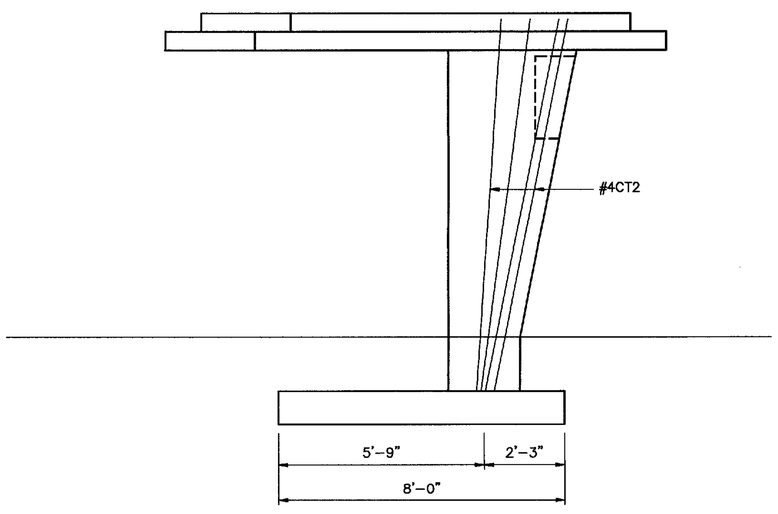

SIDE ELEVATION

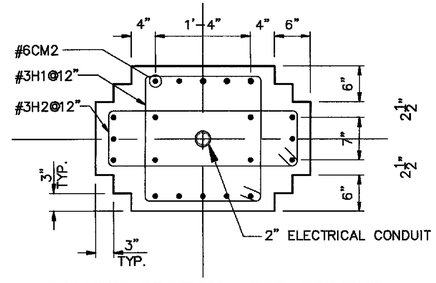

COLUMN SECTION NEAR FOOTING

NO.	DESCRIPTION	DATE	BY
3			
2			
1			

REVISIONS (OR CHANGE NOTICES)

JAMES H. BUCKMAN NEW MEXICO 13062 REGISTERED PROFESSIONAL ENGINEER (07/8/15)

CITY OF SANTA FE

CERRILLOS ROAD PHASE IIC
CAMINO CARLOS REY TO
LLANO STREET
SANTA FE COUNTY
14' BUS SHELTER
STRUCTURAL
ELEVATIONS & COLUMN DETAILS

SCALE

DESIGNED BY: PB	DRAWN BY: PB	CHECKED BY: JB
DATE: 08/07/15	DATE: 08/07/15	DATE: 08/07/15

J:\33693 Cerrillos Ph IIC\04 Engineering-33693\Plans\12_Sheets\12-19 to12-21 BusSheltStrucPlanElev.dwg Oct 06, 2015 – 3:13pm Saved By: millernz

N.M. PROJECT NO. CN S100130 SHEET NO. 12–21

		1'-6"	2'-0"	2'-6"
6" CURB AND GUTTER	CROSS SECTION AREA, SQ. FT.	0.961	1.211	1.461
	CU. YD. VOLUME PER 100 LIN. FT.	3.559	4.485	5.411
8" CURB AND GUTTER	CROSS SECTION AREA, SQ. FT.	1.211	1.544	1.879
	CU. YD. VOLUME PER 100 LIN. FT.	4.485	5.719	6.955

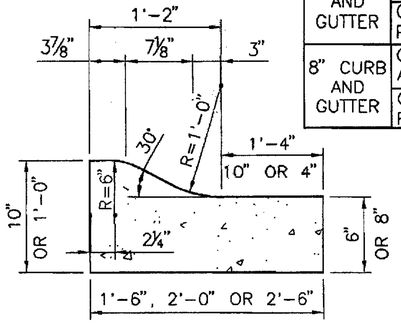

CONCRETE MOUNTABLE CURB AND GUTTER TYPE "A"

		2'-0"	2'-6"
6" CURB AND GUTTER	CROSS SECTION AREA, SQ. FT.	1.294	1.544
	CU. YD. VOLUME PER 100 LIN. FT.	4.791	5.717
8" CURB AND GUTTER	CROSS SECTION AREA, SQ. FT.	1.627	1.960
	CU. YD. VOLUME PER 100 LIN. FT.	6.026	7.261

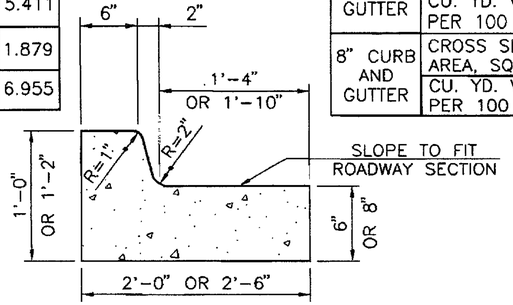

CONCRETE BARRIER CURB AND GUTTER TYPE "B"

CROSS SECTION AREA, SQ. FT.	2.113
CU. YD. VOLUME PER 100 LIN. FT.	7.824

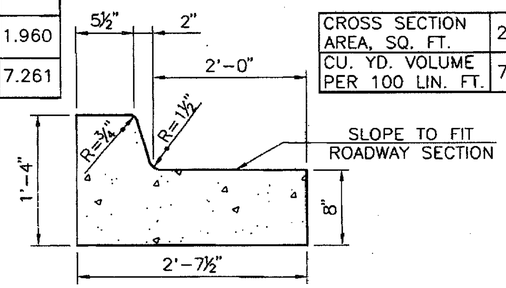

CONCRETE BARRIER CURB AND GUTTER TYPE "C"

6" CURB AND GUTTER	CROSS SECTION AREA, SQ. FT.	1.044
	CU. YD. VOLUME PER 100 LIN. FT.	3.866
8" CURB AND GUTTER	CROSS SECTION AREA, SQ. FT.	1.294
	CU. YD. VOLUME PER 100 LIN. FT.	4.791

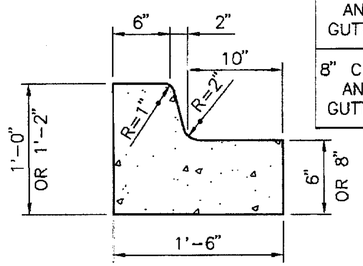

CONCRETE BARRIER CURB AND GUTTER TYPE "D"

6" CURB AND GUTTER	CROSS SECTION AREA, SQ. FT.	1.306
	CU. YD. VOLUME PER 100 LIN. FT.	4.835
8" CURB AND GUTTER	CROSS SECTION AREA, SQ. FT.	1.722
	CU. YD. VOLUME PER 100 LIN. FT.	6.379

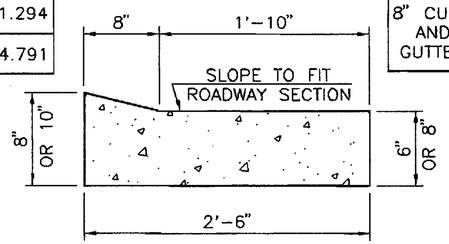

CONCRETE LAYDOWN CURB TYPE "E"

CROSS SECTION AREA, SQ. FT.	1.500
CU. YD. VOLUME PER 100 LIN. FT.	5.556

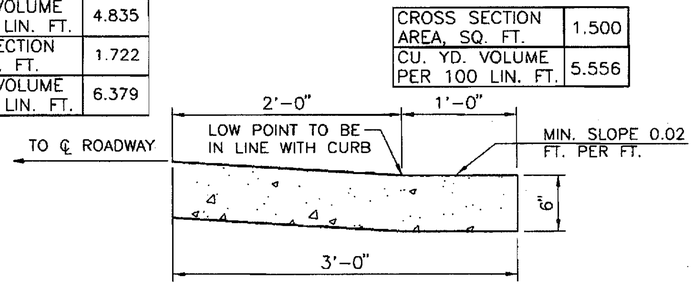

CONCRETE VALLEY GUTTER

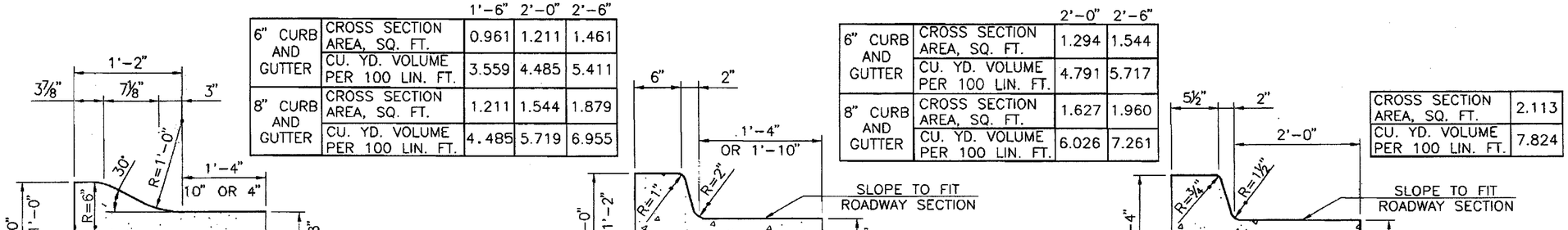

PLAN CURB AND GUTTER AND SIDEWALK

SEALED EXPANSION JOINT

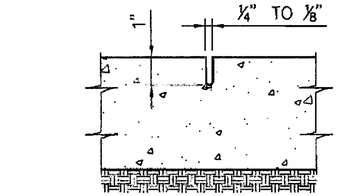

TRANSVERSE CONTRACTION JOINT

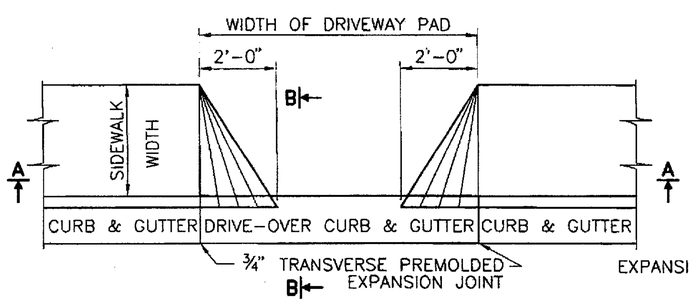

PLAN DRIVE PAD

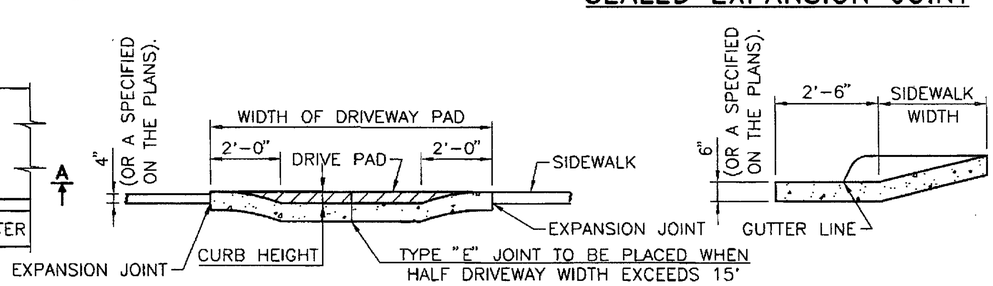

SECTION A-A

SECTION B-B

GENERAL NOTES

1. CONCRETE SHALL BE STRUCTURAL CONCRETE CLASS "A."
2. END OF DAYS POUR, 30 MINUTE INTERRUPTIONS, COLD JOINTS AND DROP INLETS SHALL DETERMINE THE LOCATION OF A CONSTRUCTION JOINT AND A 3/4" PREMOLDED BITUMINOUS JOINT IS REQUIRED.
3. PLACE TRANSVERSE CONTRACTION JOINTS AT 5'-0" INTERVALS AND AT THE END OF RADIUS POINTS OR ISLAND NOSES.
4. BED COURSE MATERIAL ON WHICH SIDEWALK IS TO BE PLACED SHALL BE COMPACTED TO 95% OF MAXIMUM DENSITY AS DETERMINED BY AASHTO T 99, METHOD C.
5. EXCAVATION AND PREMOLDED BITUMINOUS EXPANSION JOINTS TO BE INCLUDED IN THE UNIT PRICE BID FOR SIDEWALKS.
6. THE SILICONE SEALED JOINTS SHALL BE SEALED IN ACCORDANCE WITH SECTION 452 OF THE STANDARD SPECIFICATIONS.
7. FOR SLIP-FORMED CURB AND GUTTER, FURNISH 1" SEALED EXPANSION JOINTS AT 90' INTERVALS, AND TRANSVERSE CONSTRUCTION JOINTS AT 5' INTERVALS.
8. FOR SIDEWALKS AND NON-SLIP FORMED CURB AND GUTTER, FURNISH 3/4" SEALED EXPANSION JOINTS AT 30' INTERVALS, AND TRANSVERSE CONTRACTION JOINTS AT 5' INTERVALS.

NO.	DATE	REV.BY	DESCRIPTION
1	9/9/09	YML	ADDED DETAILS

REVISIONS (OR CHANGE NOTICES)

NEW MEXICO DEPARTMENT OF TRANSPORTATION STANDARD DRAWING

SIDEWALK CURB AND GUTTER

DESIGNED BY ____ DRAWN BY SKL CHECKED BY YML

609-01-1/1 1 of 1

RAY M. TRUJILLO NEW MEXICO 10218 REGISTERED PROFESSIONAL ENGINEER 11/16/09

TEMPORARY EROSION & SEDIMENT CONTROL MEASURES (T.E.S.C.M.)

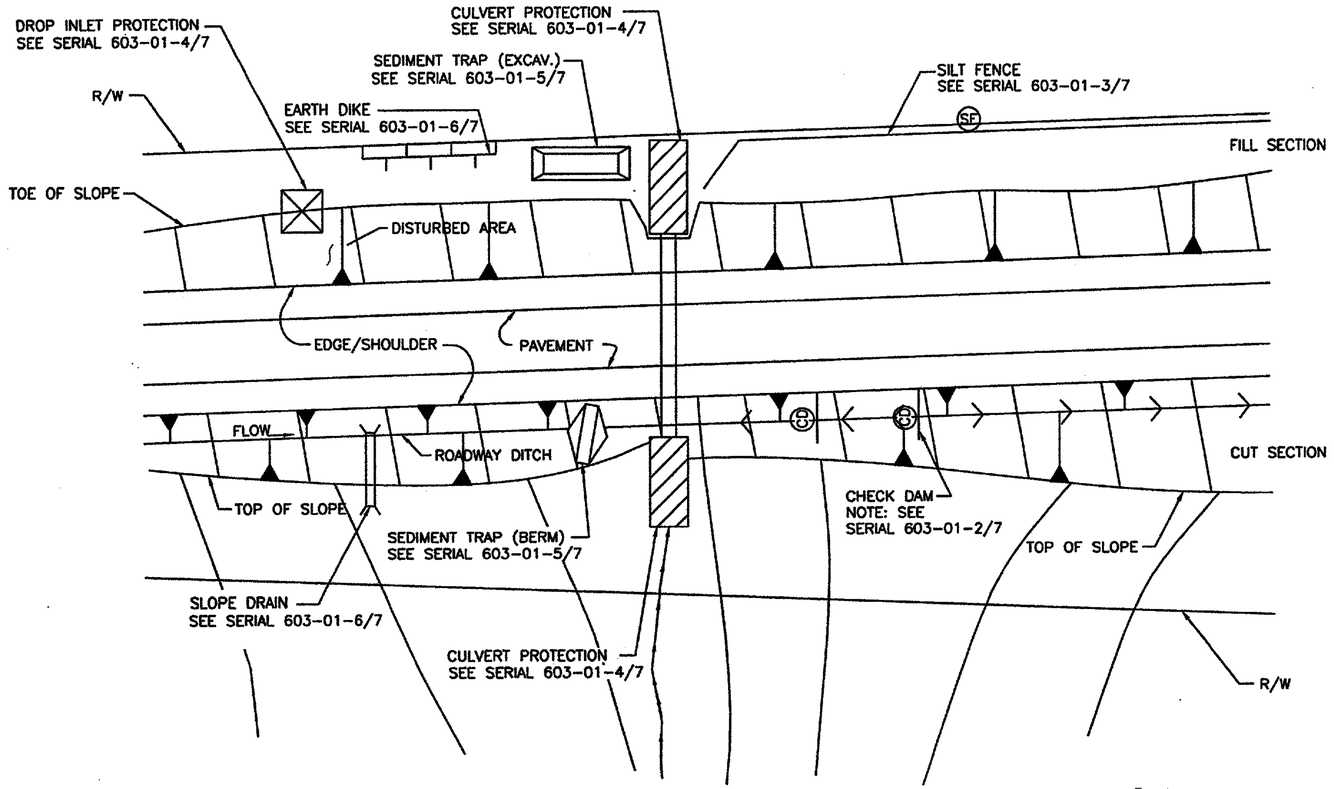

TYPICAL USAGE OF SELECTED EROSION AND SEDIMENT CONTROL MEASURES

GENERAL NOTES

1. THE SOIL RETENTION BLANKET INSTALLATION DETAILS SHOWN FOR CULVERT PROTECTION SHALL BE USED FOR ALL TEMPORARY EROSION AND SEDIMENT CONTROL MEASURES UTILIZING SOIL RETENTION BLANKETS UNLESS OTHERWISE NOTED.
2. ROCK PLATING USED IN THE TEMPORARY EROSION AND SEDIMENT CONTROL MEASURES SHOWN ON THESE SHEETS SHALL HAVE A MINIMUM THICKNESS OF 6 INCHES UNLESS OTHERWISE INDICATED.
3. ALL TEMPORARY EROSION AND SEDIMENT CONTROL MEASURES PLACED WITHIN THE CONSTRUCTION CLEAR ZONE SHALL BE INSTALLED WITH 8:1 SLOPES PARALLEL TO TRAFFIC AND 4:1 SLOPES PERPENDICULAR TO TRAFFIC.
4. SEDIMENT TRAPS SHALL BE CLEANED OF ACCUMULATED SEDIMENT WHEN APPROXIMATELY 50% FILLED.
5. CHECK DAMS SHALL BE CLEANED OF ACCUMULATED SEDIMENT WHEN THE DEPOSITS REACH APPROXIMATELY ONE-HALF THE HEIGHT OF THE CHECK DAM.
6. CULVERT PROTECTIONS SHALL BE INSTALLED UPON INITIATION OF EARTH WORK ACTIVITIES AND MAINTAINED AS MUCH AS PRACTICAL UNTIL STABILIZATION IS COMPLETED AND ACCEPTED. CULVERT PROTECTIONS MAY BE REMOVED FOR PERIODS OF TIME AS REQUIRED DURING CONSTRUCTION TO COMPLETE ADJACENT IMPROVEMENTS.
7. THE CONTRACTOR MAY CONSTRUCT AN EARTH DIKE AS SHOWN, OR RELOCATE THE CHECK DAMS AS CONSTRUCTION PROGRESSES. NO DIRECT PAYMENT SHALL BE MADE FOR RELOCATION OF THE CHECK DAMS.
8. STRAW BALES ARE NOT INTENDED FOR USE ON NEW MEXICO DEPARTMENT OF TRANSPORTATION PROJECTS.

STANDARD SYMBOLS FOR EROSION AND SEDIMENT CONTROL MEASURES

SILT FENCE	SF	PIPE SLOPE DRAIN		SEDIMENT TRAP, BERM	
STRAW BALE	SB			SEDIMENT TRAP, EXCAVATED	
EARTH DIKE	ED	DROP INLET PROTECTION		SEDIMENT BASIN	
DIVERSION CHANNEL (SWALE)	DC	CULVERT PROTECTION		TRIANGULAR SEDIMENT FILTER DIKE	TSFD
		CHECK DAM	CD		

NO.	DATE	REV. BY	DESCRIPTION
REVISIONS (OR CHANGE NOTICES)			

NEW MEXICO DEPARTMENT OF TRANSPORTATION STANDARD DRAWING

TEMPORARY EROSION & SEDIMENT CONTROL MEASURES

APPROVED Raymond A. Van Hoven 11/29/07
DESIGN ENGINEER DATE

DESIGNED BY___ DRAWN BY ___ CHECKED BY ___

603-01-1/7 SERIAL 1 OF 7

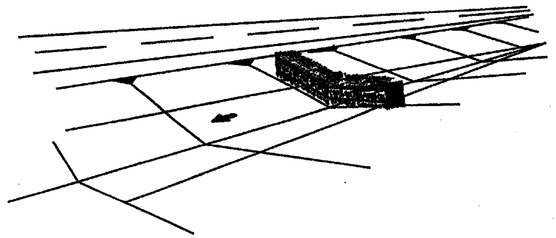

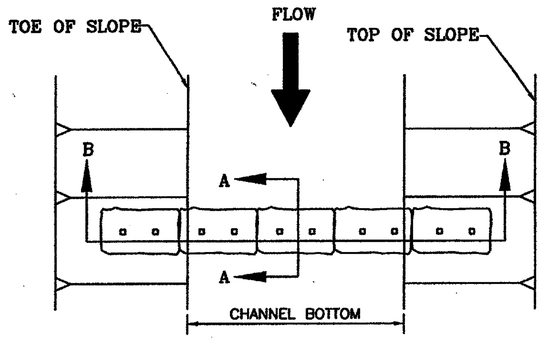

PLAN

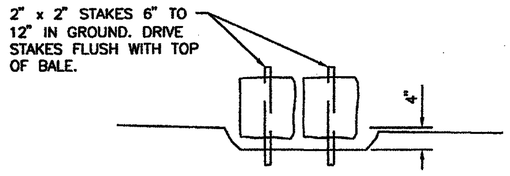

SECTION A–A

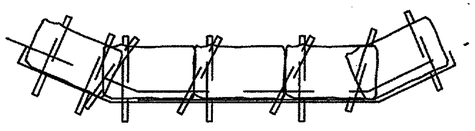

SECTION B–B

TYPE III
(STRAW BALE)

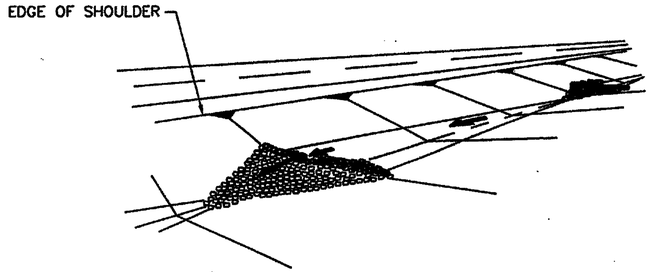

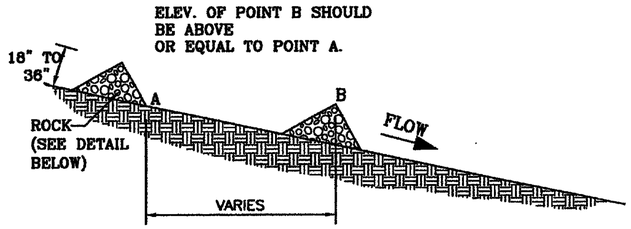

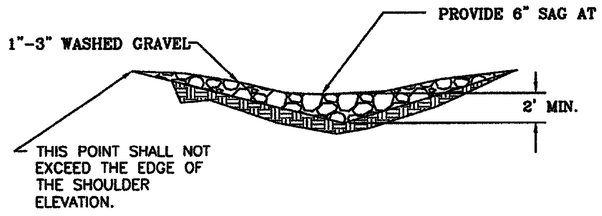

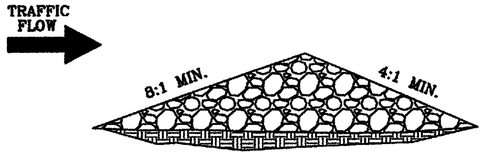

TYPE II
STONE DAM

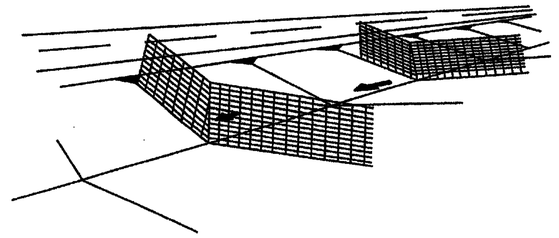

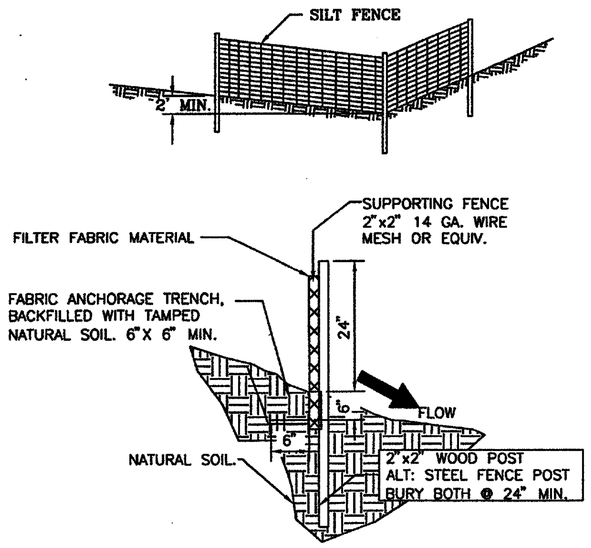

TYPE I SILT FENCE

NO.	DATE	REV. BY	DESCRIPTION

REVISIONS (OR CHANGE NOTICES)

NEW MEXICO DEPARTMENT OF TRANSPORTATION STANDARD DRAWING

TEMPORARY EROSION & SEDIMENT CONTROL MEASURES
CHECK DAMS

APPROVED Raymunda VanHoose 11/29/04
DESIGN ENGINEER DATE

DESIGNED BY___ DRAWN BY ___ CHECKED BY ___

603-01-2/7 SHEET 2 OF 7

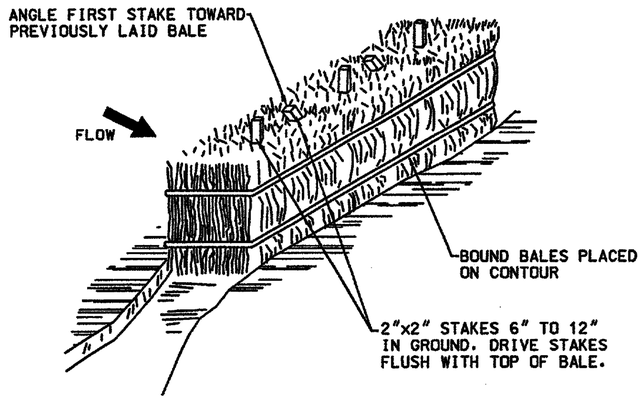

TYPE II
STRAW BALE OPTION

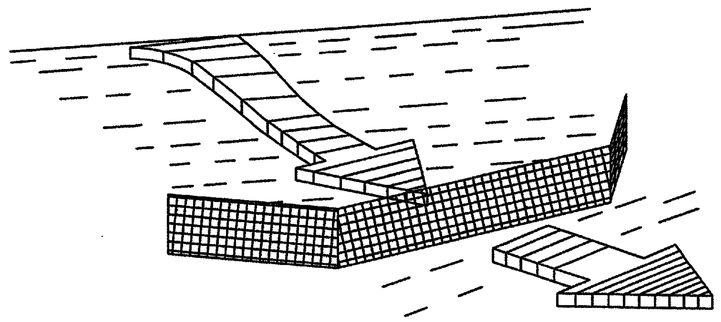

TYPE I
SILT FENCE

NOTES: SILT FENCE AND CHECK DAM

THE CONTRACTOR SHALL BE RESPONSIBLE FOR DETERMINING THE POST SPACING FOR SILT FENCES TO MINIMIZE MAINTENANCE.

1. POST SPACING SHALL BE 4 FT. MAXIMUM WITHOUT SUPPORTING FENCE. 10 FT. MAXIMUM WITH SUPPORTING FENCE.
2. POSTS FOR 4 FT. MAXIMUM POST SPACING SHALL BE 2 INCH SQUARE NOMINAL SIZE OR HEAVIER WOOD POSTS, OR STANDARD "T" OR "U" SECTION STEEL POSTS WEIGHING NOT LESS THAN 2 LBS. PER. LINEAR FOOT.

   POSTS FOR 10 FT. MAXIMUM POST SPACING SHALL BE 4 INCH SQUARE NOMINAL SIZE OR HEAVIER WOOD POSTS, OR STEEL POSTS AS SPECIFIED ABOVE.
3. SUPPORTING FENCE SHALL BE WIRE MESH (14 GA. MIN., 1 INCH MAX. MESH OPENINGS), SNOW FENCE, PLASTIC FENCE OR APPROVED.
4. SUPPORTING FENCE SHALL BE FASTENED SECURELY TO POSTS WITH STAPLES OR WIRE TIES. GEOTEXTILE FABRIC SHALL BE FASTENED SECURELY TO SUPPORTING FENCE WITH WIRE TIES SPACED AT 2 FT. CENTERS ALONG THE TOP AND MID-SECTION. WHEN A SUPPORTING FENCE IS NOT USED, GEOTEXTILE FABRIC SHALL BE SECURELY FASTENED TO POSTS WITH STAPLES OR WIRE TIES.
5. WHEN SILT FENCE IS USED FOR CHECK DAMS INSTALLED IN DITCHES, A SUPPORTING FENCE SHALL BE PROVIDED, WITH MAXIMUM POST SPACING OF 10 FT.
6. STANDARD "T" OR "U" SECTION STEEL POSTS SHALL NOT BE USED WITHIN THE CONSTRUCTION CLEAR ZONE RECOVERY AREA.
7. STRAW BALES ARE NOT INTENDED FOR USE ON NEW MEXICO DEPARTMENT OF TRANSPORTATION PROJECTS.

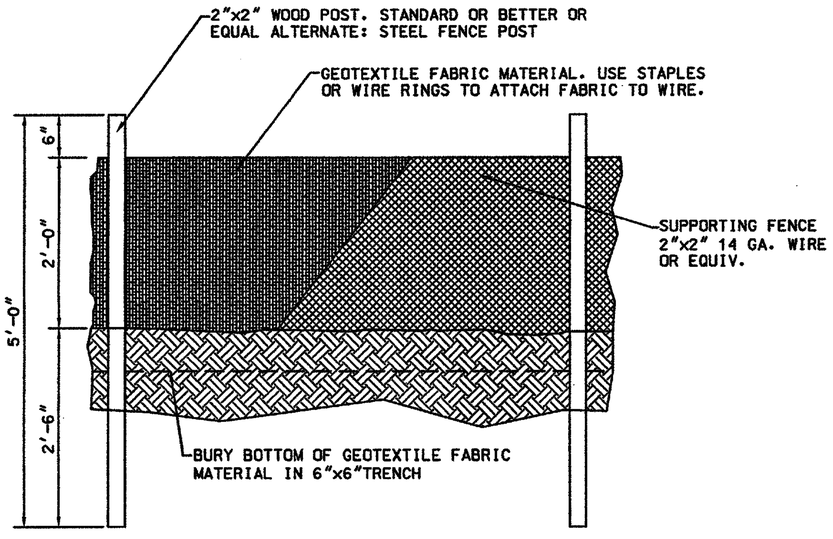

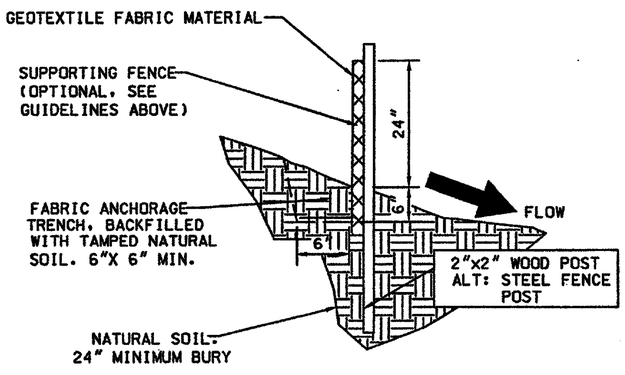

NO.	DATE	REV. BY	DESCRIPTION
			REVISIONS (OR CHANGE NOTICES)

NEW MEXICO DEPARTMENT OF TRANSPORTATION STANDARD DRAWING

TEMPORARY EROSION & SEDIMENT CONTROL MEASURES SILT FENCE

APPROVED Raymunda VanHoven 11/29/00
DESIGN ENGINEER — DATE

DESIGNED BY___ DRAWN BY___ CHECKED BY___

603-01-3/7

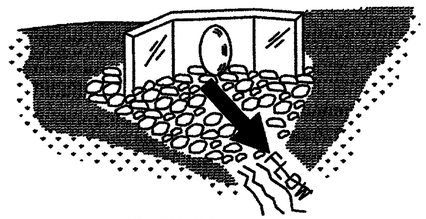

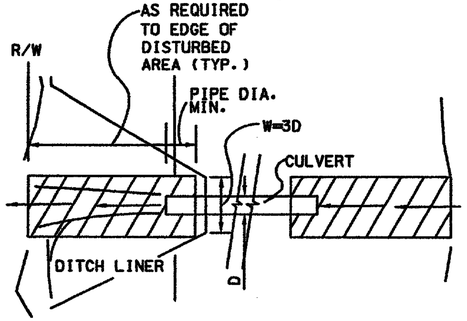

TYPICAL DITCH LINER INSTALLATIONS AT CULVERTS

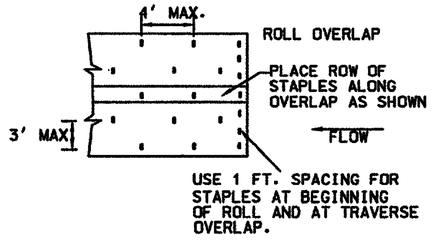

SOIL RETENTION BLANKET STAPLE PATTERN

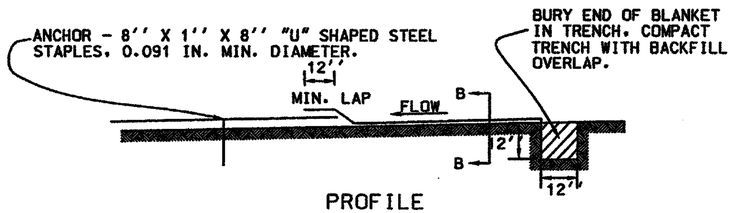

PROFILE
DITCH LINER

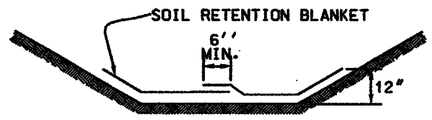

SECTION B-B

NOTES: CULVERT PROTECTION

1. WHEN CULVERT PROTECTION IS SPECIFIED, EITHER SOIL RETENTION BLANKETS OR SOIL RETENTION ROCK MAY BE PROVIDED.
2. THE CULVERT PROTECTION WIDTH REQUIRED SHALL BE IN ACCORDANCE WITH THESE DETAILS UNLESS SPECIFIED OTHERWISE.
3. THE SOIL RETENTION BLANKET INSTALLATION SHOWN OUTLINES MINIMUM REQUIREMENTS. MANUFACTURER'S RECOMMENDATIONS SHALL BE USED IF THEY ARE MORE STRINGENT.

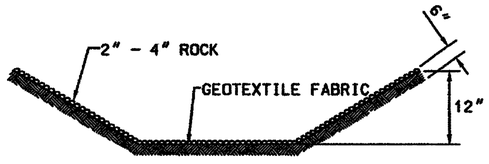

SECTION B-B

CULVERT PROTECTION

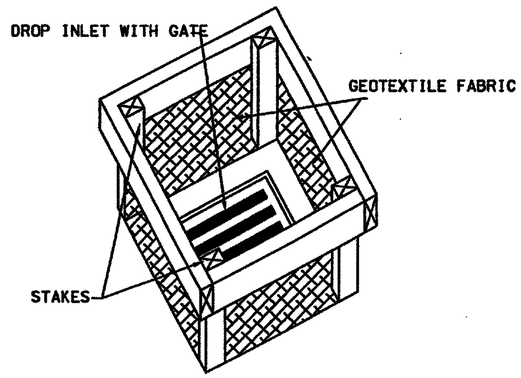

TYPE I

NOTE: WHEN SPECIFIED, ROCKS OR STRAW BALES CAN BE SUBSTITUTED FOR SILT FENCE.

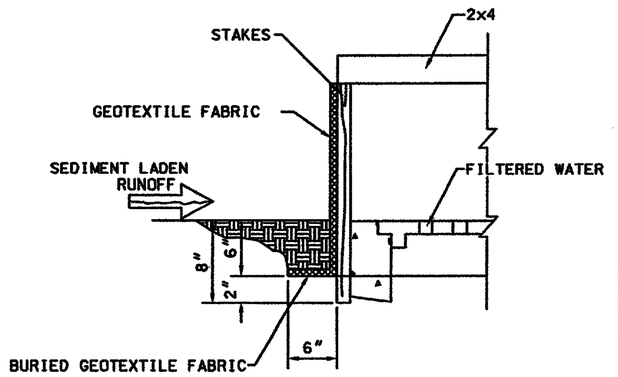

DROP INLET PROTECTION

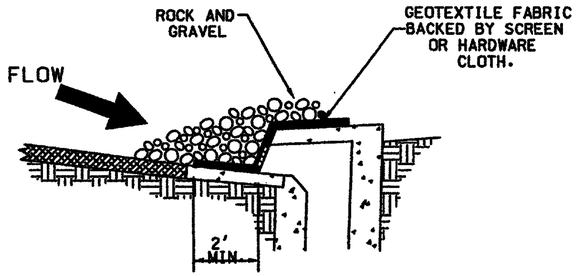

TYPE I CURB OPENING

NOTES: GRAVEL INLET PROTECTION

1. THIS INSTALLATION IS FOR A TYPE I CURB DROP INLET ONLY. THE TYPE II, III TO "N" INSTALLATION IS SIMILAR.
2. THE SPACING OF THE LONGITUDINAL BRACING SHALL NOT EXCEED 5 FT.

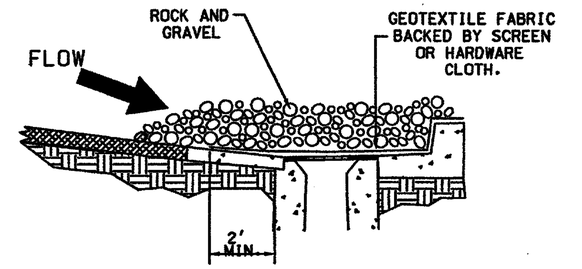

TYPE II CURB DROP INLET

NO.	DATE	REV. BY	DESCRIPTION
REVISIONS (OR CHANGE NOTICES)			

NEW MEXICO DEPARTMENT OF TRANSPORTATION STANDARD DRAWING

TEMPORARY EROSION & SEDIMENT CONTROL MEASURES
CULVERT & DROP INLET PROTECTION

APPROVED Raymunda Van Haven 11/29/09
DESIGN ENGINEER DATE

DESIGNED BY___ DRAWN BY___ CHECKED BY___

603-01-4/7

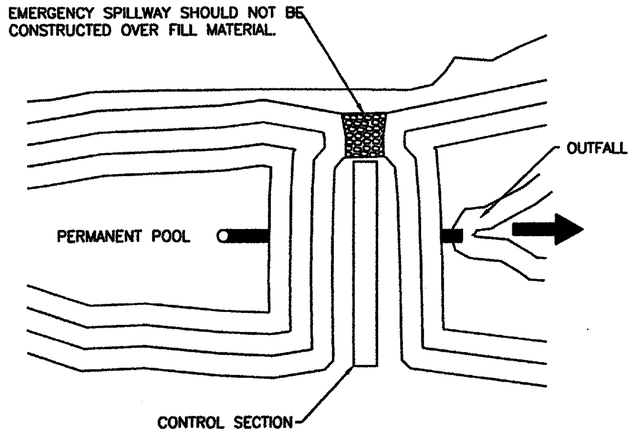

PLAN VIEW

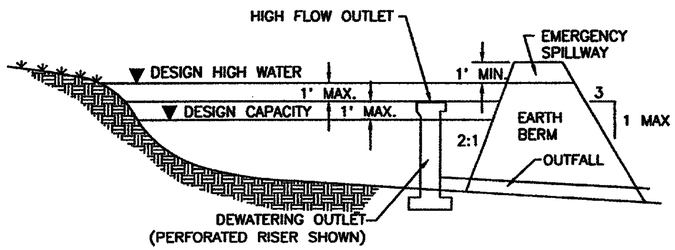

CROSS SECTION

SEDIMENT BASIN

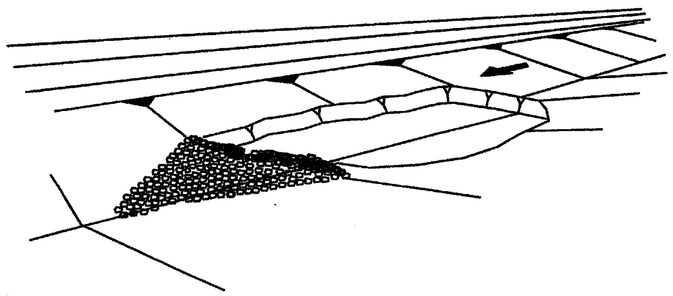

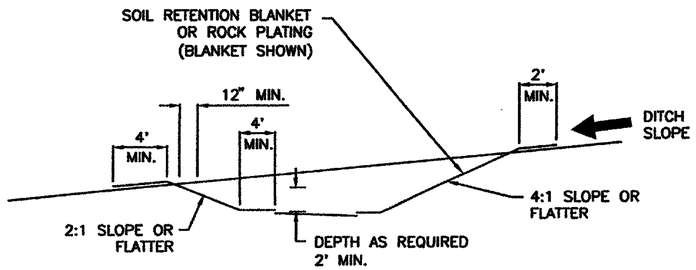

SEDIMENT BASIN, EXCAVATED

NOTES: SEDIMENT TRAP

1. TEMPORARY SEDIMENT TRAPS MAY BE CONSTRUCTED BY EXCAVATION ALONE OR BY EXCAVATION IN COMBINATION WITH AN EMBANKMENT.
2. TEMPORARY SEDIMENT TRAPS ARE OFTEN USED IN CONJUNCTION WITH A DIVERSION DIKE OR SWELL.
3. THE DRAINAGE AREA FOR THE SEDIMENT TRAP SHOULD NOT EXCEED 5 DISTURBED ACRES.
4. THE TRAP MUST BE ACCESSIBLE FOR EASE OF REGULAR MAINTENANCE, WHICH IS CRITICAL TO ITS PROPER FUNCTIONING.
5. SEDIMENT TRAPS ARE TEMPORARY MEASURES AND SHOULD NOT REMAIN IN PLACE LONGER THAN 18 TO 24 MONTHS.
6. THE EMBANKMENT MAY NOT EXCEED 5 FT. IN HEIGHT.
7. THE RECOMMENDED MINIMUM WIDTH AT THE TOP OF THE EMBANKMENT IS BETWEEN 2 FT. AND 5 FT.

SEDIMENT TRAP

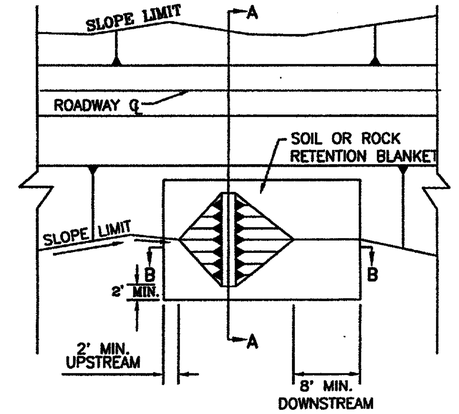

PLAN

SECTION A–A

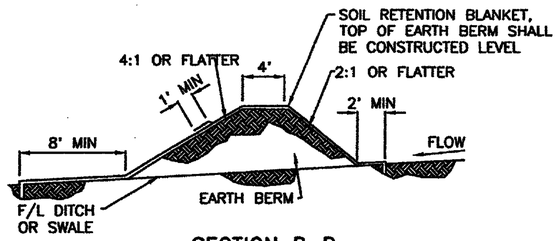

SECTION B–B

EARTH DIKE (BERM)

NO.	DATE	REV. BY	DESCRIPTION

REVISIONS (OR CHANGE NOTICES)

NEW MEXICO DEPARTMENT OF TRANSPORTATION STANDARD DRAWING

T.E.S.C.M.
SEDIMENT BASIN, SEDIMENT TRAP & EARTH DIKE

APPROVED Raymunda Von Hoven 11/19/97
DESIGN ENGINEER DATE

DESIGNED BY___ DRAWN BY ___ CHECKED BY ___

603-01-5/7 SHEET 5 OF 7

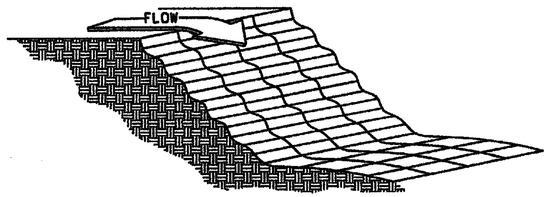

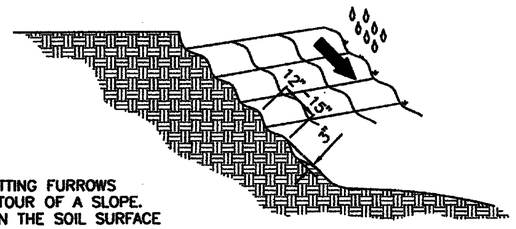

GROOVING IS CUTTING FURROWS ALONG THE CONTOUR OF A SLOPE. IRREGULARITIES IN THE SOIL SURFACE CATCH RAINWATER AND PROVIDE SOME RETENTION OF LIME, FERTILIZER AND SEED.

GROOVING SLOPES

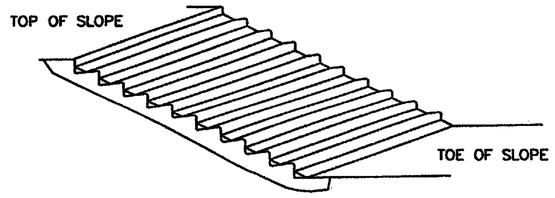

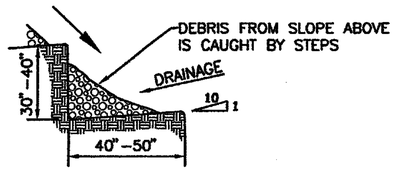

STAIR STEPPING CUT SLOPE

SURFACE ROUGHENING

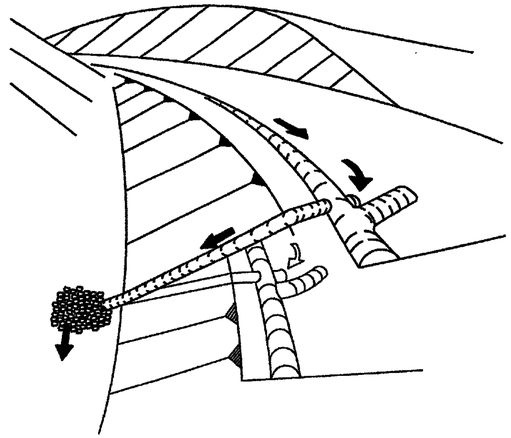

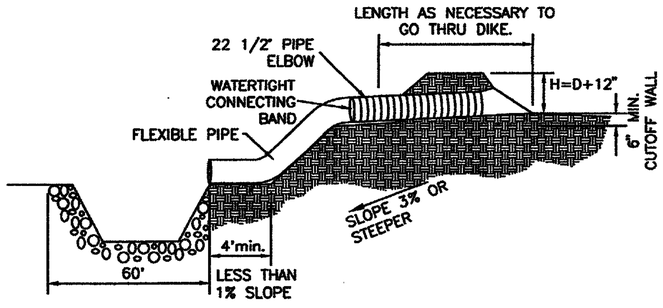

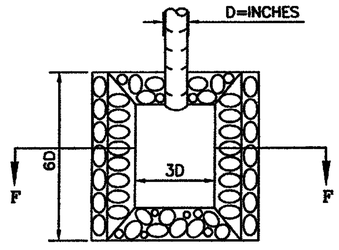

RIPRAP APRON PLAN

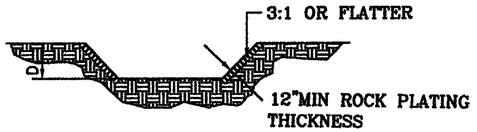

SECTION F–F

SLOPE DRAIN

NOTES: PIPE SLOPE DRAIN

1. THE FLEXIBLE PIPE SHALL BE THE SAME DIAMETER AS THE INLET PIPE AND SHALL BE CONSTRUCTED OF A DURABLE MATERIAL WITH HOLD-DOWN GROMMETS SPACED AT 10 FT. ON CENTER.
2. THE FLEXIBLE PIPE SHALL BE SECURELY FASTENED TO THE CORRUGATED METAL OR HIGH DENSITY POLYETHYLENE PIPE WITH METAL STRAPPING OR WATERTIGHT CONNECTING COLLARS.
3. THE FLEXIBLE PIPE SHALL BE STAKED AT 10 FT. CENTERS ALONG THE SLOPE USING MINIMUM 4 INCH SQUARE WOOD POSTS OR STANDARD STEEL POSTS DRIVEN 2 FT. MINIMUM INTO THE GROUND.
4. RIGID PIPE SHALL BE ANCHORED AT BENDS. ANCHORAGE SHALL CONSIST OF A MINIMUM 4 INCH SQUARE WOOD POSTS OR STANDARD STEEL POSTS DRIVEN 2 FT. MINIMUM INTO GROUND, OR EARTHEN THRUST BLOCK.
5. PAYMENT OF BASIN ITEMS ARE INCIDENTAL TO THE COST OF FLEXIBLE STORM DRAIN PIPE.
6. FOR PIPE DIAMETER ON TEMPORARY SLOPE DRAIN SEE TABLE BELOW

TEMPORARY SLOPE DRAIN PIPES

Runoff Flow Rate (cfs)	Pipe Diameter Required (inches)
0 – 6.0	18
6.0 – 9.0	21
9.0 – 12.0	24
12.0 – 20.0	30

NO.	DATE	REV. BY	DESCRIPTION

REVISIONS (OR CHANGE NOTICES)

NEW MEXICO DEPARTMENT OF TRANSPORTATION STANDARD DRAWING

TEMPORARY EROSION & SEDIMENT CONTROL MEASURES PIPE SLOPE DRAIN & SURFACE ROUGHENING

APPROVED Raymond Van Haren 11/29/04
DESIGN ENGINEER DATE

DESIGNED BY___ DRAWN BY ___ CHECKED BY ___

603-01-6/7 SHEET 6 OF 7

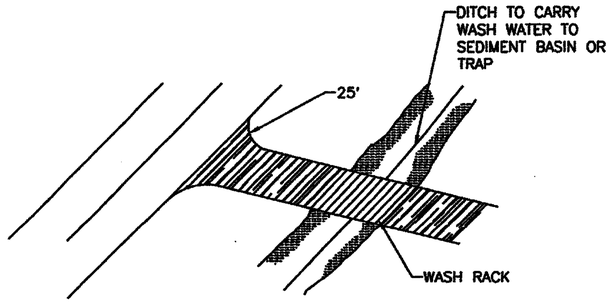

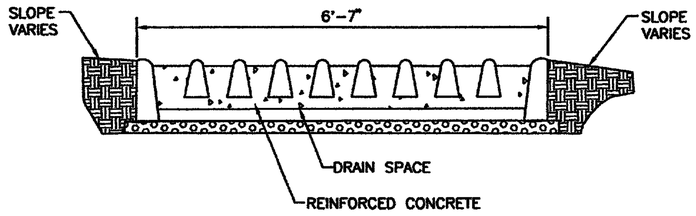

WASH RACK

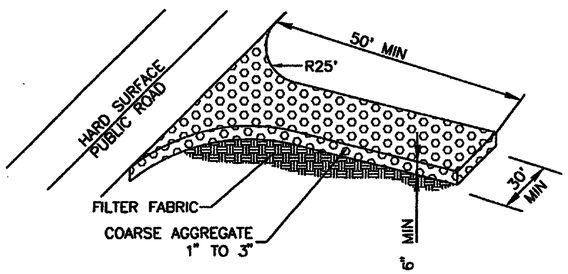

OFFSITE TRACKING PREVENTION

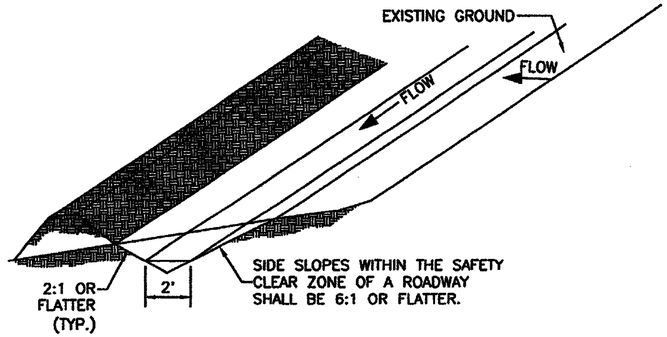

TYPICAL SWALE CONFIGURATION

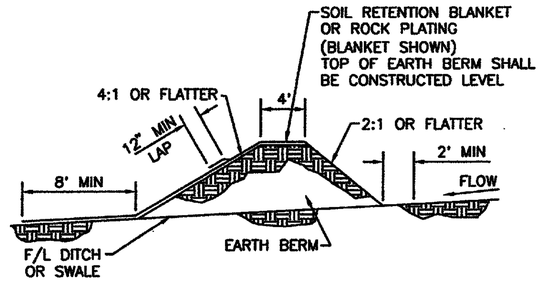

FILTER FABRIC DIVERSION DIKE

DIVERSION DIKE

NO.	DATE	REV. BY	DESCRIPTION

REVISIONS (OR CHANGE NOTICES)

NEW MEXICO DEPARTMENT OF TRANSPORTATION STANDARD DRAWING

T.E.S.C.M.
OFFSITE TRACKING PREVENTION & DIVERSION DIKE

APPROVED Raymunda Van Hoven 11/19/04
DESIGN ENGINEER DATE

DESIGNED BY___ DRAWN BY ___ CHECKED BY ___

603-01-7/7 SHEET 7 OF 7

SUMMARY
FILENAME

GENERAL NOTES;

1. NMDOT IS RECOGNIZED AS A TITLE II PUBLIC ENTITY UNDER THE AMERICANS WITH DISABILITIES ACT (ADA), OF 1990 (PUBLIC LAW 101-336). A TITLE II ENTITY IS DEFINED AS ANY STATE OR LOCAL GOVERNMENT ENTITY AND PROHIBITS DISCRIMINATION ON THE BASIS OF DISABILITY. THE ADA EXTENDS THE PRINCIPLES OF SECTION 504 OF THE REHABILITATION ACT, OF 1973, AS AMENDED, TO PROTECT PERSONS WITH DISABILITIES IN ALL PUBLIC FACILITIES AND PROGRAMS IRRESPECTIVE OF THE FUNDING SOURCE.
2. THESE DRAWINGS PROVIDE GUIDANCE FOR COMPLIANCE WITH THE **PROPOSED ACCESSIBILITY GUIDELINES FOR PEDESTRIAN FACILITIES IN THE PUBLIC RIGHT-OF-WAY (PROWAG), JULY 26, 2011, OR LATEST EDITION** . THESE GUIDELINES SHALL APPLY TO ALL NEW AND ALTERED PEDESTRIAN ACCESS ROUTES (PAR).
3. REFER TO CONSTRUCTION PLANS FOR THE DETAILED LAYOUTS AND DETAILS.
4. PEDESTRIAN ACCESS ROUTES (PAR) SHALL BE FIRM, STABLE, AND SLIP RESISTANT. PROVIDE SLIP RESISTANT TEXTURE ON SIDEWALKS AND CURB RAMPS BY BROOMING TRANSVERSE TO THE SLOPE OF THE RAMP AND /OR PERPENDICULAR TO PEDESTRIAN TRAVEL. EXTEND TEXTURE THE FULL WIDTH AND LENGTH OF THE CURB RAMP INCLUDING SIDE FLARES. DO NOT SCORE OR MAKE GROOVES IN SLOPED SURFACE. LINES SHOWN ON STANDARD DETAILS ARE FOR ILLUSTRATIONS ONLY.
5. VERTICAL SURFACE DISCONTINUITIES SHALL BE 0.5 INCHES MAXIMUM. VERTICAL DISCONTINUITIES BETWEEN 0.25 INCHES AND 0.5 INCHES SHALL BE BEVELED WITH A SLOPE NOT STEEPER THAN 50 PERCENT. THE BEVEL SHALL BE APPLIED ACROSS THE ENTIRE VERTICAL SURFACE DISCONTINUITY.
6. HORIZONTAL OPENINGS IN GRATINGS AND JOINTS SHALL NOT PERMIT PASSAGE OF A SPHERE MORE THAN 0.5 INCHES IN DIAMETER. ELONGATED OPENINGS IN GRATES SHALL BE PLACED SO THAT THE LONG DIMENSION IS PERPENDICULAR TO THE DOMINANT DIRECTION OF TRAVEL.
7. PROVIDE EXPANSION JOINT MATERIAL 0.5 INCHES THICK WHERE CURB RAMP ADJOINS ANY RIGID PAVEMENT, SIDEWALK OR STRUCTURE WITH THE TOP OF JOINT FILLER FLUSH WITH ADJACENT CONCRETE SURFACE.
8. SEAL ALL JOINTS WITH AN APPROVED SEALING MATERIAL.
9. INSTALL JOINTS WHERE CURB RAMPS, TURNING SPACES, FLARES, AND SIDEWALKS ABUT. ALL JOINTS AND TRANSITIONS SHALL BE FLUSH.
10. VERTICAL WALLS OR HEADER CURBS ARE PERMITTED WHEN ADJACENT TO NON-WALK AREAS OR ELEVATION DIFFERENCES CANNOT BE ACCOMMODATED BY CURB RAMP FLARES OR GRADING. GRADE NON-WALK AREAS AT 3:1 OR FLATTER.
11. CONSTRUCTION TOP / BOTTOM OF CURB TO BE FLUSH WITH ADJACENT SURFACES (CURB RAMPS, SIDEWALKS, AND FLARES). VERTICAL LIPS NOT PERMITTED AT THE BOTTOM OF CURB RAMP WHERE THE RAMP MEETS STREET LEVEL.

SIDEWALKS

12. SIDEWALK, AND CURB AND GUTTER CONSTRUCTION SHALL BE IN ACCORDANCE WITH SERIAL 609-01-1/1.
13. SIDEWALK CROSS SLOPE IS RECOMMENDED TO BE CONSTRUCTED FOR CROSS SLOPE OF 1.6% TYPICAL, BUT SHALL NOT EXCEED 2.0% CROSS SLOPE ON THE PEDESTRIAN ACCESS ROUTE (PAR).
14. SIDEWALK SHALL HAVE A MINIMUM WIDTH OF 5.0 FT, EXCLUSIVE OF THE WIDTH OF THE CURB RETURN.
    EXCEPTION: WHERE SIDEWALK WIDTH NEEDS TO BE REDUCED TO NO LESS 4.0 FT, PASSING SPACES SHALL BE PROVIDED AT INTERVALS OF 200 FT MAXIMUM. PASSING SPACES SHALL BE 5.0 FT MINIMUM BY 5.0 FT MINIMUM.
15. ANY SIGNS POSTS, UTILITY POLES, FIRE HYDRANTS, TRAFFIC SIGNALS, STREET FURNITURE, AND OTHER OBJECTS SHALL NOT REDUCE THE CLEAR WIDTH TO LESS THAN 4.0 FT.
16. THE CLEAR WIDTH OF PEDESTRIAN ACCESS ROUTES (PAR) WITHIN MEDIANS AND PEDESTRIAN REFUGE ISLANDS SHALL BE 5.0 FT MINIMUM.

CURB RAMPS

17. FOR NEW CONSTRUCTION AND ALTERATIONS, CONSTRUCT CURB RAMP AND FLARE SLOPES WITH THE FLATTEST SLOPE FEASIBLE. THE MAXIMUM SLOPE ALLOWABLE IS INDICATED IN NOTE 18 OF THE CURB RAMP STANDARD DETAILS. SLOPES THAT EXCEED THOSE INDICATED IN THE CURB RAMP STANDARD DETAILS, OR CONSTRUCTION PLANS, WILL NOT BE ACCEPTED AND WILL BE REMOVED AND RECONSTRUCTED.
18. RUNNING SLOPE OF THE CURB RAMP SHALL BE 8.3 % MAX (RECOMMENDED 7.0%) BUT SHALL NOT REQUIRE THE RAMP LENGTH TO EXCEED 15.0 FT TO AVOID CHASING THE SLOPE INDEFINITELY WHEN CONNECTING TO STEEP GRADES. WHEN APPLYING THE 15 FOOT MAX LENGTH, THE RUNNING SLOPE OF THE CURB RAMP SHALL BE EXTENDED AS FLAT AS MAXIMUM EXTENT PRACTICABLE.
19. CONSTRUCT THE CLEAR WIDTH OF CURB RAMP RUNS (EXCLUDING ANY FLARED SIDES), BLENDED TRANSITIONS, AND TURNING SPACES AS TYPICAL 5.0 FT X 5.0 FT AND MINIMUM 4.0 FT X 4.0 FT CLEAR SPACE BEYOND THE CURB FACE, WITHIN THE WIDTH OF THE CROSSWALK AND WHOLLY OUTSIDE THE PARALLEL VEHICLE TRAVEL LANE.
20. CURB RAMP AND SIDE FLARE LENGTHS ARE VARIABLE AND BASED ON CURB HEIGHT AND THE SIDEWALK SLOPE.
21. THE CHANGE IN GRADE AT THE BOTTOM OF THE CURB RAMP AND ADJOINING ROAD SURFACE SHALL NOT EXCEED AN ALGEBRAIC DIFFERENCE OF 13.3%. THE COUNTER SLOPE OF THE GUTTER OR ROAD AT THE FOOT OF A CURB RAMP RUNS, TURNING SPACE OR BLENDED TRANSITION IS NOT TO EXCEED 5.0%.
22. CONSTRUCT CURB RAMPS FLUSH TO ADJACENT ROADWAY. GRADE EDGE OF ROAD ELEVATIONS AT THE FLOW LINE TO ENSURE POSITIVE DRAINAGE AND PREVENT PONDING. FOR LEVEL TURNING SPACES BEHIND CURB, ADJUST SLOPES TO PROVIDE POSITIVE DRAINAGE.
23. GRADE BREAKS AT THE TOP AND BOTTOM OF CURB RAMPS SHALL BE PERPENDICULAR TO THE DIRECTION OF THE CURB RAMP RUN. GRADE BREAKS SHALL NOT BE PERMITTED ON THE SURFACE OF CURB RAMP RUNS AND TURNING SPACES. SURFACE SLOPES THAT MEET AT GRADE BREAKS SHALL BE FLUSH.
24. ALL SLOPES ARE MEASURED WITH RESPECT TO A LEVEL PLANE. THEREFORE, THE LENGTH OF CURB RAMP IS NOT SOLELY DEPENDENT ON THE HEIGHT OF CURB. (FOR EXAMPLE, A 6" CURB DOES NOT NECESSARILY MEAN A RAMP LENGTH OF 6.0 FT FOR AN 8.3% SLOPE).

CROSSWALKS

25. PROVIDE A SEPARATE CURB RAMP FOR EACH MARKED OR UNMARKED CROSSWALK. CURB RAMP LOCATIONS SHALL BE PLACED WITHIN THE WIDTH OF THE MARKED OR UNMARKED CROSSWALK AS SHOWN IN THE CONSTRUCTION PLANS.

DETECTABLE WARNING

26. DETECTABLE WARNING SURFACES (DWS) CONSISTING OF TRUNCATED DOMES SHALL BE UTILIZED WHERE CURB RAMPS, BLENDED TRANSITIONS, OR TURNING SPACE PROVIDE A FLUSH PEDESTRIAN CONNECTION TO THE STREET OR WHERE THE PEDESTRIAN ACCESS ROUTE (PAR) CROSSES A STREET, ALLEY, TRAFFIC ISLAND, MEDIAN, OR RAILROAD. DETECTABLE WARNING SURFACES (DWS) WILL NOT BE INSTALLED AT RESIDENTIAL DRIVEWAYS. DETECTABLE WARNING SURFACE MUST BE PROVIDED AT THE JUNCTION BETWEEN THE PAR AND COMMERCIAL DRIVEWAYS THAT ARE STOP OR YIELD CONTROLLED OR ARE CONTROLLED BY A SIGNAL.
27. DETAILS OF DETECTABLE WARNING SURFACE ARE SHOWN IN CONTRACT PLANS AND SHEET 608-001-8/12 OF THE STANDARD DRAWINGS.

ACCESSIBLE PEDESTRIAN SIGNALS (APS) AND PEDESTRIAN PUSHBUTTONS

28. FOR ALTERATION PROJECTS, PROVIDE ACCESS TO EXISTING PEDESTRIAN PUSHBUTTONS TO THE MAXIMUM EXTENT PRACTICABLE. INSTALL PEDESTRIAN STUB POLES, WHERE APPLICABLE, SO AS NOT TO CREATE PEDESTRIAN OBSTRUCTIONS. REFER TO THE MUTCD FOR FURTHER GUIDANCE.
29. PEDESTRIAN SIGNAL PUSH BUTTONS SHALL COMPLY WITH THE CURRENT EDITION OF THE MANUAL ON UNIFORM TRAFFIC CONTROL DEVICES (MUTCD) AND LOCATED WITHIN A HORIZONTAL REACH OF 0" TO 10" AND SHALL BE WITHIN 36" TO 46" ABOVE THE SIDEWALK SURFACE.
30. PEDESTRIAN SIGNAL SHALL HAVE 4FTx4FT MIN TURNING SPACE TO PROVIDE ACCESS TO PUSH BUTTONS.

ALTERATIONS TO EXISTING FACILITIES - GENERAL NOTES:

ADDITIONS OR ALTERATIONS TO ANY FACILITY SHALL CONFORM TO THE REQUIREMENTS OF THE NEW CONSTRUCTION STANDARDS WITHIN THE NMDOT PEDESTRIAN ACCESS STANDARDS AND PROWAG 2011 OR LATEST EDITION. ANY DESIGN / CONSTRUCTION DEVIATION THAT IS DEEMED AN VARIANCE OR TECHNICALLY INFEASIBLE BY THE DEFINITION BELOW SHALL REQUIRE SUBMITTAL AND APPROVAL OF ADA DESIGN VARIANCE PROCEDURES.

31. EXCEPTION: IN ALTERATION WORK, IF COMPLIANCE IS TECHNICALLY INFEASIBLE, THE ALTERATION SHALL PROVIDE ACCESSIBILITY TO THE MAXIMUM EXTENT PRACTICABLE. ANY ELEMENTS OR FEATURES OF THE BUILDING OR FACILITY THAT IS BEING ALTERED AND CAN BE MADE ACCESSIBLE SHALL BE MADE ACCESSIBLE WITHIN THE SCOPE OF THE ALTERATION.

32. TECHNICAL INFEASIBILITY: MEANS, WITH RESPECT TO AN ALTERATION OF A BUILDING OR A FACILITY, THAT IT HAS LITTLE LIKELIHOOD OF BEING ACCOMPLISHED BECAUSE EXISTING STRUCTURAL CONDITIONS WOULD REQUIRE REMOVING OR ALTERING A LOAD-BEARING MEMBER WHICH IS AN ESSENTIAL PART OF THE STRUCTURAL FRAME; OR BECAUSE OTHER EXISTING PHYSICAL OR SITE CONSTRAINTS PROHIBIT.

33. IN ALTERATIONS WHERE EXISTING PHYSICAL CONSTRAINTS PREVENT COMPLIANCE TO PROVDE A CURB RAMP FOR EACH PEDESTRIAN CROSSING A SINGLE DIAGONAL CURB RAMP SHALL BE PERMITTED TO SERVE BOTH PEDESTRIAN STREET CROSSINGS.

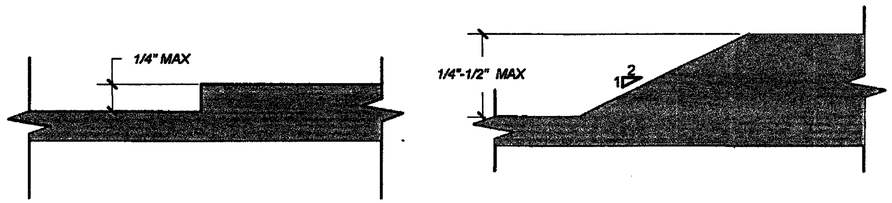

VERTICAL SURFACE DISCONTINUITIES
SCALE: NONE REFER TO NOTE 5

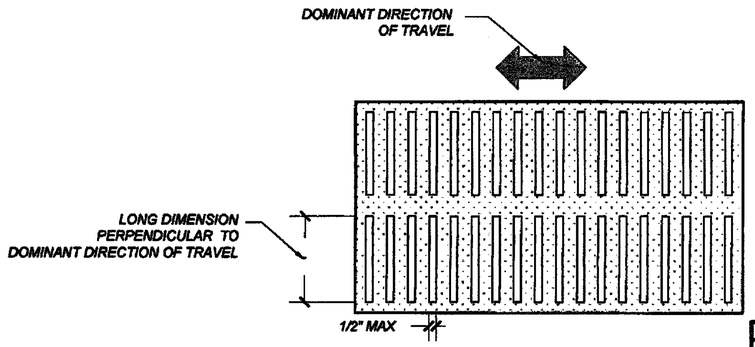

HORIZONTAL OPENINGS
SCALE: NONE REFER TO NOTE 6

NO.	DATE	REV. BY	DESCRIPTION

REVISIONS (OR CHANGE NOTICES)

NEW MEXICO
DEPARTMENT OF TRANSPORTATION
STANDARD DRAWING

PEDESTRIAN ACCESS ROUTE
GENERAL NOTES

APPROVED _____ 1-15-15
DESIGN ENGINEER DATE

608-001-1 608-1 of 12

file path

DRAWING SCALE = NOT TO SCALE

13-8A

SUMMARY
FILENAME

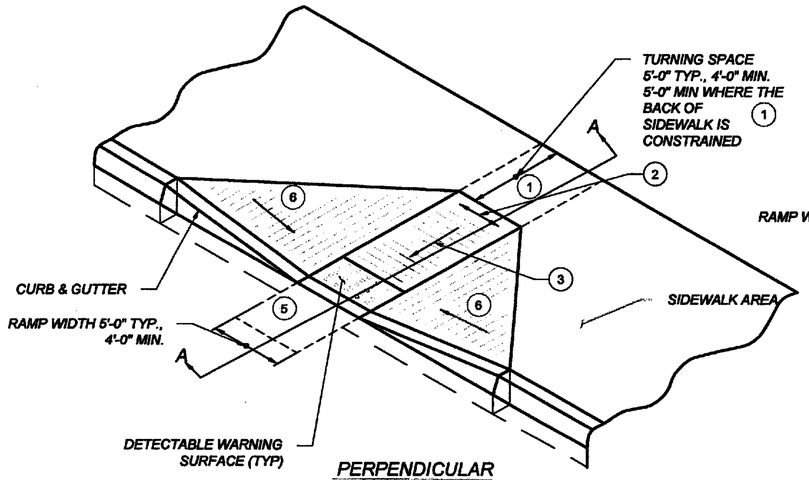

PERPENDICULAR CURB RAMP
SCALE: NONE

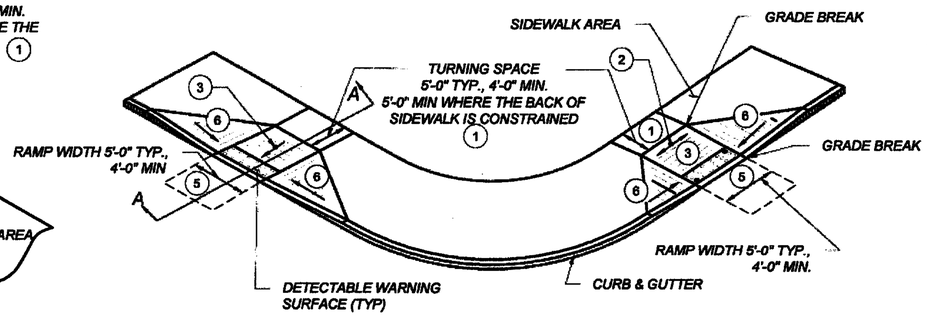

DUAL PERPENDICULAR CURB RAMP
(PREFERRED INSTALLATION)
SCALE: NONE

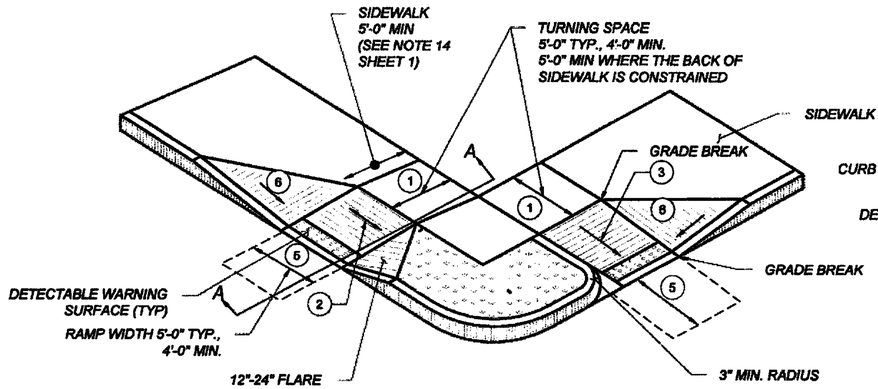

DUAL PERPENDICULAR CURB RAMP
(ALTERNATE INSTALLATION)
SCALE: NONE

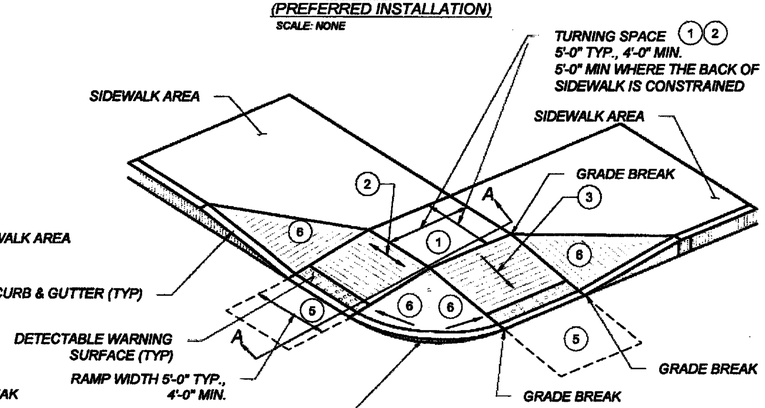

PERPENDICULAR CURB RAMPS
WITH SHARED TURNING SPACE
SCALE: NONE

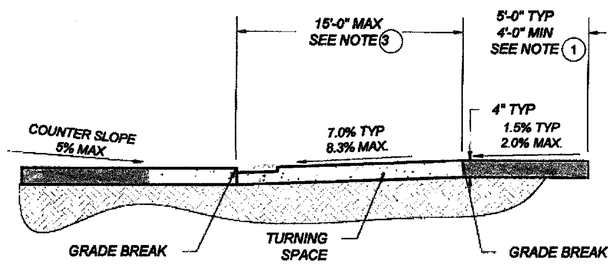

SECTION A-A
SCALE: NONE

KEYED NOTES

1. TURNING SPACE SHALL HAVE MAXIMUM CROSS SLOPE AND LONGITUDINAL SLOPE OF 2.0% (RECOMMEND 1 5%). TURNING SPACE SHALL BE 4.0 FT BY 4.0 FT MIN (RECOMMEND 5.0 FT BY 5.0 FT) AT THE TOP OF THE CURB RAMP AND SHALL BE PERMITTED TO OVERLAP OTHER TURNING SPACES AND CLEAR SPACES. WHERE THE TURNING SPACE IS CONSTRAINED AT THE BACK OF SIDEWALK, THE TURNING SPACE SHALL BE 4.0 FT MIN BY 5.0 FT MIN. THE 5.0 FT SHALL BE PROVIDED IN THE DIRECTION OF THE RAMP RUN.
2. CROSS SLOPE SHALL BE 2.0% MAX (RECOMMENDED 1.5%). EXCEPTION. THE CROSS SLOPE OF CURB RAMPS AT PEDESTRIAN STREET CROSSING WITHOUT YIELD OR STOP CONTROL, TRAFFIC SIGNALS DESIGNED FOR THE GREEN PHASE, AND AT MIDBLOCK PEDESTRIAN STREET CROSSING, THE CROSS SLOPE IS PERMITTED TO MATCH STREET OR HIGHWAY GRADE.
3. RUNNING SLOPE OF THE CURB RAMP SHALL BE 8 3 % MAX (RECOMMENDED 7.0%) BUT SHALL NOT REQUIRE THE RAMP LENGTH TO EXCEED 15.0 FT TO AVOID CHASING THE SLOPE INDEFINITELY WHEN CONNECTING TO STEEP GRADES. WHEN APPLYING THE 15 FOOT MAX LENGTH, THE RUNNING SLOPE OF THE CURB RAMP SHALL BE EXTENDED AS FLAT AS MAXIMUM EXTENT PRACTICABLE.
4. GRADE BREAKS AT THE TOP AND BOTTOM OF CURB RAMPS RUNS SHALL BE PERPENDICULAR TO THE DIRECTION OF THE RAMP RUN GRADE BREAKS SHALL NOT BE PERMITTED ON THE SURFACE OF RAMP RUNS AND TURNING SPACE. SURFACE SLOPES THAT MEET AT GRADE BREAKS SHALL BE FLUSH.
5. COUNTER SLOPE OF THE GUTTER OR STREET AT THE FOOT OF A CURB RAMP, RUN OR TURNING SPACE SHALL BE 5% MAX.
6. FLARED SIDES ARE TO HAVE A SLOPE OF 10% MAX (RECOMMEND 9%), MEASURED PARALLEL TO THE BACK OF THE CURB, UNLESS THE FLARED SIDES ARE PROTECTED FROM CROSS TRAVEL BY LANDSCAPING, STREET FURNITURE, CHAINS, FENCING, OR RAILINGS.

NOTES:

- A. DO NOT SCORE OR MAKE GROOVES IN SLOPED SURFACE. LINES SHOWN ON STANDARD DETAILS ARE FOR ILLUSTRATION ONLY.
- B. DETAILS OF THE DETECTABLE WARNING SURFACE ARE SHOWN IN THE CONSTRUCTION PLANS AND SHEET 608-001-8/12 OF THE STANDARD DRAWINGS.
- C. IN ALTERATIONS WHERE EXISTING PHYSICAL CONSTRAINTS PREVENT COMPLIANCE TO PROVIDE A CURB RAMP FOR EACH PEDESTRIAN CROSSING A SINGLE DIAGONAL CURB RAMP SHALL BE PERMITTED TO SERVE BOTH PEDESTRIAN STREET CROSSINGS.
- D. CONCRETE HEADER CURBS CONSTRUCTED AS PART OF THE CURB RAMP WILL BE CONSIDERED INCIDENTAL TO ITEM NUMBER 608004 AND NO SEPARATE PAYMENT WILL BE MADE.

NO.	DATE	REV. BY	DESCRIPTION

REVISIONS (OR CHANGE NOTICES)

NEW MEXICO
DEPARTMENT OF TRANSPORTATION
STANDARD DRAWING

PERPENDICULAR
CURB RAMPS

APPROVED _____ DESIGN ENGINEER _____ 1-13-15 DATE

608-001-2

608- 2 of 12

file path

DRAWING SCALE = NOT TO SCALE

13-8B

SUMMARY
FILENAME

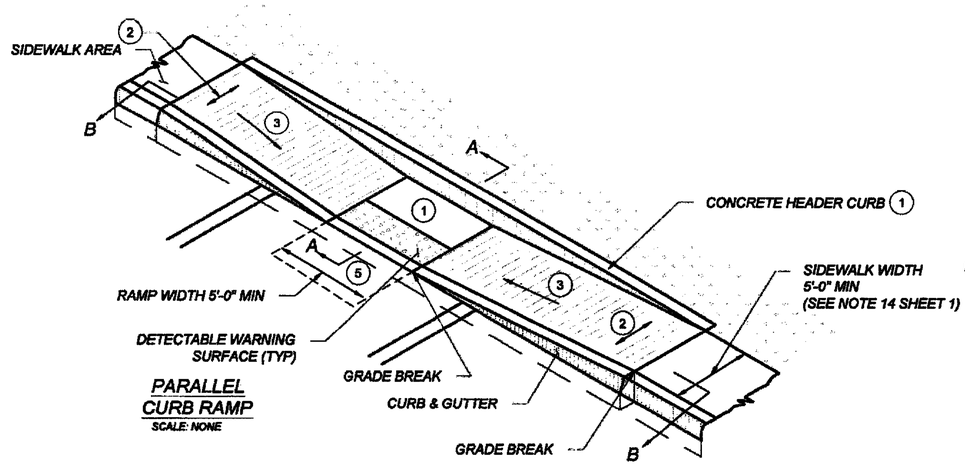

PARALLEL CURB RAMP
SCALE: NONE

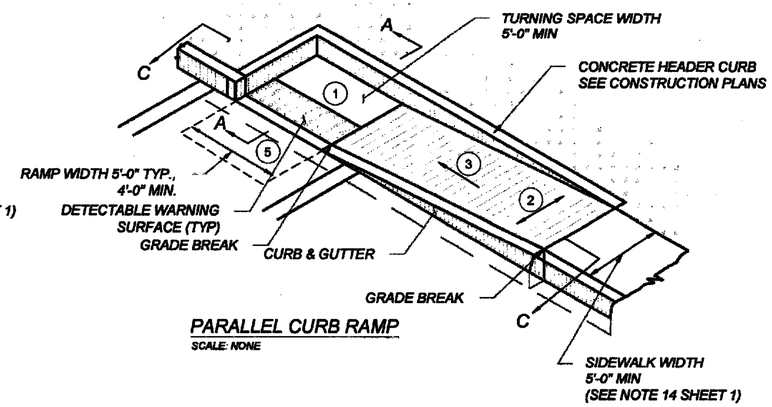

PARALLEL CURB RAMP
SCALE: NONE

KEYED NOTES

1. TURNING SPACE SHALL HAVE MAXIMUM CROSS SLOPE AND LONGITUDINAL SLOPE OF 2.0% (RECOMMEND 1.5%). TURNING SPACE SHALL BE 4.0 FT BY 4.0 FT MIN (RECOMMEND 5.0 FT BY 5.0 FT) AT THE TOP OF THE CURB RAMP AND SHALL BE PERMITTED TO OVERLAP OTHER TURNING SPACES AND CLEAR SPACES. WHERE THE TURNING SPACE IS CONSTRAINED AT THE BACK OF SIDEWALK. THE TURNING SPACE SHALL BE 4.0 FT MIN BY 5.0 FT MIN. THE 5.0 FT SHALL BE PROVIDED IN THE DIRECTION OF THE RAMP RUN.
2. CROSS SLOPE SHALL BE 2.0% MAX (RECOMMENDED 1.5%). EXCEPTION: THE CROSS SLOPE OF CURB RAMPS AT PEDESTRIAN STREET CROSSING WITHOUT YIELD OR STOP CONTROL, TRAFFIC SIGNALS DESIGNED FOR THE GREEN PHASE, AND AT MIDBLOCK PEDESTRIAN STREET CROSSING, THE CROSS SLOPE IS PERMITTED TO MATCH STREET OR HIGHWAY GRADE.
3. RUNNING SLOPE OF THE CURB RAMP SHALL BE 8.3 % MAX (RECOMMENDED 7.0%) BUT SHALL NOT REQUIRE THE RAMP LENGTH TO EXCEED 15.0 FT TO AVOID CHASING THE SLOPE INDEFINITELY WHEN CONNECTING TO STEEP GRADES. WHEN APPLYING THE 15 FOOT MAX LENGTH, THE RUNNING SLOPE OF THE CURB RAMP SHALL BE EXTENDED AS FLAT AS MAXIMUM EXTENT PRACTICABLE.
4. GRADE BREAKS AT THE TOP AND BOTTOM OF CURB RAMPS RUNS SHALL BE PERPENDICULAR TO THE DIRECTION OF THE RAMP RUN. GRADE BREAKS SHALL NOT BE PERMITTED ON THE SURFACE OF RAMP RUNS AND TURNING SPACE. SURFACE SLOPES THAT MEET AT GRADE BREAKS SHALL BE FLUSH.
5. COUNTER SLOPE OF THE GUTTER OR STREET AT THE FOOT OF A CURB RAMP, RUN OR TURNING SPACE SHALL BE 5% MAX.
6. FLARED SIDES ARE TO HAVE A SLOPE OF 10% MAX (RECOMMEND 9%), MEASURED PARALLEL TO THE BACK OF THE CURB, UNLESS THE FLARED SIDES ARE PROTECTED FROM CROSS TRAVEL BY LANDSCAPING, STREET FURNITURE, CHAINS, FENCING, OR RAILINGS.

NOTES:

- (A) DO NOT SCORE OR MAKE GROOVES IN SLOPED SURFACE. LINES SHOWN ON STANDARD DETAILS ARE FOR ILLUSTRATION ONLY.
- (B) DETAILS OF THE DETECTABLE WARNING SURFACE ARE SHOWN IN THE CONSTRUCTION PLANS AND SHEET 608-001-8/12 OF THE STANDARD DRAWINGS.
- (C) IN ALTERATIONS WHERE EXISTING PHYSICAL CONSTRAINTS PREVENT COMPLIANCE TO PROVIDE A CURB RAMP FOR EACH PEDESTRIAN CROSSING A SINGLE DIAGONAL CURB RAMP SHALL BE PERMITTED TO SERVE BOTH PEDESTRIAN STREET CROSSINGS.
- (D) CONCRETE HEADER CURBS CONSTRUCTED AS PART OF THE CURB RAMP WILL BE CONSIDERED INCIDENTAL TO ITEM NUMBER 608004 AND NO SEPARATE PAYMENT WILL BE MADE.

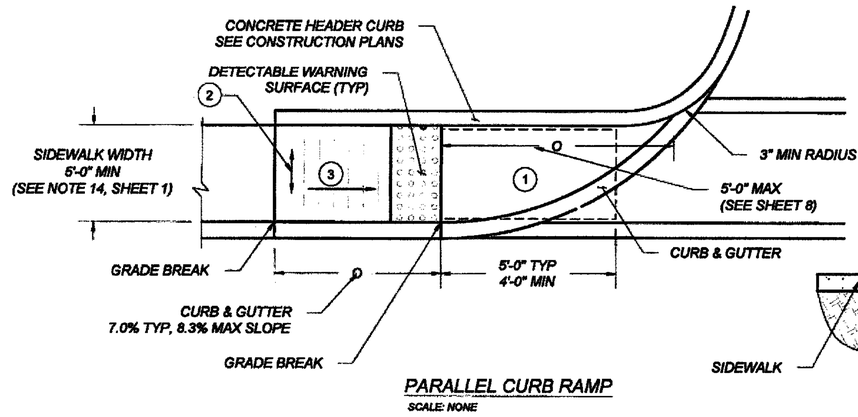

PARALLEL CURB RAMP
SCALE: NONE

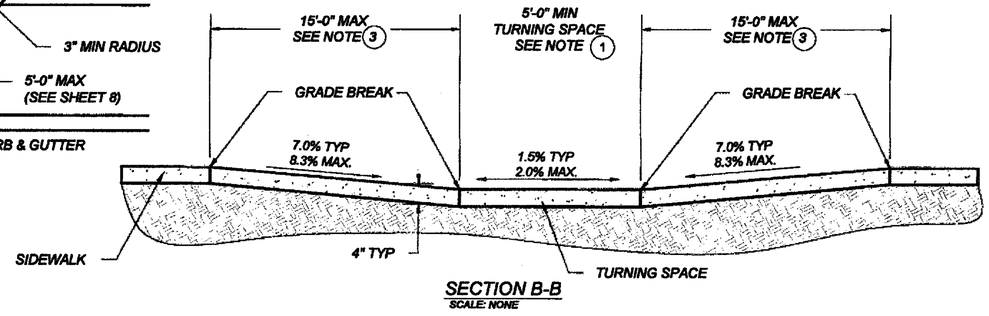

SECTION B-B
SCALE: NONE

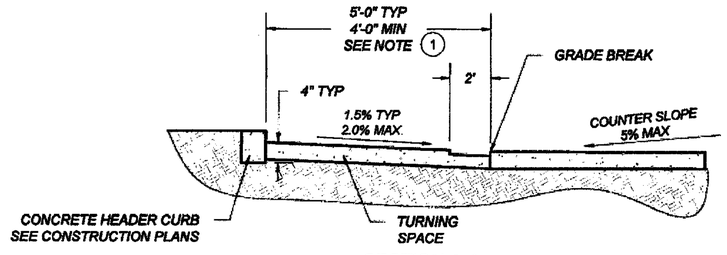

SECTION A-A
SCALE: NONE

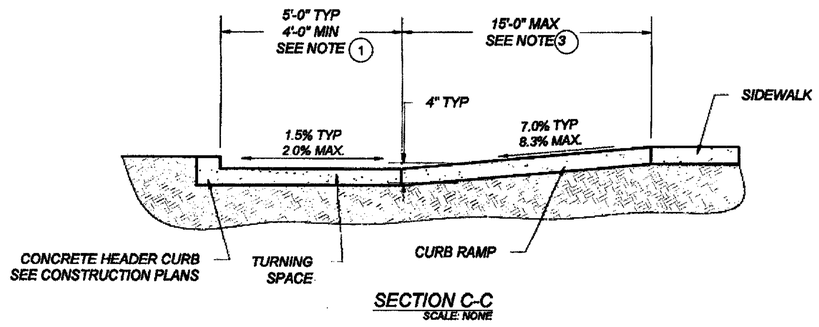

SECTION C-C
SCALE: NONE

NO.	DATE	REV. BY	DESCRIPTION

REVISIONS (OR CHANGE NOTICES)

NEW MEXICO
DEPARTMENT OF TRANSPORTATION
STANDARD DRAWING

PARALLEL
CURB RAMPS

APPROVED _____ DESIGN ENGINEER 1-13-15 DATE

608-001-3

608- 3 of 12

file path

DRAWING SCALE = NOT TO SCALE

13-8C

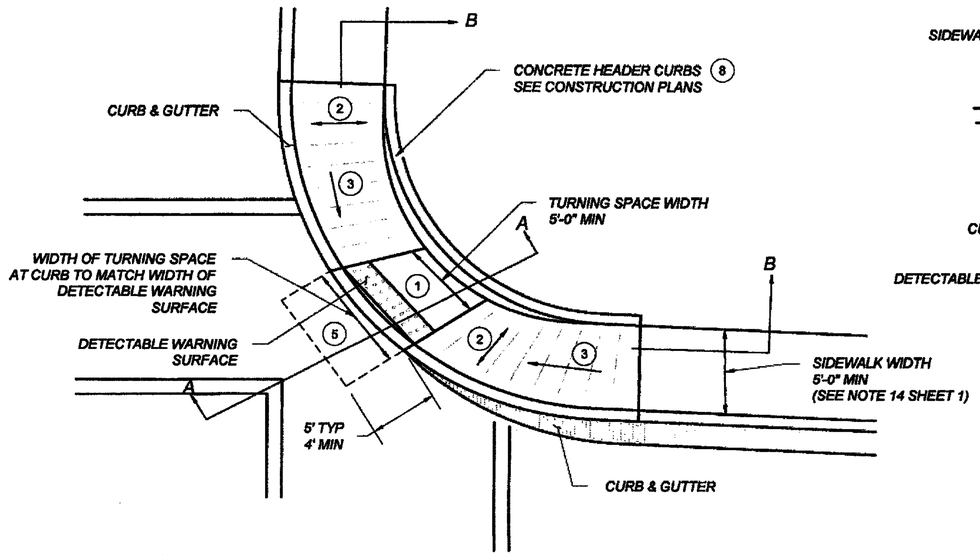

SINGLE DIAGONAL
PARALLAL CURB RAMP
SCALE: NONE

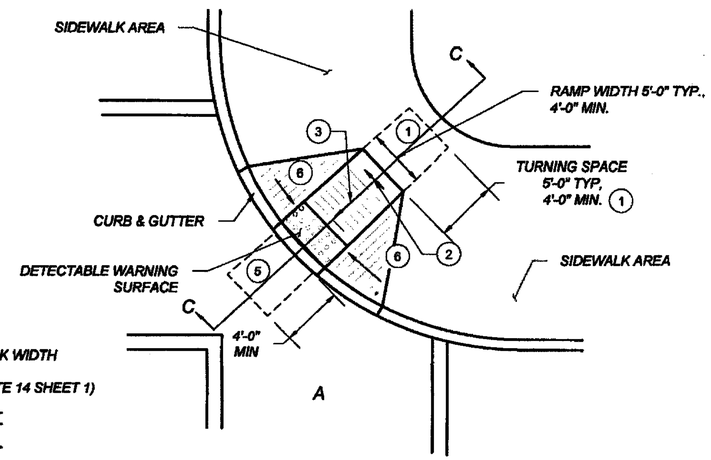

SINGLE DIAGONAL
PERPENDICULAR CURB RAMP
SCALE: NONE

KEYED NOTES

(1) TURNING SPACE SHALL HAVE MAXIMUM CROSS SLOPE AND LONGITUDINAL SLOPE OF 2.0% (RECOMMEND 1.5%). TURNING SPACE SHALL BE 4.0 FT BY 4.0 FT MIN (RECOMMEND 5.0 FT BY 5.0 FT) AT THE TOP OF THE CURB RAMP AND SHALL BE PERMITTED TO OVERLAP OTHER TURNING SPACES AND CLEAR SPACES. WHERE THE TURNING SPACE IS CONSTRAINED AT THE BACK OF SIDEWALK, THE TURNING SPACE SHALL BE 4.0 FT MIN BY 5.0 FT MIN. THE 5.0 FT SHALL BE PROVIDED IN THE DIRECTION OF THE RAMP RUN.

(2) CROSS SLOPE SHALL BE 2.0% MAX (RECOMMENDED 1.5%). EXCEPTION: THE CROSS SLOPE OF CURB RAMPS AT PEDESTRIAN STREET CROSSING WITHOUT YIELD OR STOP CONTROL, TRAFFIC SIGNALS DESIGNED FOR THE GREEN PHASE, AND AT MIDBLOCK PEDESTRIAN STREET CROSSING, THE CROSS SLOPE IS PERMITTED TO MATCH STREET OR HIGHWAY GRADE.

(3) RUNNING SLOPE OF THE CURB RAMP SHALL BE 8.3 % MAX (RECOMMENDED 7.0%) BUT SHALL NOT REQUIRE THE RAMP LENGTH TO EXCEED 15.0 FT TO AVOID CHASING THE SLOPE INDEFINITELY WHEN CONNECTING TO STEEP GRADES. WHEN APPLYING THE 15 FOOT MAX LENGTH, THE RUNNING SLOPE OF THE CURB RAMP SHALL BE EXTENDED AS FLAT AS MAXIMUM EXTENT PRACTICABLE.

(4) GRADE BREAKS AT THE TOP AND BOTTOM OF CURB RAMPS RUNS SHALL BE PERPENDICULAR TO THE DIRECTION OF THE RAMP RUN. GRADE BREAKS SHALL NOT BE PERMITTED ON THE SURFACE OF RAMP RUNS AND TURNING SPACE. SURFACE SLOPES THAT MEET AT GRADE BREAKS SHALL BE FLUSH.

(5) COUNTER SLOPE OF THE GUTTER OR STREET AT THE FOOT OF A CURB RAMP, RUN OR TURNING SPACE SHALL BE 5% MAX.

(6) FLARED SIDES ARE TO HAVE A SLOPE OF 10% MAX (RECOMMEND 9%), MEASURED PARALLEL TO THE BACK OF THE CURB, UNLESS THE FLARED SIDES ARE PROTECTED FROM CROSS TRAVEL BY LANDSCAPING, STREET FURNITURE, CHAINS, FENCING, OR RAILINGS.

NOTES:

(A) DO NOT SCORE OR MAKE GROOVES IN SLOPED SURFACE. LINES SHOWN ON STANDARD DETAILS ARE FOR ILLUSTRATION ONLY.

(B) DETAILS OF THE DETECTABLE WARNING SURFACE ARE SHOWN IN THE CONSTRUCTION PLANS AND SHEET 608-001-8/12 OF THE STANDARD DRAWINGS.

(C) IN ALTERATIONS WHERE EXISTING PHYSICAL CONSTRAINTS PREVENT COMPLIANCE TO PROVIDE A CURB RAMP FOR EACH PEDESTRIAN CROSSING A SINGLE DIAGONAL CURB RAMP SHALL BE PERMITTED TO SERVE BOTH PEDESTRIAN STREET CROSSINGS.

(D) CONCRETE HEADER CURBS CONSTRUCTED AS PART OF THE CURB RAMP WILL BE CONSIDERED INCIDENTAL TO ITEM NUMBER 608004 AND NO SEPARATE PAYMENT WILL BE MADE.

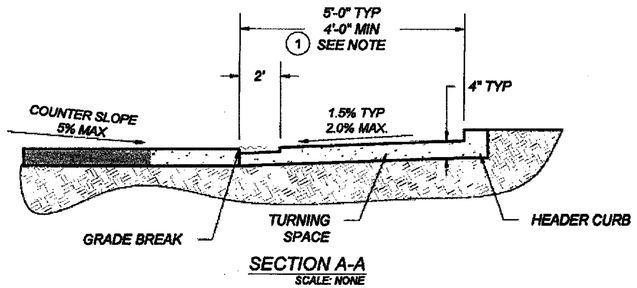

SECTION A-A
SCALE: NONE

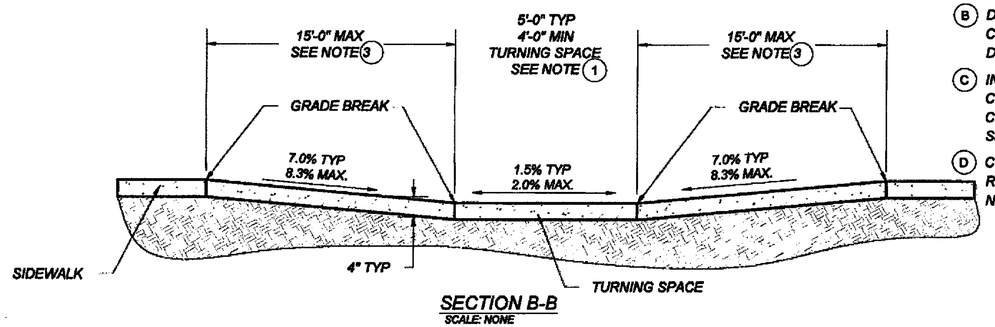

SECTION B-B
SCALE: NONE

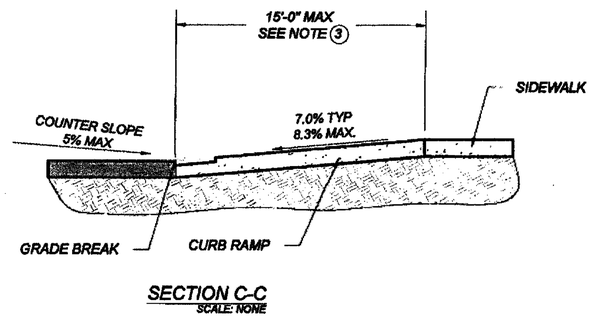

SECTION C-C
SCALE: NONE

NO.	DATE	REV. BY	DESCRIPTION

REVISIONS (OR CHANGE NOTICES)

NEW MEXICO
DEPARTMENT OF TRANSPORTATION
STANDARD DRAWING

DIAGONAL
CURB RAMPS

APPROVED _____ DESIGN ENGINEER 1-13-15 DATE

608-001-4

608- 4 of 12

file path

DRAWING SCALE = NOT TO SCALE

13-8D

SUMMARY
FILENAME

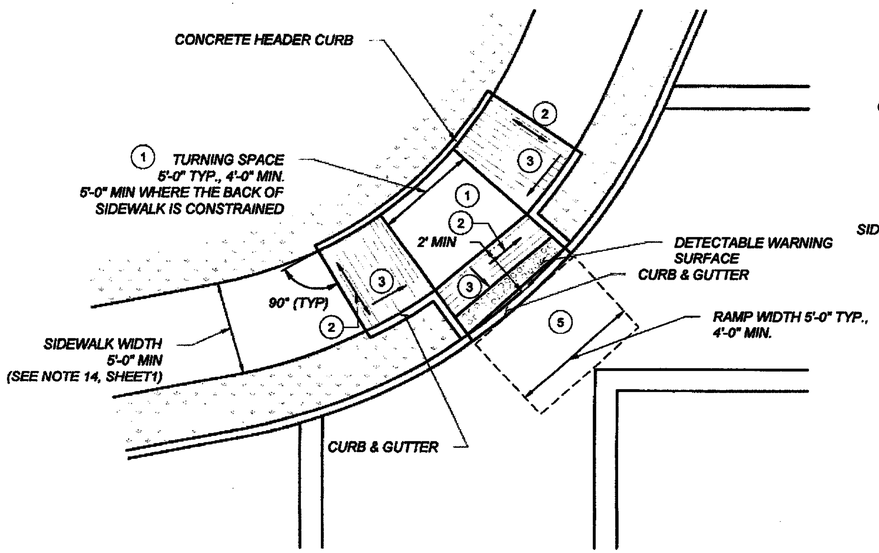

COMBINATION CURB RAMP (A)

DIAGONAL

SCALE: NONE

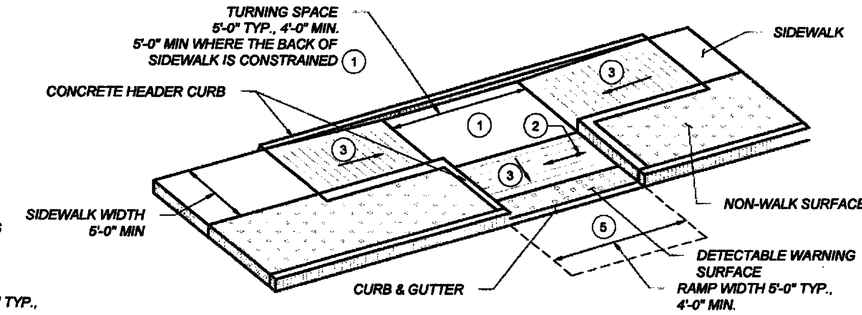

COMBINATION CURB RAMP (B)

SCALE: NONE

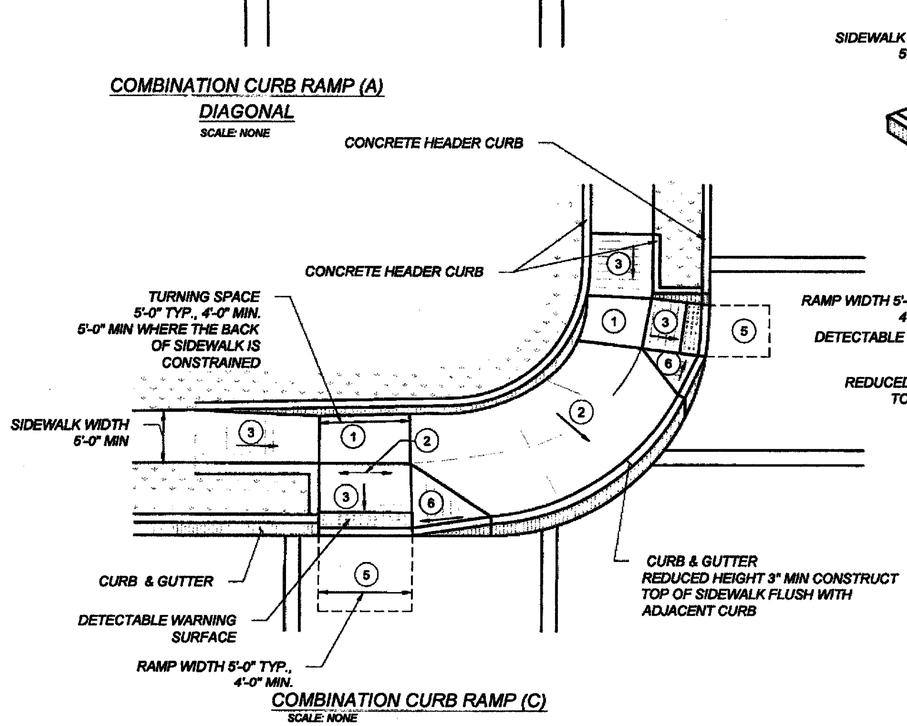

COMBINATION CURB RAMP (C)

SCALE: NONE

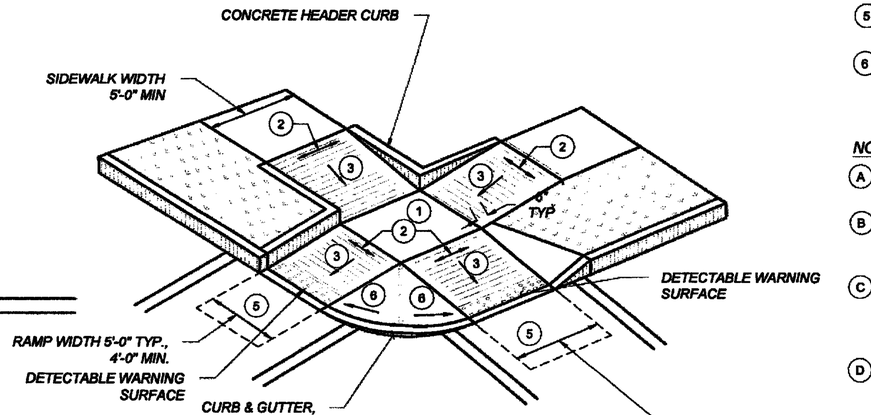

COMBINATION CURB RAMP (D)

WITH SHARED TURNING SPACE

SCALE: NONE

KEYED NOTES

1. TURNING SPACE SHALL HAVE MAXIMUM CROSS SLOPE AND LONGITUDINAL SLOPE OF 2.0% (RECOMMEND 1.5%). TURNING SPACE SHALL BE 4.0 FT BY 4.0 FT MIN (RECOMMEND 5.0 FT BY 5.0 FT) AT THE TOP OF THE CURB RAMP AND SHALL BE PERMITTED TO OVERLAP OTHER TURNING SPACES AND CLEAR SPACES. WHERE THE TURNING SPACE IS CONSTRAINED AT THE BACK OF SIDEWALK, THE TURNING SPACE SHALL BE 4.0 FT MIN BY 5.0 FT MIN. THE 5.0 FT SHALL BE PROVIDED IN THE DIRECTION OF THE RAMP RUN.
2. CROSS SLOPE SHALL BE 2.0% MAX (RECOMMENDED 1.5%). EXCEPTION: THE CROSS SLOPE OF CURB RAMPS AT PEDESTRIAN STREET CROSSING WITHOUT YIELD OR STOP CONTROL, TRAFFIC SIGNALS DESIGNED FOR THE GREEN PHASE, AND AT MIDBLOCK PEDESTRIAN STREET CROSSING, THE CROSS SLOPE IS PERMITTED TO MATCH STREET OR HIGHWAY GRADE.
3. RUNNING SLOPE OF THE CURB RAMP SHALL BE 8.3 % MAX (RECOMMENDED 7.0%) BUT SHALL NOT REQUIRE THE RAMP LENGTH TO EXCEED 15.0 FT TO AVOID CHASING THE SLOPE INDEFINITELY WHEN CONNECTING TO STEEP GRADES. WHEN APPLYING THE 15 FOOT MAX LENGTH, THE RUNNING SLOPE OF THE CURB RAMP SHALL BE EXTENDED AS FLAT AS MAXIMUM EXTENT PRACTICABLE.
4. GRADE BREAKS AT THE TOP AND BOTTOM OF CURB RAMPS RUNS SHALL BE PERPENDICULAR TO THE DIRECTION OF THE RAMP RUN. GRADE BREAKS SHALL NOT BE PERMITTED ON THE SURFACE OF RAMP RUNS AND TURNING SPACE. SURFACE SLOPES THAT MEET AT GRADE BREAKS SHALL BE FLUSH.
5. COUNTER SLOPE OF THE GUTTER OR STREET AT THE FOOT OF A CURB RAMP, RUN OR TURNING SPACE SHALL BE 5% MAX.
6. FLARED SIDES ARE TO HAVE A SLOPE OF 10% MAX (RECOMMEND 9%), MEASURED PARALLEL TO THE BACK OF THE CURB, UNLESS THE FLARED SIDES ARE PROTECTED FROM CROSS TRAVEL BY LANDSCAPING, STREET FURNITURE, CHAINS, FENCING, OR RAILINGS.

NOTES:

A. DO NOT SCORE OR MAKE GROOVES IN SLOPED SURFACE. LINES SHOWN ON STANDARD DETAILS ARE FOR ILLUSTRATION ONLY.

B. DETAILS OF THE DETECTABLE WARNING SURFACE ARE SHOWN IN THE CONSTRUCTION PLANS AND SHEET 608-001-8/12 OF THE STANDARD DRAWINGS.

C. IN ALTERATIONS WHERE EXISTING PHYSICAL CONSTRAINTS PREVENT COMPLIANCE TO PROVIDE A CURB RAMP FOR EACH PEDESTRIAN CROSSING A SINGLE DIAGONAL CURB RAMP SHALL BE PERMITTED TO SERVE BOTH PEDESTRIAN STREET CROSSINGS

D. CONCRETE HEADER CURBS CONSTRUCTED AS PART OF THE CURB RAMP WILL BE CONSIDERED INCIDENTAL TO ITEM NUMBER 608004 AND NO SEPARATE PAYMENT WILL BE MADE.

MICHAEL J. SMELKER
NEW MEXICO
15350
LICENSED PROFESSIONAL ENGINEER
1-13-15

NO.	DATE	REV. BY	DESCRIPTION

REVISIONS (OR CHANGE NOTICES)

NEW MEXICO
DEPARTMENT OF TRANSPORTATION
STANDARD DRAWING

COMBINATION
CURB RAMPS

APPROVED _____ DESIGN ENGINEER _____ 1-13-15 DATE

608-001-5

608- 5 of 12

file path

DRAWING SCALE = NOT TO SCALE

13-8E

SUMMARY
FILENAME

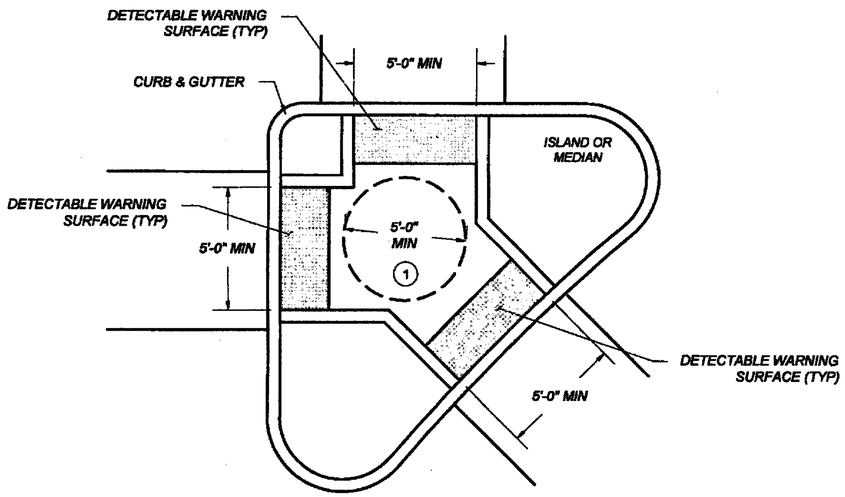

PEDESTRIAN REFUGE ISLAND
CURB RAMP
SCALE: NONE

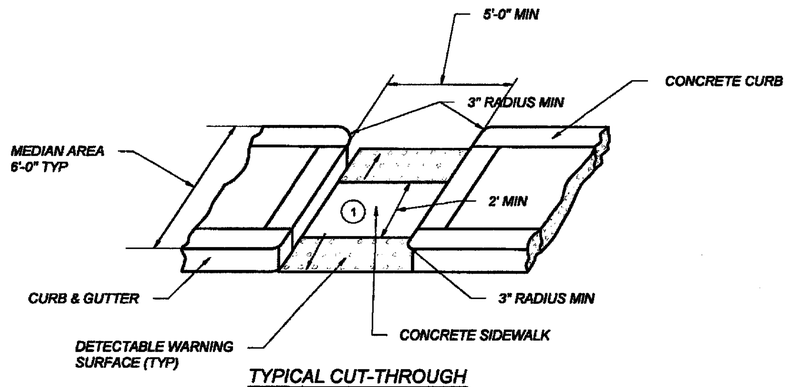

TYPICAL CUT-THROUGH
PEDESTRIAN REFUGE ISLAND
OPENING WITH CURB SIDES
SCALE: NONE

KEYED NOTES

1. TURNING SPACE SHALL HAVE MAXIMUM CROSS SLOPE AND LONGITUDINAL SLOPE OF 2.0% (RECOMMEND 1.5%). TURNING SPACE SHALL BE 4.0 FT BY 4.0 FT MIN (RECOMMEND 5.0 FT BY 5.0 FT) AT THE TOP OF THE CURB RAMP AND SHALL BE PERMITTED TO OVERLAP OTHER TURNING SPACES AND CLEAR SPACES. WHERE THE TURNING SPACE IS CONSTRAINED AT THE BACK OF SIDEWALK, THE TURNING SPACE SHALL BE 4.0 FT MIN BY 5.0 FT MIN. THE 5.0 FT SHALL BE PROVIDED IN THE DIRECTION OF THE RAMP RUN.
2. CROSS SLOPE SHALL BE 2.0% MAX (RECOMMENDED 1.5%). EXCEPTION: THE CROSS SLOPE OF CURB RAMPS AT PEDESTRIAN STREET CROSSING WITHOUT YIELD OR STOP CONTROL, TRAFFIC SIGNALS DESIGNED FOR THE GREEN PHASE, AND AT MIDBLOCK PEDESTRIAN STREET CROSSING, THE CROSS SLOPE IS PERMITTED TO MATCH STREET OR HIGHWAY GRADE.
3. RUNNING SLOPE OF THE CURB RAMP SHALL BE 8.3 % MAX (RECOMMENDED 7.0%) BUT SHALL NOT REQUIRE THE RAMP LENGTH TO EXCEED 15.0 FT TO AVOID CHASING THE SLOPE INDEFINITELY WHEN CONNECTING TO STEEP GRADES. WHEN APPLYING THE 15 FOOT MAX LENGTH, THE RUNNING SLOPE OF THE CURB RAMP SHALL BE EXTENDED AS FLAT AS MAXIMUM EXTENT PRACTICABLE.
4. GRADE BREAKS AT THE TOP AND BOTTOM OF CURB RAMPS RUNS SHALL BE PERPENDICULAR TO THE DIRECTION OF THE RAMP RUN. GRADE BREAKS SHALL NOT BE PERMITTED ON THE SURFACE OF RAMP RUNS AND TURNING SPACE. SURFACE SLOPES THAT MEET AT GRADE BREAKS SHALL BE FLUSH.
5. COUNTER SLOPE OF THE GUTTER OR STREET AT THE FOOT OF A CURB RAMP, RUN OR TURNING SPACE SHALL BE 5% MAX.
6. FLARED SIDES ARE TO HAVE A SLOPE OF 10% MAX (RECOMMEND 9%), MEASURED PARALLEL TO THE BACK OF THE CURB, UNLESS THE FLARED SIDES ARE PROTECTED FROM CROSS TRAVEL BY LANDSCAPING, STREET FURNITURE, CHAINS, FENCING, OR RAILINGS.

NOTES:

A. DO NOT SCORE OR MAKE GROOVES IN SLOPED SURFACE. LINES SHOWN ON STANDARD DETAILS ARE FOR ILLUSTRATION ONLY.
B. DETAILS OF THE DETECTABLE WARNING SURFACE ARE SHOWN IN THE CONSTRUCTION PLANS AND SHEET 608-001-8/12 OF THE STANDARD DRAWINGS.
C. IN ALTERATIONS WHERE EXISTING PHYSICAL CONSTRAINTS PREVENT COMPLIANCE TO PROVIDE A CURB RAMP FOR EACH PEDESTRIAN CROSSING A SINGLE DIAGONAL CURB RAMP SHALL BE PERMITTED TO SERVE BOTH PEDESTRIAN STREET CROSSINGS.
D. CONCRETE HEADER CURBS CONSTRUCTED AS PART OF THE CURB RAMP WILL BE CONSIDERED INCIDENTAL TO ITEM NUMBER 608004 AND NO SEPARATE PAYMENT WILL BE MADE.

NO.	DATE	REV. BY	DESCRIPTION

REVISIONS (OR CHANGE NOTICES)

NEW MEXICO
DEPARTMENT OF TRANSPORTATION
STANDARD DRAWING

PEDESTRIAN REFUGE ISLAND

APPROVED _____ DESIGN ENGINEER 1-13-15 DATE

608-001-6

608- 6 of 12

file path

DRAWING SCALE = NOT TO SCALE

13-8F

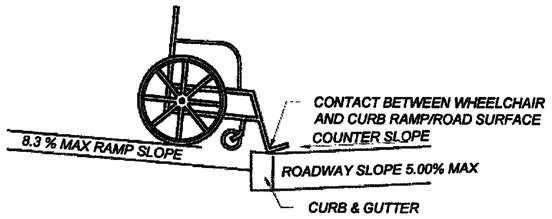

ALGEBRAIC DIFFERENCES BETWEEN ROADWAY SLOPE AND CURB RAMP SLOPE GREATER THAN 13.3% NOT PERMITTED.

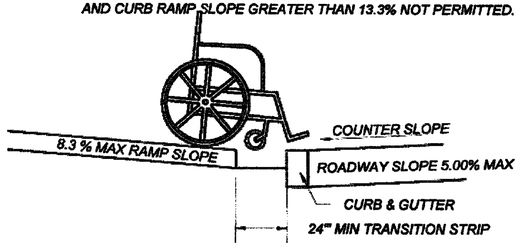

PROVIDE A 24" MIN TRANSITION STRIP IF ALGEBRAIC DIFFERENCES BETWEEN ROADWAY SLOPE AND CURB RAMP SLOPE ARE GREATER THAN 13.33%. TRANSITION STRIP SLOPE NOT TO EXCEED 5.00%

CHANGE OF GRADE LIMITATIONS
SCALE: NONE

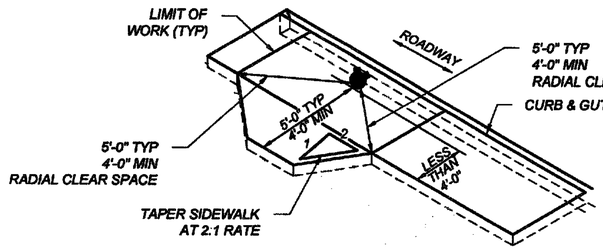

SIDEWALK ADDITION DUE TO OBSTRUCTIONS
SCALE: NONE

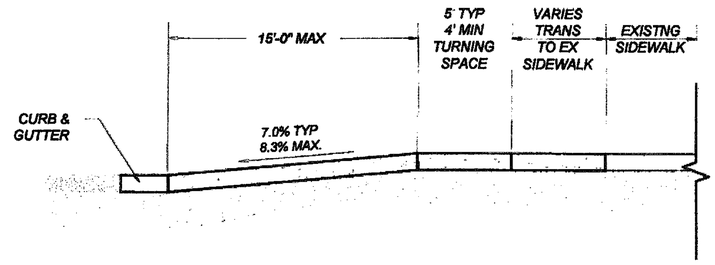

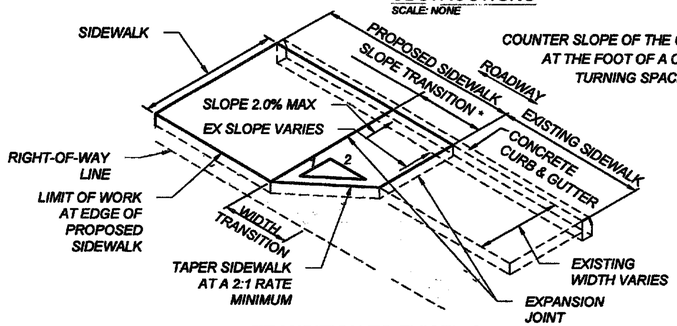

COUNTER SLOPE OF THE GUTTER OR STREET AT THE FOOT OF A CURB RAMP, RUN OR TURNING SPACE SHALL BE 5% MAX.

TRANSITION TO EXISTING SIDEWALK DETAIL
SCALE: NONE

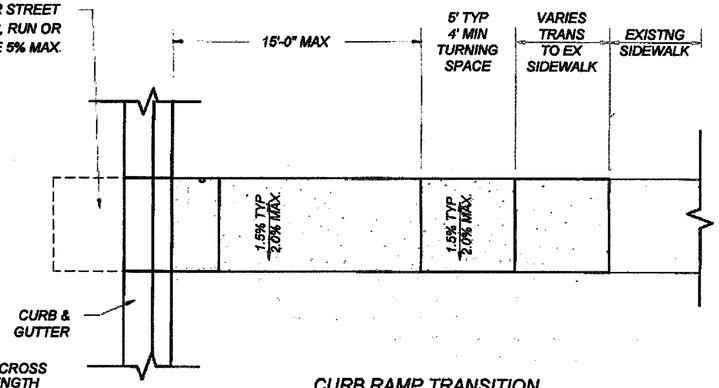

CURB RAMP TRANSITION TO EXISTING SIDEWALK DETAIL

MINIMUM SLOPE TRANSITION LENGTH BASED ON THE DIFFERENCE OF PROPOSED SIDEWALK CROSS SLOPE AND EXISTING SIDEWALK CROSS SLOPE AT THE LOCATION OF TIE IN. THIS MINIMUM LENGTH TO BE DETERMINED BY THE FOLLOWING FORMULA: DELTA % SLOPE X 0.5' OR MIN WIDTH OF 1 FT.

THE MINIMUM WIDTH TRANSITION SHALL BE CALCULATED USING THE FOLLOWING FORMULA:CHANGE IN WIDTH X 2.

DEPENDING ON WHICH IS LONGEST, EITHER THE SLOPE TRANSITION OR WIDTH TRANSITION WILL CONTROL THE LENGTH OF SIDEWALK TRANSITION.

TRANSITION AREAS SERVE AS TEMPORARY CONNECTIONS OF THE PEDESTRIAN ACCESS ROUTE. FUTURE IMPROVEMENTS TO THE REMAINING PORTION OF EXISTING SIDEWALK SHALL INCLUDE REMOVING THE TRANSITION AREA AND CONSTRUCTING A FULLY COMPLIANT SIDEWALK.

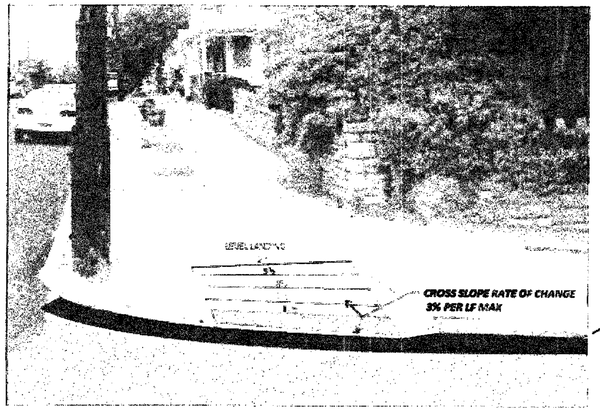

RAMP CROSS SLOPE TRANSITION TO MATCH ROADWAY PROFILE SLOPE
* SLOPES SHOWN ARE FOR ILLUSTRATION ONLY.

NOTE:
1) CROSS SLOPE OF CURB RAMP AT PEDESTRIAN STREET CROSSING WITHOUT YIELD ON STOP CONTROL, AND AT MID BLOCK PEDESTRIAN STREET CROSSING, THE CROSS SLOPE ARE PERMITTED TO EQUAL THE STREET OR HIGHWAY GRADE.

2) CROSS SLOPE IF CURB RAMP IS AT YIELD OR STOP CONTROL REQUIRES 2% MAX CROSS SLOPE AT CURB LINE

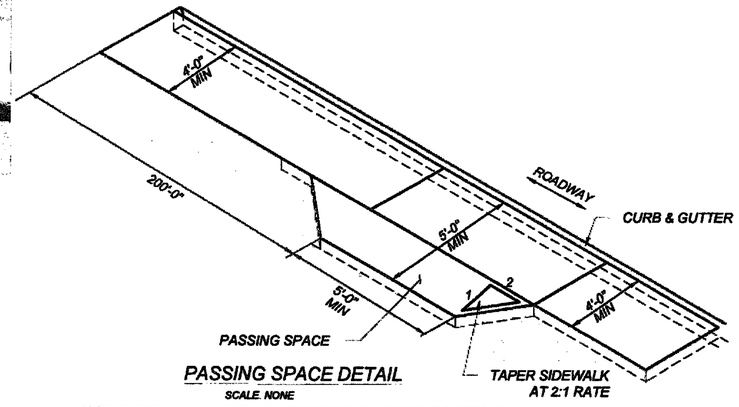

PASSING SPACE DETAIL
SCALE: NONE

1. WHERE THE CLEAR WIDTH OF PEDESTRIAN ACCESS ROUTES IS GREATER THAN 4ft AND LESS THAN 5ft, PASSING SPACES SHALL BE PROVIDED AT INTERVALS 200ft MAXIMUM.
2. PASSING SPACES ARE PERMITTED TO OVERLAP PEDESTRIAN ACCESS ROUTES.

MICHAEL J. SHUELKER
NEW MEXICO
15350
LICENSED PROFESSIONAL ENGINEER
1-13-15

NO.	DATE	REV. BY	DESCRIPTION
			REVISIONS (OR CHANGE NOTICES)

NEW MEXICO
DEPARTMENT OF TRANSPORTATION
STANDARD DRAWING

CURB RAMP AND SIDEWALK TRANSITION DETAILS

APPROVED _____ DESIGN ENGINEER 1-13-15 DATE

608-001-7

608- 7 of 12

file path

DRAWING SCALE = NOT TO SCALE

13-8G

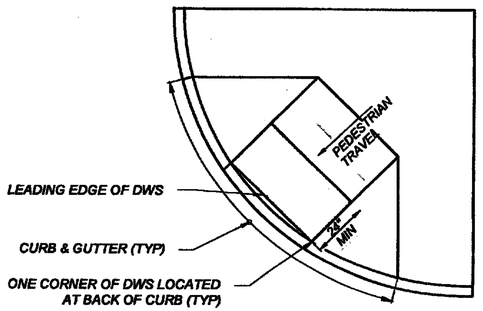

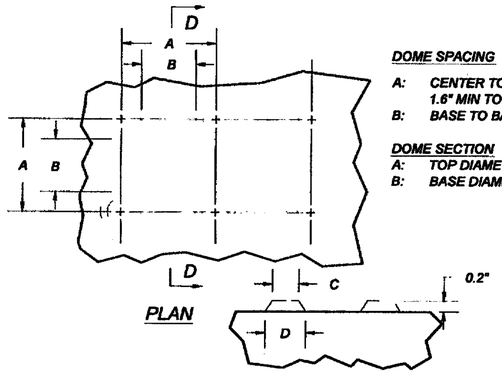

DOME SPACING

A: CENTER TO CENTER SPACING 1.6" MIN TO 2.4" MAX
B: BASE TO BASE SPACING 0.65" MIN

DOME SECTION

A: TOP DIAMETER 50%-65% OF D
B: BASE DIAMETER 0.9" TO 1.4" MAX

DETECTABLE WARNING SURFACE (DWS) TRUNCATED DOME DETAILS

SCALE: NONE

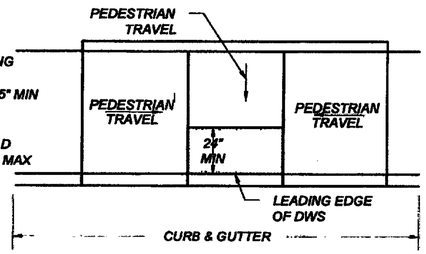

DETECTABLE WARNING SURFACE

SCALE: NONE

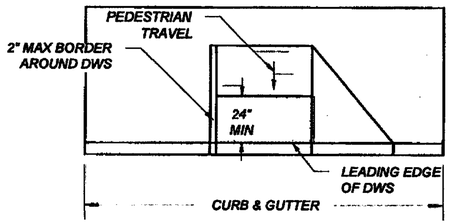

DETECTABLE WARNING SURFACE

SCALE: NONE

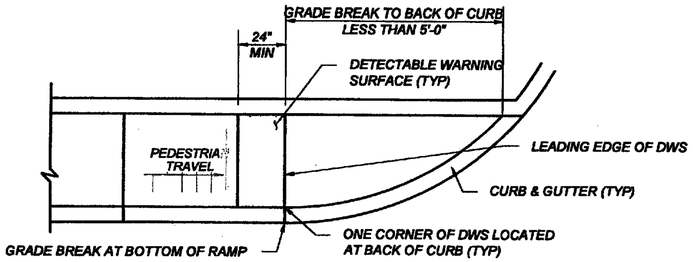

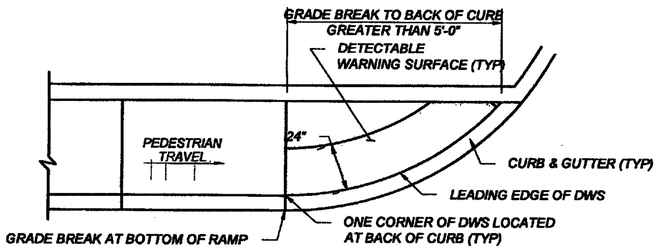

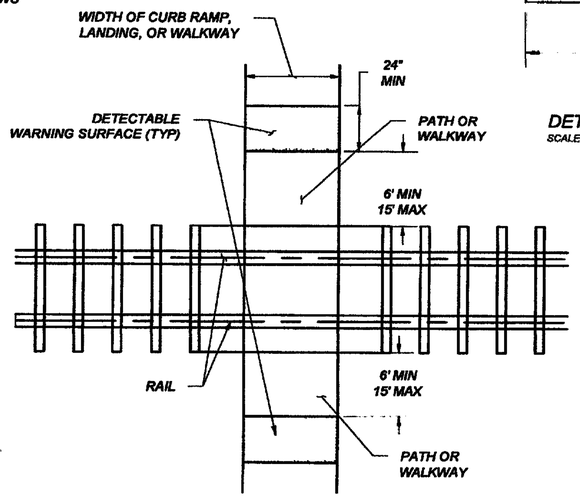

PEDESTRIAN AT-GRADE RAIL CROSSINGS

SCALE: NONE

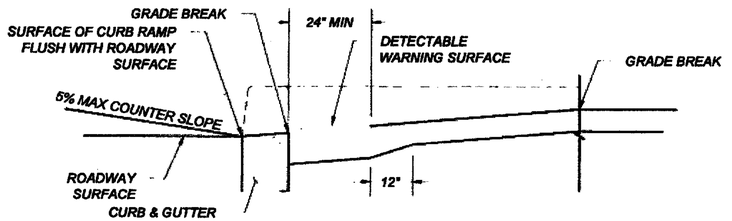

DETECTABLE WARNING SURFACE

SCALE: NONE

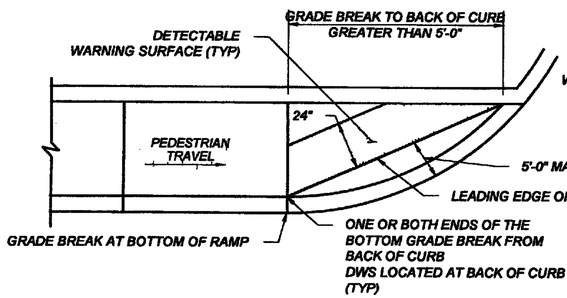

DETECTABLE WARNING SURFACE (DWS)ON CURVED SURFACES

SCALE: NONE

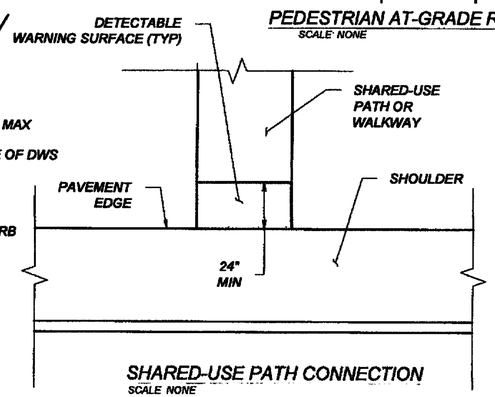

SHARED-USE PATH CONNECTION

SCALE: NONE

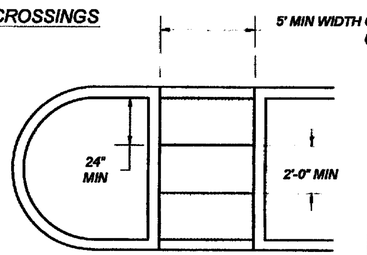

MEDIAN CUT-THROUGH

SCALE: NONE

EXCEPTION: IF THE LENGTH BETWEEN TWO DWS SURFACE IS LESS THAN 2' THEN DETECTABLE WARNING SURFACE WILL NOT BE INSTALLED

DETECTABLE WARNING SURFACE

SCALE: NONE

DETECTABLE WARING SURFACE (DWS):

A STANDARDIZED TRUNCATED DOME GRID SURFACE BUILT IN OR APPLIED TO THE PEDESTRIAN ACCESS ROUTE TO WARN VISUALLY IMPAIRED PEOPLE OF HAZARDS. THE SURFACE IS PLACED WHERE DETECTABLE WARNING SURFACE (DWS): A STANDARDIZED TRUNCATED DOME GRID SURFACE BUILT IN OR APPLIED TO THE PEDESTRIAN ACCESS ROUTE TO WARN VISUALLY IMPAIRED PEOPLE OF HAZARDS. THE SURFACE IS PLACED WHERE PEDESTRIANS WILL ENCOUNTER THE PRESENCE OF HAZARDS IN THE LINE OF TRAVEL, SUCH AS THE EDGE OF ROADWAY AND AT-GRADE RAIL CROSSINGS, INDICATING THEY SHOULD STOP AND DETERMINE THE NATURE OF THE HAZARD BEFORE PROCEEDING.

LOCATION:

1. THE DETECTABLE WARNING SURFACE (DWS) SHALL BE 2.0 FT MINIMUM WIDTH AND EXTENDED THE FULL WIDTH OF THE CURB RAMP RUN, TURNING SPACE, BLENDED TRANSITION, AN EXCLUDING ANY THE FLARED SIDES
2. THE ROWS OF TRUNCATED DOMES SHALL BE ALIGNED TO BE PERPENDICULAR TO THE GRADE BREAK AT THE BACK OF THE CURB.
3. THE ROWS OF TRUNCATED DOMES SHALL BE ALIGNED TO BE PARALLEL TO THE DIRECTION OF TRAVEL.
4. IF CURB AND GUTTER ARE NOT PRESENT, SUCH AS A SHARED-USE PATH CONNECTION, THE DETECTABLE WARNING SURFACE SHALL BE PLACED AT THE PAVEMENT EDGE.
5. PEDESTRIAN REFUGE ISLANDS SHALL HAVE DETECTABLE WARNINGS. DETECTABLE WARNINGS AT CUT THROUGH ISLANDS SHALL BE SEPARATED BY A 24 INCH MINIMUM LENGTH OF THE WALKWAY WITHOUT MARKINGS.

   EXCEPTION: DETECTABLE WARNINGS SHALL NOT BE REQUIRED ON CUT THROUGH ISLANDS WHERE THE CROSSING IS LESS THAN 6 FT IN THE DIRECTION OF PEDESTRIAN TRAVEL

NOTES:

1. DETAILS SPECIFIED ON THIS PLAN APPLY TO ALL CONSTRUCTION OR RECONSTRUCTION OF STREETS, CURBS, OR SIDEWALKS BY ALL PUBLIC AGENCIES AND BY ALL PRIVATE ORGANIZATIONS CONSTRUCTING FACILITIES FOR PUBLIC USE.
2. DETECTABLE WARNING SURFACE SHALL CONTRAST VISUALLY WITH ADJACENT GUTTER, WALKWAY SURFACES, EITHER LIGHT-ON-DARK OR DARK-ON-LIGHT FOR THE FULL WIDTH OF RAMP.
3. ALL PRODUCTS USED FOR DETECTABLE WARNING SURFACES SHALL BE ON THE DEPARTMENT'S APPROVED PRODUCT LIST.

MICHAEL J. SMELKER — NEW MEXICO — 15350 — LICENSED PROFESSIONAL ENGINEER
1-13-15

NO.	DATE	REV. BY	DESCRIPTION

REVISIONS (OR CHANGE NOTICES)

NEW MEXICO
DEPARTMENT OF TRANSPORTATION
STANDARD DRAWING

DETECTABLE WARNING SURFACE

APPROVED _____ DESIGN ENGINEER — 1-13-15 DATE

608-001-8

608- 8 of 12

file path

DRAWING SCALE = NOT TO SCALE

13-8H

SUMMARY
FILENAME

####

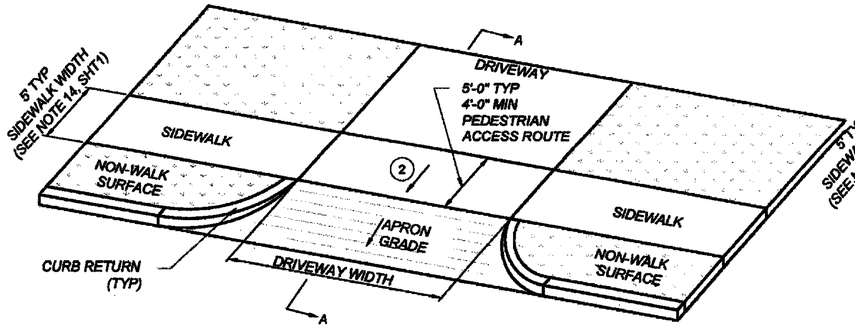

TYPE 2
DRIVEWAY APRON
SCALE: NONE

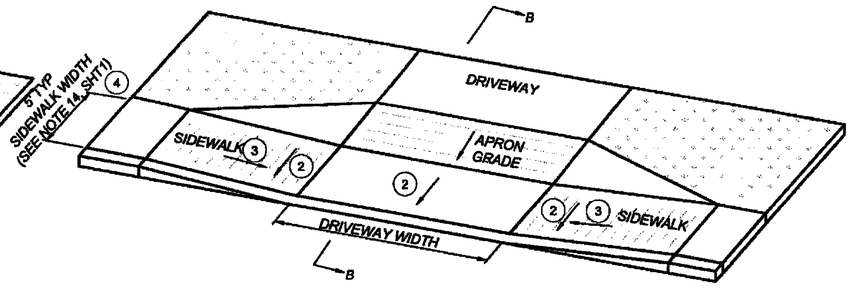

TYPE 3A
DRIVEWAY APRON
SCALE: NONE

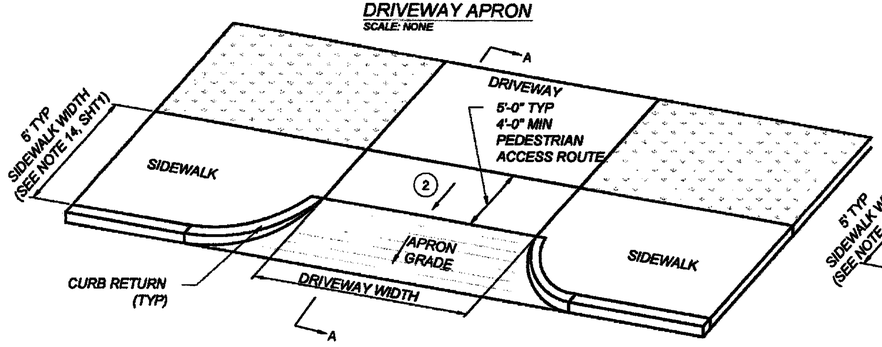

TYPE 2A
DRIVEWAY APRON
SCALE: NONE

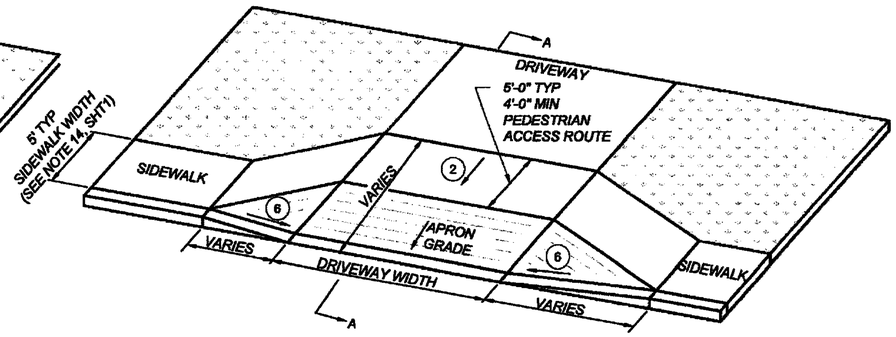

TYPE 2C
DRIVEWAY APRON
SCALE: NONE

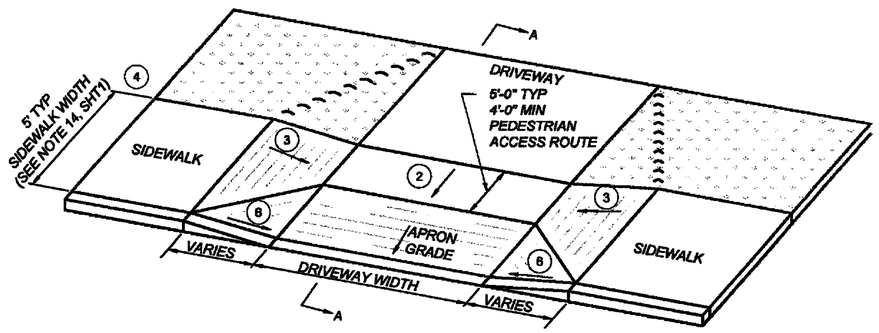

TYPE 2B
DRIVEWAY APRON
SCALE: NONE

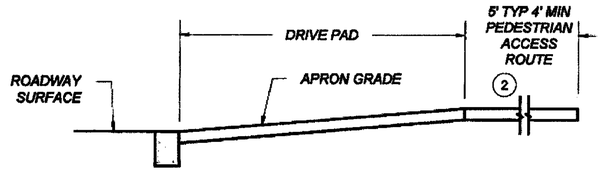

SECTION A-A
SCALE: NONE

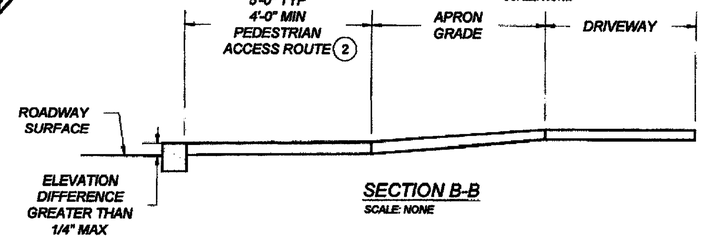

SECTION B-B
SCALE: NONE

KEYED NOTES

1. TURNING SPACE SHALL HAVE MAXIMUM CROSS SLOPE AND LONGITUDINAL SLOPE OF 2.0% (RECOMMEND 1.5%). TURNING SPACE SHALL BE 4.0 FT BY 4.0 FT MIN (RECOMMEND 5.0 FT BY 5.0 FT) AT THE TOP OF THE CURB RAMP AND SHALL BE PERMITTED TO OVERLAP OTHER TURNING SPACES AND CLEAR SPACES. WHERE THE TURNING SPACE IS CONSTRAINED AT THE BACK OF SIDEWALK, THE TURNING SPACE SHALL BE 4.0 FT MIN BY 5.0 FT MIN. THE 5.0 FT SHALL BE PROVIDED IN THE DIRECTION OF THE RAMP RUN.
2. CROSS SLOPE SHALL BE 2.0% MAX (RECOMMENDED 1.5%). EXCEPTION: THE CROSS SLOPE OF CURB RAMPS AT PEDESTRIAN STREET CROSSING WITHOUT YIELD OR STOP CONTROL, TRAFFIC SIGNALS DESIGNED FOR THE GREEN PHASE, AND AT MIDBLOCK PEDESTRIAN STREET CROSSING, THE CROSS SLOPE IS PERMITTED TO MATCH STREET OR HIGHWAY GRADE.
3. RUNNING SLOPE OF THE CURB RAMP SHALL BE 8.3 % MAX (RECOMMENDED 7.0%) BUT SHALL NOT REQUIRE THE RAMP LENGTH TO EXCEED 15.0 FT TO AVOID CHASING THE SLOPE INDEFINITELY WHEN CONNECTING TO STEEP GRADES. WHEN APPLYING THE 15 FOOT MAX LENGTH, THE RUNNING SLOPE OF THE CURB RAMP SHALL BE EXTENDED AS FLAT AS MAXIMUM EXTENT PRACTICABLE.
4. GRADE BREAKS AT THE TOP AND BOTTOM OF CURB RAMPS RUNS SHALL BE PERPENDICULAR TO THE DIRECTION OF THE RAMP RUN. GRADE BREAKS SHALL NOT BE PERMITTED ON THE SURFACE OF RAMP RUNS AND TURNING SPACE. SURFACE SLOPES THAT MEET AT GRADE BREAKS SHALL BE FLUSH.
5. COUNTER SLOPE OF THE GUTTER OR STREET AT THE FOOT OF A CURB RAMP, RUN OR TURNING SPACE SHALL BE 5% MAX.
6. FLARED SIDES ARE TO HAVE A SLOPE OF 10% MAX (RECOMMEND 9%), MEASURED PARALLEL TO THE BACK OF THE CURB, UNLESS THE FLARED SIDES ARE PROTECTED FROM CROSS TRAVEL BY LANDSCAPING, STREET FURNITURE, CHAINS, FENCING, OR RAILINGS.

NOTES:

A. DO NOT SCORE OR MAKE GROOVES IN SLOPED SURFACE. LINES SHOWN ON STANDARD DETAILS ARE FOR ILLUSTRATION ONLY.

B. DETAILS OF THE DETECTABLE WARNING SURFACE ARE SHOWN IN THE CONSTRUCTION PLANS AND SHEET 608-001-8/12 OF THE STANDARD DRAWINGS.

C. IN ALTERATIONS WHERE EXISTING PHYSICAL CONSTRAINTS PREVENT COMPLIANCE TO PROVIDE A CURB RAMP FOR EACH PEDESTRIAN CROSSING A SINGLE DIAGONAL CURB RAMP SHALL BE PERMITTED TO SERVE BOTH PEDESTRIAN STREET CROSSINGS.

D. CONCRETE HEADER CURBS CONSTRUCTED AS PART OF THE CURB RAMP WILL BE CONSIDERED INCIDENTAL TO ITEM NUMBER 608004 AND NO SEPARATE PAYMENT WILL BE MADE.

MICHAEL J. SMELKER
NEW MEXICO
15350
LICENSED PROFESSIONAL ENGINEER
1-18-15

NO.	DATE	REV. BY	DESCRIPTION

REVISIONS (OR CHANGE NOTICES)

NEW MEXICO
DEPARTMENT OF TRANSPORTATION
STANDARD DRAWING

DRIVEWAY APRONS

APPROVED _____ DESIGN ENGINEER 1-13-15 DATE

608-001-9

608- 9 of 12

file path

DRAWING SCALE = NOT TO SCALE

13-8I

SUMMARY
FILENAME

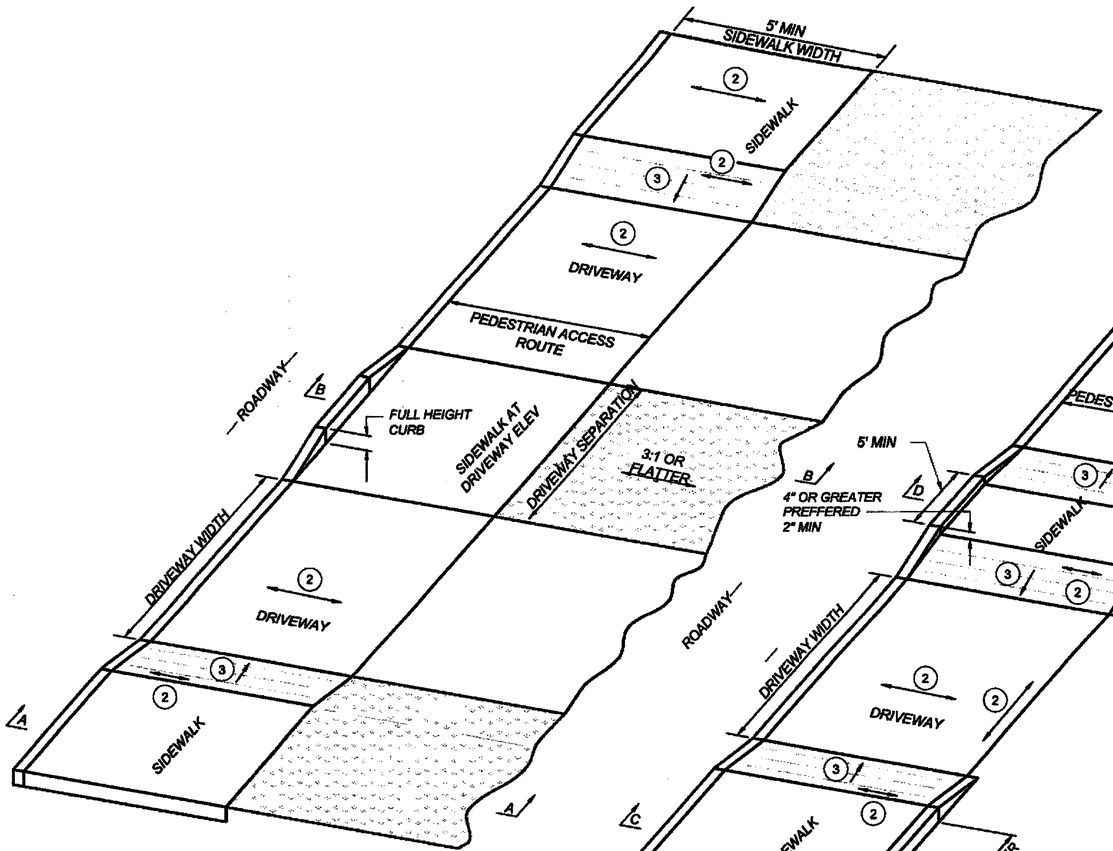

TYPE 5
MULTIPLE DRIVEWAYS
SCALE: NONE

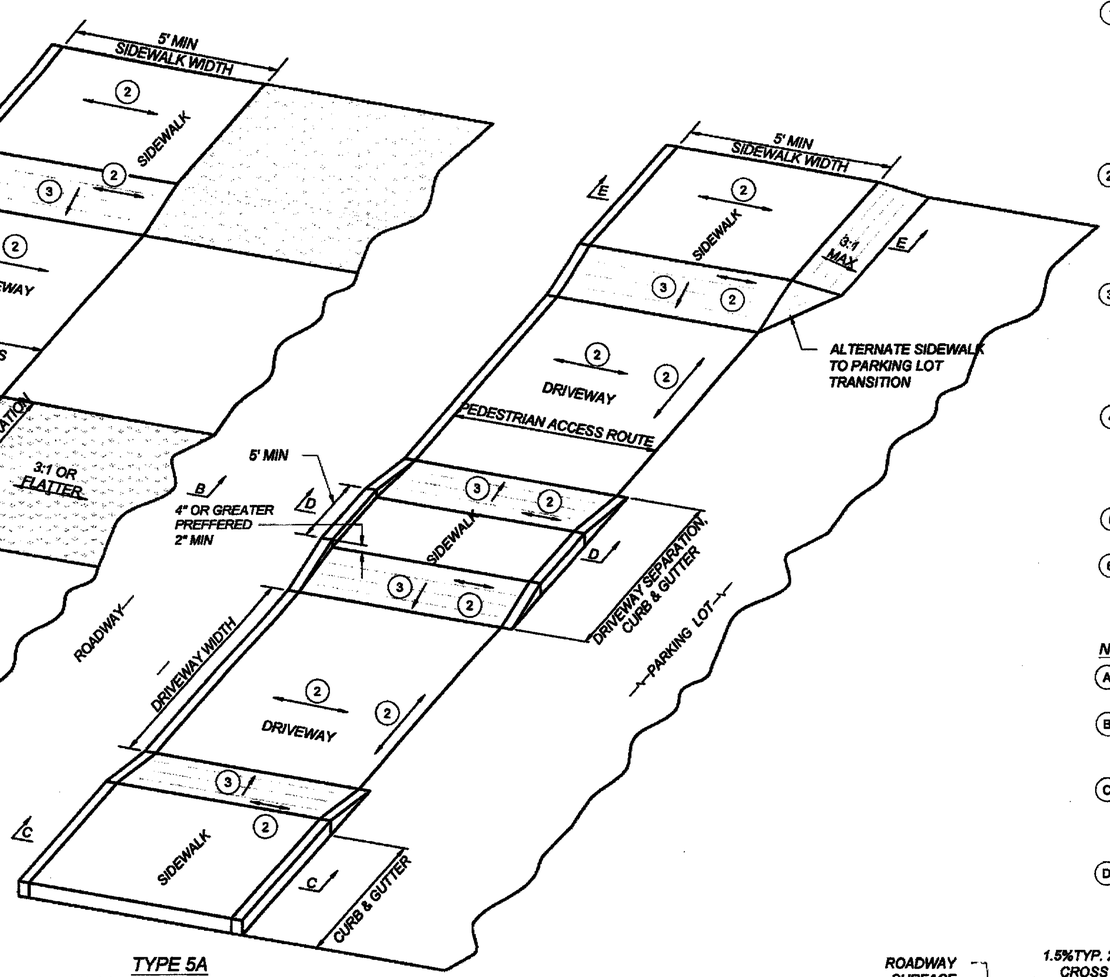

TYPE 5A
MULTIPLE DRIVEWAYS
SCALE: NONE

KEYED NOTES

1. TURNING SPACE SHALL HAVE MAXIMUM CROSS SLOPE AND LONGITUDINAL SLOPE OF 2.0% (RECOMMEND 1 5%). TURNING SPACE SHALL BE 4.0 FT BY 4.0 FT MIN (RECOMMEND 5.0 FT BY 5.0 FT) AT THE TOP OF THE CURB RAMP AND SHALL BE PERMITTED TO OVERLAP OTHER TURNING SPACES AND CLEAR SPACES. WHERE THE TURNING SPACE IS CONSTRAINED AT THE BACK OF SIDEWALK, THE TURNING SPACE SHALL BE 4.0 FT MIN BY 5.0 FT MIN. THE 5.0 FT SHALL BE PROVIDED IN THE DIRECTION OF THE RAMP RUN.
2. CROSS SLOPE SHALL BE 2.0% MAX (RECOMMENDED 1.5%). EXCEPTION: THE CROSS SLOPE OF CURB RAMPS AT PEDESTRIAN STREET CROSSING WITHOUT YIELD OR STOP CONTROL, TRAFFIC SIGNALS DESIGNED FOR THE GREEN PHASE, AND AT MIDBLOCK PEDESTRIAN STREET CROSSING, THE CROSS SLOPE IS PERMITTED TO MATCH STREET OR HIGHWAY GRADE.
3. RUNNING SLOPE OF THE CURB RAMP SHALL BE 8.3 % MAX (RECOMMENDED 7.0%) BUT SHALL NOT REQUIRE THE RAMP LENGTH TO EXCEED 15.0 FT TO AVOID CHASING THE SLOPE INDEFINITELY WHEN CONNECTING TO STEEP GRADES. WHEN APPLYING THE 15 FOOT MAX LENGTH, THE RUNNING SLOPE OF THE CURB RAMP SHALL BE EXTENDED AS FLAT AS MAXIMUM EXTENT PRACTICABLE.
4. GRADE BREAKS AT THE TOP AND BOTTOM OF CURB RAMPS RUNS SHALL BE PERPENDICULAR TO THE DIRECTION OF THE RAMP RUN. GRADE BREAKS SHALL NOT BE PERMITTED ON THE SURFACE OF RAMP RUNS AND TURNING SPACE. SURFACE SLOPES THAT MEET AT GRADE BREAKS SHALL BE FLUSH.
5. COUNTER SLOPE OF THE GUTTER OR STREET AT THE FOOT OF A CURB RAMP, RUN OR TURNING SPACE SHALL BE 5% MAX.
6. FLARED SIDES ARE TO HAVE A SLOPE OF 10% MAX (RECOMMEND 9%), MEASURED PARALLEL TO THE BACK OF THE CURB, UNLESS THE FLARED SIDES ARE PROTECTED FROM CROSS TRAVEL BY LANDSCAPING, STREET FURNITURE, CHAINS, FENCING, OR RAILINGS.

NOTES:

A. DO NOT SCORE OR MAKE GROOVES IN SLOPED SURFACE. LINES SHOWN ON STANDARD DETAILS ARE FOR ILLUSTRATION ONLY.

B. DETAILS OF THE DETECTABLE WARNING SURFACE ARE SHOWN IN THE CONSTRUCTION PLANS AND SHEET 608-001-8/12 OF THE STANDARD DRAWINGS.

C. IN ALTERATIONS WHERE EXISTING PHYSICAL CONSTRAINTS PREVENT COMPLIANCE TO PROVIDE A CURB RAMP FOR EACH PEDESTRIAN CROSSING A SINGLE DIAGONAL CURB RAMP SHALL BE PERMITTED TO SERVE BOTH PEDESTRIAN STREET CROSSINGS.

D. CONCRETE HEADER CURBS CONSTRUCTED AS PART OF THE CURB RAMP WILL BE CONSIDERED INCIDENTAL TO ITEM NUMBER 608004 AND NO SEPARATE PAYMENT WILL BE MADE.

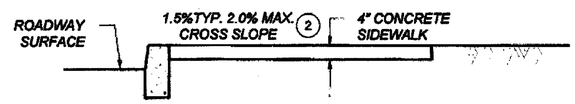

SECTION A-A
SCALE: NONE

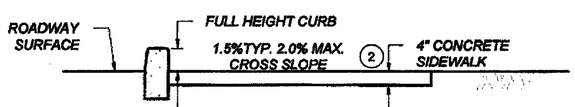

SECTION B-B
SCALE: NONE

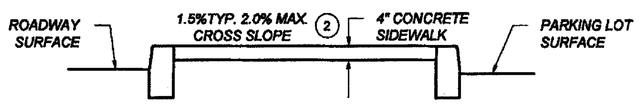

SECTION C-C
SCALE: NONE

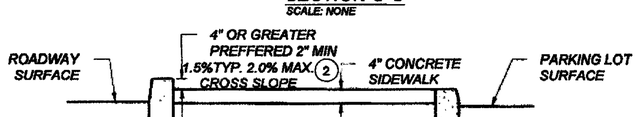

SECTION D-D
SCALE: NONE

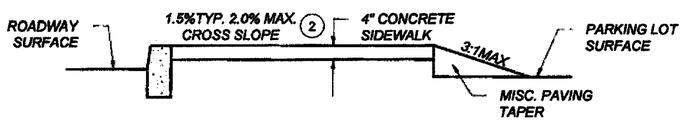

SECTION E-E
SCALE: NONE

MICHAEL J. SMELKER
NEW MEXICO
15350
LICENSED PROFESSIONAL ENGINEER
7-15-15

NO.	DATE	REV. BY	DESCRIPTION
REVISIONS (OR CHANGE NOTICES)			

NEW MEXICO
DEPARTMENT OF TRANSPORTATION
STANDARD DRAWING

DRIVEWAY APRONS

APPROVED _____ DESIGN ENGINEER 7-15-15 DATE

608-001-10

608- 10 of 12

file path

DRAWING SCALE = NOT TO SCALE

13-8J

STAIRWAY REQUIREMENTS

1. STAIRWAYS SHALL BE 4 FT WIDE MINIMUM BETWEEN HANDRAILS.
2. ALL STEPS ON A FLIGHT OF STAIRS SHALL HAVE UNIFORM RISER HEIGHTS AND UNIFORM TREAD DEPTH. RISERS SHALL BE 4 INCHES (100mm) HIGH MINIMUM AND 7 INCHES (180mm) MAXIMUM. TREADS SHALL BE 11 INCHES (280mm) DEEP MINIMUM MEASURED FROM RISER TO RISER.
3. OPEN RISERS SHALL NOT BE PERMITTED.
4. STAIR TREADS SHALL BE STABLE, FIRM, AND SLIP RESISTANT.
5. THE RADIUS OF CURVATURE AT THE LENDING EDGE OF THE TREAD SHALL BE ½ INCH (13mm) MAXIMUM. NOSINGS THAT PROJECT BEYOND RISERS SHALL HAVE THE UNDERSIDE OF THE LANDING EDGE CURVED OR BEVELED. RISERS SHALL BE PERMITTED TO SLOPE UNDER THE TREAD AT AN ANGLE OF 30 DEGREES MAXIMUM FROM THE VERTICAL. THE PERMITTED PROJECTION OF THE NOSING SHALL BE 1 INCHES (38mm) MAXIMUM BEYOND THE TREAD BELOW.
6. HANDRAILS SHALL BE PROVIDED ON BOTH SIDES OF STAIRS.
7. OUTDOOR STAIRS AND OUTDOOR APPROACHES TO STAIRS SHALL BE DESIGNED SO THAT WATER WILL NOT ACCUMULATE ON WALKING SURFACES.

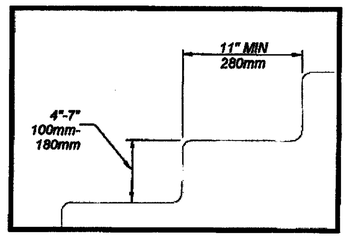

VERTICAL RISER

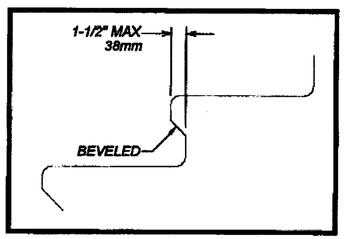

BEVELED RISER

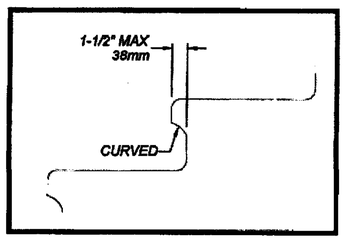

CURVED RISER

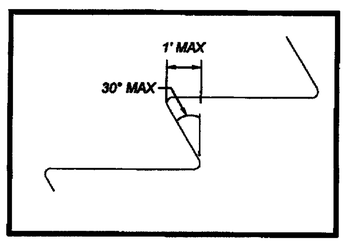

ANGLED RISER

HANDRAIL REQUIREMENTS

1. HANDRAILS SHALL BE PROVIDED ON BOTH SIDES OF STAIRS AND RAMPS.
2. HANDRAILS SHALL BE CONTINUOUS WITHIN THE FULL LENGTH OF EACH STAIR FLIGHT OR RAMP RUN. INSIDE HANDRAILS ON SWITCH BACK OR DOGLEG STAIRS OR RAMPS SHALL BE CONTINUOUS BETWEEN FLIGHTS OR RUNS.
3. TOP GRIPPING SURFACES OF HANDRAILS SHALL BE 34 INCHES (865mm) MINIMUM AND 38 INCHES (965mm) MAXIMUM VERTICALLY ABOVE STAIR NOSINGS AND RAMP SURFACES. HANDRAILS SHALL BE AT A CONSISTENT HEIGHT ABOVE STAIR NOSINGS AND RAMP SURFACES.
4. CLEAR SPACE BETWEEN HANDRAIL AND WALL SHALL BE 1 INCH (38mm) MINIMUM
5. GRIPPING SURFACES SHALL BE CONTINUOUS WITHOUT INTERRUPTION BY NEW POSTS OTHER CONSTRUCTION ELEMENTS, OR OBSTRUCTIONS.
   EXCEPTION:
   HANDRAIL BRACKETS OR BALUSTERS ATTACHED TO THE BOTTOM SURFACE OF THE HANDRAIL SHALL NOT BE CONSIDERED OBSTRUCTIONS PROVIDED THEY COMPLY WITH THE FOLLOWING CRITERIA:
   A. NOT MORE THAN 20 PERCENT OF THE HANDRAIL LENGTH IS OBSTRUCTED.
   B. HORIZONTAL PROJECTIONS BEYOND THE SIDES OF THE HANDRAIL OCCUR 2 INCHES (64mm) MINIMUM BELOW THE BOTTOM OF THE HANDRAIL AND
   C. EDGES HAVE 11 INCH (32MM) MINIMUM RADIUS.
6. HANDRAILS SHALL HAVE A CIRCULAR CROSS SECTION WITH AN OUTSIDE DIAMETER OD 1-1/4" or 1.25" INCH (32mm) MINIMUM AND 2 INCH (51mm) MAXIMUM OR SHALL PROVIDE EQUIVALENT GRASPABILITY. EXCEPTION: HANDRAILS WITH OTHER SHAPES SHALL BE PERMITTED PROVIDED THEY HAVE A PERIMETER DIMENSION OF 4 INCH (100mm) MINIMUM AND A 6.25 INCH(160mm) MAXIMUM AND PROVIDED THEIR LARGEST CROSS SECTION DIMENSION IS 2.25 INCH (57mm) MAXIMUM.
7. HANDRAILS AND ANY WALL OR OTHER SURFACES ADJACENT TO THEM, SHALL BE FREE OF ANY SHARP OR ABRASIVE ELEMENTS. EDGES SHALL HAVE 1 INCH (32mm) MINIMUM RADIUS.
8. HANDRAILS SHALL NOT ROTATE WITHIN THEIR FITTINGS.
9. HANDRAILS FOR STAIRS AND RAMPS SHALL HAVE EXTENSIONS.
   EXCEPTIONS:
   A. EXTENSIONS ARE NOT REQUIRED FOR CONTINUOUS HANDRAILS AT THE INSIDE TURN OF STAIRS AND RAMPS
   B. IN ALTERATIONS FULL EXTENSIONS OF HANDRAILS SHALL NOT BE REQUIRED WHERE SUCH EXTENSIONS WOULD BE HAZARDOUS OR IMPOSSIBLE DUE TO PLAN CONFIGURATION.
10. RAMP HANDRAILS SHALL EXTEND HORIZONTALLY 12 INCHES (305mm) MINIMUM BEYOND OF RAMP RUNS SUCH EXTENSION SHALL RETURN TO WALL GUARD OR THE WALKING SURFACE OR SHALL BE CONTINUOUS TO THE HANDRAIL OF AN ADJACENT RAMP RUN.
11. AT THE TOP OF A STAIR FLIGHT HANDRAILS SHALL EXTEND HORIZONTALLY ABOVE THE LANDING FOR 12 INCHES (305mm) MINIMUM BEGINNING DIRECTLY ABOVE THE FIRST RISER NOSING. SUCH EXTENSIONS SHALL RETURN TO A WALL, OR THE WALKING SURFACE, OR SHALL BE CONTINUOUS TO THE HANDRAIL OF AN ADJACENT STAIR FLIGHT.
12. AT THE BOTTOM OF THE STAIR FLIGHT HANDRAILS SHALL EXTEND AT THE SLOPE OF THE STAIR FLIGHT FOR A HORIZONTAL DISTANCE AT LEAST EQUAL TO ON TREAD DEPTH BEYOND THE LAST RISER NOSING. EXTENSIONS SHALL RETURN TO A WELL, GUARD, OR THE LANDING SURFACE, OR SHALL BE CONTINUOUS TO THE HANDRAIL OF AN ADJACENT STAIR FLIGHT.

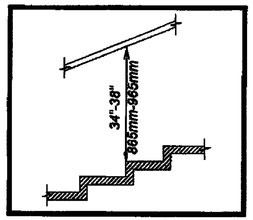

STAIR HANDRAIL HEIGHT

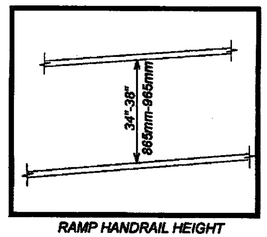

RAMP HANDRAIL HEIGHT

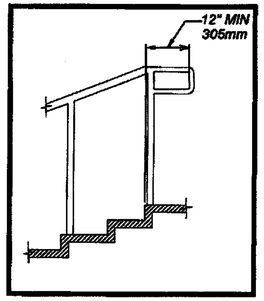

TOP HANDRAIL EXTENSION AT STAIRS

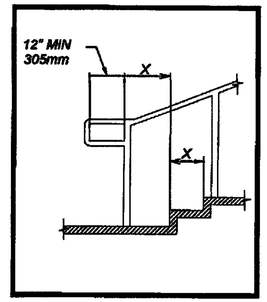

BOTTOM HANDRAIL EXTENSION AT STAIRS

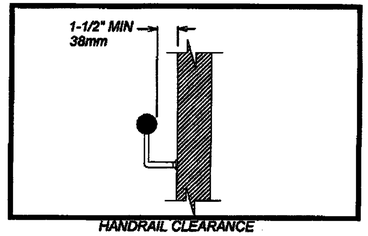

HANDRAIL CLEARANCE

MICHAEL J. SMELKER
NEW MEXICO
15350
LICENSED PROFESSIONAL ENGINEER
1-13-15

NO.	DATE	REV. BY	DESCRIPTION

REVISIONS (OR CHANGE NOTICES)

NEW MEXICO
DEPARTMENT OF TRANSPORTATION
STANDARD DRAWING

PEDESTRIAN ACCESS DETAILS
STAIRWAY AND HANDRAILS

APPROVED _____ DESIGN ENGINEER 1-13-15 DATE

608-001-11

608- 11 of 12

file path

DRAWING SCALE = NOT TO SCALE

13-8K

SUMMARY
FILENAME

ACCESSIBLE ROUTES:

ACCESSIBLE EXTERIOR ROUTES SHALL BE PROVIDED FROM TRANSPORTATION STOPS, ACCESSIBLE PARKING AND ACCESSIBLE PASSENGER LOADING ZONES AND PUBLIC SIDEWALKS TO THE ACCESSIBLE BUILDING ENTRANCE THEY SERVE. ACCESSIBLE PARKING SPACES SHALL BE LOCATED ON THE SHORTEST ACCESSIBLE ROUTE OF TRAVEL FROM ADJACENT PARKING TO AN ACCESSIBLE BUILDING ENTRANCE OR FACILITY

ACCESSIBLE PARKING REQUIREMENTS:

1. EACH FACILITY SHALL PROVIDE ACCESSIBLE PARKING SPACES IN COMPLIANCE WITH THE FOLLOWING TABLE:

NUMBER OF ACCESSIBLE PARKING SPACES

TOTAL PARKING SPACES	TOTAL REQUIRED ACCESSIBLE PARKING SPACES	NUMBER REQUIRED TO BE VAN ACCESSIBLE
1-25	1	1
26-35	2	1
36-50	3	1
51-100	4	1
101-300	8	2
301-500	12	2
501-800	16	3
801-1000	20	4
OVER 1,000	20 SPACES PLUS 1 SPACE FOR EVERY 100 SPACES, OR FRACTION THEREOF, OVER 1,000	1 OF EVERY 6 ACCESSIBLE PARKING SPACES, OR FRACTION THEREOF

2. CAR SPACES SHALL BE 96 INCHES (2440 mm) WIDE MINIMUM AND VAN PARKING SPACES SHALL BE 132 INCHES AND SHALL HAVE AN ADJACENT ACCESS AISLE.

3. ACCESS AISLES SERVING PARKING SPACES SHALL CONNECT TO THE BUILDING OR FACILITY ENTRANCE BY AN ACCESSIBLE SIDEWALK. TWO PARKING SPACES SHALL BE PERMITTED TO SHARE A COMMON ACCESS AISLE. THE VAN ACCESS AISLE IS PREFERRED TO BE AT THE RIGHT SIDE (PASSENGER SIDE) OF THE PARKING SPACE. (AN ACCESSIBLE SIDEWALK IS 60 INCHES (1525mm) MINIMUM CLEAR WIDTH, 50:1 MAXIMUM CROSS SLOPE WITH A RUNNING SLOPE OF 20:1 MAXIMUM OR THE RUNNING SLOPE MAY FOLLOW THE ADJACENT ROAD PROFILE GRADE.) PARKED VEHICLE OVERHANGS SHALL NOT REDUCE THE MINIMUM 48 INCH CLEAR WIDTH OF AN ACCESSIBLE ROUTE.

4. ACCESS AISLES SERVING CAR PARKING SPACES SHALL BE 60 INCHES (1525mm) WIDE MINIMUM. ACCESS AISLES SERVING VAN PARKING SPACES SHALL BE 96 INCHES (2440mm) WIDE MINIMUM.

5. ACCESS AISLES SHALL EXTEND THE FULL LENGTH OF THE PARKING SPACES THEY SERVE.

6. PARKING SPACES AND ACCESS AISLES SHALL HAVE SURFACE SLOPES NOT STEEPER THAN 50:1. ACCESS AISLES SHALL BE AT THE SAME LEVEL AS THE PARKING SPACES THEY SERVE.

7. PARKING SPACES FOR VANS SHALL HAVE A VERTICAL CLEARANCE OF 98 INCHES (2490mm) MINIMUM AT THE SPACE AND ALONG THE VEHICULAR ROUTE THERETO.

8. EACH ACCESSIBLE PARKING SPACE SHALL BE IDENTIFIED BY A SIGN ON A POST. SIGNS SHALL INCLUDE THE INTERNATIONAL SYMBOL OF ACCESSIBILITY. THE CLEARANCE TO THE BOTTOM OF THE SIGN (R7-8) SHALL BE AT LEAST 7 FEET (2100mm), LOCATED AT THE HEAD OF THE PARKING SPACE. VAN ACCESSIBLE PARKING SPACES SHALL HAVE AN ADDITIONAL SIGN (R7-8A) MOUNTED BELOW THE INTERNATIONAL SYMBOL OF ACCESS IDENTIFYING THE SPACE AS "VAN ACCESSIBLE." SIGNS MUST INCLUDE THE LANGUAGE "VIOLATORS ARE SUBJECT TO A FINE AND/OR TOWING .

9. PARKING SPACE AND ACCESS AISLES SHALL HAVE OSHA SAFETY BLUE STRIPING. STRIPING SHALL BE 4 INCHES (100mm) WIDE. ACCESS AISLES STRIPING SHALL BE 30 INCHES (760mm) ON CENTER ACCESS AISLE SHALL HAVE THE WORDS "NO PARKING" IN CAPITAL LETTER OF WHICH SHALL BE AT LEAST ONE FOOT HIGH AND AT LEAST TWO INCHES WIDE PLACED AT THE REAR OF THE PARKING SPACE SO AS TO BE CLOSE TO WHERE AN ADJACENT VEHICLES REAR TIRES WOULD BE PLACED.

10. EACH ACCESSIBLE PARKING SPACE SHALL INCLUDE, CENTERED AT THE FOOT, A PAVEMENT MARKING OF THE INTERNATIONAL SYMBOL OF ACCESSIBILITY TO BE CLEARLY VISIBLE WHEN THE SPACE IS OCCUPIED .

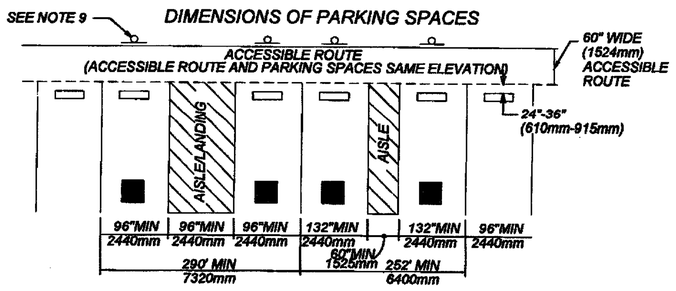

ACCESSIBLE PASSENGER LOADING ZONE REQUIREMENTS:

1. PASSENGER LOADING ZONES SHALL PROVIDE A 60 INCH (1525mm) WIDE ACCESS AISLE ADJACENT AND PARALLEL TO A VEHICLE PULL-UP SPACE. ACCESS AISLES SHALL BE 20 FEET (6100mm) LONG MINIMUM.

2. ACCESS AISLES SHALL BE PART OF THE ACCESSIBLE ROUTE TO THE BUILDING OR FACILITY ENTRANCE, AND MARKED TO DISCOURAGE PARKING.

3. VEHICLE PULL-UP SPACES IN PASSENGER LOADING ZONES AND ACCESS AISLES SHALL HAVE SURFACE SLOPES NOT STEEPER THAN 50:1. ACCESS AISLES SHALL BE AT THE SAME LEVEL AS THE VEHICLE PULL-UP SPACE THEY SERVE.

4. VERTICAL CLEARANCE OF 114 INCHES (2895mm) MINIMUM SHALL BE PROVIDED AT PASSENGER LOADING ZONES AND ALONG VEHICLE ACCESS ROUTES TO SUCH AREAS FROM SITE ENTRANCES.

5. EACH ACCESSIBLE PASSENGER LOADING ZONE SHALL BE IDENTIFIED BY A SIGN ON A POST. SIGNS SHALL INCLUDE THE INTERNATIONAL SYMBOL OF ACCESSIBILITY.

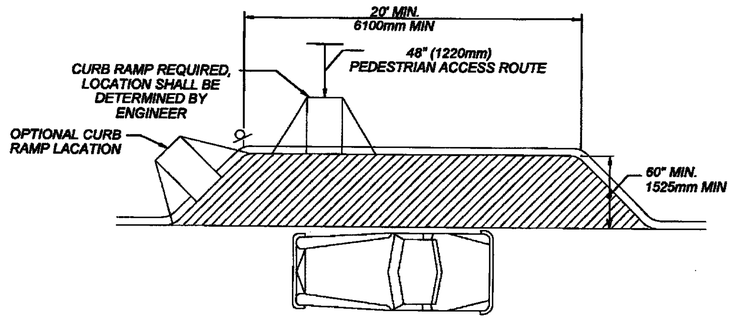

ACCESSIBLE PASSENGER LOADING ZONE
PLAN VIEW

TRANSIT STOP REQUIREMENTS

1. TRANSIT STOPS SHOULD BE LOCATED SO THAT THERE IS A LEVEL AND STABLE SURFACE FOR BOARDING VEHICLES.

2. LOCATING TRANSIT STOPS AT SIGNALIZED INTERSECTIONS INCREASE THE USABILITY FOR PEDESTRIANS WITH DISABILITIES.

3. WHERE SECURITY BOLLARDS ARE INSTALLED AT TRANSIT STOPS, THEY MUST NOT OBSTRUCT THE CLEAR SPACE AT BOARDING AND ALIGHTING AREAS OR REDUCE THE REQUIRED CLEAR WIDTH OF PEDESTRIAN ACCESS ROUTES.

4. TRANSIT STOPS SHALL COMPLY WITH PROWAG SECTION R 308 TRANSIT STOPS AND TRANSIT SHELTERS.

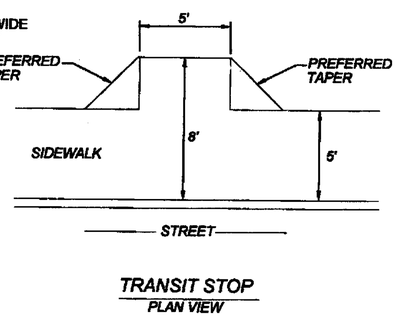

TRANSIT STOP
PLAN VIEW

RAMP REQUIREMENTS:

1. RAMP RUNS SHALL HAVE A RUNNING SLOPE GREATER THAN 1:20 AND NOT STEEPER THAN 1:12. THE EXCEPTION SHALL REMAIN AS SHOWN, INCLUDING THE TABLE FOR EXISTING BUILDINGS AND FACILITIES.

2. RAMP PUNS SHALL HAVE A RUNNING SLOPE NOT STEEPER THAN 12:1. EXCEPTION: RAMPS IN OR ON EXISTING BUILDINGS OR FACILITIES SHALL BE PERMITTED TO HAVE SLOPES STEEPER THAN 12:1 AND SHALL COMPLY WITH THE FOLLOWING TABLE WHERE SUCH SLOPES STEEPER THAN 8:1 SHALL NOT BE PERMITTED.

TABLE FOR EXISTING SITES, BUILDINGS AND FACILITIES

SLOPE	MAXIMUM RISE
STEEPER THAN 10:1 BUT NOT STEEPER THAN 8:1	3 INCHES (75mm)
STEEPER THAN 12:1 BUT NOT STEEPER THAN 10:1	6 INCHES (150mm)

3. CROSS SLOPE OF RAMP RUNS SHALL NOT BE STEEPER THAN 50:1.

4. FLOOR OR GROUND SURFACES OF RAMP RUN SHALL BE STABLE, FIRM, AND SLIP RESISTANT.

5. THE CLEAR WIDTH OF A RAMP RUN SHALL BE 48 INCHES (915mm) MINIMUM MEASURED BETWEEN HANDRAILS.

6. THE RISE FOR ANY RAMP RUN SHALL BE 30 INCHES (760mm) MAXIMUM.

7. RAMPS SHALL HAVE LANDINGS AT THE BOTTOM AND TOP OF EACH RUN. LANDINGS SHALL COMPLY WITH THE FOLLOWING:
   A. LANDINGS SHALL HAVE A SOPE NOT STEEPER THAN 50:1.
   B. CLEAR WIDTH OF LANDINGS SHALL BE AT LEAST AS WIDE AS THE WIDEST RAMP RUN LEADING TO THE LANDING.
   C. LANDING LENGTH SHALL BE 60 INCHES (1525mm) MINIMUM CLEAR.
   D. RAMPS THAT CHANGE DIRECTION AT LANDINGS SHALL HAVE A 60 INCH BY 60 INCH (1525mm) MINIMUM LANDING.
   E. WHERE DOORWAYS ARE ADJACENT TO A RAMP LANDING, MANEUVERING CLEARANCES SHALL COMPLY WITH 2010 AMERICANS WITH DISABILITIES ACT STANDARDS FOR ACCESSIBLE DESIGN (2010 ADA) SECTION 404.

8. RAMPS WITH A RISE GREATER THAN 6 INCHES (150mm) SHALL HAVE HANDRAILS. HANDRAILS SHALL NOT REDUCE THE REQUIRED CLEARANCES OF A RAMP RUN OR LANDINGS.

9. EDGE PROTECTION SHALL BE PROVIDED ON EACH SIDE OF RAMP RUNS AND AT EACH SIDE OF RAMP LANDINGS.

   EXCEPTIONS:
   A. RAMPS NOT REQUIRED TO HAVE HANDRAILS WHERE SIDE FLARES ARE PROVIDED.
   B. SIDES OF RAMP LANDINGS SERVING AN ADJOINING RAMP RUN OR STAIRWAY.
   C. SIDES OF RAMP TURN SPACE HAVING A VERTICAL DROP-OFF OF 1/2 INCH (13mm) MAXIMUM WITHIN 10 INCHES (255mm) HORIZONTALLY OF THE MINIMUM LANDING AREA.

10. EDGE PROTECTION MAY BE PROVIDED BY EXTENDING A FLOOR OR GROUND SURFACE, OF THE RAMP RUN OR LANDING, 12 INCHES (305mm) MINIMUM BEYOND THE INSIDE FACE OF A HANDRAIL OR AN EDGE PROTECTION CURB OR BARRIER SHALL BE PROVIDED THAT PREVENTS THE PASSAGE OF A 4-INCH (100mm) DIAMETER SPHERE BELOW A HEIGHT OF 4 INCHES (100mm).

11. OUTDOOR RAMPS AND APPROACHES TO RAMPS SHALL BE DESIGNED SO THAT WATER WILL NOT ACCUMULATE ON WALKING SURFACES.

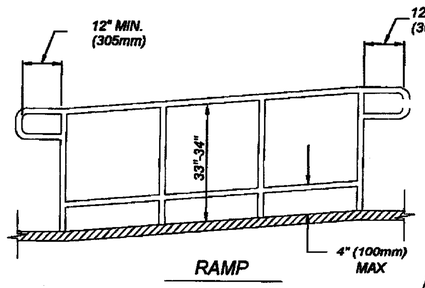

RAMP

NO.	DATE	REV. BY	DESCRIPTION
			REVISIONS (OR CHANGE NOTICES)

NEW MEXICO
DEPARTMENT OF TRANSPORTATION
STANDARD DRAWING

PEDESTRIAN ACCESS DETAILS PARKING AND PASSENGER LOADING ZONES

APPROVED _____ DESIGN ENGINEER — 1-13-15 DATE

608-001-12

608- 12 of 12

file path

DRAWING SCALE = NOT TO SCALE

13-8L

GENERAL NOTES

1. WORKMANSHIP AND MATERIALS SHALL CONFORM TO THE LATEST EDITION OF NMDOT'S **STANDARD SPECIFICATIONS FOR HIGHWAY AND BRIDGE CONSTRUCTION** AND TO THE **SUPPLEMENTAL SPECIFICATIONS AND SPECIAL PROVISIONS.** FABRICATION AND ERECTION OF STEEL COMPONENTS SHALL CONFORM TO THE REQUIREMENT OF SECTION 541 – STEEL STRUCTURES.

2. BARS, PLATES, ROD, AND SHAPES SHALL BE STRUCTURAL STEEL CONFORMING TO THE SPECIFICATIONS OF ASTM DESIGNATION A36, AASHTO DESIGNATION M183.

3. CONTRACTOR SHALL VERIFY, IN THE FIELD, ALL DIMENSIONS, ELEVATIONS, AND DETAILS PERTAINING TO THE SIGN STRUCTURES BEFORE PROCEEDING WITH THE WORK.

4. THE CONTRACTOR MUST CONFIRM COMPATIBILITY BETWEEN SIGN AND STRUCTURE MOUNTING PROVISIONS. ANY REDESIGN OR ALTERATIONS REQUIRED TO ACCOMPLISH THIS COMPATIBILITY IS TO BE CONSIDERED INCIDENTAL. THEREFORE, NO DIRECT PAYMENT WILL BE MADE.

5. PIPE POSTS SHALL BE WELDED OR SEAMLESS STEEL PIPE CONFORMING TO THE SPECIFICATIONS OF ASTM DESIGNATION A53, TYPE E OR S, GRADE B. AT THE OPTION OF THE CONTRACTOR, POSTS MAY BE FABRICATED FROM STRUCTURAL STEEL CONFORMING TO THE SPECIFICATIONS OF ASTM DESIGNATION A36 (AASHTO M183). SPIRAL WELDED PIPE IS, HOWEVER, SPECIFICALLY EXCLUDED.

6. HIGH STRENGTH STEEL BOLTS, NUTS, AND WASHERS (REFEREED TO AS "H.S. BOLTS") SHALL CONFORM TO THE SPECIFICATIONS OF ASTM DESIGNATION A325; AASHTO DESIGNATION M164. DIRECT TENSION INDICATORS SHALL BE USED EXCEPT WHERE NOTED OTHERWISE.

7. ANCHOR BOLTS SHALL BE FABRICATED FROM A36 STEEL; AASHTO DESIGNATION M183. ALL OTHER BOLTS AND NUTS SHALL CONFORM TO THE SPECIFICATIONS OF ASTM DESIGNATION A 307. SUCH BOLTS SHALL BE FURNISHED WITH COMMERCIAL QUALITY WASHERS.

8. SIGN STRUCTURES SHALL BE CONSTRUCTED TRUE TO DIMENSIONS, SHALL BE FREE FROM KINKS, TWISTS, OR BENDS, AND SHALL BE UNIFORM IN APPEARANCE. COMPLETED SECTIONS SHALL BE ASSEMBLED IN THE SHOP AND SHALL BE CHECKED FOR STRAIGHTNESS, ALIGNMENT, AND DIMENSION. ANY VARIATIONS SHALL BE CORRECTED TO THE SATISFACTION OF THE PROJECT MANAGER.

9. THE FABRICATOR SHALL FORM THE TUBULAR SIGN STRUCTURES TO THE RADII SHOWN ON THE PLANS BY HEAT TREATMENT OR FABRICATION METHODS THAT DO NOT CRIMP OR BUCKLE THE INTERIOR RADIUS OF THE PIPE BEND.

10. WELDING OF STEEL SHALL CONFORM TO THE REQUIREMENTS OF SPECIFICATIONS SECTION 541 AND AWS D1.1. ALL AREAS TO BE WELDED SHALL BE GROUND TO BRIGHT METAL. NO BUTT WELD SPLICES WILL BE PERMITTED. ALL CIRCUMFERENTIAL AND STIFFENER WELDS SHALL BE FULL PENETRATION GROOVE WELDS AND SHALL BE NON–DESTRUCTIVELY TESTED USING MAGNETIC PARTICLE EXAMINATION. ALL LONGITUDINAL WELDS WITHIN 6–INCHES OF FULL–PENETRATION CIRCUMFERENTIAL GROOVE WELDS SHALL BE FULL PENETRATION GROOVE WELDS AND SHALL ALSO BE NON–DESTRUCTIVELY INSPECTED. MAXIMUM WELD UNDERCUT SHALL BE 0.01–INCH.

11. ALL FIELD CONNECTION MATING FLANGES, AFTER WELDING TO PIPE MASTS, SHALL BE $\frac{1}{16}$" OR LESS OUT OF PLANE TO INSURE PROPER FIT.

12. HOLES AND PENETRATIONS DRILLED OR CUT INTO TUBULAR SIGN STRUCTURES SHALL HAVE BURRS, SLAG, AND IRREGULARITIES REMOVED BY FILING, GRINDING, OR OTHER APPROVED METHOD TO FORM SMOOTH EDGES AND SURFACES.

13. UNEXPOSED SURFACES NOTED IN THE DRAWINGS AND ALL EXPOSED STEEL SURFACES SHALL RECEIVE PROTECTIVE COATING AS PER SECTION 544 – PROTECTIVE COATING OF NEW STRUCTURAL STEEL – OF THE STANDARD SPECIFICATIONS. ALL MEMBERS SHALL RECEIVE BOTH TOP AND PROTECTIVE COATS. COLOR SAMPLES ON 1–FT X 1–FT PANELS SHALL BE SUBMITTED TO THE PROJECT MANAGER FOR APPROVAL. THE APPROVED PANELS SHALL BE USED AS A CONTROL TO MATCH THE AREAS TO BE PAINTED.

14. COLOR CHOICE SHALL BE APPROVED BY THE PROJECT MANAGER AND MATERIALS FOR PROTECTIVE COATINGS SHALL NOT BE PURCHASED UNTIL WRITTEN APPROVAL IS RECEIVED FROM THE PROJECT MANAGER.

15. THE PROTECTIVE COATING FINAL FINISH SHALL BE SHELTERED FROM HARM DURING SHOP STORAGE, HANDLING, SHIPPING, SITE STORAGE, AND CONSTRUCTION. DAMAGE TO THE FINISH SHALL BE REPAIRED TO THE SATISFACTION OF THE PROJECT MANAGER.

16. TO PREVENT DAMAGE TO THE FINISHED PAINTED SURFACES, SECURE THE STRUCTURE DURING SHIPPING AND LIFTING: CLIPS, EYES, OR REMOVABLE BRACKETS SHALL BE AFFIXED TO ALL POSTS AND MASTS ARMS AS NECESSARY. THESE TEMPORARY BRACKETS SHALL BE REMOVED AFTER ERECTION. DETAILS OF SUCH DEVICES SHALL BE SHOWN ON THE SHOP DRAWINGS.

17. SIGN PANELS MOUNTED ON SUPPORT STRUCTURES SHALL NOT BE MOUNTED UNTIL ALL STRUCTURAL ASSEMBLY IS COMPLETE, STRUCTURE IS MOUNTED ON FOUNDATIONS, AND BOLTS ARE TIGHTENED.

18. IN ORDER TO FIRMLY SEAT THE FLANGE PLATES, MAST ARMS SHALL BE TEMPORARILY SUPPORTED TO TAKE ALL LOADS OFF THE FIELD SPLICES WHILE BOLTS ARE BEING TIGHTENED.

19. OVERHEAD SIGN STRUCTURES ARE NOT BREAKAWAY DEVICES AND MUST BE PROTECTED BY GUARDRAIL, BARRIERS, ATTENUATORS, OR A COMBINATION OF PROPERLY PLACED DEVICES. PROPER PLACEMENT OF DEVICES MUST PROTECT SIGN STRUCTURE FROM IMPACT UNDER DEFLECTION AND OVERHEAD CLEARANCE.

20. DRILLED SHAFT FOUNDATION DESIGN IS BASED ON FRICTION NONCOHESIVE UNSATURATED SOIL WITH A DENSITY OF 100 LB/CUBIC FT AND AN ANGLE OF INTERNAL FRICTION OF 30 DEGREES. GRANULAR SOILS WITH LOWER DENSITIES OR LOWER ANGLES OF INTERNAL FRICTION ARE LOOSE, ROUNDED FINE–GRAINED SOILS AND NOT SUITABLE FOR THIS FOUNDATION DESIGN. HIGH WATER TABLE THAT SATURATES THE SOIL IS ALSO NOT SUITABLE FOR THIS DESIGN. PLASTIC COHESIVE SOILS WITH LOW COHESION AND LITTLE FRICTION INTERACTION ARE ALSO UNSUITABLE. A PROJECT GEOTECHNICAL ENGINEER FAMILIAR WITH THE SITE SHOULD BE CONSULTED FOR LIKELY SUITABILITY OR FOR SOIL INVESTIGATION REQUIREMENTS.

21. IN SOME CASES, BURIED ROCK OUTCROPPINGS OR NEAR–SURFACE BEDROCK MAY INTERFERE WITH DRILLED SHAFT EXCAVATIONS. IF THERE IS SOME LIKELIHOOD OF THIS, A SOILS INVESTIGATION OR SITE SPECIFIC FOUNDATION DESIGN SHOULD BE UNDERTAKEN.

22. WHEN SUPPLIED, GEOTECHNICAL DRILL–HOLE INFORMATION IS FOR INFORMATIONAL PURPOSES ONLY. THE DEPARTMENT OF TRANSPORTATION IS NOT RESPONSIBLE FOR ANY INTERPRETATION OR ASSUMPTION MADE BY THE CONTRACTOR BASED ON DRILL–HOLE INFORMATION.

23. REINFORCING BARS SHALL CONFORM TO THE REQUIREMENTS OF AASHTO M31 AND THE REVISIONS TO AASHTO M31 CONTAINED IN 540.21 AND TABLE 540–A OF THE STANDARD SPECIFICATIONS. UNLESS OTHERWISE SPECIFIED ON THE DRAWINGS, USE GRADE 60 REINFORCING BARS. DIMENSIONS SHOWN REFER TO CENTERLINES OF BARS.

24. ALL CONCRETE FOR SIGN SUPPORT DRILLED SHAFT FOUNDATIONS SHALL BE CLASS "G". DESIGN BASED ON ULTIMATE 28 DAY COMPRESSIVE STRENGTH OF 3000 PSI. CHAMFER ALL EXPOSED EDGES ¾" UNLESS NOTED OTHERWISE. LIQUID MEMBRANE–FORMING COMPOUND USED IN MEMBRANE CURING OF CONCRETE SHALL CONFORM TO SUBSECTION 510.23 OF THE STANDARD SPECIFICATIONS.

25. CARE MUST BE TAKEN TO INSURE THAT ANCHOR BOLT ALIGNMENT WHEN CAST INTO THE DRILLED SHAFT IS CORRECTLY PLACED SO THAT THE BASE BOLT PATTERN IS PROPERLY ALIGNED WITH SIGN STRUCTURE.

26. FOUNDATION MATERIAL MUST NOT BE DISTURBED DURING CONSTRUCTION OPERATIONS. ANY FOUNDATION MATERIAL WHICH HAS BEEN CRACKED, LOOSENED OR MOVED BY OPERATIONS OF THE CONTRACTOR MUST BE REPLACED WITH CLASS "G" CONCRETE TO THE SATISFACTION OF THE PROJECT MANAGER AT NO ADDITIONAL COST TO THE STATE. ALL DRILLED HOLES SHALL BE INSPECTED BY THE PROJECT MANAGER BEFORE ANY CONCRETE IS PLACED.

27. WHEN APPLICABLE, STRUCTURES SHALL BE GROUNDED IN ACCORDANCE WITH APPLICABLE ELECTRICAL CODES.

28. ALL ITEMS FIXED OR ATTACHED TO OVERHEAD SIGN SUPPORT STRUCTURE MUST NOT EXTEND FURTHER THAN 13'–6" ABOVE THE CENTERLINE OF HORIZONTAL MAST ARM. THIS INCLUDES; BUT IS NOT LIMITED TO, SIGN PANELS, SOLAR COLLECTORS, ARMS, BRACES, ETC.

DRAWINGS

1/14 – GENERAL NOTES

2/14 – LAYOUT AND PIPE SELECTION TWO POST TYPE

3/14 – LAYOUT AND PIPE SELECTION SINGLE POST TYPE

4/14 – FOUNDATION DETAILS

5/14 – GENERAL DETAILS

6/14 – PANEL SIGN SUPPORT WELDED

7/14 – ELECTRICAL DETAILS

8/14 – ELECTRICAL DETAILS CONTINUED

9/14 – VARIABLE/DYNAMIC MESSAGE SIGN MOUNTS

10/14 – RETROFIT SIGN PANELS

11/14 – WALKWAY AND SAFETY RAILING OVERVIEW

12/14 – WALKWAY AND SAFETY RAILING WALKWAY DETAILS

13/14 – WALKWAY AND SAFETY RAILING SAFETY RAILING DETAILS

14/14 – WALKWAY AND SAFETY RAILING BRACKET MOUNTING DETAILS

SERIAL DRAWINGS REQUIRED

EXTRUDED PANEL SIGN FRAME DETAILS – 701–04–1/1

EXTRUDED PANEL ASSEMBLY DETAILS – 701–05–1/2 & 2/2

DESIGN DATA

DESIGN IS IN ACCORDANCE WITH AASHTO STANDARD SPECIFICATIONS FOR STRUCTURAL SUPPORTS FOR HIGHWAY SIGNS, LUMINARIES AND TRAFFIC SIGNALS, 4TH EDITION, 2001.

DESIGN STRESSES:
STEEL REINFORCEMENT: Fy = 60,000 PSI
CONCRETE: f'c = 3,000 PSI
STRUCTURAL PIPE STEEL: Fy = 35,000 PSI
ANCHOR BOLT STEEL: Fy = 36,000 PSI

ASSUMED SOIL DATA:
GRANULAR SOIL, DENSITY = 100 PCF
ANGLE OF INTERNAL FRICTION = 30 DEGREES

DEAD LOAD FROM SIGN PANELS:
FROM STATIC SIGN PANELS: 111 LB/FT
ENTIRE LENGTH OF HORIZONTAL MAST,
FROM SIX FEET BEYOND EACH FIELD JOINT

WIND LOAD:
90 MPH, 3–SECOND GUST @ 32.8 FT
FIXED SIGN PANEL: 18.5–FOOT HEIGHT

DYNAMIC/VARIABLE MESSAGE SIGN
10–FT HIGH PANEL WITH DEAD WEIGHT OF 210 LB/FT
LENGTH OF HORIZONTAL MAST ARM FROM FIELD SPLICE TO MAST END (SIGN NOT TO EXTEND PAST END FIELD SPLICE)
50" SIGN CABINET THICKNESS

ICE LOAD:
THREE PSF ON STRUCTURE SURFACE
ADDITIONAL 111 PLF ON HORIZONTAL MAST FROM SIGN PANELS

LOCATION DRAWINGS

REFER TO OVERHEAD SIGN STRUCTURE LOCATION DRAWINGS FOR THE FOLLOWING INFORMATION:

1. SIGN STRUCTURE TYPE AND LOCATION.
2. LENGTH OF STRUCTURE SPAN.
3. PANEL SIZE AND LOCATION ON STRUCTURE.
4. POST HEIGHT TO BOTTOM OF SIGN PANEL.
5. BASE PLATE ELEVATION.
6. ELECTICAL ACCESS, ELECTRIC DETAILS, OR PHOTOELECTRIC CELL LOCATION. IF REQUIRED.
7. REQUIREMENTS FOR WALKWAY, SHOW LOCATION ON STRUCTURE. IF REQUIRED.
8. REQUIREMENTS FOR PAINT COLOR.

NO.	DATE	REV. BY	DESCRIPTION

REVISIONS (OR CHANGE NOTICES)

NEW MEXICO
DEPARTMENT OF TRANSPORTATION
STANDARD DRAWING

OVERHEAD SIGNS TUBULAR
GENERAL NOTES

APPROVED _____ DESIGN ENGINEER 5-30-06 DATE

DESIGNED BY SRM DRAWN BY SGL CHECKED BY TLB

701–01–1/14 1 OF 14

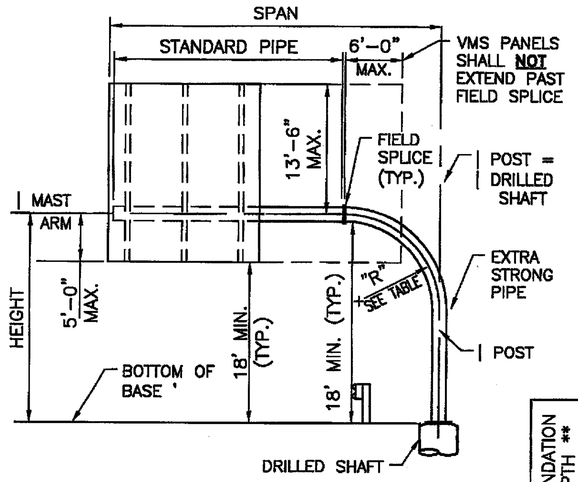

VERTICAL POST CANTILEVER

(SEE LOCATION DRAWING)

VERTICAL CANTILEVER SINGLE-POST OVERHEAD SIGN SUPPORTS

HEIGHT (NEAREST FT.)	SPAN (EQUAL TO OR LESS THAN)							
22'	11'	13'	16'	19'	21'	25'	33'	39'
23'	10'	12'	16'	19'	21'	25'	33'	39'
24'	10'	12'	16'	19'	21'	25'	33'	39'
25'	9'	11'	15'	19'	21'	25'	33'	39'
26'	9'	11'	14'	19'	21'	25'	33'	39'
27'	9'	10'	14'	19'	21'	25'	33'	39'
28'	9'	10'	13'	19'	21'	25'	33'	39'
29'	8'	10'	13'	19'	21'	25'	33'	39'
30'	8'	10'	12'	18'	21'	25'	33'	39'
R	8'	8'	8'	10'	10'	12'	16'	18'
PIPE SIZE	12"	14"	16"	18"	20"	24"	30"	36"
FOUNDATION DEPTH ** LEVEL	10'	12'	13'	16'	16'	19'	26'	29'
TO 10:1 SLOPE	11'	13'	14'	17'	17'	20'	28'	31'
TO 6:1 SLOPE	12'	14'	15'	19'	19'	22'	30'	34'
TO 4:1 SLOPE	12'	14'	16'	19'	19'	23'	31'	34'
TO 3:1 SLOPE	12'	15'	16'	19'	19'	23'	31'	35'
TO 2:1 SLOPE	13'	15'	16'	20'	20'	24'	32'	36'

** SEE NOTE 6

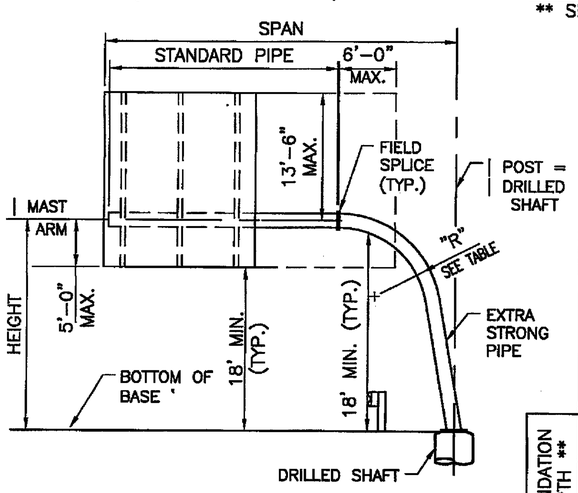

SLANTED POST CANTILEVER

(SEE LOCATION DRAWING)

SLANTED CANTILEVER SINGLE-POST OVERHEAD SIGN SUPPORTS

HEIGHT (NEAREST FT.)	SPAN (EQUAL TO OR LESS THAN)							
22'	13'	15'	17'	19'	21'	26'	33'	40'
23'	13'	15'	17'	19'	21'	26'	33'	40'
24'	13'	15'	17'	19'	21'	26'	33'	40'
25'	13'	14'	17'	19'	21'	26'	33'	40'
26'	13'	14'	17'	19'	21'	26'	33'	40'
27'	13'	14'	17'	19'	22'	26'	33'	40'
28'	–	14'	17'	20'	22'	26'	33'	40'
29'	–	14'	17'	20'	22'	26'	34'	40'
30'	–	13'	16'	20'	22'	26'	34'	40'
R	8'	8'	8'	10'	10'	12'	16'	18'
PIPE SIZE	12"	14"	16"	18"	20"	24"	30"	36"
FOUNDATION DEPTH ** LEVEL	11'	12'	14'	17'	17'	19'	26'	29'
TO 10:1 SLOPE	12'	13'	15'	18'	18'	20'	28'	31'
TO 6:1 SLOPE	13'	14'	16'	20'	20'	22'	30'	34'
TO 4:1 SLOPE	13'	14'	17'	20'	20'	23'	31'	34'
TO 3:1 SLOPE	14'	15'	17'	21'	21'	23'	31'	35'
TO 2:1 SLOPE	14'	15'	18'	21'	21'	24'	32'	36'

** SEE NOTE 6

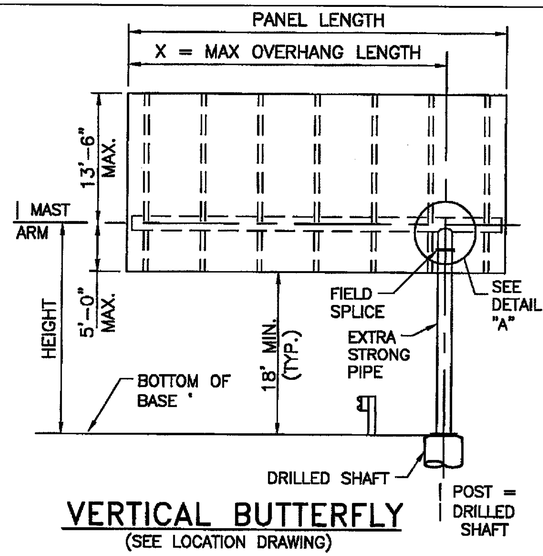

VERTICAL BUTTERFLY

(SEE LOCATION DRAWING)

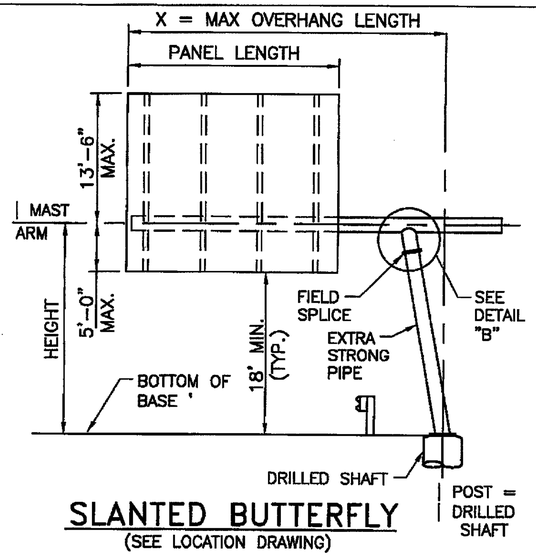

SLANTED BUTTERFLY

(SEE LOCATION DRAWING)

VERTICAL & SLANTED BUTTERFLY SINGLE-POST OVERHEAD SIGN SUPPORTS

HEIGHT (NEAREST FT.)	MAXIMUM PANEL LENGTH (EQUAL TO OR LESS THAN)							
22'	8'	11'	15'	20'	24'	35'	55'	76'
23'	7'	10'	14'	19'	23'	33'	53'	76'
24'	7'	10'	14'	18'	23'	32'	51'	74'
25'	7'	10'	13'	18'	22'	31'	49'	71'
26'	6'	9'	13'	17'	21'	30'	47'	69'
27'	6'	9'	12'	16'	20'	29'	46'	67'
28'	6'	8'	12'	16'	20'	28'	44'	64'
29'	6'	8'	11'	15'	19'	27'	43'	62'
30'	5'	8'	11'	14'	18'	27'	41'	60'
MAXIMUM OVERHANG (X)	12'	14'	16'	18'	20'	25'	31'	38'
PIPE SIZE	12"	14"	16"	18"	20"	24"	30"	36"
FOUNDATION DEPTH ** LEVEL	10'	11'	12'	13'	13'	15'	18'	20'
TO 10:1 SLOPE	11'	12'	13'	14'	14'	16'	19'	21'
TO 6:1 SLOPE	12'	13'	14'	15'	15'	18'	21'	23'
TO 4:1 SLOPE	12'	13'	14'	16'	16'	18'	21'	24'
TO 3:1 SLOPE	12'	14'	15'	16'	16'	18'	22'	24'
TO 2:1 SLOPE	13'	14'	15'	16'	16'	19'	22'	25'

** SEE NOTE 6

NOTES

1. THE MAXIMUM SIGN PANEL OVERLAP ONTO ELBOW SHALL NOT EXCEED 6'-0" FROM THE FIELD SPLICE.
2. FOR VARIABLE MESSAGE/DYNAMIC MESSAGE SIGNS, THERE SHALL BE NO OVERLAP PAST THE END FIELD SPLICE.
3. ALL POST BETWEEN BASE PLATE AND FIELD SPLICE ARE EXTRA STRONG PIPE. MAST ARMS (HORIZONTAL PIPE) ARE STANDARD PIPE.
4. DURING SIGN ERECTION THE POST SHALL BE RAKED AS NECESSARY WITH THE USE OF THE LEVELING NUTS TO MAKE THE SIGN PANEL LEVEL.
5. AT FINAL POSITION OF POST, ALL TOP AND BOTTOM ANCHOR BOLT NUTS SHALL BE WRENCH TIGHTENED AGAINST BASE PLATES.
6. DRILL SHAFT FOUNDATION DEPTH MUST BE INCREASED IF INSTALLED ON OR NEAR (WITHIN ½ DEPTH OF FOUNDATION) A GROUND SLOPE. IF GROUND SLOPES MINIMALLY DOWN AND THEN BACK UP WITHIN ½ FOUNDATION DEPTH, AS IN DRAINAGE DITCH, TREAT AS IF LEVEL.

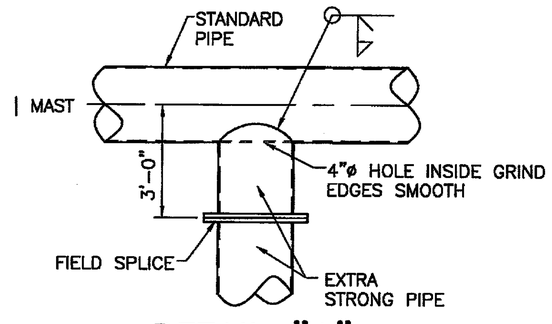

DETAIL "A"

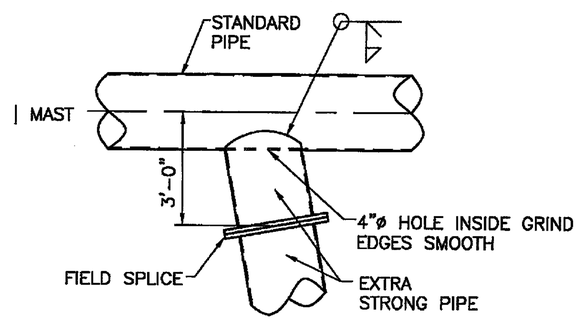

DETAIL "B"

PIPE SELECTION PROCEDURE

1. SELECT OVERHEAD SIGN TYPE (E.G., SLANTED TWO POST TYPE, BUTTERFLY).
2. ROUND HEIGHT TO NEAREST FOOT, ENTER THE LEFT SIDE OF THE TABLE AT THAT HEIGHT.
3. MOVE RIGHT UNTIL THE NUMBER IN THE COLUMN EXCEEDS THE SUPPORT SPAN.
4. THEN READ DIRECTLY DOWN TO SELECT PIPE DIAMETER.

EXAMPLE

GIVENS: VERTICAL CANTILEVER SINGLE-POST TYPE, HEIGHT = 25'-8" AND SPAN = 32' GROUND SLOPE = 6:1

SOLUTION: ENTER TABLE FOR VERTICAL CANTILEVER SINGLE-POST TYPE AND SELECT "HEIGHT (NEAREST FT.)" = 26'. MOVE TO THE RIGHT AND SELECT "SPAN (EQUAL TO OR LESS THAN)" = 33'. MOVE DOWN AND SELECT "PIPE SIZE" = 30", "R" = 16' AND "FOUNDATION DEPTH" = 30'.

NO.	DATE	REV. BY	DESCRIPTION

REVISIONS (OR CHANGE NOTICES)

NEW MEXICO DEPARTMENT OF TRANSPORTATION STANDARD DRAWING

OVERHEAD SIGNS TUBULAR LAYOUT AND PIPE SELECTION SINGLE POST TYPE

APPROVED _____ DESIGN ENGINEER 5-30-06 DATE

DESIGNED BY SRM DRAWN BY SGL CHECKED BY TLB

701-01-3/14 3 OF 14

13-10

BEFORE FINAL ANCHOR BOLT ASSEMBLY APPLY THREAD LOCKING ADHESIVE. TORQUE TO SPECIFICATIONS. SEE NOTES 7 & 8.

SLOPE TOP OF CONCRETE ¼"/FT. FROM CENTER TO OUTER EDGE.

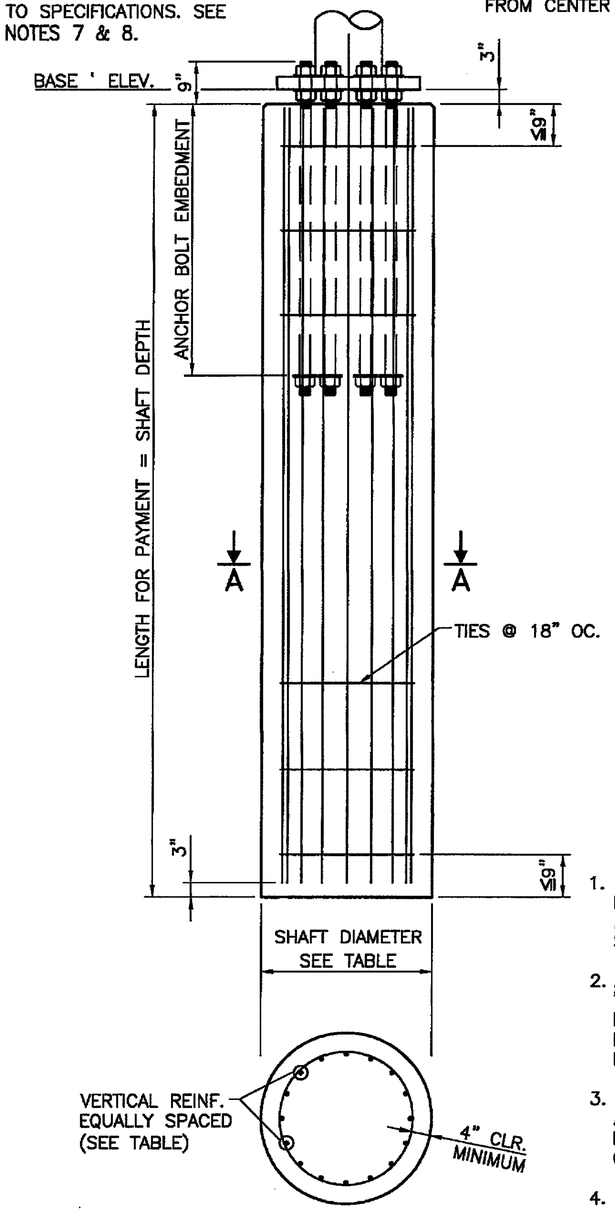

SECTION A–A

DRILLED SHAFT CONCRETE

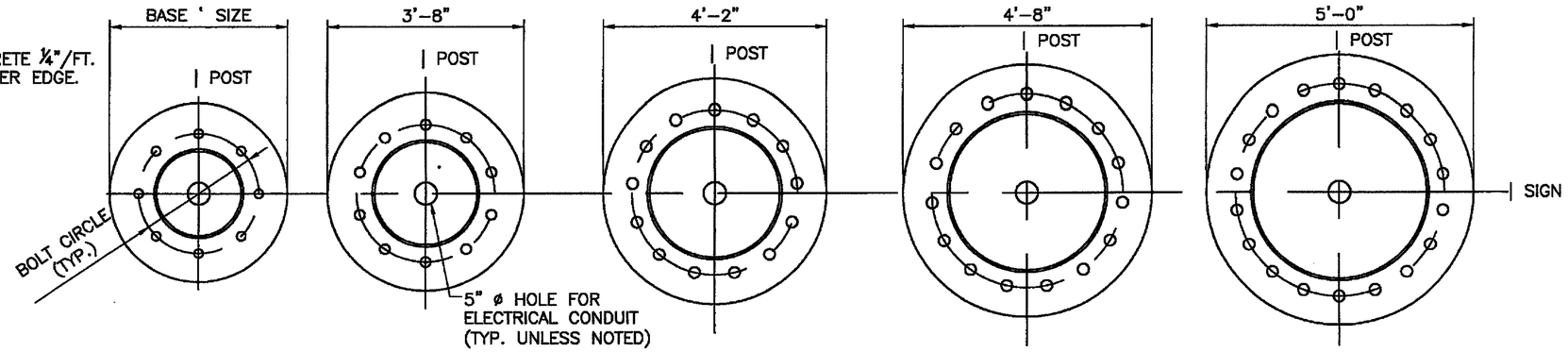

8 BOLTS (12" THRU 20")

10 BOLTS (24" ONLY)

13 BOLTS (30" ONLY)

15 BOLTS (36" ONLY)

18 BOLTS (40" ONLY)

BASE PLATE DETAILS

NOTE: HOLES FOR ANCHOR BOLTS SHALL EQUAL BOLT DIAMETER +¼".

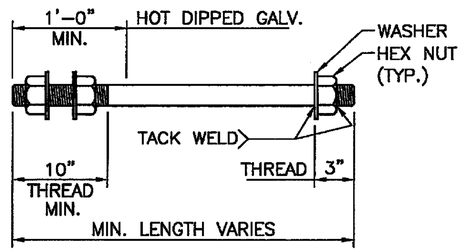

ANCHOR BOLT DETAIL

(SEE TABLE FOR QTY., DIA. & MIN EMBED)

PIPE SIZE	12"	14"	16"	18"	20"	24"	30"	36"	40"
ANCHORAGE									
BASE ' DIAMETER	27.5"	30"	34.5"	36.5"	40"	44"	50"	56"	60"
BASE ' THICKNESS	2¼"	2½"	2¾"	2¾"	2¾"	2¾"	2¾"	2¾"	2½"
BOLT CIRCLE DIA.	17"	19.5"	22.5"	24.5"	27"	31"	37"	43"	47"
NO. OF ANCHOR BOLTS	8	8	8	8	8	10	13	15	18
ANCHOR BOLT ø	1¾"	2"	2¼"	2¼"	2½"	2½"	2½"	2½"	2½"
MIN. ANCHOR BOLT EMBED.	71"	71"	71"	71"	71"	71"	79"	86"	86"
FOUNDATION									
SHAFT DIAMETER	36"	36"	42"	42"	48"	54"	54"	60"	66"
VERTICAL REBAR SIZE	#9	#9	#9	#9	#9	#9	#10	#11	#11
NO. OF VERTICAL REBAR	14	16	19	22	24	29	27	25	26
TIES	#4	#4	#4	#4	#4	#4	#5	#5	#5

NOTES

1. FOUNDATIONS SHALL CONFORM TO SECTION 502 OF THE LATEST EDITION OF THE NEW MEXICO STANDARD SPECIFICATIONS FOR HIGHWAY AND BRIDGE CONSTRUCTION AND TO THE LATEST SUPPLEMENTAL SPECIFICATIONS.
2. ALL CONCRETE FOR DRILLED SHAFT FOUNDATIONS SHALL BE CLASS "G", AND SHALL BE PLACED IN DRILLED HOLES AGAINST UNDISTURBED MATERIAL, EXCEPT THAT THE UPPER 3 FEET OF THE SHAFT SHALL BE FORMED. FOUNDATION SHALL BE COMPLETED AT LEAST 7 DAYS BEFORE ERECTING SIGN STRUCTURES ON THE FOUNDATION.
3. PROVIDE BOLT TEMPLATE FOR CAST–IN–PLACE INSTALLATION OF ANCHOR BOLTS. TAKE PROPER CARE TO ALIGN FOUNDATION BOLT PATTERN WITH THE BASE PLATE PATTERN THAT RESULTS IN CORRECT CENTERLINE ALIGNMENT OF SUPPORT STRUCTURE WITH BOLT PATTERN.
4. PRIOR TO ERECTION OF POSTS, EXCAVATIONS CREATED FOR SHAFT CONSTRUCTION SHALL BE BACKFILLED WITH MATERIAL EQUIVALENT TO THE SURROUNDING SOIL AND SHALL BE COMPACTED TO 95% OF MAXIMUM DENSITY AS DETERMINED BY AASHTO T–99, METHOD "C". BACKFILL SHALL BE CONSIDERED INCIDENTAL TO CONSTRUCTION. THEREFORE, NO DIRECT PAYMENT WILL BE MADE.
5. FURNISHING AND PLACING OF ANCHOR BOLTS SHALL BE CONSIDERED INCIDENTAL TO CONSTRUCTION AND NO DIRECT PAYMENT WILL BE MADE.
6. PRIOR TO TIGHTENING ANCHOR BOLTS, LEVELING NUTS SHALL BE ADJUSTED SO THAT THEY BEAR UNIFORMLY AGAINST THE BASE PLATES.
7. TIGHTEN THE ANCHOR BOLT NUTS TWO OR MORE TIMES IN CROSS PATTERNS (TIGHTENING NUTS DIAMETRICALLY OPPOSITE) TO ENSURE EVEN TIGHTENING. THE FOLLOWING MINIMUM TORQUES SHALL BE APPLIED DURING THE FINAL ROUNDS OF TIGHTENING.

   2½"ø: 1400 FT.–LB.
   2¼"ø: 1000 FT.–LB.
   2" ø:700 FT.–LB.
   1¾"ø: 500 FT.–LB.
8. ASSEMBLE ANCHOR BOLT NUTS USING THREADLOCKER ADHESIVE. FOLLOW MANUFACTURER'S INSTRUCTIONS FOR CLEANING, PRIMING, AND ADHESIVE INSTALLATION. USE LOCKTITE PRO–LOCK HIGH STRENGTH THREADLOCKER, PERMA–LOK HEAVY DUTY BOLT AND STUD LOCKING ANAEROBIC ADHESIVE/SEALANT, HERNON NUTS N' BOLTS ANAEROBIC ADHESIVE, SAF–T–LOK T77 HIGH STRENGTH ANAEROBIC ADHESIVE, PACER ANL–77 ANAEROBIC ADHESIVE, OR APPROVED EQUAL. USE CLEANER, PRIMER AND ADHESIVE FROM THE SAME MANUFACTURER.
9. AT FINAL TIGHTENED ASSEMBLY, THE THREADED BOLT END MUST EXTEND PAST THE EDGE OF THE NUT FAR ENOUGH TO FULLY ENGAGE ALL THREADS IN THE NUT (FULL NUT).
10. DO NOT INSTALL GROUT BETWEEN TOP OF FOUNDATION AND SIGN SUPPORT BASE PLATE.

NO.	DATE	REV. BY	DESCRIPTION
01	6/8/06	SRM	INCREASED SIZE OF TIES

REVISIONS (OR CHANGE NOTICES)

NEW MEXICO DEPARTMENT OF TRANSPORTATION STANDARD DRAWING

OVERHEAD SIGNS TUBULAR FOUNDATION DETAILS

APPROVED _____ DESIGN ENGINEER June 8, 06 DATE

DESIGNED BY SRM DRAWN BY SGL CHECKED BY TLB

701–01–4/14

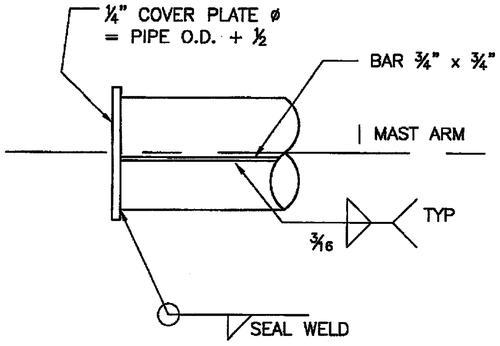

MAST ARM END DETAIL

(FOR "SINGLE POST TYPE" ONLY)

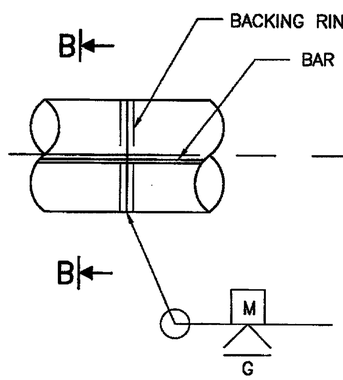

SHOP SPLICE

(FOR HORIZONTAL MAST ARM ONLY)

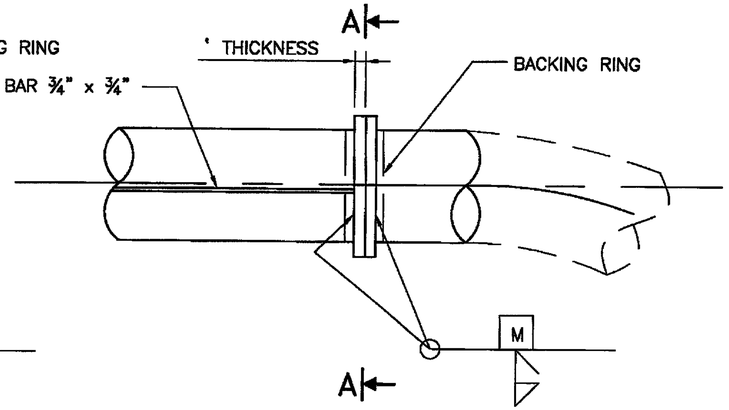

FIELD SPLICE

(FOR HORIZONTAL MAST ARM ONLY)

FIELD SPLICE

PIPE DIAMETER	MIN PLATE THICKNESS	NO. OF BOLTS	BOLT SIZE	BOLT CIRCLE DIA.	PLATE DIA.
12"	1⅝"	16	⅞"	15.5"	18.5"
14"	1¾"	16	1"	17.0"	20.0"
16"	1¾"	16	1"	19.0"	22.0"
18"	1⅞"	16	1⅛"	21.5"	25.0"
20"	1⅞"	16	1⅛"	23.5"	27.0"
24"	1⅞"	16	1¼"	28.0"	32.0"
30"	1⅞"	16	1⅜"	34.0"	38.0"
36"	1⅞"	18	1⅜"	40.0"	44.0"
40"	1⅞"	20	1⅜"	44.0"	48.0"

NOTE: DESIGN BASED ON CAPACITY OF STANDARD PIPE.

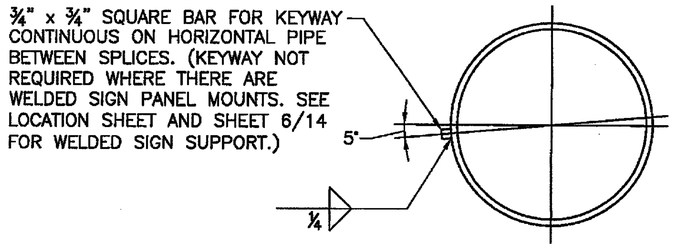

SECTION B–B

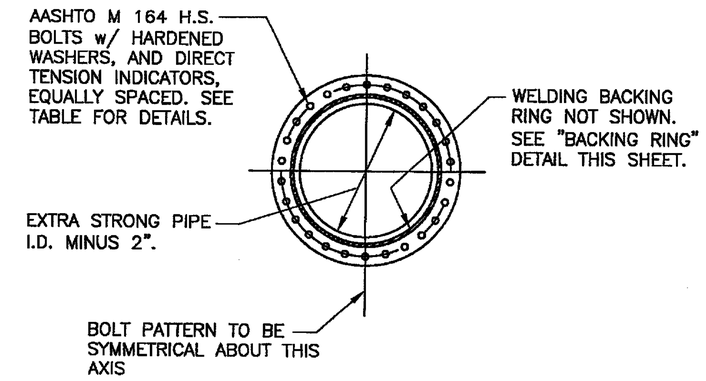

SECTION A–A

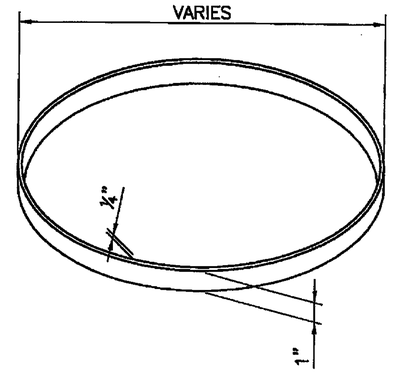

BACKING RING

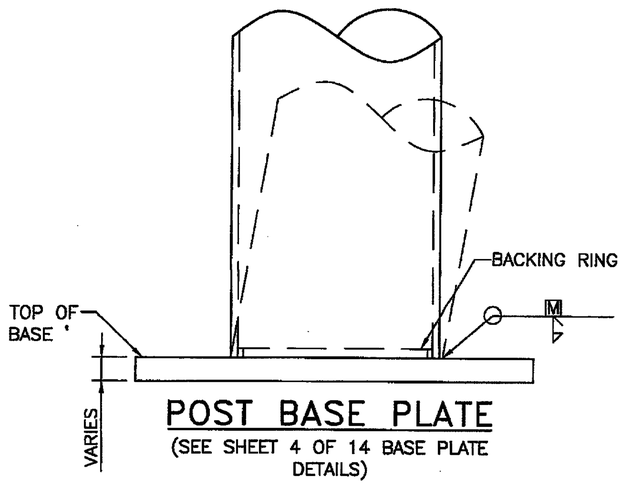

POST BASE PLATE

(SEE SHEET 4 OF 14 BASE PLATE DETAILS)

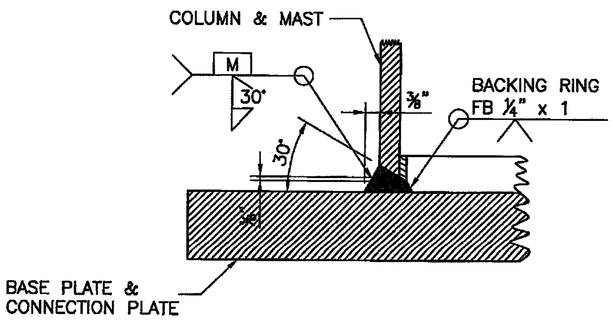

NOTE: INCORPORATE TACK WELD IN FINAL WELD.

WELD DETAIL

NO.	DATE	REV. BY	DESCRIPTION
			REVISIONS (OR CHANGE NOTICES)

NEW MEXICO DEPARTMENT OF TRANSPORTATION STANDARD DRAWING

OVERHEAD SIGNS TUBULAR GENERAL DETAILS

APPROVED _____ DESIGN ENGINEER 5-30-96 DATE

DESIGNED BY SRM DRAWN BY SGL CHECKED BY TLB

701-01-5/14 5 OF 14

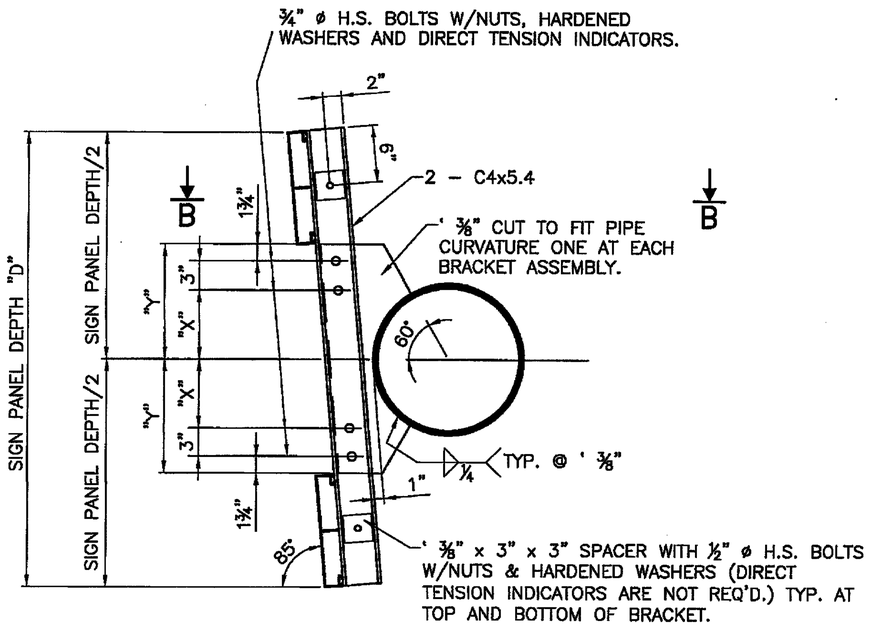

SINGLE PANEL

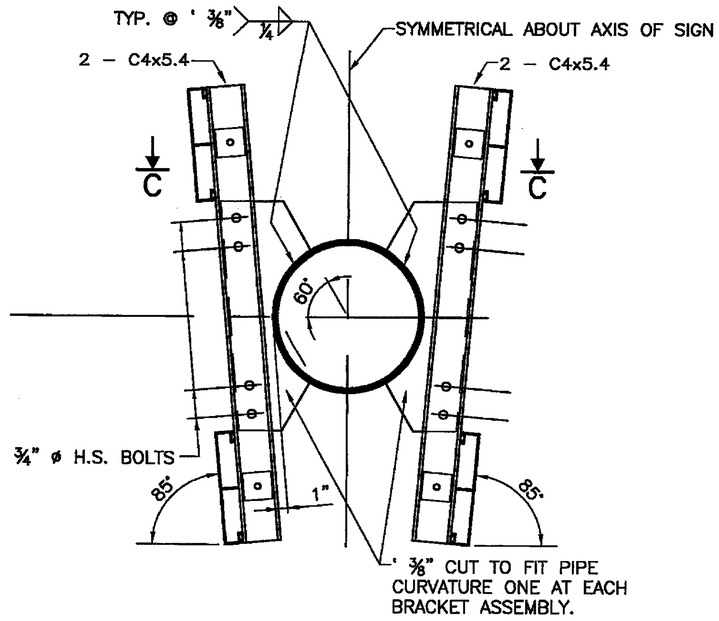

NOTE: FOR DETAILS NOT SHOWN OR NOTED SEE "SINGLE PANEL"

DOUBLE PANEL

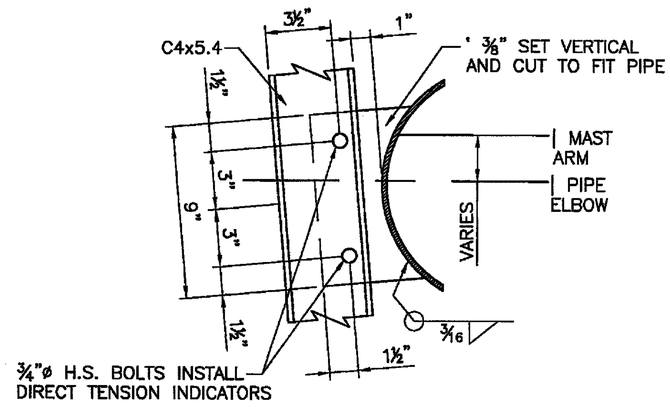

MOUNTING AT ELBOW

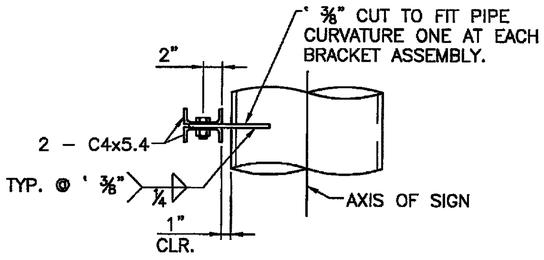

VIEW B–B

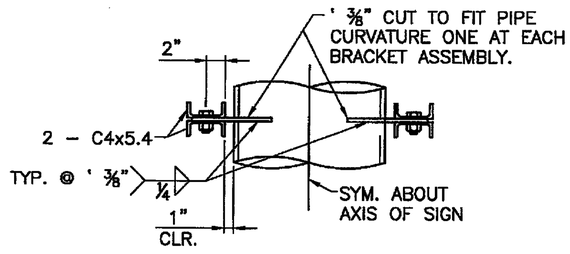

VIEW C–C

PANEL VALUES		
PIPE DIA.	X	Y
12"	4.25"	9.0"
14"	5.75"	10.5"
16"	7.25"	12.0"
18"	8.75"	13.5"
20"	10.25"	15.0"
24"	13.25"	18.0"
30"	17.75"	22.5"
36"	22.25"	27.0"
40"	25.25"	30.0"

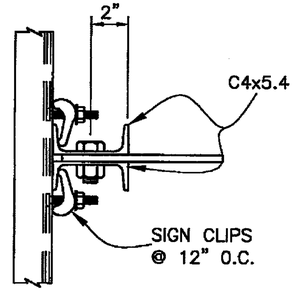

SIGN CLIP MOUNTING HARDWARE

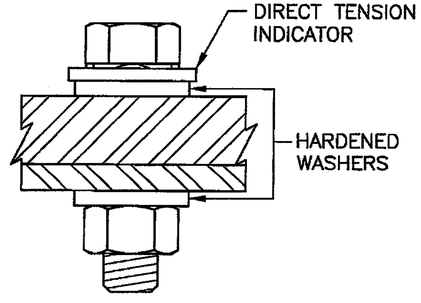

DIRECT TENSION INDICATOR

NO.	DATE	REV. BY	DESCRIPTION

REVISIONS (OR CHANGE NOTICES)

NEW MEXICO DEPARTMENT OF TRANSPORTATION STANDARD DRAWING

OVERHEAD SIGNS TUBULAR PANEL SIGN SUPPORT WELDED

APPROVED _____ DESIGN ENGINEER 5-30-06 DATE

DESIGNED BY SRM DRAWN BY SGL CHECKED BY TLB

701-01-6/14 6 OF 14

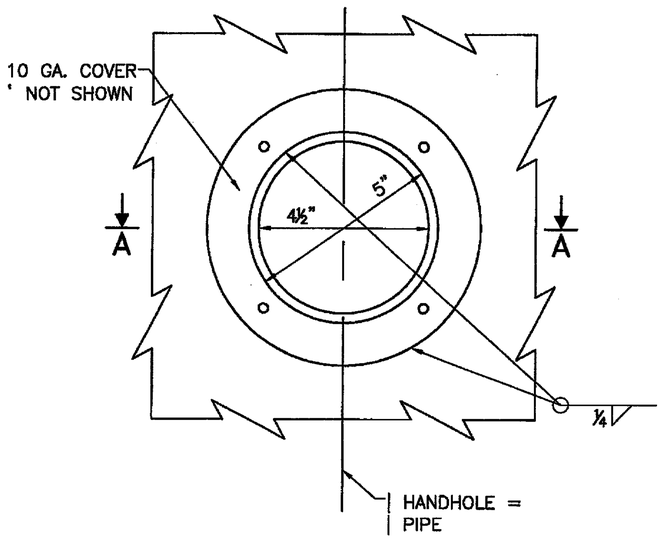

HANDHOLE & COVER DETAIL

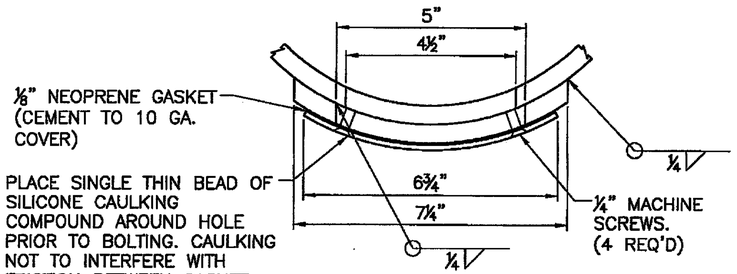

SECTION A–A

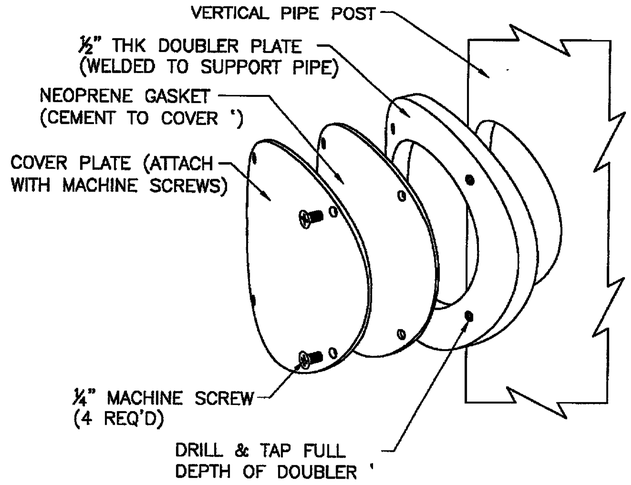

EXPLODED HANDHOLE DETAIL

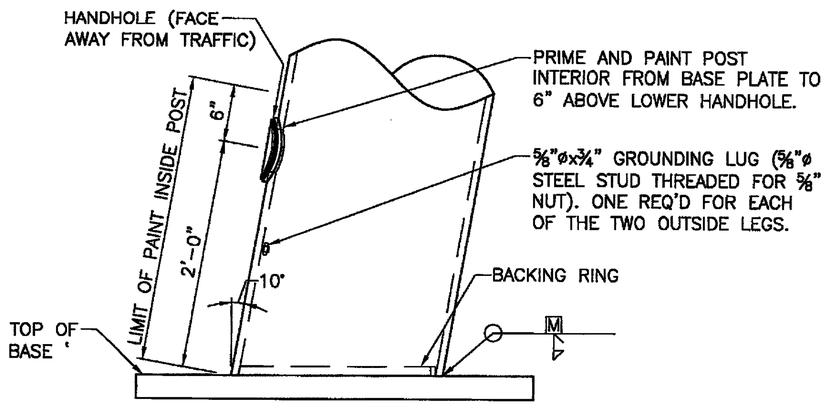

POST BASE PLATE

(SEE SHEET 4/14 FOUNDATION DETAILS)

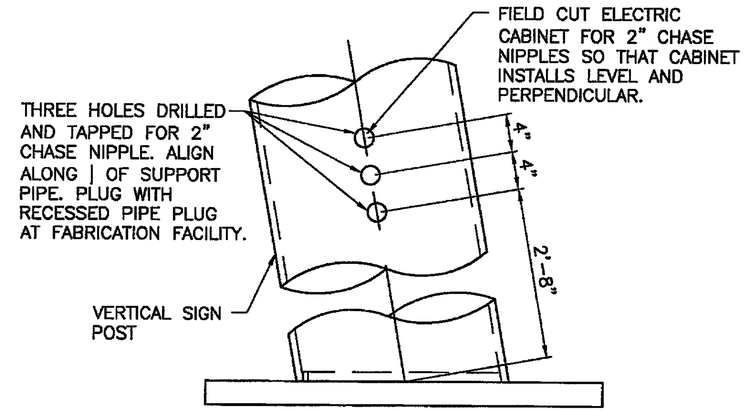

CHASE NIPPLE PLACEMENT

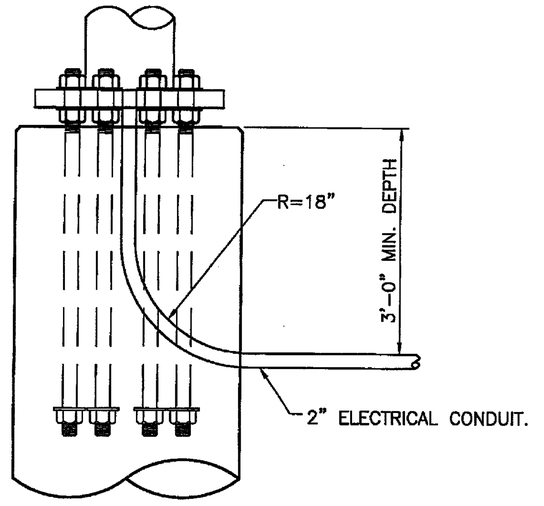

UNDER GROUND ELECTRICAL CONDUIT

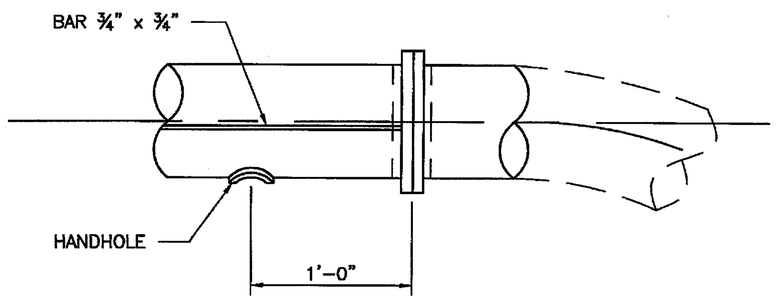

HORIZONTAL HANDHOLE LOCATION

NOTE:
ITEMS ON THIS SHEET ARE FOR ELECTRICAL SERVICE. NOT ALL SIGN SUPPORT STRUCTURES WILL REQUIRE ELECTRICAL SERVICE. REFER TO OVERHEAD SIGN STRUCTURE LOCATION DRAWING FOR INFORMATION CONCERNING REQUIREMENT AND PLACEMENT OF ELECTRICAL DETAILS.

NO.	DATE	REV. BY	DESCRIPTION

REVISIONS (OR CHANGE NOTICES)

NEW MEXICO DEPARTMENT OF TRANSPORTATION STANDARD DRAWING

OVERHEAD SIGNS TUBULAR ELECTRICAL DETAILS

APPROVED _____ DESIGN ENGINEER 5-30-06 DATE

DESIGNED BY SRM DRAWN BY SGL CHECKED BY TLB

701-01-7/14 7 OF 14

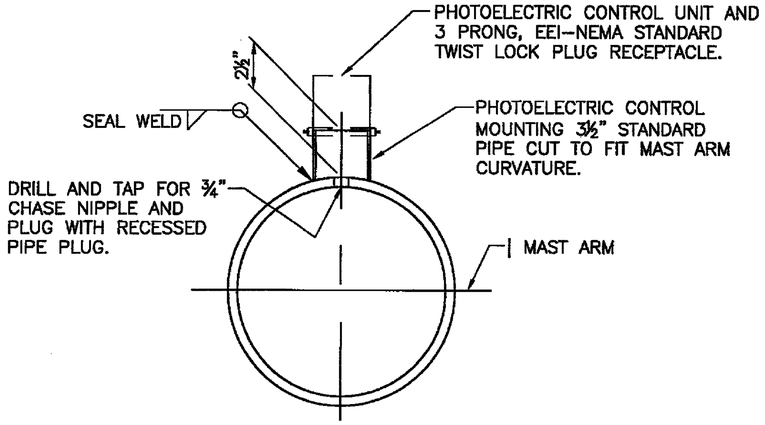

PHOTOELECTRIC CONTROL DETAILS

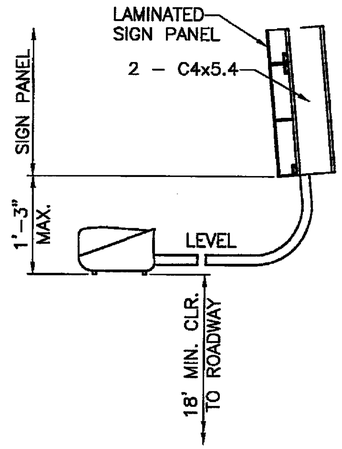

LIGHT MOUNTING

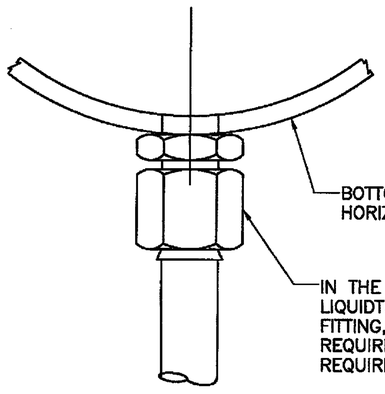

CONDUIT FITTING DETAIL

NOTE:
ITEMS ON THIS SHEET ARE FOR ELECTRICAL SERVICE. NOT ALL SIGN SUPPORT STRUCTURES WILL REQUIRE ELECTRICAL SERVICE. REFER TO OVERHEAD SIGN STRUCTURE LOCATION DRAWING FOR INFORMATION CONCERNING REQUIREMENT AND PLACEMENT OF ELECTRICAL DETAILS.

NO.	DATE	REV. BY	DESCRIPTION

REVISIONS (OR CHANGE NOTICES)

NEW MEXICO
DEPARTMENT OF TRANSPORTATION
STANDARD DRAWING

OVERHEAD SIGNS TUBULAR
ELECTRICAL DETAILS
CONTINUED

APPROVED _____ DESIGN ENGINEER 5-30-06 DATE

DESIGNED BY SRM DRAWN BY SGL CHECKED BY TLB

701-01-8/14 8 OF 14

TYPICAL
(SEE NOTES)

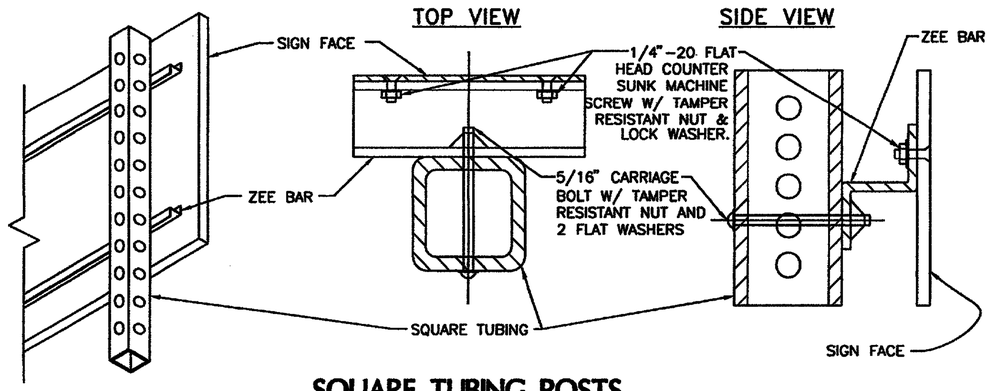

SQUARE TUBING POSTS

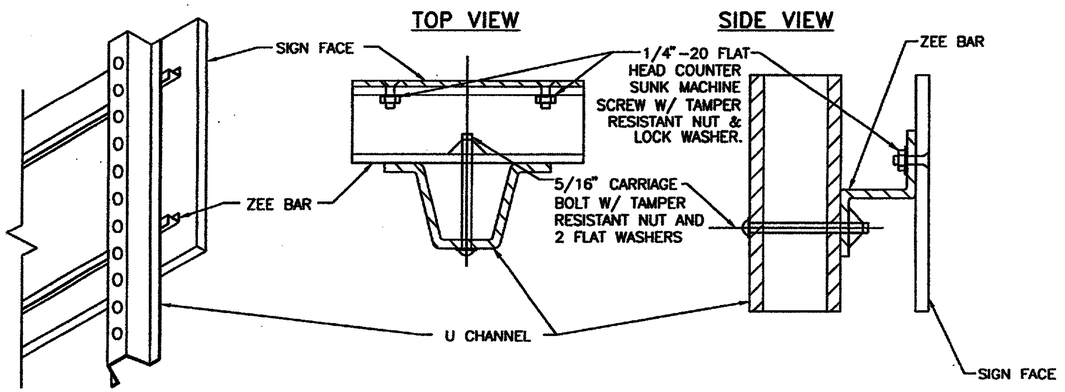

U CHANNEL SUPPORT POSTS

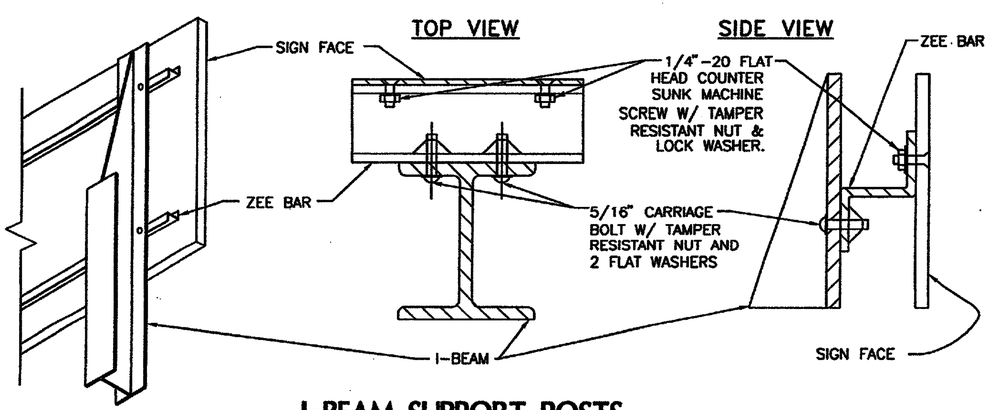

I-BEAM SUPPORT POSTS

ALTERNATE
(SEE NOTES)

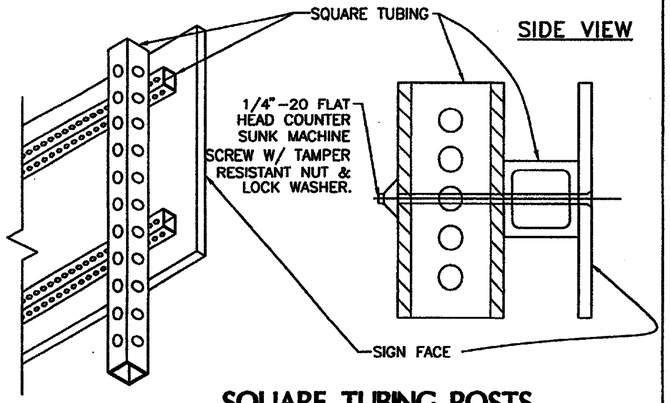

SQUARE TUBING POSTS

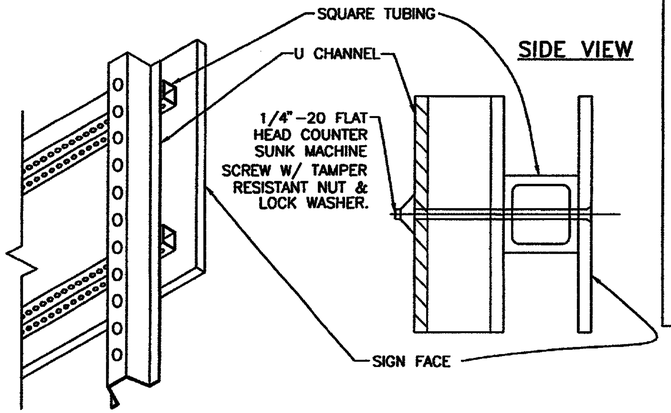

U CHANNEL SUPPORT POSTS

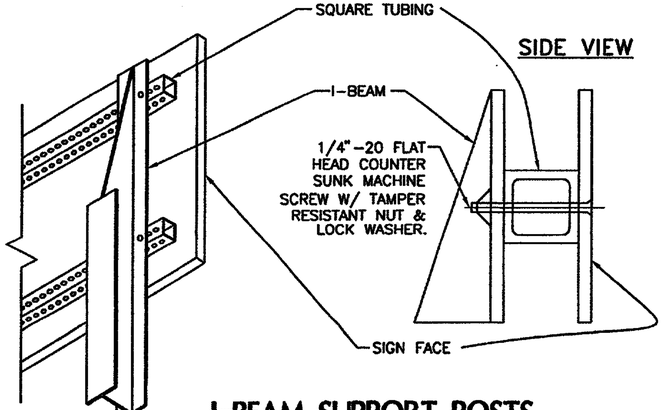

I-BEAM SUPPORT POSTS

GENERAL NOTES:

1. BACKING ZEE SHALL BE ALUMINUM ALLOY 6061-T6. EACH ZEE SHALL BE PROVIDED WITH A 9/16" X 2" HORIZONTAL SLOT FOR EACH POST MOUNTING BOLT.
2. BACKING ZEE SHALL BE FASTENED TO THE SIGN BLANK WITH 1/4" - 20 X 3/4" FLAT HEAD COUNTER SUNK MACHINE SCREWS WITH NUT AND LOCK WASHER (CADMIUM OR GALVANIZED OR 2024-T4 ALUMINUM-ALLOY) FASTENERS AT 9" +/- 1/2" INTERVALS.
3. BACKING ZEE WITH SIGN FACES SHALL BE FASTENED TO THE SIGN SUPPORT POST WITH 5/16" CARRIAGE BOLT, TAMPER RESISTANT NUT & TWO WASHERS GALVANIZED OR CADMIUM PLATED TO ASTM B-766 SPECIFICATION.
4. BACKING ZEE IS NOT NEEDED WHERE SIGN IS TO BE MOUNTED ON ONE POST AND IS APPROXIMATELY TEN AND A HALF (10.5) SQUARE FEET OR LESS.
5. ALTERNATE BACKING MAY BE 1-1/2" PERFORATED SQUARE TUBING AND ASSOCIATED HARDWARE, DESCRIBED IN SERIAL 701-02-1/2 AND 701-02-2/2
6. ALUMINUM PANEL SIGNS UNDER 24" IN WIDTH SHALL BE 0.08" MINIMUM THICKNESS 6061-T6 OR 5052-H38 ALUMINUM ALLOY. ALUMINUM PANEL SIGNS 24" AND OVER IN WIDTH SHALL BE SINGLE SHEET 6061-T6 OR 5052-H38 ALUMINUM ALLOY 1/8" MINIMUM THICKNESS.
7. BACKING ZEES SHALL BE 3" X 2-3/4" X 1/4" AT 2.33 LBS. PER FT. FOR 6061-T6 ALUMINUM.
8. EXPOSED BOLT HEADS ON THE FACE OF THE SIGN SHALL BE COLORED AND REFLECTORIZED TO MATCH THE SURROUNDING COLOR.

NO.	DATE	REV. BY	DESCRIPTION

REVISIONS (OR CHANGE NOTICES)

NEW MEXICO DEPARTMENT OF TRANSPORTATION STANDARD DRAWING

ALUMINUM SIGN PANEL DETAILS

APPROVED _____ DESIGN ENGINEER _____ DATE

DESIGNED BY___ DRAWN BY ___ CHECKED BY ___

701-03-1/2 SHEET 1 OF 2

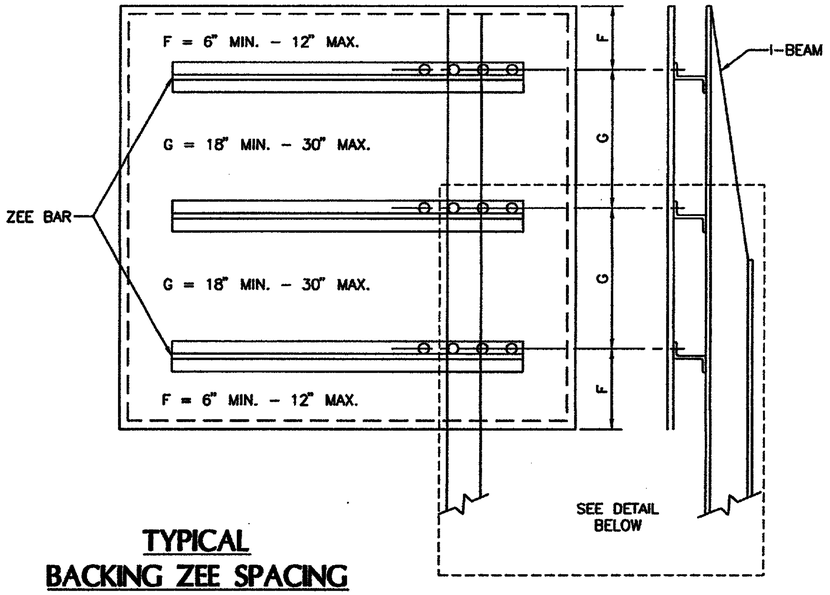

TYPICAL BACKING ZEE SPACING

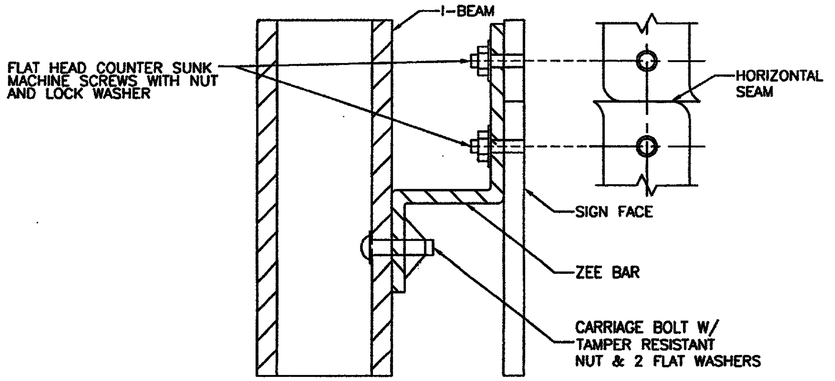

TYPICAL HORIZONTAL SEAM CLOSURE

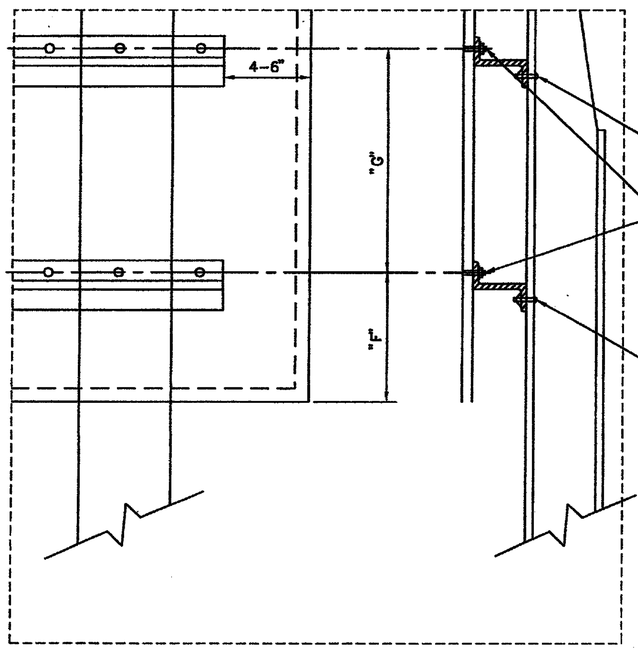

TYPICAL MOUNTING DETAIL

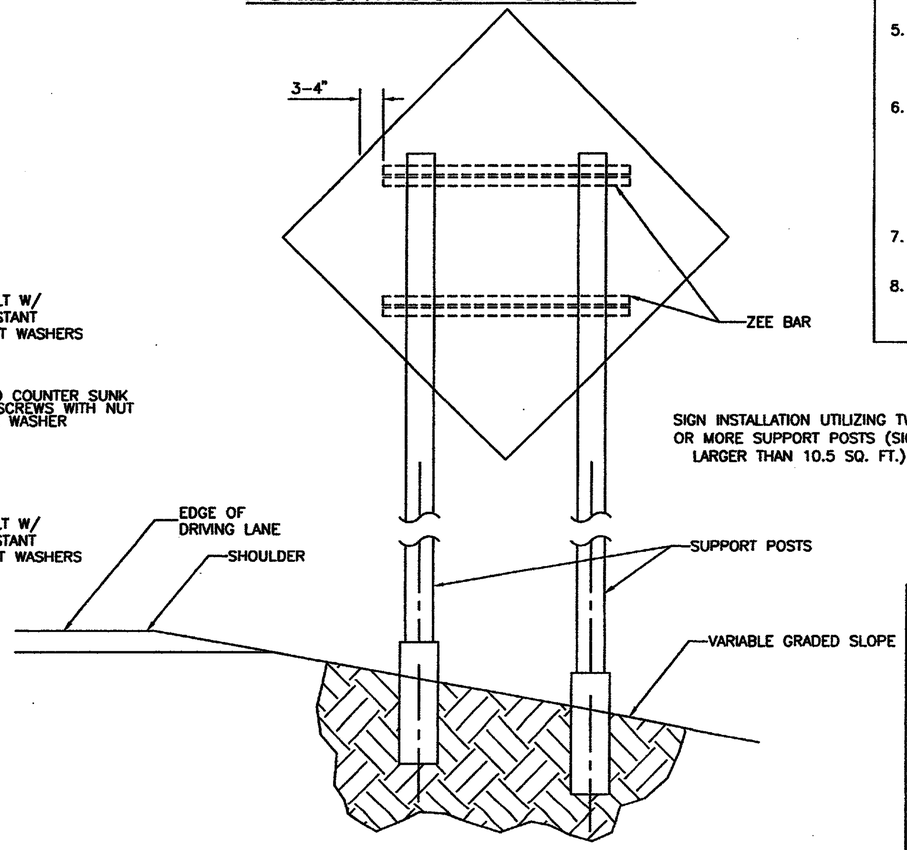

TYPICAL ZEE BACKING FOR DIAMOND SHAPED SIGN

GENERAL NOTES:

1. BACKING ZEE SHALL BE ALUMINUM ALLOY 6061–T6. EACH ZEE SHALL BE PROVIDED WITH A 9/16" X 2" HORIZONTAL SLOT FOR EACH POST MOUNTING BOLT.
2. BACKING ZEE SHALL BE FASTENED TO THE SIGN BLANK WITH 1/4" – 20 X 3/4" FLAT HEAD COUNTER SUNK MACHINE SCREWS WITH NUT AND LOCK WASHER (CADMIUM OR GALVANIZED OR 2024–T4 ALUMINUM–ALLOY) FASTENERS AT 9" ± 1/2" INTERVALS.
3. BACKING ZEE WITH SIGN FACES SHALL BE FASTENED TO THE SIGN SUPPORT POST WITH 5/16" CARRIAGE BOLT, TAMPER RESISTANT NUT & TWO WASHERS GALVANIZED OR CADMIUM PLATED TO ASTM B–766 SPECIFICATION.
4. BACKING ZEE IS NOT NEEDED WHERE SIGN IS TO BE MOUNTED ON ONE POST AND IS APPROXIMATELY TEN AND A HALF (10.5) SQUARE FEET OR LESS.
5. ALTERNATE BACKING MAY BE 1–1/2" PERFORATED SQUARE TUBING AND ASSOCIATED HARDWARE, DESCRIBED IN SERIAL 701–02–1/2 AND 701–02–2/2
6. ALUMINUM PANEL SIGNS UNDER 24" IN WIDTH SHALL BE 0.08" MINIMUM THICKNESS 6061–T6 OR 5052–H38 ALUMINUM ALLOY. ALUMINUM PANEL SIGNS 24" AND OVER IN WIDTH SHALL BE 1/8" MINUMUM THICKNESS 6061–T6 OR 5052–H38 ALUMINUM ALLOY.
7. BACKING ZEES SHALL BE 3" X 2–3/4" X 1/4" AT 2.33 LBS. PER FT. FOR 6061–T6 ALUMINUM.
8. EXPOSED BOLT HEADS ON THE FACE OF THE SIGN SHALL BE COLORED AND REFLECTORIZED TO MATCH THE SURROUNDING COLOR.

NO.	DATE	REV. BY	DESCRIPTION

REVISIONS (OR CHANGE NOTICES)

NEW MEXICO DEPARTMENT OF TRANSPORTATION STANDARD DRAWING

ALUMINUM PANEL SIGN DETAILS

APPROVED _____ DESIGN ENGINEER 11-05 DATE

DESIGNED BY___ DRAWN BY ___ CHECKED BY ___

701–03–2/2 SHEET 2 OF 2

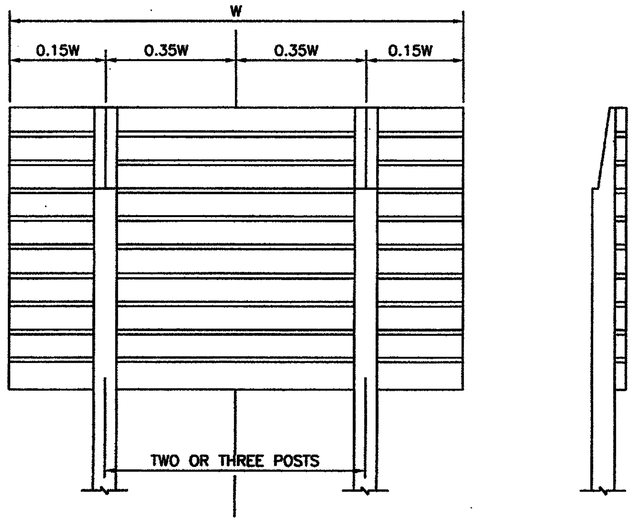

SIGN ASSEMBLY

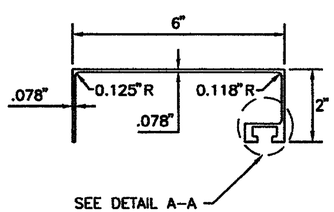

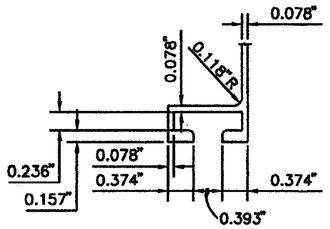

DETAIL A-A

GENERAL NOTES

1. BOLT PANEL TOGETHER EVERY TWO FEET (EVERY OTHER SLOT) USING 3/8" DIAMETER X 3/4" LONG FULLY THREADED HEX BOLTS. ALIGN PANEL FACES AND ENDS. ALTERNATING INTERMEDIATE SLOTS SHOULD FACILITATE DRAINAGE.
2. ALL DIMENSIONS ARE EXTERNAL MEASUREMENTS.

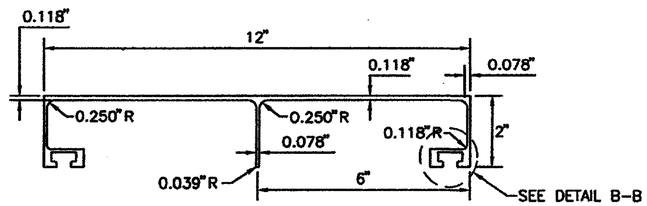

ALUMINUM SIGN PANELS

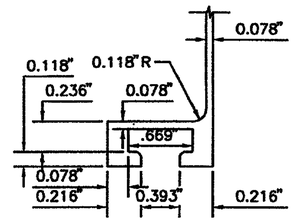

DETAIL B-B

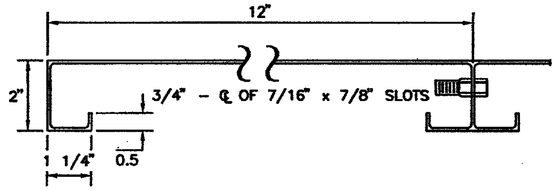

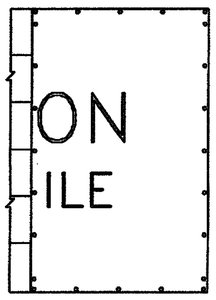

FACING SHEET

FACING SHEETS SHOULD BE THE SAME WIDTH AS THE RETROREFLECTIVE SHEETING BUT A MINIMUM OF 2.50 WIDE. SHOP-DRILL 1/4" HOLES IN SIGN PANEL FACING, SPACED AS INDICATED. DRILL 9/32" HOLES IN EXTRUDED PANEL SIGN FRAMES, USING SIGN PANEL FACINGS AS TEMPLATES. ATTACH SIGN PANEL FACINGS TO SIGN FRAMES WITH 1/4"-20-3/4" FLAT-HEAD COUNTERSUNK MACHINE SCREWS AND 1/4" - 20 NUTS (CADMIUM OR GALVANIZED, OR 2024-T4 ALUMINUM ALLOY.) MACHINE SCREWS TO BE PAINTED SAME COLOR AS BACKGROUND. USE LOCK WASHER BETWEEN NUT AND REAR OF SIGN FRAME.

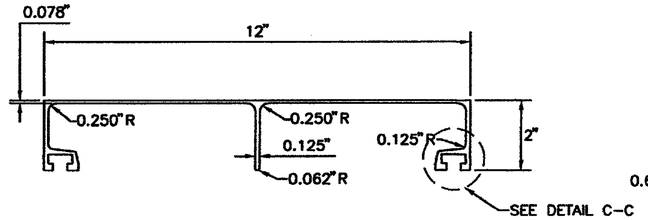

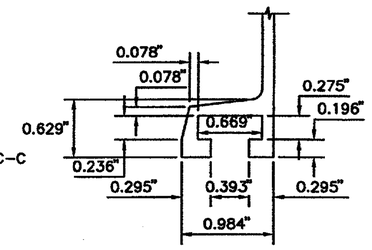

DETAIL C-C

ALUMINUM SIGN PANELS

1. ALUMINUM EXTRUDED PANELS SHALL BE OF ALLOY 6063-T6, ASTM B-221. PANEL BOLTS, NUTS, BEAM CLIP BOLTS, AND WASHERS TO BE OF ALUMINUM ALLOY 2024-T4, ASTM B-221, WITH ALUMILITE 209 OR ALODINE 1000 FINISH, CAST BEAM CLIPS SHALL BE ALUMINUM ALLOY 356-T6.
2. MANUFACTURER SHALL PROVIDE ASSURANCE THAT SIGN PANEL FABRICATED FROM EXTRUSIONS WILL HAVE SUFFICIENT STRENGTH TO WITHSTAND WIND LOAD OF 30 LBS. PER SQ. FT. FROM FRONT OR BACK ON 30 FT. WIDE SIGN MOUNTED ON TWO VERTICAL POSTS.
3. ALUMINUM SURFACES TO BE PLACED IN CONTACT WITH STEEL SHALL BE GIVEN ONE COAT OF ZINC CHROMATE PRIMER IN ACCORDANCE WITH FEDERAL SPECIFICATION TT-P-645.

NO.	DATE	REV. BY	DESCRIPTION

REVISIONS (OR CHANGE NOTICES)

NEW MEXICO DEPARTMENT OF TRANSPORTATION STANDARD DRAWING

EXTRUDED PANEL SIGN FRAME DETAILS

APPROVED _____ DESIGN ENGINEER _____ 1-11-05 DATE

DESIGNED BY___ DRAWN BY ___ CHECKED BY ___

701-04-1/1

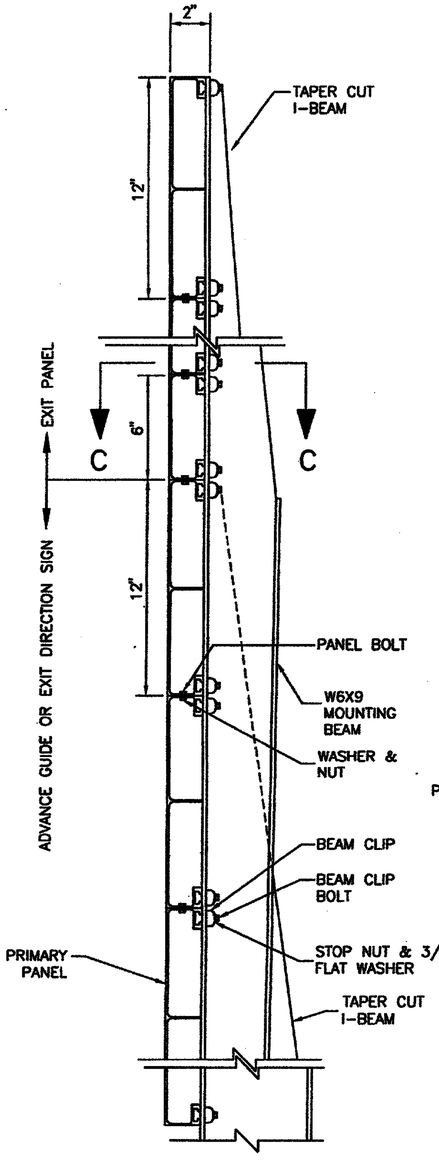

SECTION A-A

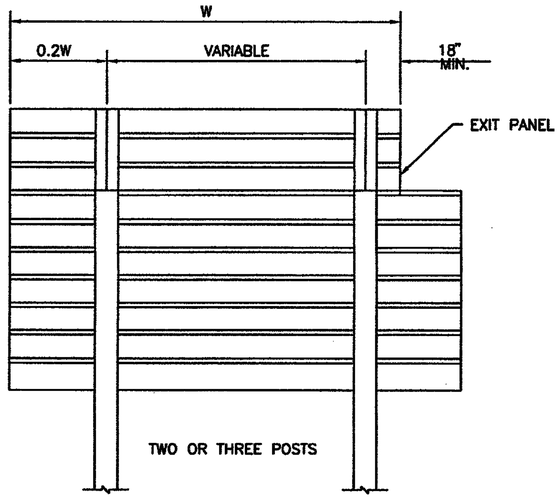

SIGN ASSEMBLY

EXIT PANEL MOUNTED ON SIGN POSTS.

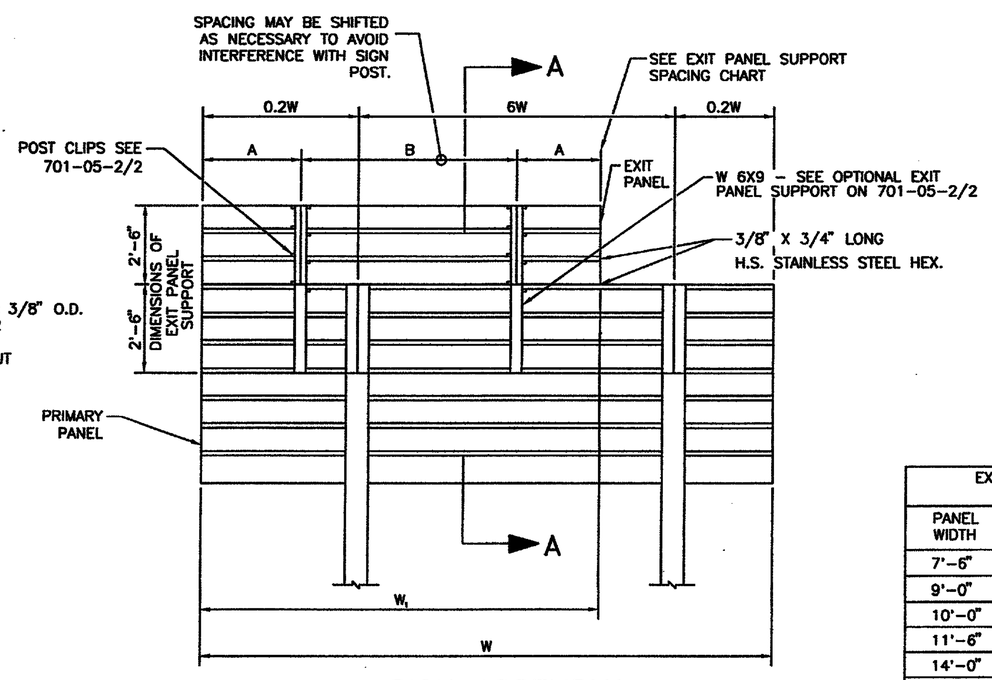

SIGN ASSEMBLY

EXIT PANEL MOUNTED ON AUXILIARY POSTS.

GENERAL NOTES

1. THE EXIT PANEL SHALL BE MOUNTED WITH TWO (2) UPRIGHTS SO THAT ITS RIGHT EDGE IS EVEN WITH THE RIGHT EDGE OF THE PRIMARY SIGN OR REVERSE FOR LEFT HAND EXITS.
2. INSTALL TWO POST CLIPS AT EACH JUNCTION OF EXTRUSIONS AND VERTICAL SUPPORT, ONE ON UPPER EXTRUSION AND ONE ON LOWER EXTRUSION WHERE EXTRUSIONS JOIN ONE ANOTHER.
3. THE EXIT PANEL POSTS MAY BE SHIFTED AS NECESSARY TO AVOID INTERFERENCE WITH THE PRIMARY SIGN POSTS.
4. FOR DETAIL OF SECTION C-C, SEE SERIAL 701-05-2/2.
5. FOR DETAILS OF TAPER CUTS ON I-BEAM POST SEE SERIAL 701-06-2/4.

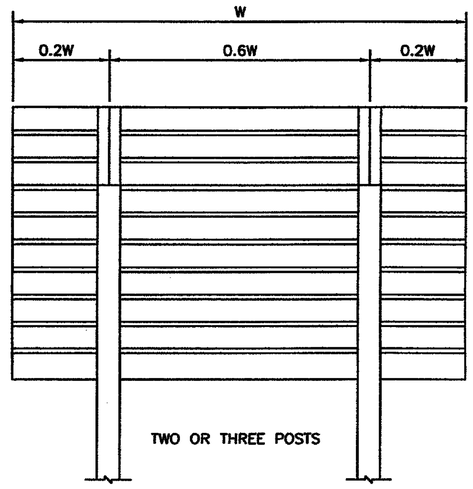

SIGN ASSEMBLY

EXIT PANEL SUPPORT SPACING CHART		
PANEL WIDTH	DIMENSION A	DIMENSION B
7'-6"	1'-3"	5'-0"
9'-0"	2'-0"	5'-0"
10'-0"	2'-6"	5'-0"
11'-6"	2'-9"	5'-11"
14'-0"	2'-6"	8'-0"
15'-0"	3'-0"	8'-0"

NO.	DATE	REV. BY	DESCRIPTION

REVISIONS (OR CHANGE NOTICES)

NEW MEXICO DEPARTMENT OF TRANSPORTATION STANDARD DRAWING

EXTRUDED PANEL SIGN ASSEMBLY DETAILS

APPROVED _____ DESIGN ENGINEER _____ DATE 7/1/05

DESIGNED BY___ DRAWN BY ___ CHECKED BY ___

701-05-1/2 SHEET 1 OF 2

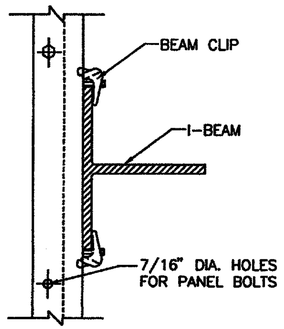

SECTION C-C

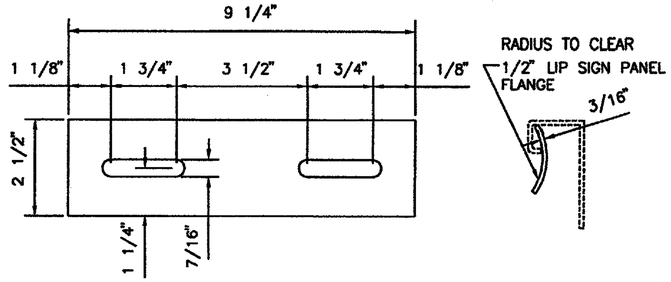

PANEL CLAMP

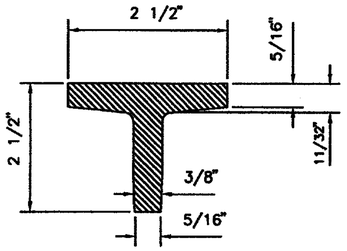

ALUMINUM "T" CROSS SECTION

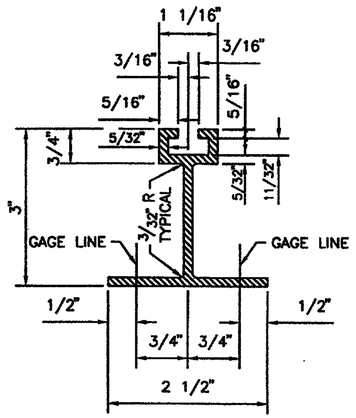

WINDBEAM CROSS SECTION

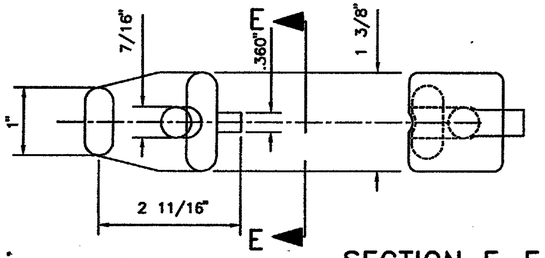

SECTION D-D

SECTION E-E

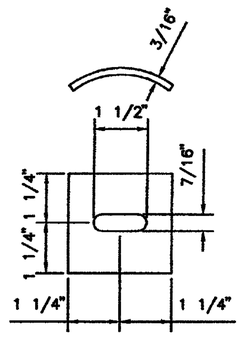

I-BEAM CLAMP

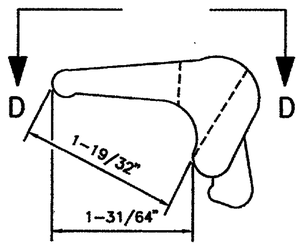

I-BEAM CLIP

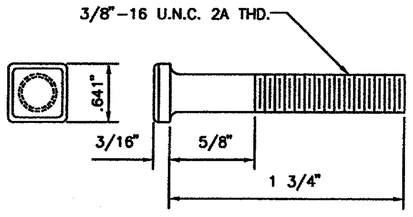

I-BEAM CLIP BOLT

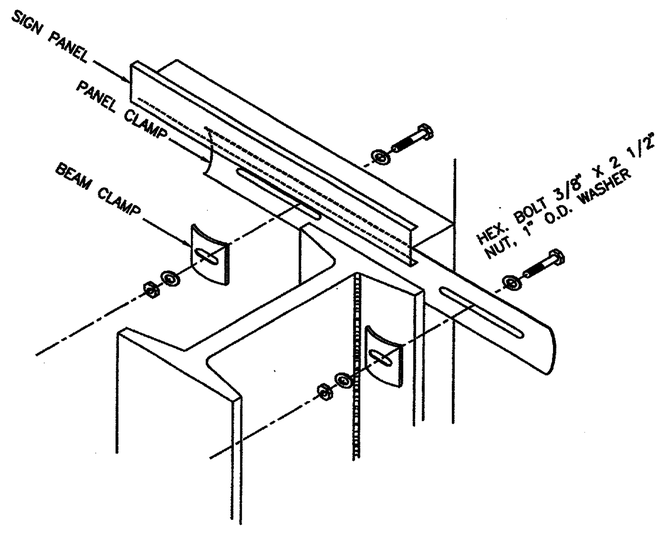

CLAMP ASSEMBLY

STEEL PANEL SIGN CLAMP DETAILS

OPTIONAL EXIT PANEL SUPPORTS (IN LIEU OF W6X9)

GENERAL NOTES

1. THE EXIT PANEL SHALL BE MOUNTED WITH TWO (2) UPRIGHTS SO THAT ITS RIGHT EDGE IS EVEN WITH THE RIGHT EDGE OF THE PRIMARY SIGN OR REVERSE FOR LEFT HAND EXITS.
2. INSTALL TWO POST CLIPS AT EACH JUNCTION OF EXTRUSIONS AND VERTICAL SUPPORT, ONE ON UPPER EXTRUSION AND ONE ON LOWER EXTRUSION WHERE EXTRUSIONS JOIN ONE ANOTHER.
3. THE EXIT PANEL POSTS MAY BE SHIFTED AS NECESSARY TO AVOID INTERFERENCE WITH THE PRIMARY SIGN POSTS.

NO.	DATE	REV. BY	DESCRIPTION

REVISIONS (OR CHANGE NOTICES)

NEW MEXICO DEPARTMENT OF TRANSPORTATION STANDARD DRAWING

EXTRUDED PANEL SIGN ASSEMBLY DETAILS

APPROVED _____ DESIGN ENGINEER _____ DATE 4/1/05

DESIGNED BY___ DRAWN BY ___ CHECKED BY ___

701-05-2/2 SHEET 2 OF 2

SIGN FACE DETAILS

FOR CONSTRUCTION/MAINTENANCE

NOTES: 1. SIGNS SHALL MEET SPECIFICATIONS IN THE STANDARD HIGHWAY SIGN MANUAL AND MUTCD (CURRENT EDITIONS).
2. SEE MUTCD (CURRENT EDITION) FOR ADDITIONAL SIGNS.
3. ALL SIGNS ARE BLACK ON ORANGE UNLESS OTHERWISE SPECIFIED.

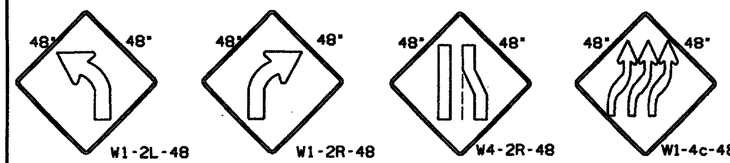

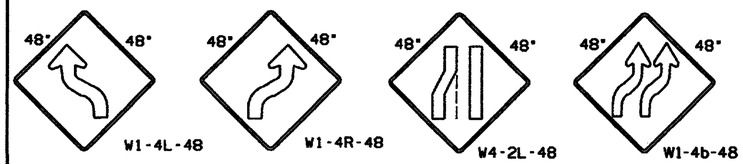

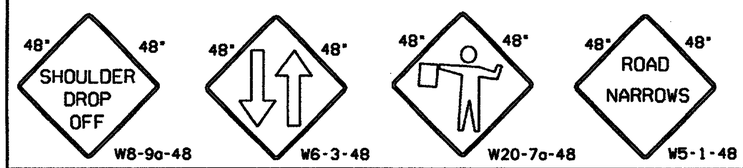

THESE SIGNS REQUIRE APPROPRIATE DISTANCE INDICATION (1 1/2 MILE, 1 MILE, 1/2 MILE, 1500 FT., 750 FT., 700 FT.,500 FT., 350 FT.)

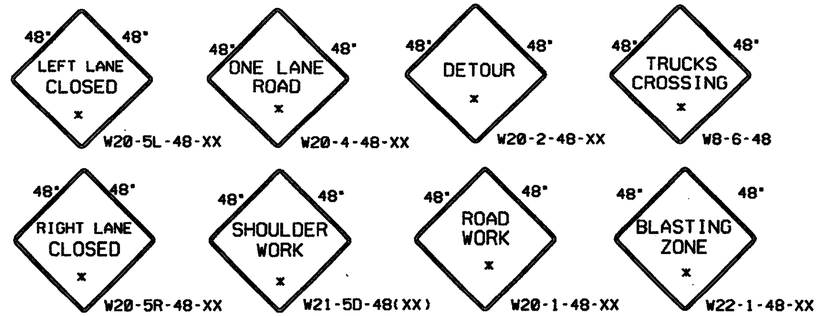

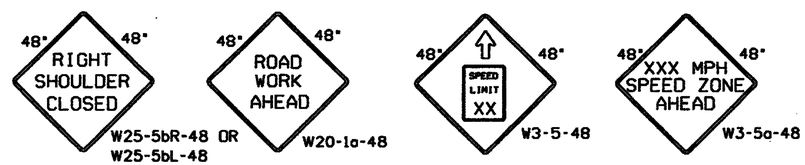

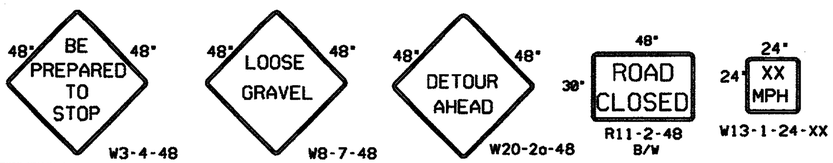

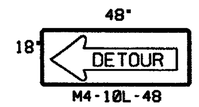

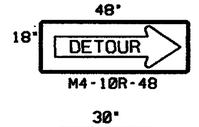

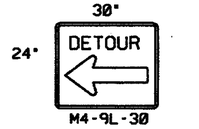

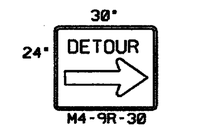

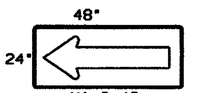

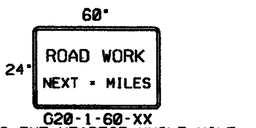

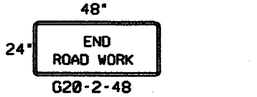

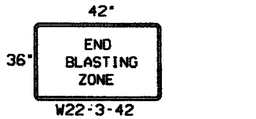

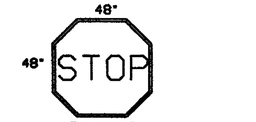

36"X48" FOR NON-INTERSTATE USE ONLY

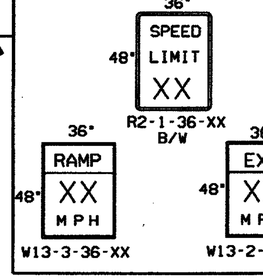

48"X60" FOR INTERSTATE USE ONLY

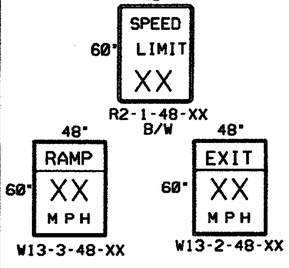

8 FT. TYPE III BARRICADES ⊢ - BARRICADE SYMBOL

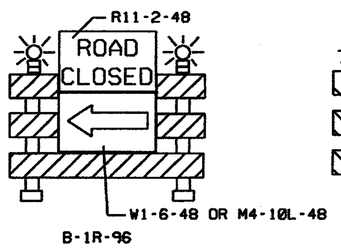

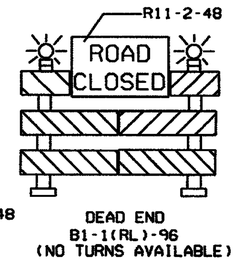

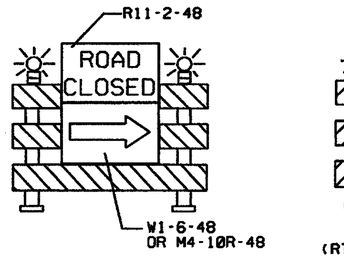

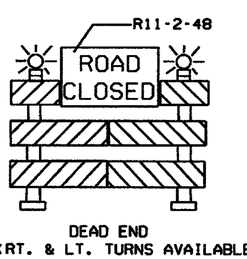

~~NMSHTD LOGO: RED/BLUE/YELLOW/WHITE/BLACK~~

BORDER THICKNESS - 1"
RADIUS - 1"
INSET - 0
SP-1

PROJECT COST TO BE ROUNDED TO THE NEAREST 1 DOLLAR.
SEASON - SUMMER/WINTER/FALL/SPRING.
PROJECT COST, SCHEDULED COMPLETION SEASON, & YEAR SHALL BE PLACED BY THE SIGN MANUFACTURER.

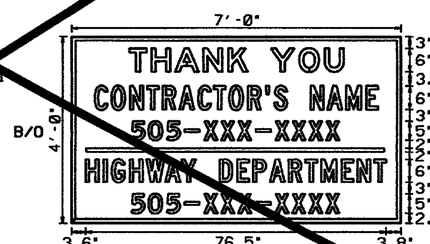

BORDER THICKNESS - 1" SP-2
RADIUS - 1"
INSET - 0

THE CONTRACTOR'S LOCAL PHONE NUMBER AND THE HIGHWAY DEPARTMENT PROJECT MANAGER'S PHONE NUMBER SHALL BE PLACED BY THE SIGN MANUFACTURER.

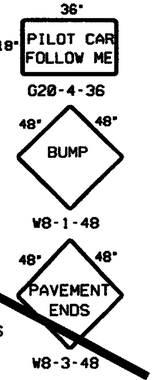

NO.	DATE	REV. BY	DESCRIPTION
REVISIONS (OR CHANGE NOTICES)			

NEW MEXICO
DEPARTMENT OF TRANSPORTATION
STANDARD DRAWING

CONSTRUCTION SIGN FACE DETAILS

APPROVED _____ DESIGN ENGINEER _____ DATE 4-25-05

DESIGNED BY___ DRAWN BY___ CHECKED BY___

702-01-1/3

CHANNELIZATION DEVICES

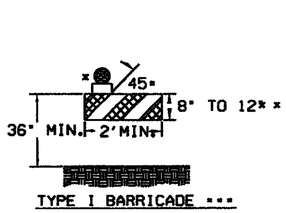

TYPE I BARRICADE ***

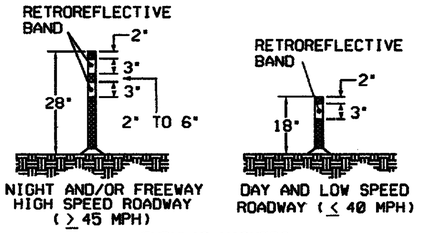

NIGHT AND/OR FREEWAY HIGH SPEED ROADWAY (≥ 45 MPH)

DAY AND LOW SPEED ROADWAY (≤ 40 MPH)

TUBULAR MARKERS

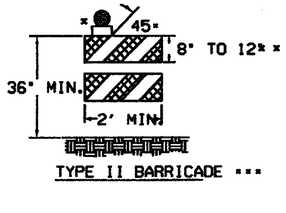

TYPE II BARRICADE ***

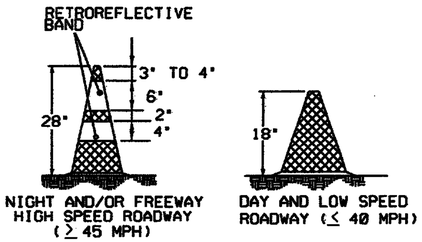

NIGHT AND/OR FREEWAY HIGH SPEED ROADWAY (≥ 45 MPH)

DAY AND LOW SPEED ROADWAY (≤ 40 MPH)

CONES

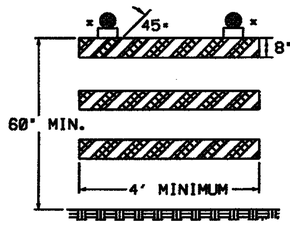

TYPE III BARRICADE*

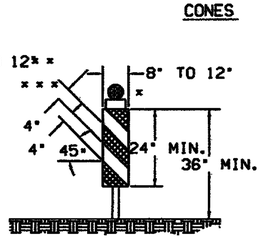

VERTICAL PANEL* *

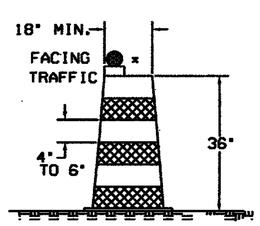

DRUM

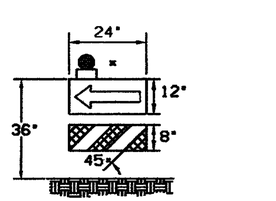

DIRECTION INDICATOR BARRICADE

* WAITING LIGHTS (OPTIONAL) SEE NOTE 4.

* * NOMINAL LUMBER DIMENSIONS ARE SATISFACTORY FOR BARRICADE RAIL WIDTH DIMENSIONS

* * * RAIL STRIPE WIDTHS SHALL BE 6 INCHES. EXCEPTION: WHERE RAIL LENGTHS ARE LESS THAN 36 INCHES, THEN 4 INCH WIDE STRIPES MAY BE USED.

THE SIDES OF BARRICADES FACING TRAFFIC SHALL HAVE RETROREFLECTIVE RAIL FACES. VERTICAL PANELS AND BARRICADES USED ON HIGH-SPEED ROADWAYS, EXPRESSWAYS, AND FREEWAYS SHALL HAVE A MINIMUM OF 270 SQUARE INCHES OF RETROREFLECTIVE AREA FACING TRAFFIC.

CHANNELIZATION DEVICE CHARACTERISTICS

	BARRICADE TYPE. I	BARRICADE TYPE.II	BARRICADE TYPE.III	VERTICAL PANELS	DRUMS
WIDTH OF RAIL	8"MIN-12"MAX	8"MIN-12"MAX	8"MIN-12"MAX		
LENGTH OF RAIL	2'MIN-8'MAX	2'MIN-4'MAX	4' OR 8'		
WIDTH OF STRIPES	6" * * *	6" * * *	6" * * *	4" * * *	4" TO 6"
HEIGHT	36" MIN	36" MIN	60" MIN	36" MIN	36"
TYPE OF FRAME	SEE NOTE NO. 1	SEE NOTE NO. 1	SEE NOTE NO. 1	SEE NOTE NO. 1	
TEMPORARY/PERMANENT	TEMP.	TEMP.	TEMP. OR PERM.	TEMP.	TEMP.
REFLECTIVE SHEETING	TYPE III	TYPE III	TYPE III	TYPE III	SEE NOTE NO. 2

PORTABLE SIGN SUPPORTS

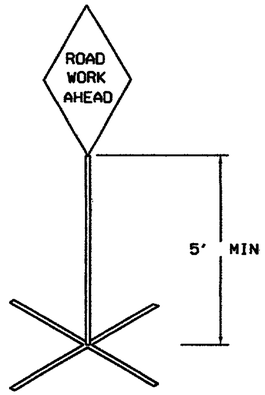

OPTION 1

ALUMINUM/WOOD

W/PORTABLE STAND

MIN HEIGHT - 5'

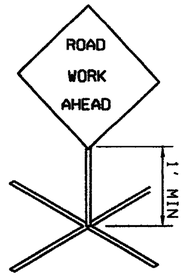

OPTION 2

VINYL/PLASTIC

W/PORTABLE STAND

LOW/TYPICAL HEIGHT

GENERAL NOTES:

1. CRASHWORTHINESS
   ALL BARRICADES, CHANNELIZATION DEVICES, AND PORTABLE SIGN SUPPORTS SHALL MEET FHWA CRASHWORTHINESS REQUIREMENTS AS PER NCHRP REPORT 350 GUIDELINES & SHALL BE ON THE DEPARTMENT'S APPROVED PRODUCT LIST.

2. RETRO-REFLECTIVITY, COLOR
   BARRICADES AND CHANNELIZATION DEVICES SHALL MEET THE REQUIREMENTS OF THE CURRENT MUTCD, PART 6 AND SECTION 702, OF THE NEW MEXICO DEPARTMENT OF TRANSPORTATION STANDARD SPECIFICATIONS, TRAFFIC CONTROL DEVICES FOR CONSTRUCTION.

3. SEE TRAFFIC CONTROL STANDARD DRAWINGS 'SIGN FACE DETAIL SERIAL, 702-01-1/3 FOR RAIL STRIPE DIRECTIONS AND SIGNAGE REQUIREMENTS FOR THE TYPE III BARRICADES.

4. LIGHTING
   TYPE "A" FLASHING OR TYPE "C" STEADY-BURN LIGHTS, WHEN SPECIFIED IN THE CONTRACT, SHALL BE POSITIONED ABOVE THE TOP RAIL OF THE BARRICADE, FACING TRAFFIC. VERTICAL PANEL AND DRUM TYPE "A" FLASHING OR TYPE "C" STEADY-BURN LIGHTS SHALL BE PLACED AS SHOWN HEREIN WHEN SPECIFIED IN THE CONTRACT.

5. FOR PERMANENT TYPE III BARRICADE SEE SERIAL 701-19-1/1 PERMANENT SIGN FOR T INTERSECTION',

6. WHERE BARRICADES AND SIGNS ON PORTABLE SIGN SUPPORTS ARE SUSCEPTIBLE TO OVERTURNING DUE TO HIGH WINDS, SANDBAGS OR THE BALLAST AS PER THE MANUFACTURER'S RECOMMENDATION SHOULD BE USED FOR BALLASTING AND SHOULD BE PLACED ON THE LOWER PART OF THE FRAME OF STAYS SO AS NOT TO INTERFERE WITH THE CRASHWORTHINESS OF THE SUPPORT AND TO PRVIDE THE REQUIRED BALLAST. SAND USED IN SANDBAGS SHALL BE WELL-GRADED AND DRY SO THAT CEMENTING WILL NOT RESULT UNDER FREEZING CONDITIONS.

7. SPACING OF CHANNELIZING DEVICES SHOULD NOT EXCEED A DISTANCE IN FEET OF 1.0 TIMES THE SPEED LIMIT FOR TAPER CHANNELIZATION, AND A DISTANCE IN FEET OF 2.0 TIMES THE SPEED LIMIT FOR TANGENT CHANNELIZATION. FOR MORE GUIDANCE ON PLACEMENT, SEE THE CURRENT EDITION OF THE M.U.T.C.D.

8. LATERAL OFFSET FOR CHANNELIZATION DEVICES AND PORTABLE SIGN SUPPORTS SHALL BE 1 TO 2 FT. MIN. FROM THE EDGE OF TRAVEL LANE.

NO.	DATE	REV. BY	DESCRIPTION

REVISIONS (OR CHANGE NOTICES)

NEW MEXICO
DEPARTMENT OF TRANSPORTATION
STANDARD DRAWING

CHANNELIZATION DEVICES AND PORTABLE SIGN SUPPORTS FOR CONST., MAINT., UTIL., AND INCIDENT MGMT. OPERATIONS

APPROVED _____ DESIGN ENGINEER 4-25-05 DATE

DESIGNED BY__ DRAWN BY__ CHECKED BY__

702-01-2/3

FIGURE 1

SHORT TERM WORK ZONE INTERIM MARKINGS
(IN PLACE FOR LESS THAN 14 CALENDAR DAYS)
(MINIMUM OF 2 COATS OR AS DIRECTED BY THE PROJECT MANAGER)

4 LANE DIVIDED ROADWAY

PAINTED MARKINGS OR MARKING TAPE

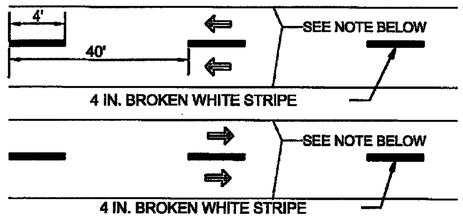

NOTE: EDGE LINES SHALL BE ADDED AS SHOWN IN THE CONSTRUCTION SIGNING PLANS.

TEMPORARY REFLECTIVE RAISED PAVEMENT MARKERS

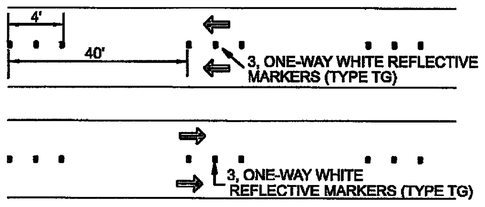

2 LANE TWO-WAY ROADWAY

PAINTED MARKINGS OR MARKING TAPE

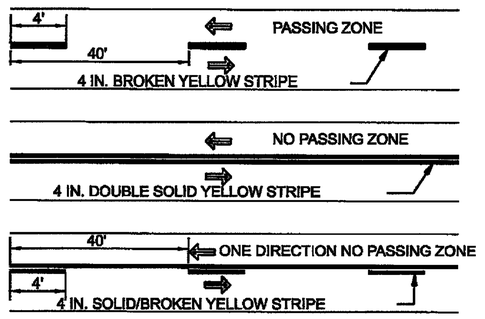

TEMPORARY REFLECTIVE RAISED PAVEMENT MARKERS

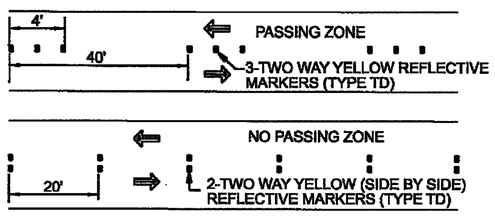

FIGURE 1A

STANDARD WORK ZONE INTERIM MARKINGS
(IN PLACE FOR 14 CALENDAR DAYS OR MORE)
(MINIMUM OF 2 COATS OR AS DIRECTED BY THE PROJECT MANAGER)

4 LANE DIVIDED ROADWAY

PAINTED MARKINGS OR MARKING TAPE

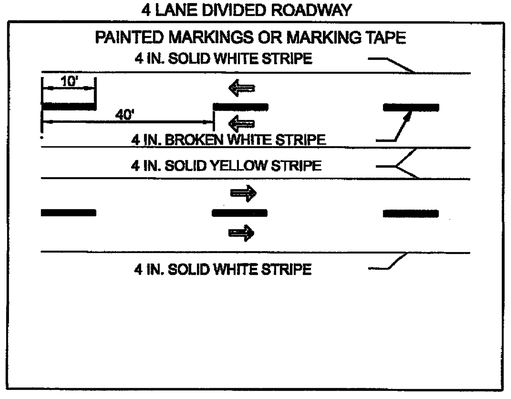

2 LANE TWO-WAY ROADWAY

PAINTED MARKINGS OR MARKING TAPE

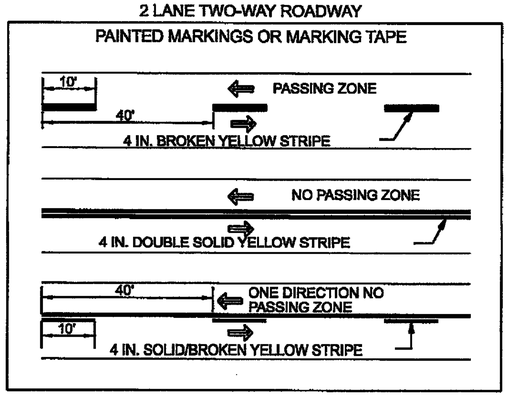

TRAFFIC NOTES:

1. WORK ZONE INTERIM MARKINGS
THE CONTRACTOR SHALL PLACE REFLECTORIZED PAINTED MARKINGS ON EACH INTERMEDIATE LIFT OF SURFACING OR MILLED SURFACE AT THE END OF EACH DAY'S SURFACING OR MILLING OPERATION. THESE MARKINGS SHALL BE PLACED IN ACCORDANCE WITH THE DETAILS SHOWN IN FIGURE 1 OR FIGURE 1A ON THIS SHEET. IN THE EVENT THE PAINTED MARKINGS CANNOT BE PLACED AS DESCRIBED ABOVE, THE CONTRACTOR SHALL, WITH THE APPROVAL OF THE PROJECT MANAGER, PLACE MARKING TAPE OR TEMPORARY REFLECTIVE RAISED PAVEMENT MARKERS IN ACCORDANCE WITH THE DETAILS SHOWN IN FIGURE 1 OR FIGURE 1A ON THIS SHEET OR AS DIRECTED BY THE PROJECT MANAGER. PAYMENT FOR MARKING TAPE WILL BE PAID FOR UNDER THE UNIT PRICE OF REFLECTORIZED PAINTED MARKINGS, UNLESS OTHERWISE SPECIFIED.

THE CONTRACTOR SHALL PLACE REMOVABLE MARKING TAPE OR TEMPORARY REFLECTIVE RAISED PAVEMENT MARKERS AFTER PLACEMENT OF THE FINAL LIFT OF SURFACING IF PERMANENT MARKINGS ARE NOT PLACED DURING THE SAME WORKING DAY. THESE MARKINGS SHALL BE PLACED IN ACCORDANCE WITH THE DETAILS SHOWN IN FIGURE 1 OR 1A ON THIS SHEET OR AS DIRECTED BY THE PROJECT MANAGER.

ON ROADWAYS WITH SEVERE CURVATURE, BROKEN-LINE INTERIM MARKINGS WITH HALF-CYCLE LENGTHS AND A MINIMUM OF 2 FOOT STRIPES OR A GROUP OF TWO TEMPORARY REFLECTIVE PAVEMENT MARKERS SPACED 2 FEET APART MAY BE USED WHERE PASSING IS ALLOWED. INTERIM EDGE LINES OR CHANNELIZATION LINES FOR DELINEATION MAY BE USED AS NEEDED OR AS DIRECTED BY THE PROJECT MANAGER. PASSING/NO PASSING ZONE SIGNING TO SUPPLEMENT INTERIM MARKINGS FOR DELINEATION MAY BE USED AS NEEDED OR AS DIRECTED BY THE PROJECT MANAGER. ALL INTERIM MARKINGS SHALL BE IN ACCORDANCE WITH THE CURRENT EDITION OF THE MUTCD.

2. PAVEMENT DROP-OFF GUIDELINE
IN THE AREAS OF PAVEMENT OPERATIONS OR OTHER ACTIVITIES WITHIN THE TRAVELED WAY AND ADJACENT TO THE EXISTING TRAVELED LANE, THE CONTRACTOR SHALL ASSURE THAT NO PAVEMENT DROP-OFFS ARE LEFT EXPOSED DURING NON-WORKING HOURS. THE CONTRACTOR SHALL INITIATE CORRECTIVE MEANS AS PER "THE NEW MEXICO DEPARTMENT OF TRANSPORTATION PAVEMENT DROP-OFF GUIDELINE" TO ACHIEVE A MINIMUM 6:1 SLOPE BETWEEN TRAVELED LANES AND A MINIMUM 3:1 SLOPE ADJACENT TO THE EXISTING TRAVELED LANE WITH TWO 11 FOOT DRIVING LANES AS SHOWN IN THE DETAIL BELOW. THIS WORK SHALL BE INCIDENTAL TO CONSTRUCTION AND NO SEPARATE MEASUREMENT OR PAYMENT WILL BE MADE THEREFOR.

3. SEQUENTIAL ARROW
PLACEMENT OF THE SEQUENTIAL ARROW SHALL BE AT OR NEAR THE BEGINNING OF THE LANE CLOSURE TAPER. IN AREAS OF INSUFFICIENT PAVEMENT WIDTH, THE SEQUENTIAL ARROW MAY BE PLACED WITHIN THE TAPER, BUT SHOULD NOT BE PLACED BEYOND MID-POINT OF THE TAPER LENGTH. IN ALL CASES, THE SEQUENTIAL ARROW SHALL BE PLACED BEHIND THE CHANNELIZATION DEVICES.

4. TAPERS IN VERTICAL CURVES
IN THE EVENT THAT A TAPER OCCURS IN A VERTICAL CURVE, A LONGITUDINAL BUFFER SPACE SHALL BE PROVIDED SO AS TO POSITION THE TAPER AND SEQUENTIAL ARROW IN ADVANCE OF THE VERTICAL CURVE TO OBTAIN ADEQUATE SIGHT DISTANCE OF THESE DEVICES.

5. TAPERS IN HORIZONTAL CURVES
IN THE EVENT THAT A TAPER OCCURS IN A HORIZONTAL CURVE, A LONGITUDINAL BUFFER SPACE SHALL BE PROVIDED SO AS TO POSITION THE TAPER AND SEQUENTIAL ARROW IN ADVANCE OF THE HORIZONTAL CURVE TO OBTAIN ADEQUATE SIGHT DISTANCE OF THESE DEVICES.

6. "BUMP", "LOOSE GRAVEL", "LANE DROP-OFF" SIGN PLACEMENT
THE CONTRACTOR SHALL PLACE W8-1-48 SIGNS ("BUMP"-B/FD), W8-7-48 SIGNS ("LOOSE GRAVEL" - B/FD), AND/OR W8-9a-48 SIGNS ("SHOULDER DROP -OFF"- B/FD) IN ADVANCE OF BRIDGE APPROACHES OR OTHER LOCATIONS DURING COLD MILLING AND OVERLAY OPERATIONS AS NEEDED OR AS DIRECTED BY THE PROJECT MANAGER. SEE STANDARD DRAWING 702-01-1/3 FOR SIGN DETAILS. THESE SIGNS AND WORK SHALL BE CONSIDERED INCIDENTAL TO CONSTRUCTION AND NO SEPARATE MEASUREMENT OR PAYMENT WILL BE MADE THEREFORE.

7. STEEL POST AND BASE POSTS
THE CONTRACTOR SHALL HAVE THE OPTION OF SUPPLYING EITHER SQUARE TUBING POSTS OR FLANGED CHANNEL U-POSTS (STEEL POSTS AND BASE PASTS FOR CONSTRUCTION SIGNING) AS PER STANDARD DRAWING 701-02-1/3 OR 701-02-2/3.

8. TRAFFIC CONTROL PLAN CHANGES
NO PAYMENT WILL BE MADE FOR ANY ADDITIONAL COST RESULTING FROM APPROVED TRAFFIC CONTROL PLAN CHANGES REQUESTED BY THE CONTRACTOR.

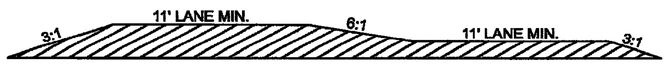

PAVEMENT DROP-OFF DETAIL

NO.	DATE	REV. BY	DESCRIPTION
1	2-27-07	BLJ	EDGE LINE STRIPE ADDED FOR 4-LANE

REVISIONS (OR CHANGE NOTICES)

NEW MEXICO
DEPARTMENT OF TRANSPORTATION
STANDARD DRAWING

CONSTRUCTION
TRAFFIC NOTES

APPROVED _____ DESIGN ENGINEER 2-28-07 DATE

DESIGNED BY___ DRAWN BY___ CHECKED BY___

702-01-3/3

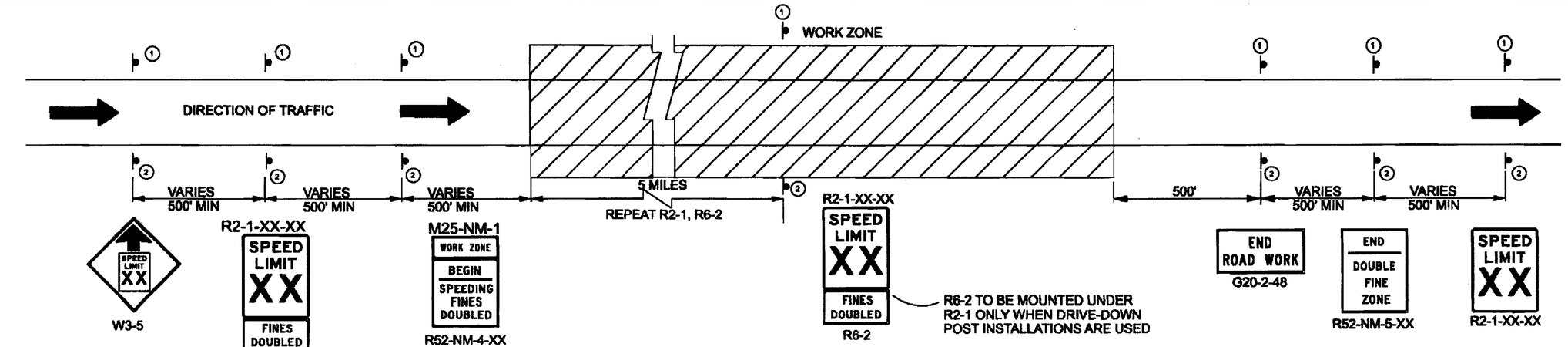

DOUBLE FINES IN WORK ZONES
SIGNING LAYOUT - STEEL SIGN POST/BASE POST INSTALLATIONS
AND PORTABLE SIGN SUPPORT INSTALLATIONS

FOR SIGN FACE DETAILS SEE 702-02-2/2

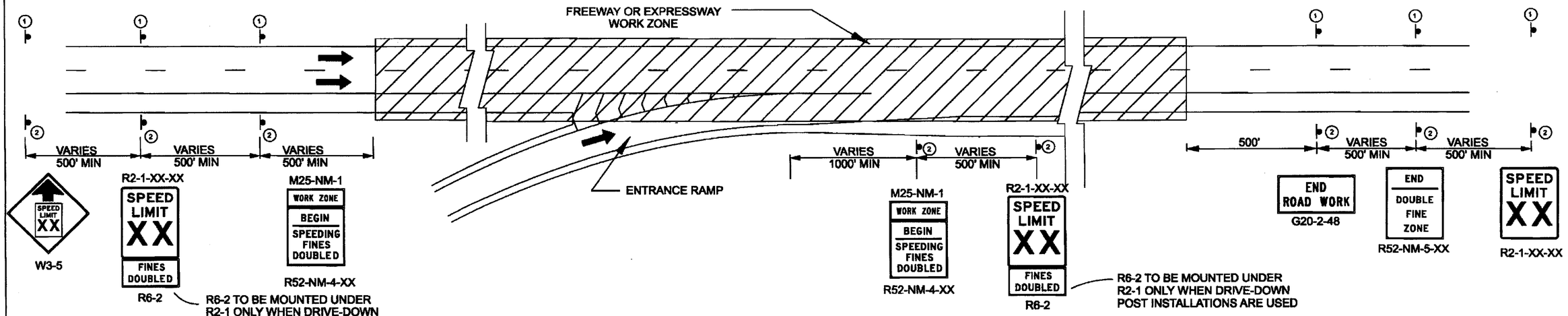

DOUBLE FINES IN WORK ZONES
SIGNING LAYOUT - ENTRANCE RAMP
WITHIN LIMITS OF WORK ZONE

NOTES

1. DOUBLE FINE SIGNS (R52-NM-4, R52-NM-5, R2-1) PLACED ON STEEL SIGN POST/BASE POST SIGN SUPPORTS SHALL INCLUDE DEPARTMENT APPROVED BREAKAWAY SYSTEMS AND SHALL BE REMOVED PROMPTLY ONCE WORK ACTIVITIES ARE COMPLETED.
2. DOUBLE FINE SIGNS (R52-NM-4, R52-NM-5, R2-1) INSTALLED ON PORTABLE SIGN SUPPORTS SHALL ONLY UTILIZE SUPPORTS APPROVED BY THE DEPARTMENT. SIGNS SHALL BE PLACED NO MORE THAN TWO HOURS BEFORE WORK ACTIVITIES ARE TO BEGIN AT THE START OF EACH WORK DAY AND SHALL BE REMOVED AT THE END OF EACH WORK DAY WHEN WORKERS ARE NO LONGER PRESENT.
3. DOUBLE FINE SIGNS (R52-NM-4, R52-NM-5, R6-2) SHALL NOT BE USED WHEN WORK ACTIVITIES ARE OUTSIDE THE CLEAR ZONE, FOR SHORT DURATION OPERATIONS (WORK OCCUPYING A LOCATION FOR UP TO 1 HOUR) AND MOBILE OPERATIONS (WORK MOVING INTERMITTENTLY OR CONTINUOUSLY). SEE THE MUTCD (CURRENT EDITION) FOR MORE INFORMATION.
4. DRAWING IS INTENDED TO SHOW SEQUENCE OF DOUBLE FINE SIGNING ONLY AND IS NOT INTENDED TO BE A COMPLETE CONSTRUCTION SIGNING PLAN. SIGNS SHOWN MAY BE COMBINED WITH OTHER WORK ZONE SIGNING THAT MAY INCLUDE BUT IS NOT LIMITED TO ADVANCE WARNING SIGNS, BOP/EOP SIGNING, SPEED REDUCTION SIGNS, LANE CLOSURES, ETC. SPACING SHALL CONFORM TO THE RECOMMENDATIONS OF THE MOST CURRENT EDITION OF THE MUTCD.
5. DOUBLE FINE SIGNING SEQUENCE SHALL BE REPEATED AT FIVE MILE INTERVALS AND/OR AFTER LOCATIONS WHERE A MAJOR INTERSECTION OR ENTRANCE RAMP OCCURS WITHIN THE LIMITS OF A WORK ZONE.

① DOUBLE POSTING OF SIGNS IS REQUIRED ON FACILITIES WITH THREE OR MORE LANES IN EACH DIRECTION AND/OR TRUCK TRAFFIC OF 10% OR MORE.

② SPEEDS, DISTANCES AND SIGN SIZES MAY VARY IN ACCORDANCE WITH GUIDELINES IN PART 6 OF THE MUTCD OR AS SHOWN ON TRAFFIC CONTROL PLANS.

KATHLEEN A. GARCIA
NEW MEXICO
14700
REGISTERED PROFESSIONAL ENGINEER
4/17/08

NO.	DATE	REV. BY	DESCRIPTION
1	4/16/08	BLJ	REVISED SIGN & NOTES, ADDED RAMP DETAIL

REVISIONS (OR CHANGE NOTICES)

NEW MEXICO
DEPARTMENT OF TRANSPORTATION
STANDARD DRAWING

DOUBLE FINES IN WORK ZONES
SIGNING LAYOUT

APPROVED Kathleen Garcia 4/17/08
DESIGN ENGINEER DATE

DESIGNED BY___ DRAWN BY___ CHECKED BY___

702-02-1/2

INTERSTATE

M-25-NM-1-48
B/FO

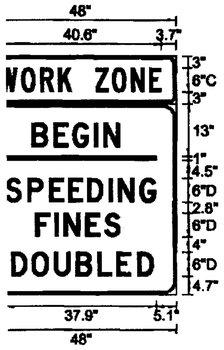

R52-NM-4-48
B/W

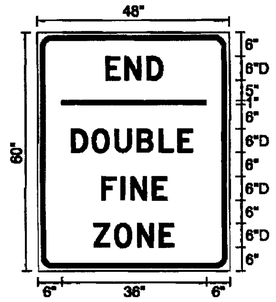

R52-NM-5-48
B/W

BORDER
R=3"
TH=1.25"
IN=0.75"

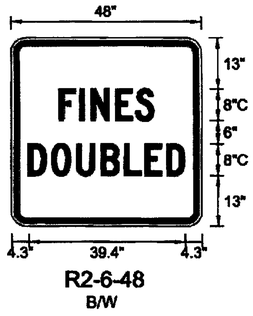

R2-6-48
B/W

ED BELOW R2-1-48 (SPEED LIMIT SIGN)
E DRIVE DOWN POST INSTALLATIONS

NON-INTERSTATE

M-25-NM-1-36
B/FO

BORDER
R=1.5"
TH=0.63"
IN=0.38"

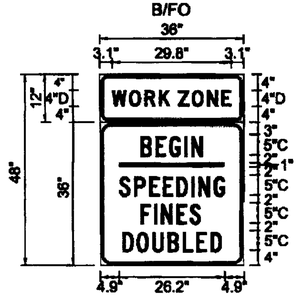

BORDER
R=2.25"
TH=0.88"
IN=0.63"

R52-NM-4-36
B/W

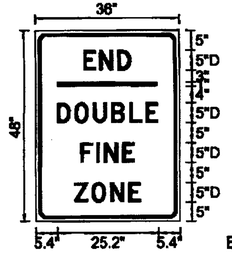

R52-NM-5-36
B/W

BORDER
R=2.25"
TH=0.88"
IN=0.63"

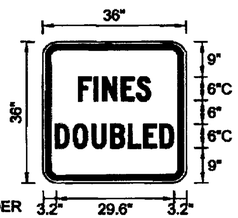

BORDER
R=3"
TH=1.25"
IN=0.75"

R2-6-36
B/W

TO BE PLACED BELOW R2-1-36 (SPEED LIMIT SIGN)
ONLY WHERE DRIVE DOWN POST INSTALLATIONS
ARE USED.

NO.	DATE	REV. BY	DESCRIPTION
1	4/16/08	BLJ	REVISED SIGN FACE

REVISIONS (OR CHANGE NOTICES)

NEW MEXICO
DEPARTMENT OF TRANSPORTATION
STANDARD DRAWING

DOUBLE FINES IN WORK ZONES
SIGN FACE DETAILS

APPROVED Kathleen Garcia 4-17-08
DESIGN ENGINEER DATE

DESIGNED BY___ DRAWN BY___ CHECKED BY___

702-02-2/2

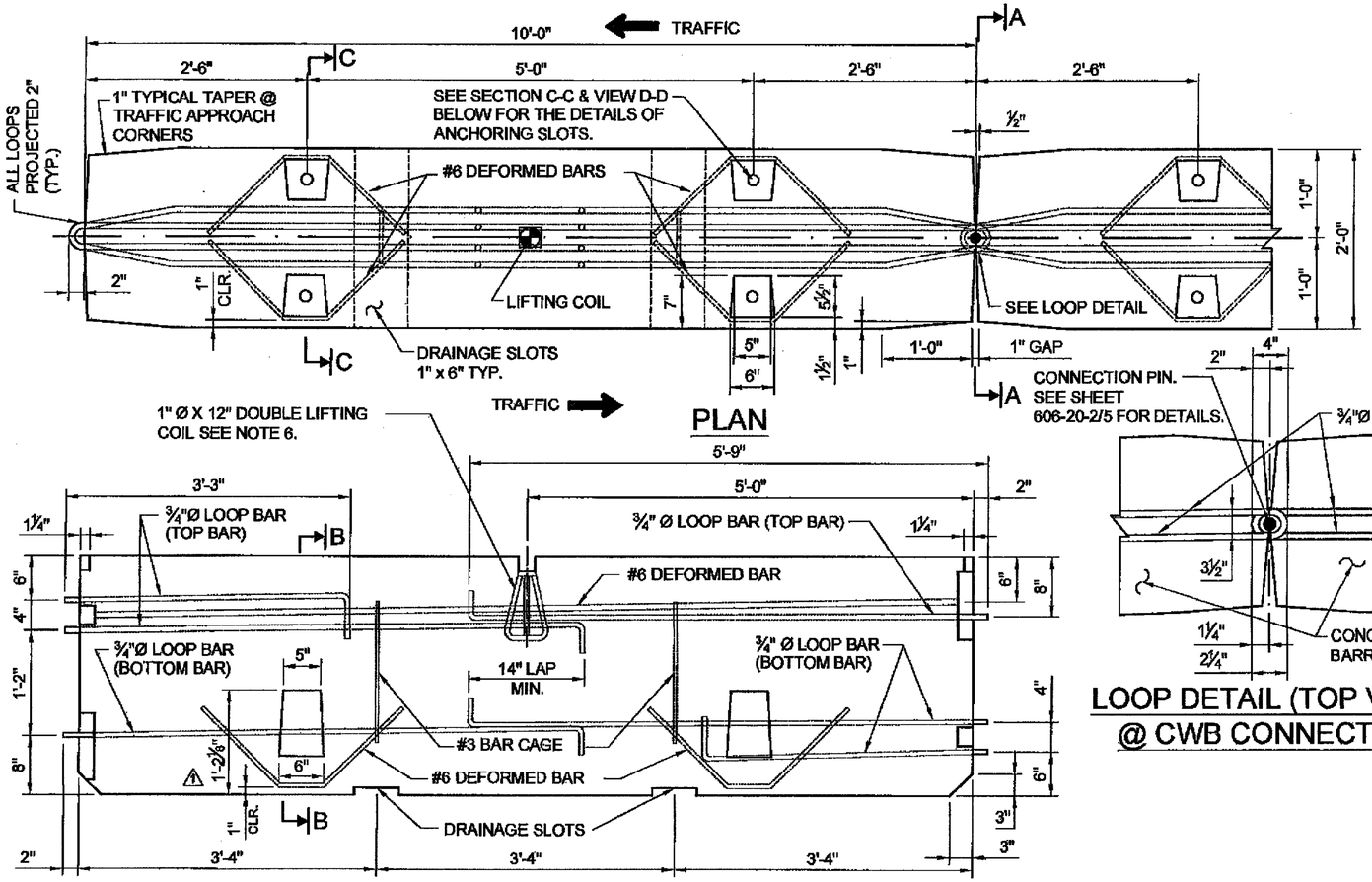

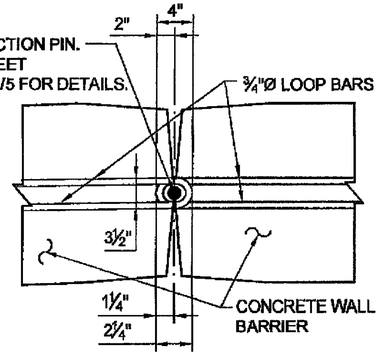

LOOP DETAIL (TOP VIEW) @ CWB CONNECTION

NOTES:

1. ALL WORK SHALL BE IN ACCORDANCE WITH NEW MEXICO STATE DEPARTMENT OF TRANSPORTATION'S STANDARD SPECIFICATIONS FOR HIGHWAY AND BRIDGE CONSTRUCTION, CURRENT EDITION.
2. ALL DEVICES SEEKING DEPARTMENT APPROVAL SHALL CONFORM TO THE FOLLOWING;
   a. FOLLOW THE APPROVAL PROCESS DEFINED BY THE DEPARTMENT.
   b. CONFORM TO NCHRP REPORT 350 FOR CRASHWORTHINESS.
3. CONCRETE SHALL BE CLASS "A" CONCRETE IN ACCORDANCE WITH SECTION 510 OF THE NEW MEXICO STATE TRANSPORTATION DEPARTMENT STANDARD SPECIFICATIONS FOR HIGHWAY AND BRIDGE CONSTRUCTION, CURRENT EDITION.
4. SHOP DRAWINGS SHALL BE SUBMITTED PRIOR TO FABRICATION.
5. CONTRACTOR SHALL NOT INTERMIX THE USE OF CONCRETE WALL BARRIER (CWB) DESIGNS OF TYPE 32, TYPE 42 AND TEMPORARY CONCRETE WALL BARRIER SHOWN ON SHEET 4 of 5 OF THIS SET OF STANDARD DRAWINGS.
6. MANDATORY: 1" x 12" LIFTING COIL WITH DOUBLE FLARED LOOPS (SAFE WORKING LOAD 8000 LBS.).
7. PLACEMENT OF CONCRETE WALL BARRIER SHALL EXTEND A MINIMUM OF 60 FEET BEYOND THE AREA OF CONCERN UNLESS WALL BARRIER IS ANCHORED.
8. IN ORDER TO ALLOW FOR DEFLECTION OF CONCRETE WALL BARRIER, A CLEAR AREA OF AT LEAST 5 FEET MUST BE MAINTAINED BEHIND THE BARRIER UNLESS ANCHORAGE IS USED.
9. CONSECUTIVE LENGTHS OF TEMPORARY CONCRETE WALL BARRIER SHALL ALWAYS BE CONNECTED BY UTILIZING THE CONNECTING PIN ASSEMBLY SHOWN ON 606-20-2/5.

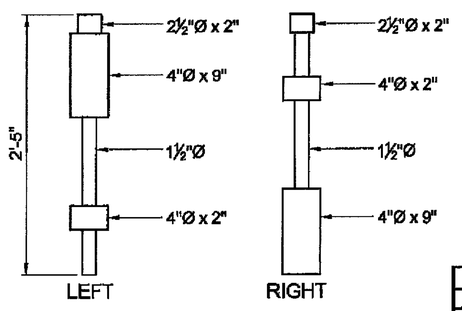

FORM DETAILS

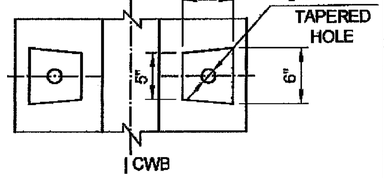

VIEW D-D OF ANCHORING SLOTS

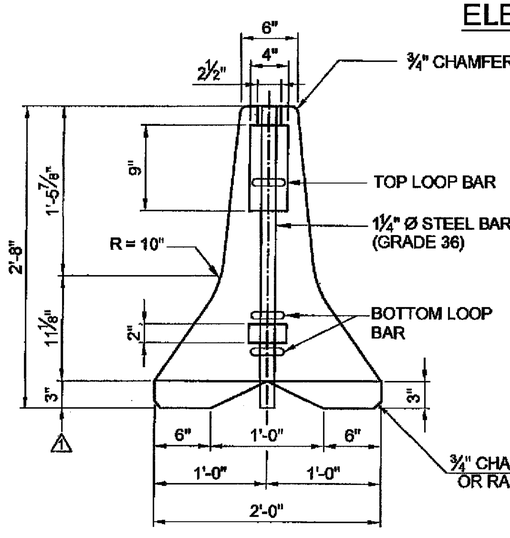

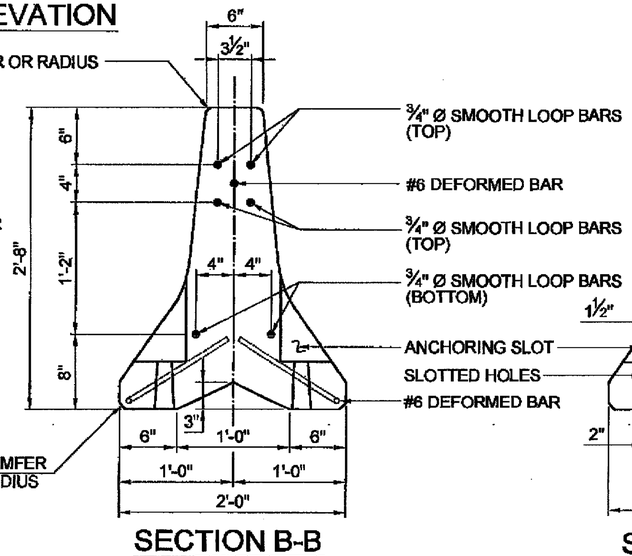

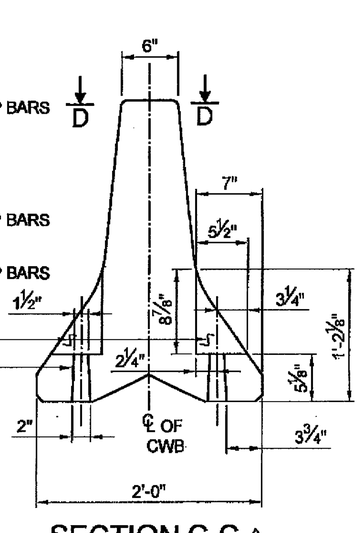

NOTE:
TRIANGULAR SPACE IN BASE OF BARRIER IS TYPICAL. CIRCULAR ARCH SHAPE WILL BE PERMITTED.

TIMOTHY A. MARES NEW MEXICO 14072 REGISTERED PROFESSIONAL ENGINEER
6-18-14

	DATE	BY	DESCRIPTION
1	6/14/2014	TM	CORRECTED DIMENSIONS

REVISIONS (OR CHANGE NOTICES)

NEW MEXICO DEPARTMENT OF TRANSPORTATION STANDARD DRAWING

TEMPORARY PRE-CAST CONCRETE WALL BARRIER

DESIGNED BY: DRAWN BY: SKL CHECKED BY: YML/TM

606-20-1/5 1 of 5

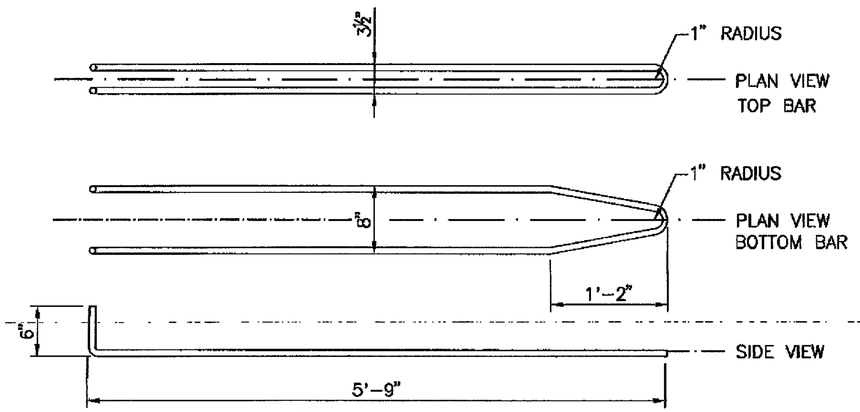

¾"ø SMOOTH BAR
ASTM 709 GRADE 36
(2 REQUIRED)

3/4 INCH DIAMETER SMOOTH LOOP BARS

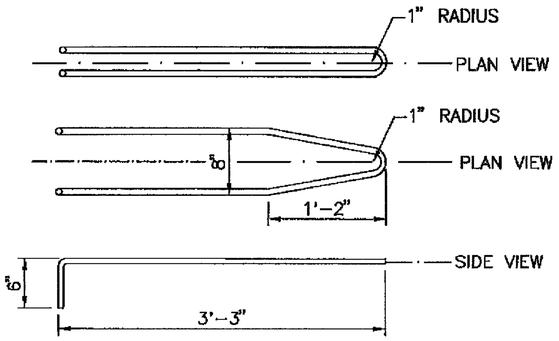

¾"ø DEFORMED REBAR
ASTM 709 GRADE 36
(1 REQUIRED)

3/4 INCH DIAMETER DEFORMED LOOP BARS

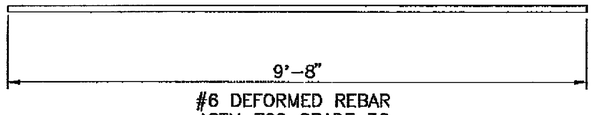

#6 DEFORMED REBAR
ASTM 709 GRADE 36
(1 REQUIRED)

#6 DEFORMED BAR

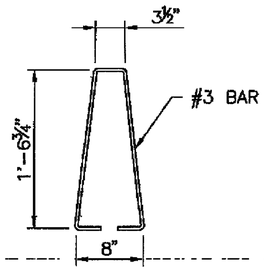

#3 REBAR CAGE DETAILS

(2 REQUIRED)

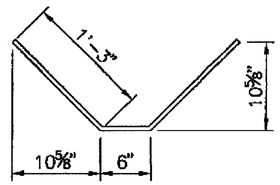

#6 DEFORMED REBAR OF ANCHOR SLOT DETAIL

(4 REQUIRED)

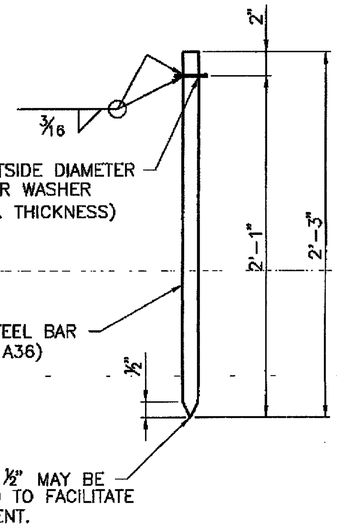

CONNECTING PIN DETAIL

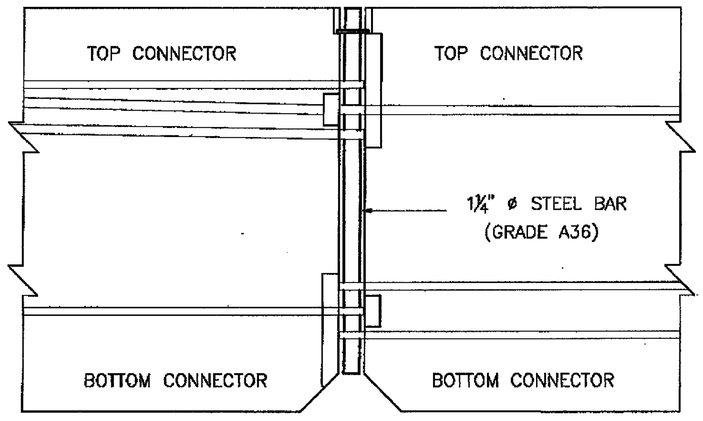

ELEVATION OF CONNECTION

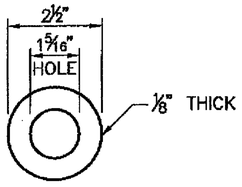

PLAIN GALVANIZED STEEL WASHER FOR 1-1/4" PIN

TIMOTHY A. MARR
NEW MEXICO
14072
REGISTERED PROFESSIONAL ENGINEER
1-10-13

	DATE	BY	DESCRIPTION

REVISIONS (OR CHANGE NOTICES)

NEW MEXICO DEPARTMENT OF TRANSPORTATION STANDARD DRAWING

TEMPORARY PRE-CAST CONCRETE WALL BARRIER DETAILS

DESIGNED BY: DRAWN BY: SKL CHECKED BY: YML/TM

606-20-2/5 2 of 5

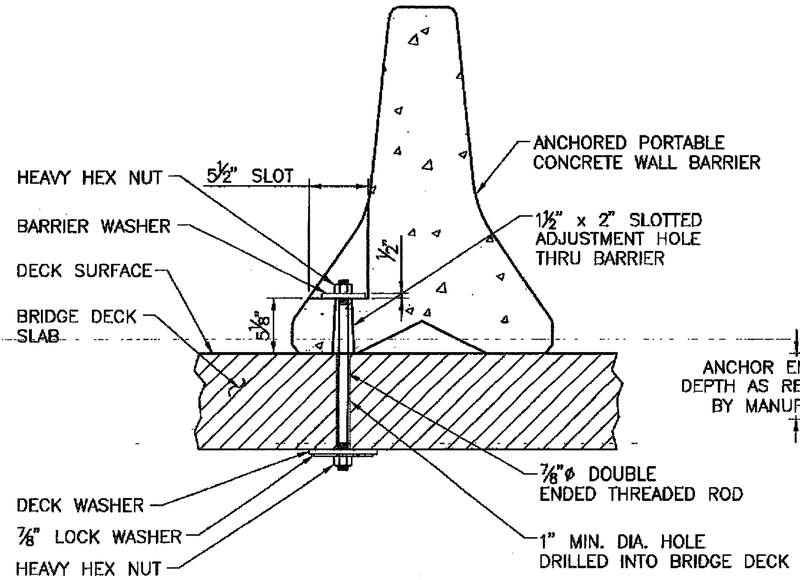

THRU-DECK ANCHOR METHOD

BRIDGE DECKS

NOTE:
METHOD TO BE USED ON BRIDGE DECKS ONLY AT TIMES WHEN SPECIFIED IN THE PLANS, OR WHEN DIRECTED BY THE ENGINEER.

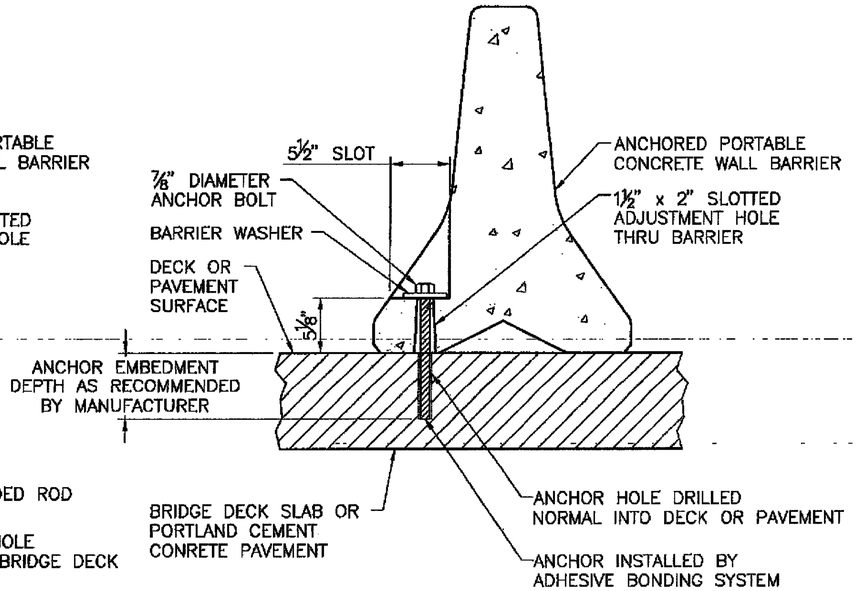

ADHESIVE BONDING SYSTEM ANCHOR METHOD

BRIDGE DECKS AND PORTLAND CEMENT CONCRETE PAVEMENTS

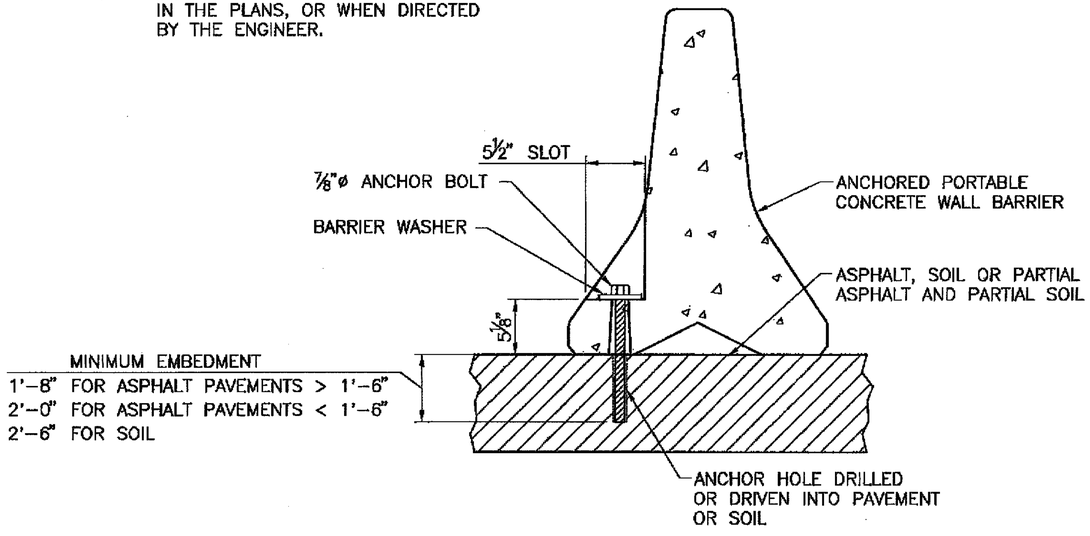

ANCHOR BOLT METHOD

BITUMINOUS PAVEMENTS & SOIL

NOTE: THESE EMBEDMENTS DEPTHS ARE TYPICAL FOR MOST APPLICATIONS HOWEVER, DUE TO VARYING SOIL AND ASPHALT CONDITIONS, THEY MAY NOT BE ADEQUATE FOR ALL CASES.

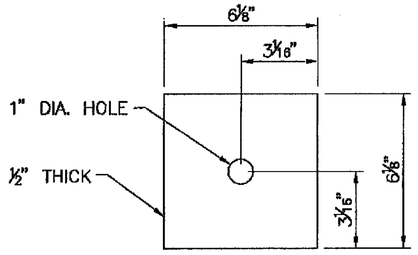

DECK WASHER

THRU DECK ANCHOR METHOD

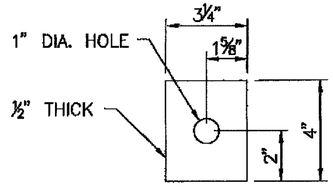

BARRIER WASHER

ALL APPLICATIONS

NOTES:

1. ANCHORS SHALL BE USED WHEN SPECIFIED IN THE PLANS AND/OR WHEN A CLEAR AREA OF 5 FEET BEHIND THE TEMPORARY CONCRET WALL BARRIER CANNOT BE MAINTAINED.
2. EACH 10 FT. SECTION OF BARRIER REQUIRES 2 ANCHOR ASSEMBLIES WHEN INSTALLED ON CONCRETE, AND 4 ANCHOR ASSEMBLIES WHEN INSTALLED ON ASPHALT OR SOIL.
3. EXPANSION ANCHORS WILL NOT BE PERMITTED FOR USE ON BRIDGE DECKS.
4. DO NOT DRILL HOLES INTO PRESTRESSED CONCRETE BRIDGE DECK PANELS.
5. USE ASTM A325 HIGH STRENGTH GALVANIZED ANCHOR BOLTS.
6. DRILL ANCHOR HOLES IN CONCRETE WITH A PNEUMATIC DRILL.
7. FOR BARRIER SECTIONS THAT EXTEND ACROSS CONCRETE JOINTS, DO NOT ANCHOR ON BOTH SIDES OF THE JOINT, OMIT THE ANCHOR CLOSEST TO THE JOINT.
8. TIGHTEN ANCHORS "SNUG FIT". TURN THREADED RODS AT LEAST 1 FULL TURN OF THREADS EXTENDING ABOVE THE NUT. DO NOT PROTRUDE THE TOP OF THE ANCHOR ABOVE THE SIDE OF THE BARRIER.
9. COAT ANCHORS USED WITH THE ADHESIVE BONDING ANCHORING SYSTEM WITH A DEBONDING AGENT SO THE ANCHORS CAN BE EASILY REMOVED. DO NOT REDUCE THE STRENGTH OR ANCHOR SYSTEM WITH THE DEBONDING AGENT.
10. ONCE REMOVED, COMPLETELY FILL ANCHOR HOLES WITH AN APPROVED NON-SHRINK, NON-METALLIC GROUT, OR AS DIRECTED BY THE PROJECT MANAGER.

	DATE	BY	DESCRIPTION

REVISIONS (OR CHANGE NOTICES)

NEW MEXICO DEPARTMENT OF TRANSPORTATION STANDARD DRAWING

TEMPORARY PRE-CAST CONCRETE WALL BARRIER ANCHORING DETAILS

DESIGNED BY: DRAWN BY: SKL CHECKED BY: YML/TM

606-20-3/5 3 of 5

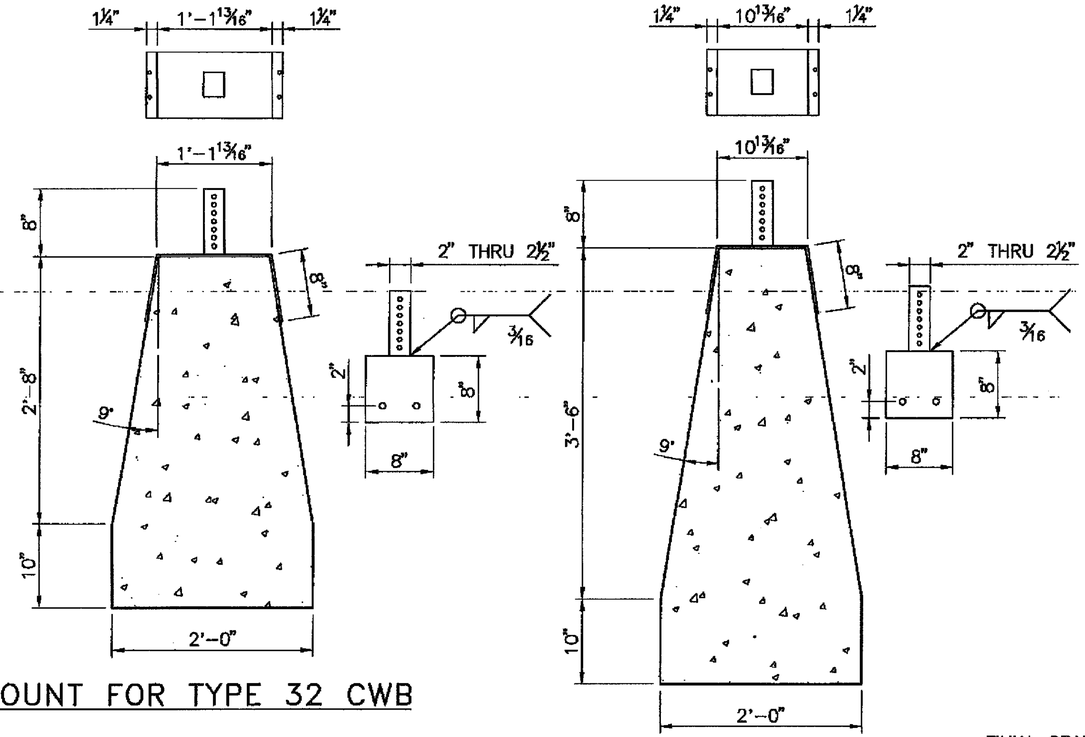

MOUNT FOR TYPE 32 CWB

MOUNT FOR TYPE 42 CWB

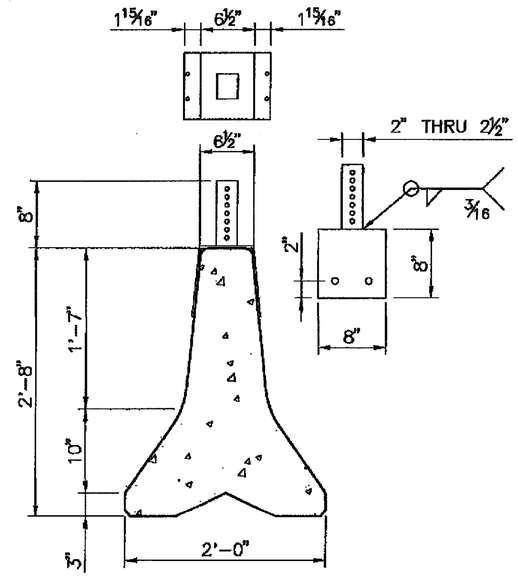

MOUNT FOR TEMPORARY CWB

NOTES:

1. CONCRETE WALL BARRIER SIGN POSTS SHOWN ARE ONLY TO BE USED WHEN NO OPTIONS EXIST FOR GROUND MOUNTED SIGNS.
2. ALL MATERIALS AND WORKMANSHIP SHALL CONFORM TO THE NEW MEXICO STATE DEPARTMENT OF TRANSPORTATION STANDARD SPECIFICATIONS FOR HIGHWAY AND BRIDGE CONSTRUCTION, CURRENT EDITION.
3. ALL HARDWARE SHALL MEET F.H.W.A. CRASH WORTHINESS REQUIREMENTS AS PER N.C.H.R.P. 350 GUIDELINES AND BE ON THE DEPARTMENT'S APPROVED PRODUCT LIST.
4. STRUCTURAL STEEL SHALL BE CARBON STEEL CONFORMING TO AASHTO SPECIFICATION ASTM A 36.
5. ALL BOLTS SHALL BE IN ACCORDANCE WITH PROVISIONS OF SECTION 542 HIGH STRENGTH BOLTS AND SHALL BE GALVANIZED.
6. FOR ANCHORING SIGN MOUNT TO CONCRETE WALL BARRIER, SEE SECTION 522–CONCRETE CHEMICAL ANCHORS AND SECTION 523–CEMENTITIOUS–GROUTED DOWELS AND ANCHORS.

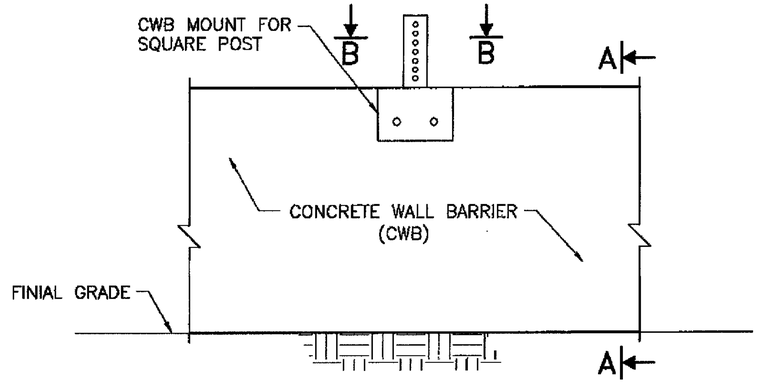

CWB ELEVATION VIEW

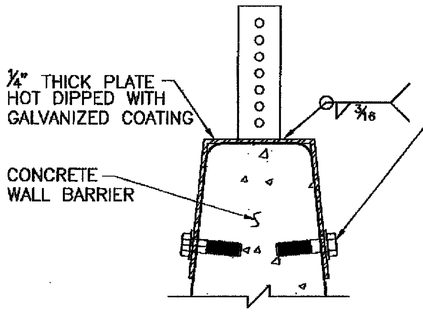

SECTION A–A

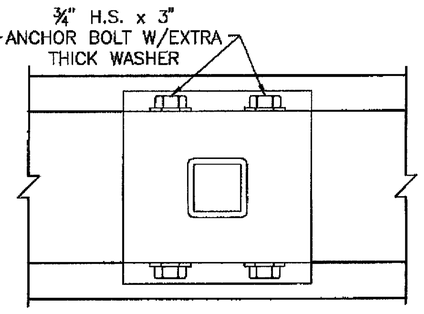

VIEW B–B

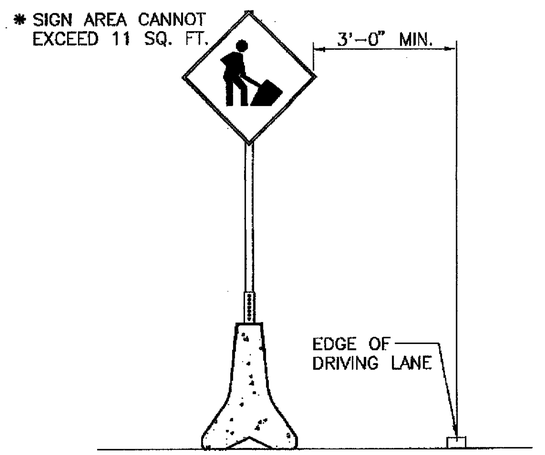

SIGN PLACEMENT

TIMOTHY A. MARRS
NEW MEXICO
14072
REGISTERED PROFESSIONAL ENGINEER
1-10-13

	DATE	BY	DESCRIPTION

REVISIONS (OR CHANGE NOTICES)

NEW MEXICO DEPARTMENT OF TRANSPORTATION STANDARD DRAWING

CONCRETE BARRIER MOUNT FOR SQUARE POST (2" THROUGH 2-1/2")

DESIGNED BY: ___ DRAWN BY: SKL CHECKED BY: YML/TM

606-20-4/5 4 of 5

NOTES:

1. LENGTH OF NEED "L" OF TEMPORARY CWB UPSTREAM OF HAZARD SHALL BE AS SHOWN ON CONSTRUCTION TRAFFIC CONTROL PLANS AND SHALL BE OF ADEQUATE LENGTH TO SHIELD THE APPROPRIATE WORK ZONE CLEAR ZONE FROM TABLE 2. METHODOLOGY USED TO DEVELOP "L" SHALL BE FROM THE MOST RECENT EDITION OF THE AASHTO ROADSIDE DESIGN GUIDE.
2. TAPER RATES (X:Y) FOR TEMPORARY CWB SHALL BE AS SHOWN IN TABLE 1.
3. THE APPROACH END OF THE TEMPORARY CWB SHALL BE SHIELDED WITH AN APPROVED IMPACT ATTENUATOR IF TERMINATED WITHIN THE CLEAR ZONE. APPROVED IMPACT ATTENUATORS ARE AS LISTED IN THE NMDOT APPROVED PRODUCT LISTING AND INCLUDE SAND BARREL ARRAYS PLACED AS SHOWN IN STANDARD DRAWING 720-01-1/2 OR 2/2 OR SYSTEMS THAT MEET NCHRP 350 CRASH TEST REQUIREMENTS. THE APPROACH END OF THE TEMPORARY CWB MAY NOT BE SHIELDED IF TERMINATED OUTSIDE THE WORK ZONE CLEAR ZONE.
4. THE DEPARTURE END OF THE TEMPORARY CWB MAY NOT BE SHIELDED IF OUTSIDE OF THE WORK ZONE CLEAR ZONE FOR OPPOSING TRAFFIC. (NOTE APPLIES ONLY TO MULTI-LANE DIVIDED ROADWAYS.)
5. THERE SHALL BE A 2' MINIMUM SHY DISTANCE BETWEEN THE EDGE OF THE TRAVELED LANE AND EDGE OF TEMPORARY CWB.
6. TEMPORARY CWB TO BE PLACED ON SLOPES OF 10:1 OR FLATTER MEASURED FROM EDGE OF PAVEMENT.

TABLE 1
TEMPORARY CWB TAPER RATES

ROADWAY SPEED LIMIT	MINIMUM FLARE RATE	DESIRABLE FLARE RATE
LESS THAN 45 MPH	8:1	18:1
BETWEEN 45 MPH AND 55 MPH	10:1	24:1
GREATER THAN 55 MPH	15:1	30:1

TABLE 2

APPROACH POSTED SPEED LIMIT	ADT	FRONTSLOPES			BACK SLOPES		
		1:6 OR FLATTER	1:5 to 1:4	1:3	1:3	1:5 to 1:4	1:6 OR FLATTER
		WORK ZONE CLEAR ZONE DISTANCES (FT)					
35 MPH OR LESS	Under 750	4-6	4-6		4-6	4-6	4-6
	750-1500	6-8	8-10		6-8	6-8	6-8
	1500-6000	6-8	10		8-10	8-10	8-10
	Over 6000	10	10-12		10	10	10
35-50 MPH	Under 750	6-8	6-10		4-6	4-6	6-8
	750-1500	10	10-14		6-8	8-10	10
	1500-6000	10-12	12-16		8-10	10	10-12
	Over 6000	12-14	16-18		10	12	12-14
55 MPH	Under 750	6-8	10-12		6	6-8	6-8
	750-1500	10-12	12-16		6-8	10	10-12
	1500-6000	12-14	16-18	**	10	10-12	12-14
	Over 6000	14-16	16-20*		10-12	12-14	14-16
60 MPH	Under 750	10-12	12-16		6-8	8-10	10
	750-1500	12-16	16-20*		8-10	10-12	12-14
	1500-6000	16-18	20-24*		10-12	12-14	16
	Over 6000	18-20*	22-28*		12-14	16	16-18
65-70 MPH	Under 750	12	12-16		6-8	10	10
	750-1500	16	18-22*		8-10	12	12-14
	1500-6000	18-20*	22-26*		10-12	14-16	16-18
	Over 6000	18-22*	24-28*		14-16	16-18	18

* WORK ZONE CLEAR ZONES MAY BE LIMITED TO 18' FOR PRACTICALITY
** USE GUIDANCE FOR PERMANENT ROADWAYS FOUND IN LATEST EDITION OF AASHTO ROADSIDE DESIGN GUIDE

NOTES:
- ALL DISTANCES MEASURED FROM EDGE OF TRAVELED WAY.
- FOR WORK ZONE CLEAR ZONE, THE ADT WILL BE THE TOTAL ADT ON TWO-WAY ROADWAYS AND THE DIRECTIONAL ADT ON ONE-WAY ROADWAYS. TRAFFIC VOLUMES WILL BE EXPECTED TRAFFIC VOLUMES THROUGH THE WORK ZONE.
- THE VALUES FOR BACK SLOPES APPLY ONLY TO A SECTION WHERE THE TOE OF THE BACK SLOPE IS ADJACENT TO THE SHOULDER. FOR ROADSIDE DITCHES, USE PERMANENT ROADWAY GUIDANCE FOUND IN THE MOST CURRENT EDITION OF THE AASHTO ROADSIDE DESIGN GUIDE.
- APPROACH POSTED SPEED IS APPROACH POSTED SPEED PRIOR TO THE WORK ZONE.

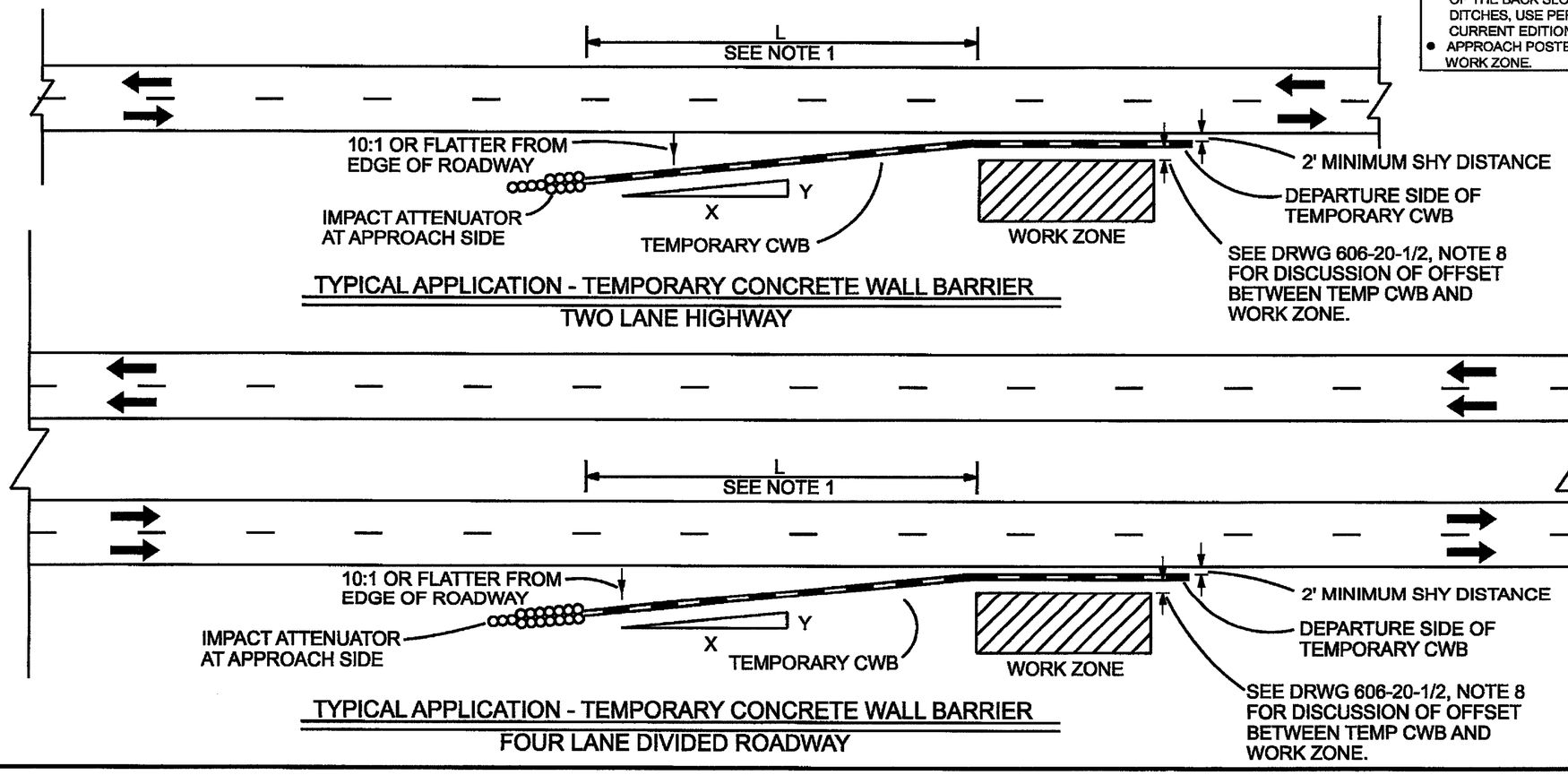

TYPICAL APPLICATION - TEMPORARY CONCRETE WALL BARRIER
TWO LANE HIGHWAY

TYPICAL APPLICATION - TEMPORARY CONCRETE WALL BARRIER
FOUR LANE DIVIDED ROADWAY

NO.	DATE	REV. BY	DESCRIPTION

REVISIONS (OR CHANGE NOTICES)

NEW MEXICO
DEPARTMENT OF TRANSPORTATION
STANDARD DRAWING

TEMPORARY PRE-CAST CONCRETE WALL BARRIER TAPER RATES

APPROVED Stephen S. Brown 2-25-07
DESIGN ENGINEER DATE

DESIGNED BY___ DRAWN BY___ CHECKED BY___

606-20-5/5 SHEET 5 OF 5

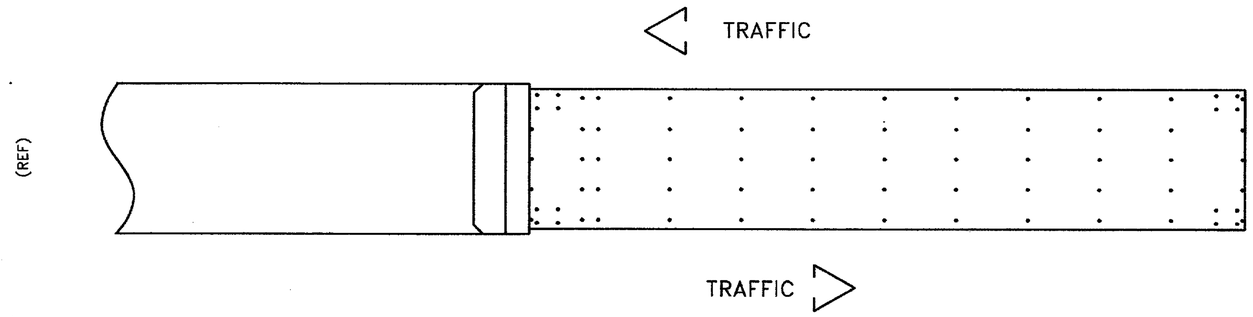

PLAN

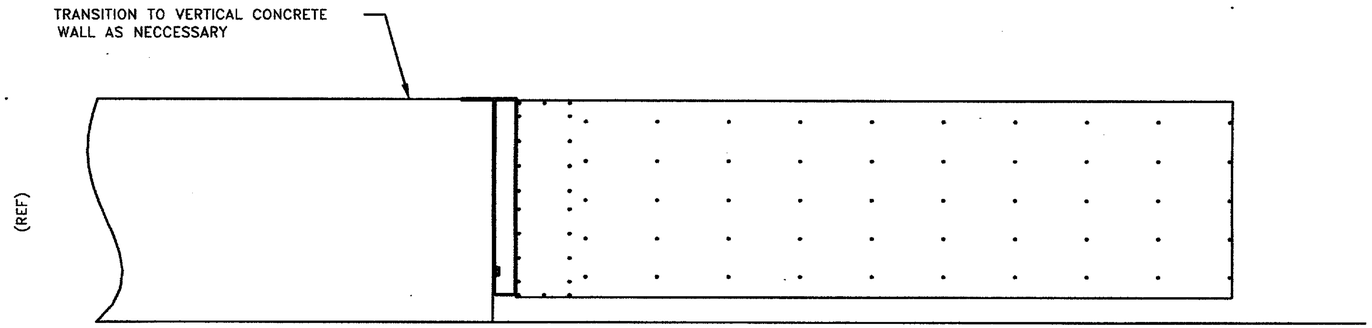

ELEVATION

NOTES:

1. IN COMPLIANCE WITH THE AASHTO CURRENT EDITION ROADSIDE DESIGN GUIDE, MANUFACTURER RECOMMENDS REMOVAL OF ALL CURBS AND ISLANDS TO ENSURE PROPER IMPACT PERFORMANCE.
2. SEE THE "N-E-A-T PRODUCT MANUAL" FOR A DESCRIPTION OF ITS IMPACT PERFORMANCE CHARACTERISTICS AND DESIGN LIMITATIONS BEFORE PLACING A SYSTEM AT A GIVEN SITE. INFORMATION AND ADDITIONAL COPIES OF ABOVE MANUAL ARE AVAILABLE BY CALLING CUSTOMER SERVICE DEPARTMENT AT (312) 467-6750.
3. N-E-A-T SYSTEMS ARE NOT RECOMMENDED FOR SITES WHERE REDIRECTIVE CAPABILITIES ARE WARRANTED.

NO.	DATE	REV. BY	DESCRIPTION

REVISIONS (OR CHANGE NOTICES)

NEW MEXICO
DEPARTMENT OF TRANSPORTATION
STANDARD DRAWING

WORK ZONE ATTENUATOR
NEAT TL-2

APPROVED _____ 4-25-08
DESIGN ENGINEER DATE

DESIGNED BY___ DRAWN BY ___ CHECKED BY___

720-10-2/3

SINGLE POST INSTALLATION

(TOTAL SIGN AREA NOT TO EXCEED 10.5 SQ. FT.)

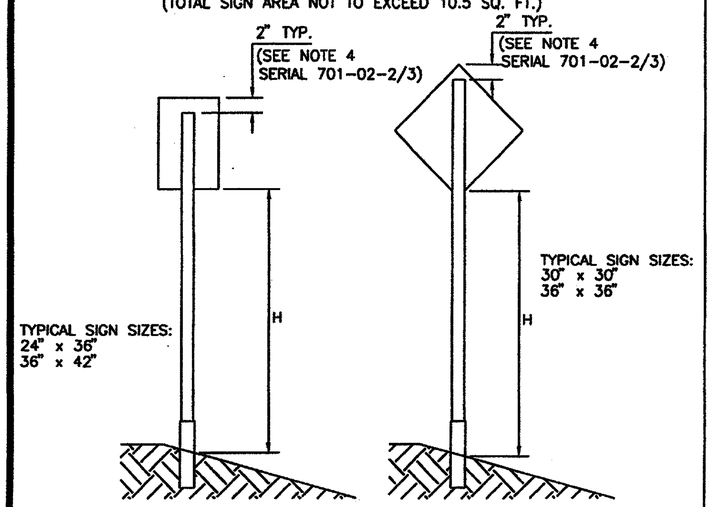

SIGN POST REQUIREMENTS

(SEE NOTES 1 & 3, SHT. 701-02-2/3)

POST TYPE	POST SIZE	MAX. CLEAR HEIGHT, H (FT.)	MAX. SIGN AREA (SQ. FT.)
SQUARE TUBING	1.75" X 1.75" (12 GA.)	9	5
SQUARE TUBING	1.75" X 1.75" (12 GA.)	8	6
SQUARE TUBING	1.75" X 1.75" (12 GA.)	7	7
SQUARE TUBING	2.00" X 2.00" (12 GA.)	9	8
SQUARE TUBING	2.00" X 2.00" (12 GA.)	8	9
SQUARE TUBING	2.00" X 2.00" (12 GA.)	7	10
SQUARE TUBING	2.25" X 2.25" (12 GA.)	9	10.5
SQUARE TUBING	2.25" X 2.25" (12 GA.)	10	10.5

DOUBLE POST INSTALLATION

(TOTAL SIGN AREA NOT TO EXCEED 30 SQ. FT.)
(EXCEPT FOR SLIP BASE SYSTEMS.)

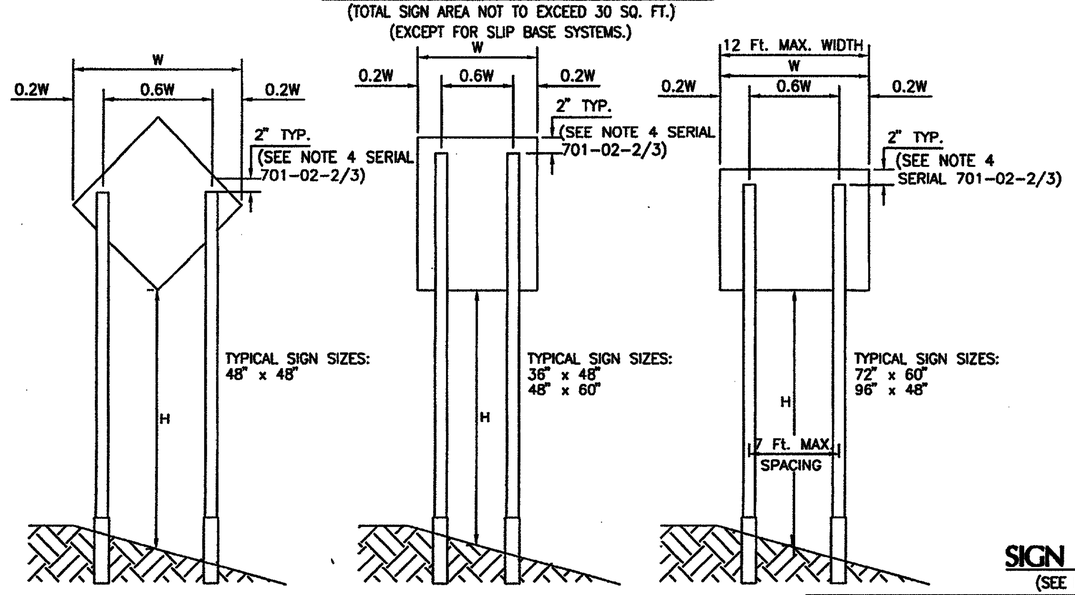

* APPROVED SLIP BASE REQUIRED WITH THIS INSTALLATION
SEE MULTI-DIRECTIONAL SLIP BASE
ASSEMBLY DETAILS (SERIAL 701-02-3/3)
SEE NOTE 12 SERIAL (701-02-2/3)

SIGN POST REQUIREMENTS

(SEE NOTES 1 & 2, SERIAL 701-02-2/3)

POST TYPE	POST SIZE	MAX. CLEAR HEIGHT, H (FT.)	MAX. SIGN AREA (SQ. FT.)
SQUARE TUBING	2.00" X 2.00" (12 GA.)	11	13
SQUARE TUBING	2.00" X 2.00" (12 GA.)	9	15
SQUARE TUBING	2.00" X 2.00" (12 GA.)	8	16
SQUARE TUBING	2.25" X 2.25" (12 GA.)	7	20
* U-CHANNEL	4 LB./FT.	11	25
* U-CHANNEL	4 LB./FT.	9	30
* SQUARE TUBING	2.50" X 2.50" (10 GA.)	7	36

TRIPLE POST INSTALLATION

(TOTAL SIGN AREA NOT TO EXCEED 50 SQ. FT.)

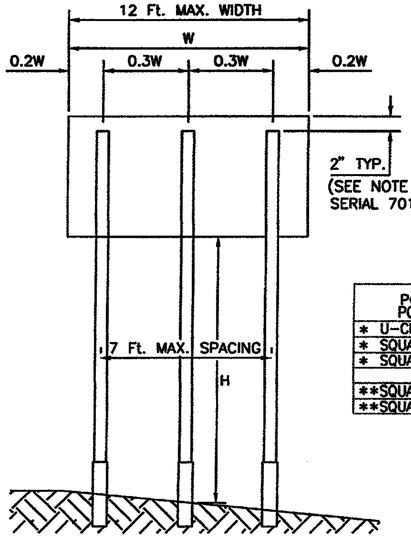

TYPICAL SIGN SIZES:
96" x 60"
108" x 60"
120" x 60"

SIGN POST REQUIREMENTS

(SEE NOTES 1 & 2, SERIAL 701-02-2/3)

POST TYPE POST TYPE	POST SIZE	MAX. CLEAR HEIGHT, H (FT.)	MAX. SIGN AREA (SQ. FT.)
* U-CHANNEL	4 LB./FT.	11	36
* SQUARE TUBING	2.50" X 2.50" (10 GA.)	9	45
* SQUARE TUBING	2.50" X 2.50" (10 GA.)	7	50
**SQUARE TUBING	2.50" X 2.50" (10 GA.)	11	36
**SQUARE TUBING	2.50" X 2.50" (10 GA.)	9	45

* APPROVED SLIP BASE REQUIRED WITH THIS INSTALLATION
SEE MULTI-DIRECTIONAL SLIP BASE
ASSEMBLY DETAILS (SERIAL 701-02-3/3)
SEE NOTE 12 SERIAL (701-02-2/3)

** LAP-SPLICE OR MULTI-DIRECTIONAL SLIP BASE (SERIAL 701-02-3/3 MAY BE USED. SEE NOTE 12 (SERIAL 701-02-2/3.)

BASE POST INSTALLATION DETAILS FOR SQUARE TUBING AND U-CHANNEL SYSTEMS

(SEE SERIAL. 701-02-3/3 FOR MULTI-DIRECTIONAL SLIP BASE SYSTEMS)

* SQUARE TUBING
(SLEEVE BASE)

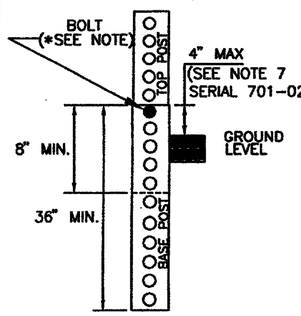

BASE POST FOR SQUARE TUBING TO BE NEXT SIZE LARGER THAN TOP SIGN POST.

* U-CHANNEL
(LAP-SPLICE)

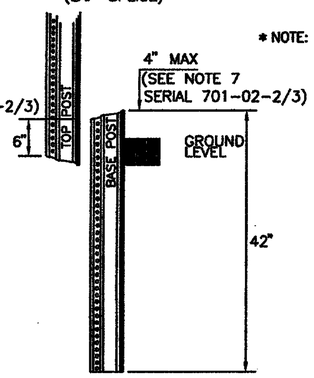

TRAFFIC FLOW

* NOTE: SEE MANUFACTURER'S DRAWINGS FOR SPECIFIC ASSEMBLY INFORMATION (POST TO BASE POST OVERLAP), INCLUDING TYPES OF NUTS, BOLTS, WASHERS, AND OTHER PARTS REQUIRED FOR PRODUCT USE.

NO.	DATE	REV. BY	DESCRIPTION

REVISIONS (OR CHANGE NOTICES)

NEW MEXICO DEPARTMENT OF TRANSPORTATION STANDARD DRAWING

SMALL SIGN SUPPORT INSTALLATION DETAILS

APPROVED _____ DESIGN ENGINEER 1-11-05 DATE

DESIGNED BY___ DRAWN BY ___ CHECKED BY ___

701-02-1/3 SHEET 1 OF 3

HORIZONTAL AND VERTICAL CLEARANCES

(SEE NOTE 9)

FREEWAYS/EXPRESSWAYS & RURAL AREAS

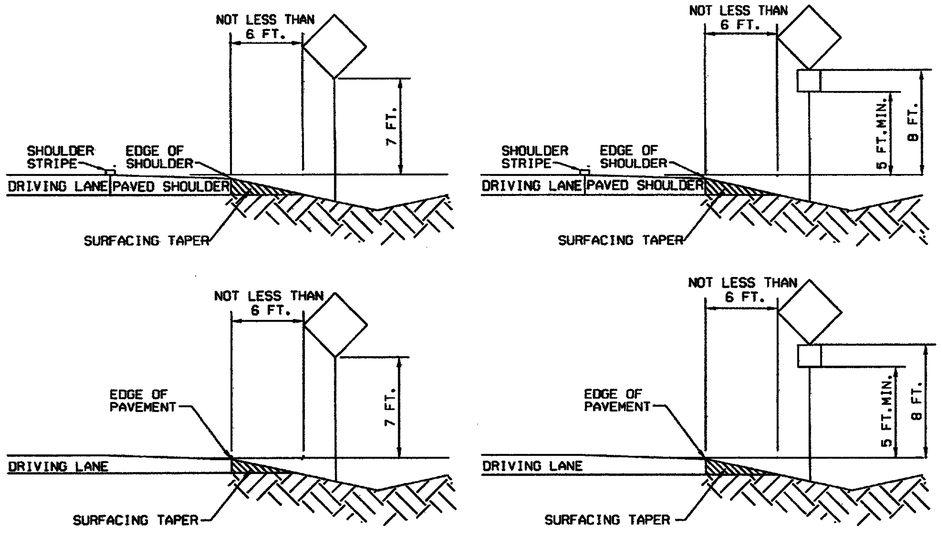

URBAN (BUSINESS, COMMERCIAL, & RESIDENTIAL AREAS)
CONSTRUCTION ZONES IN URBAN AREAS

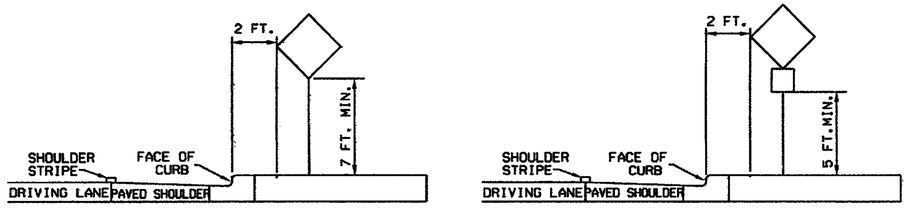

CONSTRUCTION ZONES IN FREEWAYS/EXPRESSWAYS AND RURAL AREAS

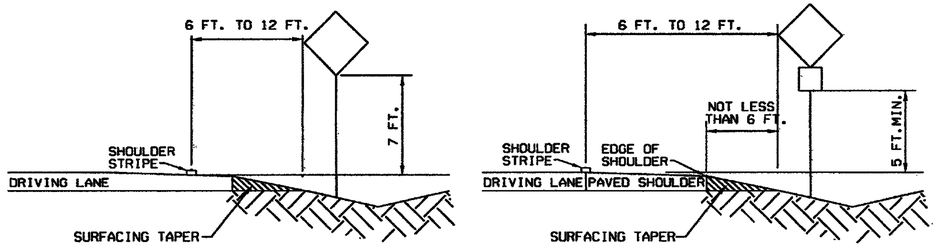

GENERAL NOTES:

1. ALL SQUARE TUBING SIGN POST REQUIREMENTS ARE BASED ON A 10 OR 12 GAUGE THICKNESS, ASTM A570 GRADE 50 STEEL, A MINIMUM YIELD STRENGTH OF 60,000 PSI AND A 70 MPH WIND LOAD. ALL U-CHANNEL SIGN POSTS REQUIREMENTS ARE BASED ON A MINIMUM YIELD STRENGTH OF 80,000 PSI AND 85 MPH WIND LOAD. SEE THE MUTCD & STANDARD HIGHWAY SIGNS MANUAL (CURRENT EDITION) FOR FURTHER GUIDANCE.
2. FOR CONSTRUCTION SIGNING & PERMANENT SINGLE AND TRIPLE POST INSTALLATIONS, SMALLER POST CROSS SECTIONS MAY BE USED IN ACCORDANCE WITH MANUFACTURER'S RECOMMENDATIONS AND THE RECOMMENDATIONS DETAILED IN NOTE 1.
3. TOP EDGE OF POSTS SHALL NOT EXTEND PAST TOP EDGE OF SIGN.
4. STEEL POSTS, BASE POSTS, AND SLIP BASES FOR ALUMINUM PANEL SIGNS SHALL BE SELECTED FROM THE DEPARTMENT'S APPROVED PRODUCT LIST. ALL SIGNS MOUNTED WITHIN THE CLEAR ZONE SHALL BE MOUNTED ON A NCHRP REPORT 350 APPROVED SIGN POST/BASE POST BREAKAWAY SYSTEM UNLESS INSTALLATION IS LOCATED BEHIND A NON-GATING LONGITUDINAL BARRIER. OTHER INSTALLATIONS, CONFIGURATIONS OR SYSTEMS NOT SHOWN MAY BE USED AS RECOMMENDED BY THE MANUFACTURER WITH APPROVAL OF THE DISTRICT TRAFFIC ENGINEER.
5. FOR INSTALLATIONS ON WEAK (SOFT) SOIL, SOIL PLATES SHALL BE USED AS RECOMMENDED BY THE MANUFACTURER. PAYMENT FOR SOIL PLATES SHALL BE INCIDENTAL TO THE SIGN INSTALLATION.
6. BASE POSTS SHALL NOT EXTEND MORE THAN 4" ABOVE GROUND LEVEL AND SHALL BE OF THE SAME WEIGHT/GAUGE AND TYPE AS THE SIGN POST.
7. INTERMIXING OF U-CHANNEL AND SQUARE TUBING POSTS, POSTS OF DIFFERENT WEIGHTS/GAUGES OR PRODUCT BRANDS IS NOT ALLOWED EXCEPT WHERE RECOMMENDED BY THE MANUFACTURER.
8. HORIZONTAL CLEARANCES APPLY TO INSTALLATIONS ON LEFT AND RIGHT SIDE OF ROADWAY.
9. SUPPLEMENTAL SIGNS SHALL NOT BE ATTACHED DIRECTLY TO PRIMARY PANELS ON EITHER PERMANENT OR CONSTRUCTION SIGNING INSTALLATIONS.
10. SPACING BETWEEN SUPPLEMENTAL PANELS AND PRIMARY PANELS SHALL NOT EXCEED 6".
11. SIGN PANELS PLACED PARALLEL TO TRAFFIC SHALL BE MOUNTED ON A MULTI-DIRECTIONAL BREAKAWAY SYSTEM. (SEE SERIAL 701-02-3/3)

NO.	DATE	REV. BY	DESCRIPTION

REVISIONS (OR CHANGE NOTICES)

NEW MEXICO
DEPARTMENT OF TRANSPORTATION
STANDARD DRAWING

SMALL SIGN SUPPORT
INSTALLATION DETAILS

APPROVED _____ DESIGN ENGINEER 2-3-01 DATE

DESIGNED BY___ DRAWN BY___ CHECKED BY___

701-02-2/3 SHEET 2 OF 3

MULTI-DIRECTIONAL SLIP BASE DETAILS

SEE APPROVED PRODUCT LIST FOR APPROVED EQUALS.

SQUARE TUBING SLIP BASE

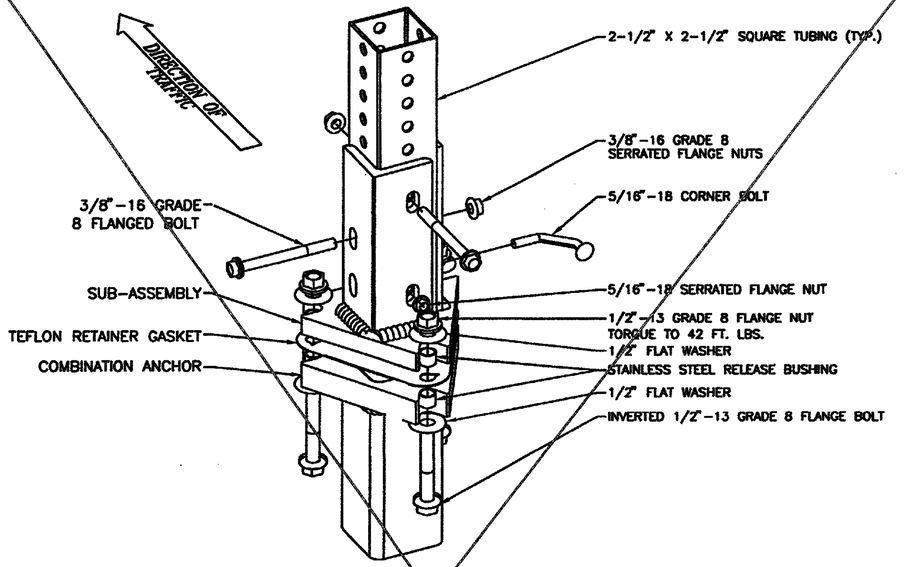

DETAIL "A"-CONCRETE ANCHOR

(NOT TO EXCEED 4" ABOVE GROUND LEVEL)

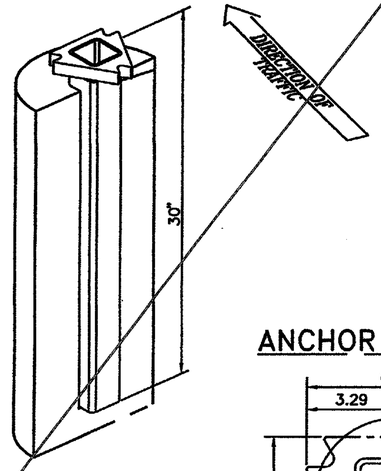

DETAIL "B"-SOIL ANCHOR

(NOT TO EXCEED 4" ABOVE GROUND LEVEL)

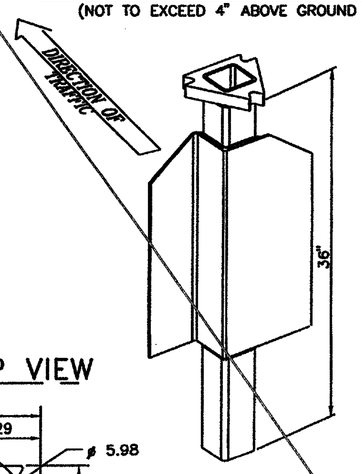

ANCHOR TOP VIEW

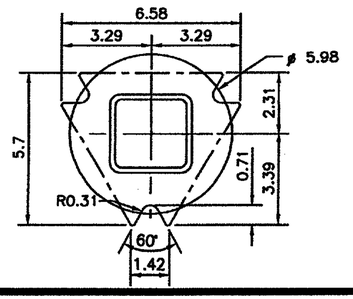

NOTES:

1. CONCRETE SHOULD BE A MINIMUM OF 12" IN DIAMETER AND 30" DEEP.
2. CLASS "A" CONCRETE SHALL BE USED. THE COST SHALL BE INCIDENTAL TO THE PRICE OF STEEL POSTS & BASE POSTS FOR ALUMINUM PANEL SIGNS.

U-CHANNEL SLIP BASE

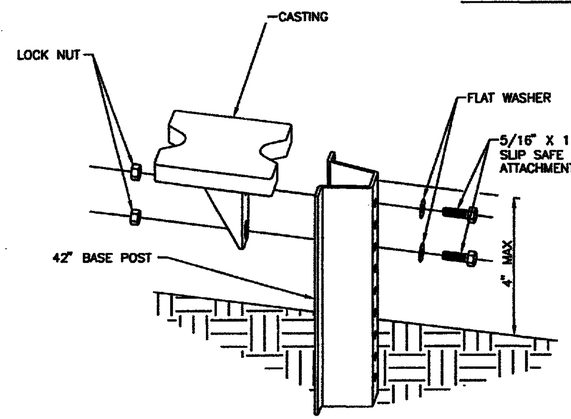

NOTE: BOLTS SHOULD BE TIGHTENED 1/2 TO 3/4 TURN AFTER SNUG.

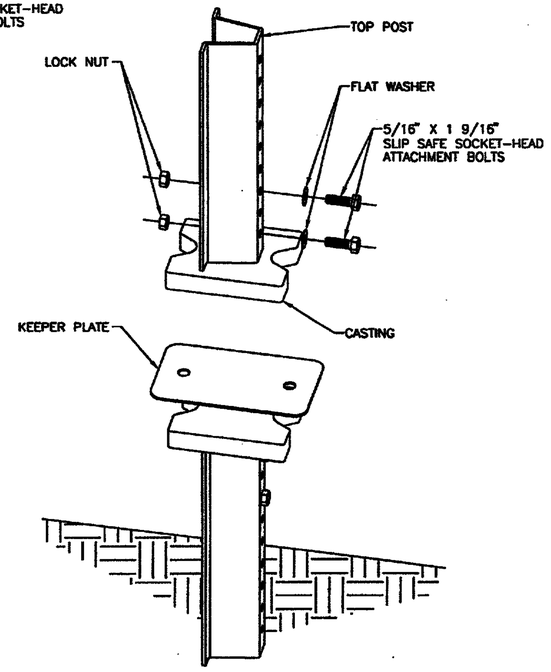

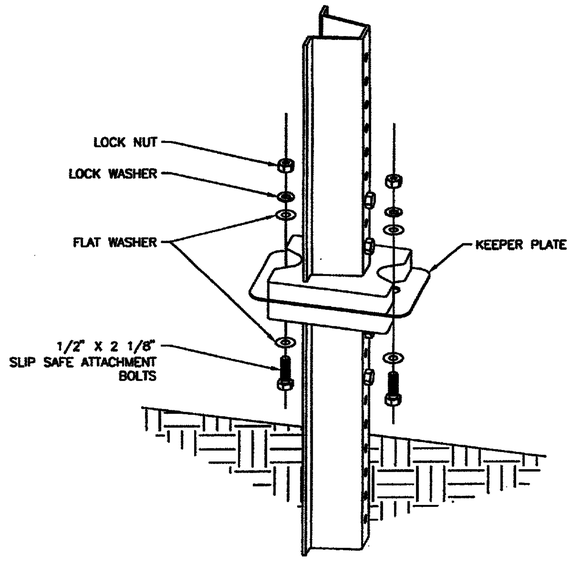

NOTE: TIGHTEN NUT 1/3 TO 1/2 TURN AFTER SNUG.

NO.	DATE	REV. BY	DESCRIPTION

REVISIONS (OR CHANGE NOTICES)

NEW MEXICO DEPARTMENT OF TRANSPORTATION STANDARD DRAWING

MULTI-DIRECTIONAL SLIP BASE POST DETAILS

APPROVED _____ DESIGN ENGINEER _____ DATE 1-11-05

DESIGNED BY___ DRAWN BY ___ CHECKED BY ___

701-02-3/3 SHEET 3 OF 3

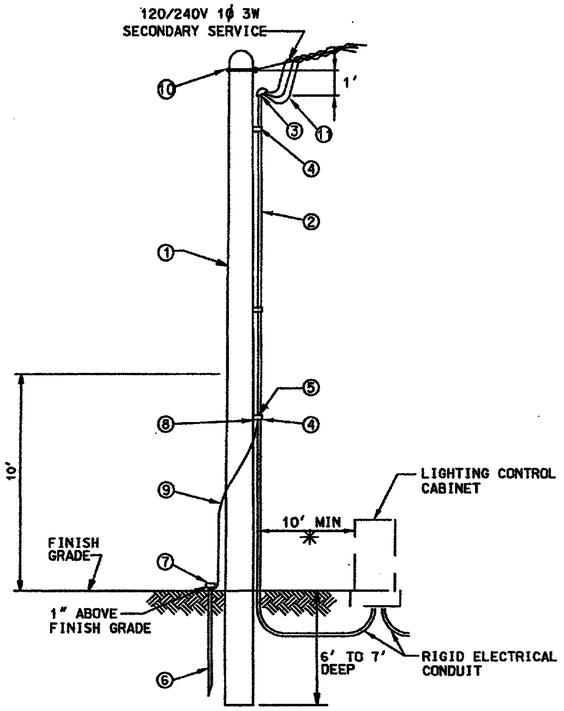

MATERIAL LIST

①	1	25' TREATED POLE
②	30'	2" GALVANIZED CONDUIT
③	1	2" WEATHER HEAD
④	2	UNIVERSAL SUPPORT BRACKET
⑤	2	2" PIPE STRAP KIT
⑥	1	COPPERWELD 3/4"x10'-0" GROUND ROD
⑦	1	GROUND ROD CLAMP
⑧	1	GROUND LUG
⑨	10'	#6 BARE COPPER GROUND WIRE
⑩	1	5/8" EYE BOLT
⑪	40' I/C #2 THW BLACK 40' I/C #2 THW WHITE 40' I/C #2 THW RED	100 AMP
OR		
⑪	40' I/C 3/0 THW BLACK 40' I/C 3/0 THW WHITE 40' I/C 3/0 THW RED	200 AMP

SERVICE POLE (LIGHTING)

*CONDUIT AND WIRE EXTENDING MORE THAN 10' FROM POLE WILL BE MEASURED AND PAID PER ACTUAL FOOTAGE USED.

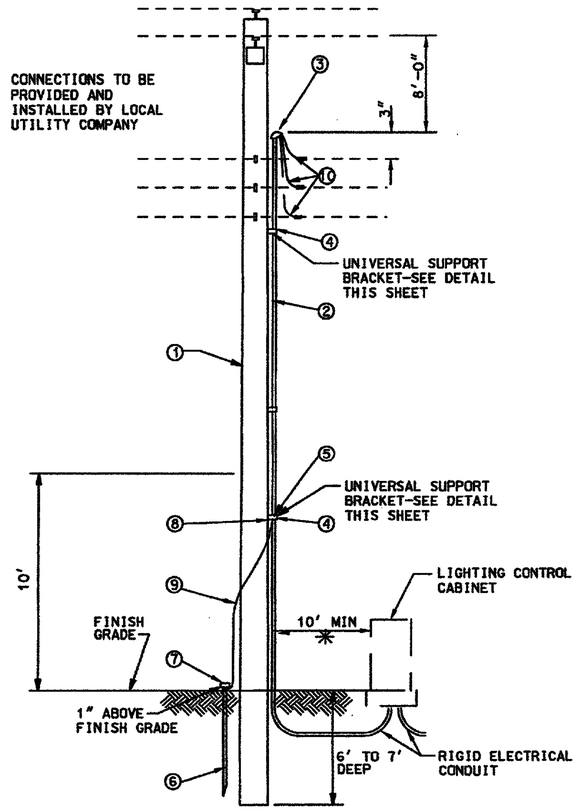

MATERIAL LIST

①	1	EXISTING POLE
②	40'	2" GALVANIZED CONDUIT
③	1	2" WEATHER HEAD
④	2	UNIVERSAL SUPPORT BRACKET
⑤	2	2" PIPE STRAP KIT
⑥	1	COPPERWELD 3/4"x10'-0" GROUND ROD
⑦	1	GROUND ROD CLAMP
⑧	1	GROUND LUG
⑨	10'	#6 BARE COPPER GROUND WIRE
⑩	50' I/C #2 THW BLACK 50' I/C #2 THW WHITE 50' I/C #2 THW RED	100 AMP
OR		
⑩	50' I/C 3/0 THW BLACK 50' I/C 3/0 THW WHITE 50' I/C 3/0 THW RED	200 AMP

SERVICE RISER (LIGHTING)

*CONDUIT AND WIRE EXTENDING MORE THAN 10' FROM POLE WILL BE MEASURED AND PAID PER ACTUAL FOOTAGE USED

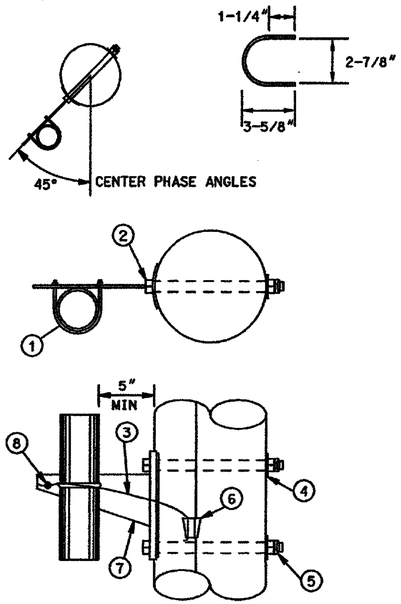

MATERIAL LIST

①	1	U BOLT
②	2	5/8" MACHINE BOLTS
③	3'	#4 SOLID COPPER WIRE
④	2	2-1/4" SQUARE WASHER
⑤	2	5/8" MF LOCK NUT
⑥	1	LINE TAP
⑦	1	SUPPORT BRACKET
⑧	1	GROUNDING LUG

UNIVERSAL SUPPORT BRACKETS NOTES:

1. BRACKET TO BE FASTENED TO POLE WITH 5/8" GALVANIZED MACHINE BOLTS.
2. BRACKET SUITABLE FOR TWO 2" CONDUITS.
3. TWO HOLE STRAPS ATTACHED AT 30" INTERVALS WITH 2" LAG SCREWS MAY BE USED INSTEAD OF THE SUPPORT BRACKET WHEN THE CONDUIT IS 1" OR LESS. A MAXIMUM OF TWO CONDUITS MAY BE STRAPPED DIRECTLY TO THE POLE.

UNIVERSAL SUPPORT BRACKETS

LIGHTING ELECTRICAL SERVICE NOTES

1. ALL SERVICE DETAILS, MATERIALS, & INSTALLATION SHALL CONFORM TO THE LOCAL POWER COMPANY REQUIREMENTS.
2. CONTACT LOCAL POWER COMPANY CUSTOMER SERVICES FOR POLE QUADRANT FOR RISERS.
3. ALL ABOVE GRADE CONDUIT SHALL BE GALVANIZED.
4. RISER BRACKET ASSEMBLY MUST BE GROUNDED PER LOCAL POWER COMPANY REQUIREMENTS.
5. CONDUIT AND WIRE EXTENDING MORE THAN 10' FROM POLE WILL BE MEASURED AND PAID PER ACTUAL FOOTAGE USED.
6. UNIVERSAL SUPPORT BRACKETS WILL BE CONSIDERED INCIDENTAL TO THE SERVICE RISER.
7. DRILLING HOLES IN EXISTING STEEL POLES FOR UNIVERSAL SUPPORT BRACKETS WILL NOT BE PERMITTED UNLESS OTHERWISE APPROVED BY THE LOCAL POWER COMPANY. BRACKETS SHALL BE MOUNTED ON STEEL POLES WITH STAINLESS STEEL BANDS.

NO.	DATE	REV. BY	DESCRIPTION

REVISIONS (OR CHANGE NOTICES)

NEW MEXICO
DEPARTMENT OF TRANSPORTATION
STANDARD DRAWING

ROADWAY LIGHTING ELECTRICAL SERVICE DETAILS

APPROVED _____ DESIGN ENGINEER 12-22-04 DATE

DESIGNED BY___ DRAWN BY___ CHECKED BY___

706L-02-1/1

GENERAL NOTES

1. DESIGN CONFORMS TO 2009 (6TH EDITION) AASHTO STANDARD SPECIFICATIONS FOR STRUCTURAL SUPPORTS FOR HIGHWAY SIGNS, LUMINAIRES AND TRAFFIC SIGNALS.

2. DESIGN CRITERIA

   REFERENCE INTERVAL = 50 YRS.
   SERVICE LIFE = 50 YRS.
   DESIGN WIND SPEED = 90 MPH
   GUST EFFECT FACTOR = 1.14

   MAXIMUM NUMBER OF LUMINAIRES IS FIVE (5) PER ARM. MAXIMUM WEIGHT OF EACH LUMINAIRE IS 44 LBS. WITH AN EFFECTIVE PROJECTED AREA OF 1.44 SF.

   MAXIMUM ALLOWABLE DEFLECTION AT DESIGN WIND SPEED IS 4% OF POLE HEIGHT.

3. WORKMANSHIP AND MATERIALS SHALL CONFORM TO NEW MEXICO DEPARTMENT OF TRANSPORTATION (NMDOT) STANDARD SPECIFICATIONS FOR HIGHWAY AND BRIDGE CONSTRUCTION (CURRENT EDITION). CONTRACTOR SHALL CONTACT NMDOT FOR APPROVED EQUIPMENT LISTING.

4. POLE & BASE SHROUD OR SINGLE PIECE TAPER SECTIONS (WHERE AS INDICATED ON THE TABLE OF VARIABLE POLE DIMENSIONS). MULTI-PIECE SECTIONS WILL BE PERMITTED AS AN ALTERNATE DESIGN. SEE NOTE 10 FOR ALTERNATE DESIGN REQUIREMENTS.

5. MATERIALS

   A. STEEL POLES AND ARMS SHALL BE ASTM A 595 GR. B MINIMUM YIELD STRENGTH AFTER FABRICATION.

   B. ALUMINUM POLES AND ARMS SHALL BE FABRICATED FROM BILLET 6 ALLOY TUBE MATERIALS CONFORMING TO ASTM B 241. ALLOY 6063 IS TO BE FURNISHED IN T6 CONDITION AND HEAT TREATED IN ACCORDANCE WITH ASTM B 241.

   C. ALUMINUM POLES AND ARMS SHALL BE FURNISHED WITH A 50 GRIT SATIN BRUSHED FINISH.

   D. STEEL BASE PLATE AND ANCHOR BOLT TEMPLATES SHALL BE HOT ROLLED FROM A 36. ALUMINUM POLE BASES SHALL BE CAST FROM 356 ALLOY IN ACCORDANCE WITH ASTM B26 OR B108.

   E. ANCHOR BOLTS AND ASSOCIATED HARDWARE SHALL BE OF HIGH STRENGTH M 314 (ASTM F 1554), GRADE 55. EACH BOLT SHALL BE FURNISHED WITH A MINIMUM OF THREE HEAVY HEX NUTS AND TWO FLAT WASHERS. BOLT, NUT AND WASHER SHALL BE SUPPLIED WITH ASTM A 563 GRADE DH NUTS AND ASTM F 436 HARDENED FLAT WASHERS (TYPE 1 ASTM F 436).

   F. PRELOAD NUTS SHALL BE BOLT TYPE AND DIAMETER SPECIFIC (HEAVY HEX ASTM A563 GR DH FOR ASTM F1554 GR 55 BOLTS OR ASTM A194 GR 2H FOR ASTM A 325).

   G. POLE CONNECTION BOLT SHALL BE A 325 (1.5" DIAMETER MAXIMUM) OR A 490 (1" DIAMETER MAXIMUM).

6. GALVANIZING

   A. POLES AND PLATES SHALL BE GALVANIZED PER AASHTO M 111 #4 (ASTM A 123).

   B. HARDWARE AND ANCHOR BOLTS SHALL BE HOT-DIPPED GALVANIZED PER AASHTO M 232 M (ASTM A 153).

7. WELDS

   A. ALL FABRICATORS SHALL BE CERTIFIED UNDER NMDOT SPECIFICATION SECTION 541.3 "CERTIFICATION OF STEEL FABRICATORS", AND SHALL CONFORM TO SECTION 539 "SIGNAL AND LIGHTING STANDARDS" OF THE CURRENT NEW MEXICO DEPARTMENT OF TRANSPORTATION (NMDOT) STANDARD SPECIFICATIONS AND SPECIAL PROVISIONS TO MEET THE DATA SHOWN ON THESE DRAWINGS.

   B. STEEL WELDING SHALL CONFORM TO THE LATEST EDITION OF THE STRUCTURAL WELDING CODE (ANSI/AWS D1.1).

   C. ALUMINUM WELDING SHALL CONFORM TO AMERICAN WELDING SOCIETY STRUCTURAL WELDING CODE (ALUMINUM) ANSI/AWS D1.2 (CURRENT EDITION).

8. POLES, ARMS AND FITTINGS SHALL BE FREE OF INTERNAL AND EXTERNAL PROTRUSIONS WHICH WOULD INTERFERE WITH WIRES OR THE PROPER OPERATION OF ANY OTHER ELECTRICAL COMPONENT.

9. THE FABRICATOR/FABRICATOR SHALL FURNISH FOUR (4) SETS OF SHOP DRAWINGS OF ALL SUPPORT STRUCTURE COMPONENTS FOR THE TYPE V LIGHTING STANDARD TO THE STATE BRIDGE ENGINEER FOR APPROVAL. SHOP DRAWINGS SHALL COVER ALL PARTS REQUIRED FOR THE INSTALLATION. THE CONTRACTOR SHALL FURNISH AN APPROPRIATE CERTIFICATION OF COMPLIANCE WITH ALL DESIGN REQUIREMENTS. THE FABRICATOR'S CERTIFICATION SHALL APPEAR ON THE DRAWINGS. THE FOUNDATION MUST RECEIVE WRITTEN APPROVAL OF THE SHOP DRAWINGS FROM THE ENGINEER PRIOR TO BEGINNING FABRICATION OR ASSEMBLY OF PARTS.

10. THE INFORMATION AND DETAILS PROVIDED FOR POLES, ARMS, ANCHOR BOLTS, HANDHOLE AND FOUNDATIONS IN THESE STANDARDS ARE MINIMUM REQUIREMENTS. DESIGN AND DETAILS FOR ALTERNATE LUMINAIRE AND OTHER LUMINAIRE SUPPORT STRUCTURE COMPONENT PLANS IS PROVIDED BY CONTRACTOR/FABRICATOR IN CONFORMANCE WITH THE AASHTO STANDARD SPECIFICATIONS FOR STRUCTURAL SUPPORTS FOR HIGHWAY SIGNS, LUMINAIRES, AND TRAFFIC SIGNALS, 5TH EDITION WITH 2010 AND 2011 INTERIMS AND ALL OTHER ENGINEERING STRUCTURAL AND MECHANICAL SPECIFICATIONS.

11. WELDING SHALL BE IN ACCORDANCE WITH SECTION 539 OF THE STANDARD SPECIFICATIONS.

12. SHOP DRAWINGS ARE FOR STEEL POLES ONLY. NOTE: ALTERNATE ALTERNATE APPROVED ALUMINUM POLE ASSEMBLIES MAY BE USED. ALUMINUM ARMS MAY BE EITHER AS APPROVED ALUMINUM BASE OR BREAKAWAY TYPE, NOT WHICH WILL BE INDICATED IN PLANS. (SEE THE STANDARD).

13. STRUCTURAL REQUIREMENTS SHOWN ON TABLES AND DETAILS IN THESE PLANS SHALL APPLY TO BOTH SINGLE AND DOUBLE ARM CONFIGURATIONS.

14. CONTRACTOR SHALL PROVIDE COPIES OF ALL TYPE V LIGHTING SYSTEM TECHNICAL DATA, CALCULATIONS, SHOP DRAWINGS, AND LUMINAIRE TYPE INFORMATION TO THE LOCAL MAINTAINING AGENCY AND THE LOCAL POWER COMPANY.

15. THE DESIGN PROVIDED FOR THIS STANDARD MUST BE RE-EVALUATED FOR POLES LOCATED IN ELEVATED REGIONS AND POLES LOCATED IN SPECIAL WIND REGIONS EXCEEDING THE DESIGN CRITERIA PROVIDED IN THESE STANDARDS.

16. DRAWINGS SHALL BE PER MANUFACTURER RECOMMENDATION AND SHALL BE SHOWN WITH SHOP DRAWINGS.

17. ALL DESIGNS SUBMITTED FOR APPROVAL MUST BE SIGNED AND SEALED BY A LICENSED ENGINEER IN THE STATE OF NEW MEXICO.

18. REFER TO THE CURRENT NMDOT APPROVED PRODUCT LIST FOR ACCEPTABLE MANUFACTURERS AND MODELS FOR POLES, LUMINAIRES, BREAKAWAY ASSEMBLIES, AND ORNAMENTAL LIGHTING COMPONENTS.

NEW MEXICO 19258 PROFESSIONAL ENGINEER

NO.	BY	REVISIONS

NEW MEXICO DEPARTMENT OF TRANSPORTATION STANDARD DRAWING

ROADWAY LIGHTING
SUPPORT STRUCTURES
TYPE V

GENERAL NOTES

DESIGNED BY: J.M. DRAWN BY: E.C. CHECKED BY: J.M.

707L-07-1/11

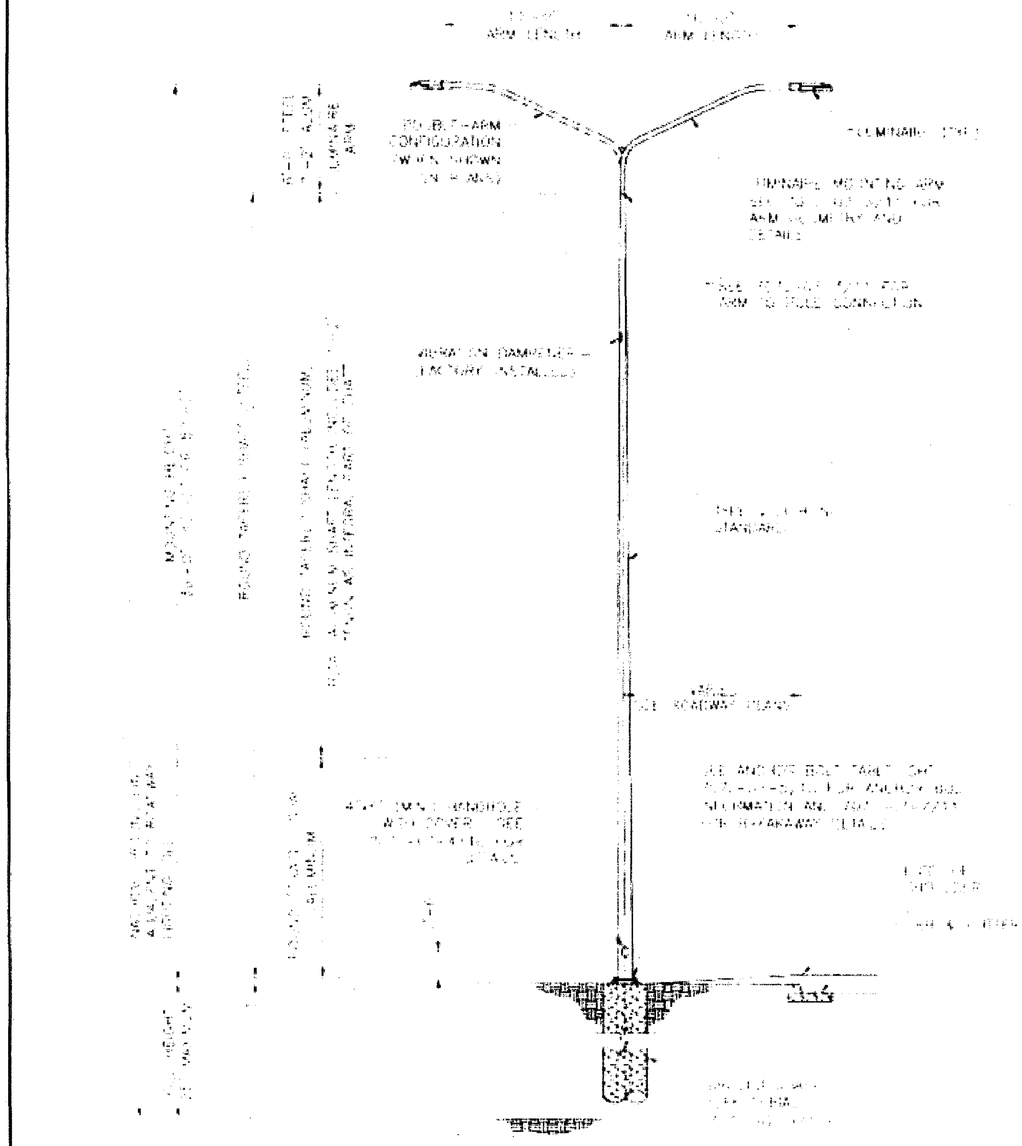

ROADWAY LIGHTING TYPE V POLE ELEVATION

TABLE OF VARIABLE POLE DIMENSIONS (STEEL)						
MOUNTING HEIGHT	ARM CONFIGURATION	MAXIMUM SHAFT LENGTH	HALF OF TAPER (IN/FT)	OUTSIDE DIAMETER (IN)		MIN SHAFT SECTION THICKNESS (IN)
				BOTTOM	TOP	
30'-0"	SINGLE	29'-9"	0.14	6.825	3.50	0.125
	DOUBLE					0.125
40'-0"	SINGLE	39'-9"	0.14	8.225	3.50	0.125
	DOUBLE					0.125
50'-0"	SINGLE	49'-9"	0.14	9.625	3.50	0.175
	DOUBLE					0.175

TABLE OF VARIABLE POLE DIMENSIONS (ALUMINUM)						
MOUNTING HEIGHT	ARM CONFIGURATION	MAX TAPERED SHAFT LENGTH*	TOTAL SHAFT LENGTH*	OUTSIDE DIAMETER (IN)		MIN SHAFT SECTION THICKNESS (IN)
				BOTTOM	TOP	
30'-0"	SINGLE	29'-9"	29'-9"	6.00	4.50	0.156
	DOUBLE					0.188
40'-0"	SINGLE	39'-9"	39'-9"	8.00	4.50	0.219
	DOUBLE					0.313
50'-0"	SINGLE	49'-9"	49'-9"	10.00	4.50	0.188
	DOUBLE					0.250

SERVICE LOADS AT TOP OF DRILLED SHAFT				
MOUNTING HEIGHT	AXIAL "P"	SHEAR "V"	MOMENT "M"	TORSION "T"
	(KIP)	(KIP)	(KIP-FT)	(KIP-FT)
30'	0.93	1.68	35.6	1.84
40'	1.18	1.84	58.9	1.92
50'	1.38	1.97	81.8	1.96
BREAKAWAY	0.39	1.74	21.66	0.35

NEW MEXICO
DEPARTMENT OF TRANSPORTATION
STANDARD DRAWING

ROADWAY LIGHTING
SUPPORT STRUCTURES
TYPE V

POLE ELEVATION AND DIMENSIONS

707L-07-2/11

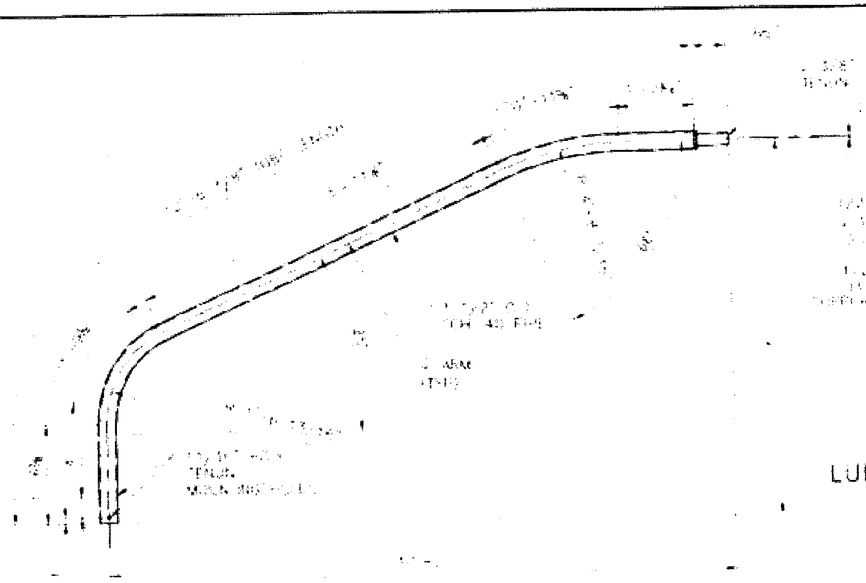

LUMINAIRE SUPPORT ARM GEOMETRY (STEEL)

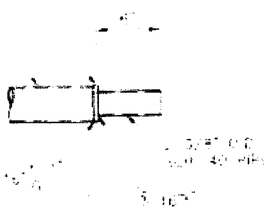

LUMINAIRE TENON (STEEL)

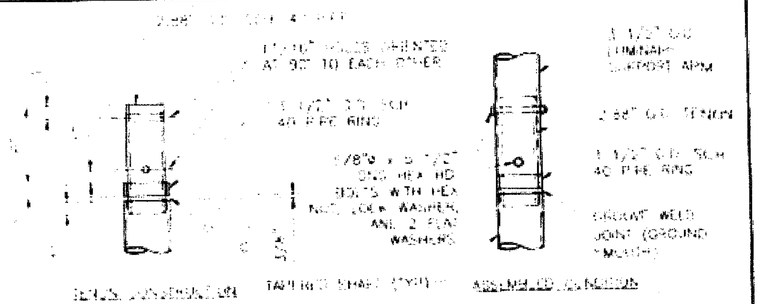

POLE TENON (STEEL)

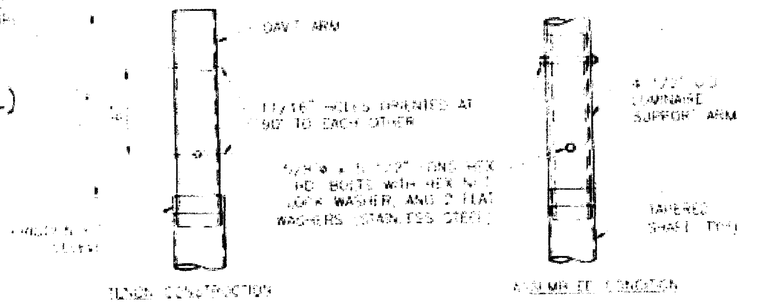

POLE TENON (ALUMINUM)

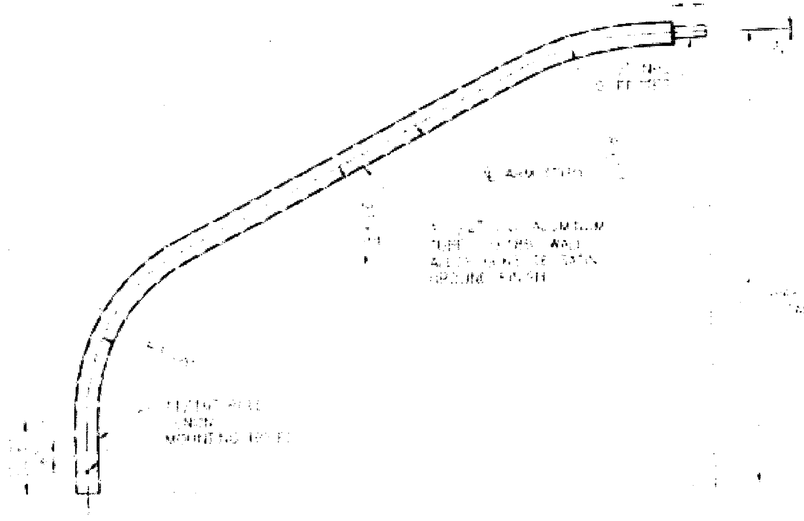

LUMINAIRE SUPPORT ARM GEOMETRY (ALUMINUM)

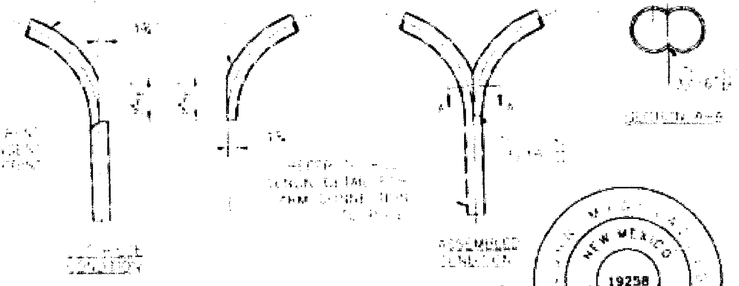

DOUBLE ARM SPLICE (STEEL)

NEW MEXICO
DEPARTMENT OF TRANSPORTATION
STANDARD DRAWING

ROADWAY LIGHTING
SUPPORT STRUCTURES
TYPE V

ARM AND TENON DETAILS

707L-07-3/11

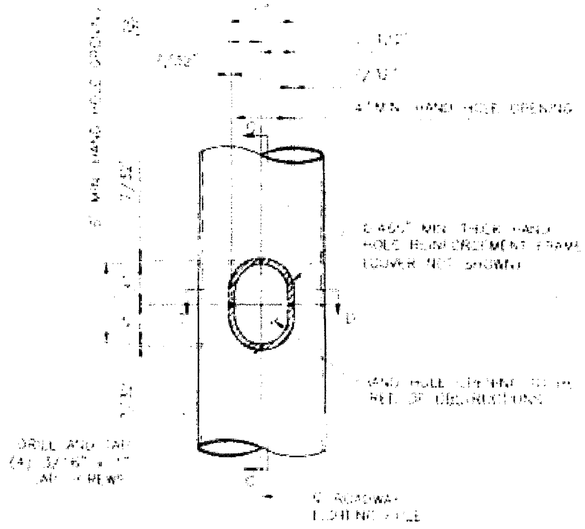

HAND HOLE DETAIL
NOT TO SCALE

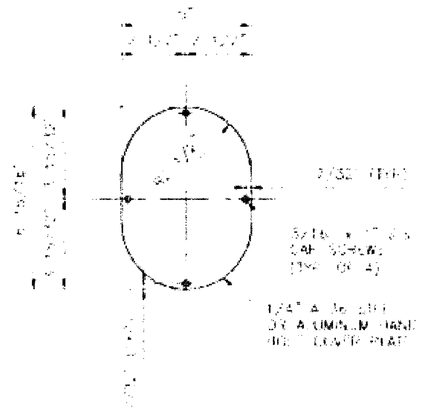

HAND HOLE COVER
NOT TO SCALE

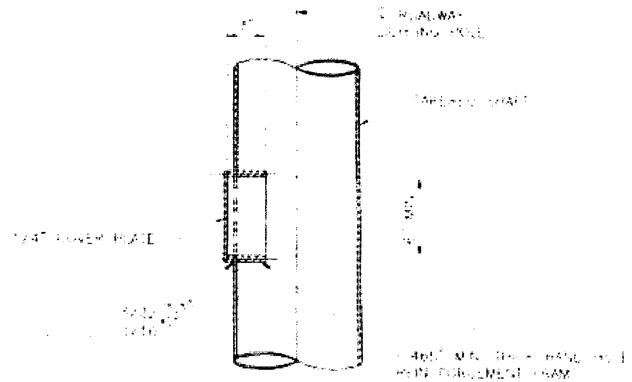

SECTION C-C
NOT TO SCALE

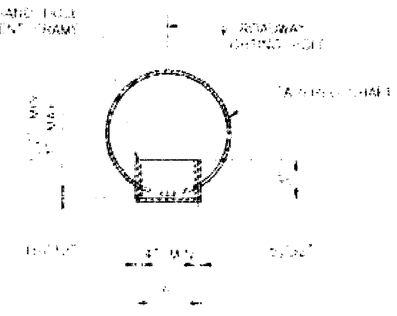

SECTION D-D
NOT TO SCALE

GENERAL NOTES

1. HANDHOLES SHALL BE FREE OF INTERNAL AND EXTERNAL OBSTRUCTIONS WHICH WOULD DAMAGE OR INTERFERE WITH WIRES OR THE PROPER OPERATION OF ANY OTHER ELECTRICAL COMPONENT.

2. HAND HOLE COVER SHALL BE FABRICATED FROM 1/4" A 36 STEEL (STEEL POLE), ALLOY 5083-T6 (ALUMINUM POLE) PLATE OR MAY BE HINGED WITH A SUITABLE METHOD OF CLOSURE.

3. HAND HOLE REINFORCEMENT FRAME SHALL BE FABRICATED W H ANY OF THE FOLLOWING METHODS:

   A. FABRICATED 5" O.D. x 1/2" WALL PIPES, ASTM A 53, GRADE B (STEEL POLE).
   B. FORGED FROM STEEL CONFORMING TO ASTM A 572, GRADE 50Z (STEEL POLE).
   C. FABRICATED FROM 15/32" MINIMUM WALL TUBING CONFORMING TO ASTM A 36 (STEEL POLE).
   D. CAST FROM STEEL CONFORMING TO ASTM A 27, GRADE 65-35 (STEEL POLE).
   E. FABRICATED FROM 15/32" MINIMUM WALL TUBING, ALLOY 356-T6 (ALUMINUM POLE).

4. HAND HOLE REINFORCING FRAMES AND TENON COMPONENTS SHALL BE WELDED TO THE POLES AND ARMS PRIOR TO GALVANIZING THE ASSEMBLIES.

5. STEEL HAND HOLE COVER PLATES SHALL BE GALVANIZED PER ASTM A 123.

6. LOCATIONAL LOCATIONS OF HOLES FOR CAP SCREWS IN HAND HOLE COVER PLATES WITH CONSTRUCTION OF HAND HOLE REINFORCING FRAME. TAPPED HOLES SHALL BE CENTERED IN REINFORCING FRAME RING.

7. HAND HOLES SHALL BE ORIENTED DOWNSTREAM OF ONCOMING TRAFFIC.

8. IF HAND HOLE FABRICATION DETAILS OTHER THAN THOSE CITED HEREIN ARE PROPOSED, THE DESIGN SHALL ENSURE THAT SUCH HAND HOLE REINFORCEMENT SHALL STRENGTHEN POLE SHAFT SECTION TO THAT OF A SHAFT FABRICATED WITHOUT A HANDHOLE.

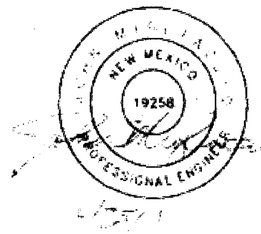

NEW MEXICO DEPARTMENT OF TRANSPORTATION STANDARD DRAWING

ROADWAY LIGHTING SUPPORT STRUCTURES TYPE V

HAND HOLE DETAILS

707L-07-4/11

ANCHOR BOLT AND CAST PLATE TABLE FOR STEEL POLES

MOUNTING HEIGHT	BOLT DIAMETER	BOLT LENGTH	NUMBER OF BOLTS	SLOTTED HOLE SIZE	BASE PLATE OPENING	BOLT CIRCLE DIAMETER	BASE PLATE		BOLT TEMPLATE	
							WIDTH	THICKNESS		
					"A"	"B"	"C"	"D"	G	E
(FT)	(IN)	(IN)		(IN x IN)	(IN)	(IN)	(IN)	(IN)	(IN)	(IN)
50	1.0	56	4	1.25 x 2.25	7.0	15.0	17	1.0	18.5	15.0
40	1.0	56	4	1.25 x 2.25	6.5	11.5	14	1.0	14.5	11.5
30	1.0	56	4	1.25 x 2.25	5.0	11.5	14	1.0	14.5	11.5

ANCHOR BOLT TABLE FOR ALUMINUM POLES

MOUNTING HEIGHT	BOLT DIAMETER	BOLT LENGTH	NUMBER OF BOLTS	SLOTTED HOLE SIZE	BOLT CIRCLE DIAMETER	BOLT TEMPLATE	
					"B"	G	E
(FT)	(IN)	(IN)		(IN x IN)	(IN)	(IN)	(IN)
50	1.0	56	4	1.25 x 2.25	15.0	18.0	15.0
40	1.0	56	4	1.25 x 2.25	11.5	14.5	11.5
30	1.0	56	4	1.25 x 2.25	11.5	14.5	11.5

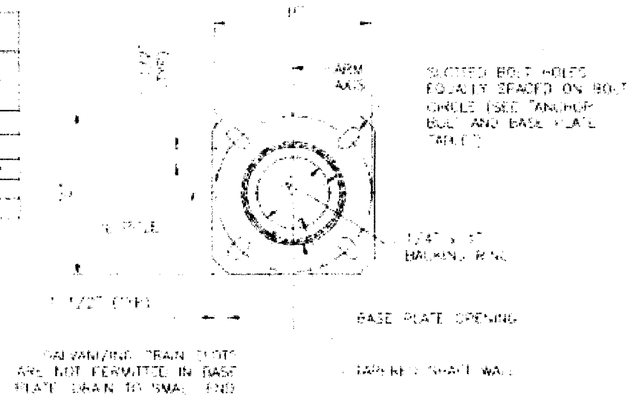

STEEL POLE BASE PLAN
NOT TO SCALE

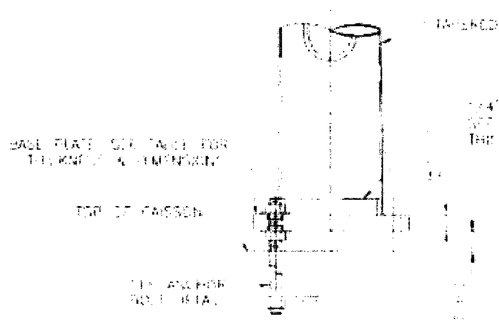

STEEL POLE
BASE ELEVATION
NOT TO SCALE

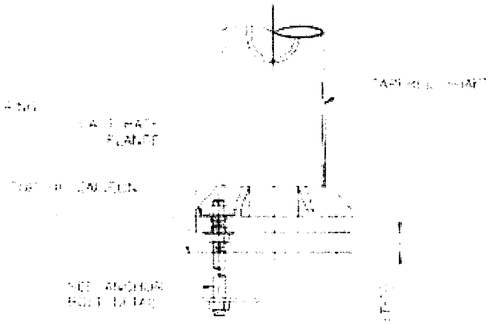

ALUMINUM POLE
BASE ELEVATION
NOT TO SCALE

GENERAL NOTES

1. REFER TO SERIAL 707L-07-7/11 FOR BREAKAWAY POLE BASE SYSTEM DETAILS AND REQUIREMENTS.
2. INSTALL DIRECT MOUNT BASE ONLY WHEN SPECIFIED. REFER TO PLANS FOR DIRECT MOUNT OR BREAKAWAY BASE REQUIREMENT.
3. STEEL BASE PLATE SHALL BE FABRICATED FROM PLATE STEEL CONFORMING TO ASTM A 36 AND SHALL BE WELDED TO POLE SHAFT PRIOR TO GALVANIZING SHAFT.
4. ALUMINUM BASE FLANGE SHALL BE CAST FROM ALUMINUM ALLOY 356 T6, CONFORMING TO ASTM B 108. BASE FLANGE SHALL ACCOMMODATE FOUR ANCHOR BOLTS AS SHOWN, AND SHALL BE CAPABLE OF DEVELOPING THE FULL MOMENT, SHEAR, AND TORSIONAL STRENGTHS OF THE ALUMINUM POLE SHAFTS. BASE FLANGE SHALL ACCOMMODATE POLE SHAFT OUTSIDE DIAMETER, OR POLE SHAFT DIAMETER MAY BE INCREASED TO BE COMPATIBLE WITH BASE FLANGE.
5. ANCHOR BOLTS AND BOLT CIRCLE DIMENSIONS FOR THE ALUMINUM POLE OPTION SHALL ACCOMMODATE THE PROVIDED CAST BASE FLANGE. ANCHOR BOLT SIZES SHOWN IN THE ANCHOR AND BASE PLATE TABLE FOR STEEL POLES SHALL BE CONSIDERED A MINIMUM FOR THE ALUMINUM POLE OPTION.
6. ANCHOR BOLT PROJECTION LENGTHS AND TOTAL LENGTHS SHOWN IN THE ANCHOR AND BASE PLATE TABLE APPLY TO DIRECT-MOUNT BASE CONDITION. ADJUST ACCORDINGLY FOR BREAKAWAY BASE CONDITION.
7. SERVICE LOADS LISTED APPLY TO THE GOVERNING CONDITION OF SINGLE- AND DOUBLE-ARM MOUNTING CONFIGURATIONS.
8. WHEN BREAKAWAY COUPLINGS ARE SPECIFIED, THREADING OF ANCHOR BOLTS SHALL MATCH THAT OF THE COUPLINGS.

NEW MEXICO
DEPARTMENT OF TRANSPORTATION
STANDARD DRAWING

ROADWAY LIGHTING
SUPPORT STRUCTURES
TYPE V

BASE PLATE & ANCHOR BOLT DETAILS

707L-07-5/11

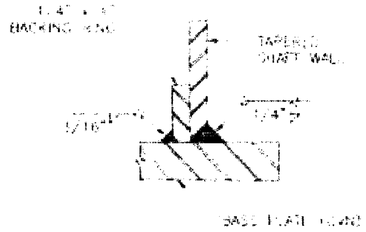

STEEL BASE WELD DETAIL
NOT TO SCALE

Note:
BACKING RING MUST BE FITTED/SIZED TO THE STEEL POLE AND CONTINUOUSLY FILLET WELDED TO THE BASE PLATE BEFORE FULL PENETRATION GROOVE WELD IS MADE

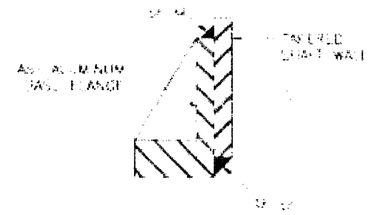

ALUMINUM BASE WELD DETAIL
NOT TO SCALE

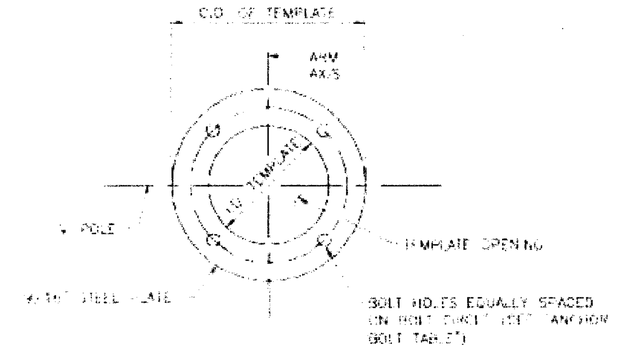

ANCHOR BOLT AND ANCHOR PLATE TEMPLATE
NOT TO SCALE

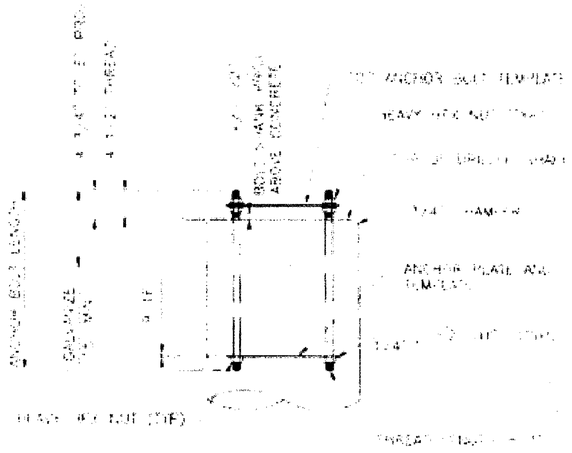

ANCHOR BOLT ASSEMBLY
NOT TO SCALE

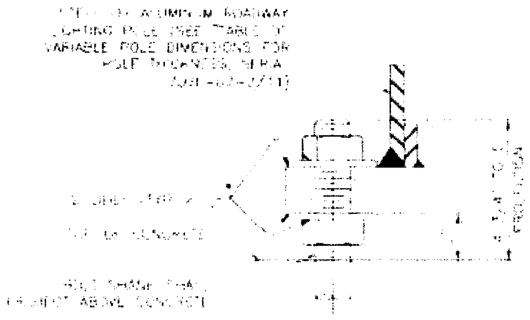

ANCHOR BOLT DETAIL
NOT TO SCALE

NEW MEXICO
DEPARTMENT OF TRANSPORTATION
STANDARD DRAWING

ROADWAY LIGHTING
SUPPORT STRUCTURES
TYPE V

BASE PLATE & ANCHOR BOLT DETAILS

707L-07-6/11

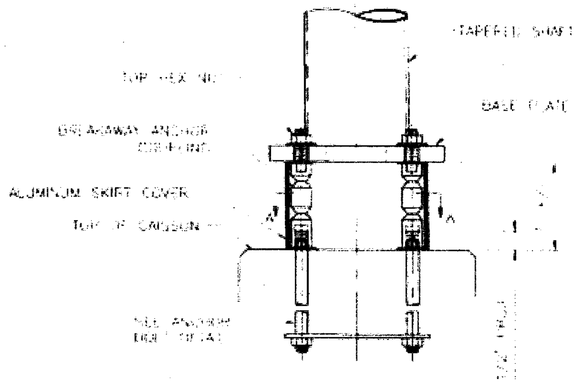

BREAKAWAY POLE
BASE ELEVATION
NOT TO SCALE

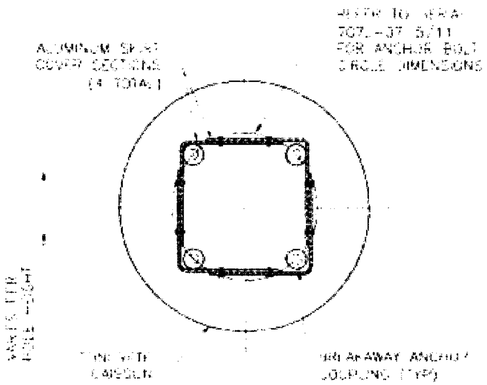

SECTION A-A:
BREAKAWAY BASE SECTION
NOT TO SCALE

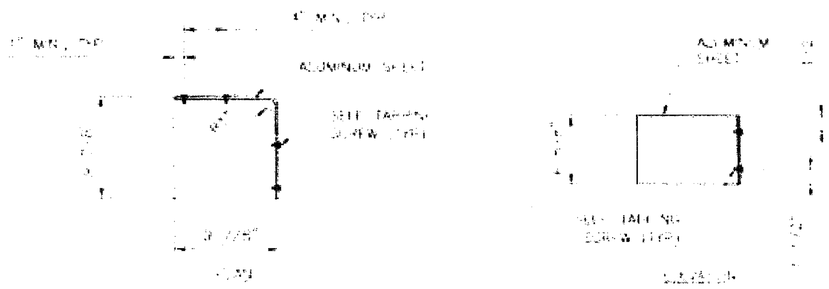

SKIRT COVER DIMENSIONS

GENERAL NOTES

1. REFER TO SERIAL 707L-07-5/11 FOR BASE PLATE AND ADDITIONAL ANCHOR BOLT DETAILS AND REQUIREMENTS.
2. SKIRT COVER SHALL BE FABRICATED FROM 1/16" SHEET ALUMINUM ALLOY 5052-H14.
3. WHEN BREAKAWAY BASES ARE SPECIFIED, EACH LIGHT POLE SHALL BE FURNISHED WITH FOUR (4) SKIRT COVER SECTIONS AND SIXTEEN (16) SCREWS.
4. THE INTENDED USE OF THE SKIRT COVER IS TO ENCLOSE THE VOID UNDER POLES WITH BREAKAWAY SUPPORT COUPLINGS.
5. SCREWS SHALL BE SELF-TAPPING #10 x 3/8" STAINLESS STEEL.
6. BREAKAWAY SUPPORT COUPLINGS SHALL MEET THE REQUIREMENTS IN NCHRP REPORT 350, AND THE REQUIREMENTS IN 2009 (5th EDITION) AASHTO STANDARD SPECIFICATIONS FOR STRUCTURAL SUPPORTS FOR HIGHWAY SIGNS, LUMINAIRES AND TRAFFIC SIGNALS, SECTION 12.
7. WHEN BREAKAWAY BASES ARE SPECIFIED, EACH LIGHT POLE SHALL BE FURNISHED WITH FOUR (4) COUPLING SYSTEMS COMPLETE WITH COUPLINGS, THREADED STUDS, WASHERS, NUTS, AND SHIMS.
8. ALTERNATE DESIGNS OF BREAKAWAY ASSEMBLIES WILL BE CONSIDERED ACCEPTABLE, PROVIDED THEY MEET THE REQUIREMENTS HEREIN. WHEN ALTERNATE BREAKAWAY SYSTEMS ARE UTILIZED, IT SHALL BE THE CONTRACTOR'S RESPONSIBILITY TO PROVIDE COMPATIBLE SKIRT COVERS, AND MAKE NECESSARY ADJUSTMENTS TO ANCHOR BOLT PROJECTIONS.
9. CERTIFICATION OF BOTH BREAKAWAY AND STRUCTURAL ADEQUACY, DESIGN CALCULATIONS AND/OR TEST DATA OF PRODUCTION SAMPLES TO SUPPORT CERTIFICATION SHALL BE PROVIDED FOR BREAKAWAY SYSTEMS IF REQUESTED BY NMDOT BRIDGE ENGINEER OR NMDOT TRAFFIC ENGINEER.

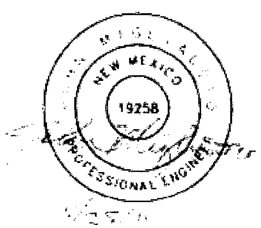

NEW MEXICO
DEPARTMENT OF TRANSPORTATION
STANDARD DRAWING

ROADWAY LIGHTING
SUPPORT STRUCTURES
TYPE V

BREAKAWAY BASE DETAILS

707L-07-7/11

NOTES:

1. [illegible]

2. [illegible]

3. [illegible]

4. [illegible]

5. [illegible]

   ALTERNATE DESIGNS FOR STANDARD [illegible] BE SUBMITTED [illegible] ENGINEER FOR APPROVAL.

6. THE FOLLOWING SOIL DESIGN PARAMETERS WERE ASSUMED FOR THE SOIL [illegible] FOUNDATION DESIGN.

   a. COHESIVE SOIL
      SOIL UNIT WEIGHT γ = [illegible]
      SOIL COHESION c = [illegible]
      FOS SLIDING F_{FS} = 1.5

   b. COHESIVE SOIL
      SOIL UNIT WEIGHT γ = [illegible]
      SOIL COHESION c = [illegible]
      FOS SLIDING F_{FS} = 1.5
      INTERNAL FRICTION ANGLE ϕ = [illegible]
      SOIL MODULUS k = [illegible]

   c. NON COHESIVE SOIL
      SOIL UNIT WEIGHT γ = [illegible]
      INTERNAL FRICTION ANGLE ϕ = 25°
      SOIL MODULUS k = [illegible]

   d. ROCK
      ROCK UNIT WEIGHT γ = [illegible]
      ROCK UNCONFINED STRENGTH = [illegible]

7. [illegible] SHALL BE CONSULTED FOR APPROVAL OF ANY REQUIRED REMEDIAL MEASURES BEFORE THE FOUNDATION IS ADJUSTED.

8. ALL [illegible] FOUNDATION SHAFTS [illegible] AGAINST FIELD [illegible] CAVES. IF SHAFT IS NOT LOCATED IN [illegible] NOTE THIS ON [illegible] THE SHAFT IS PLACED INTO SHAFT BY [illegible] 4000 PSI MINIMUM.

9. FOOTING SIZE FOR ALL FOUNDATIONS TO BE DETERMINED BY THE PROJECT ENGINEER. USE FOOTING SIZES SHOWN FOR STANDARD FOUNDATIONS ONLY WHERE [illegible] AND SOIL CONDITIONS ARE APPROVED BY THE ENGINEER AS [illegible] IN ITEM 6.

10. FOR [illegible] HEAD AND ANCHOR BOLT DETAILS, SEE NOTE 2 OF "FOUNDATION DETAILS".

11. ALL REINFORCING STEEL SHALL BE [illegible] GRADE 60 DEFORMED BARS UNLESS NOTED.

SERVICE LOADS AT TOP OF DRILLED SHAFT/SPREAD FOOTING

[illegible]	AXIAL	SHEAR	MOMENT	LATERAL
	[illegible]	[illegible]	[illegible]	[illegible]
[illegible]	[illegible]	[illegible]	[illegible]	[illegible]
[illegible]	[illegible]	[illegible]	[illegible]	[illegible]
[illegible]	[illegible]	[illegible]	[illegible]	[illegible]
[illegible]	[illegible]	[illegible]	[illegible]	[illegible]

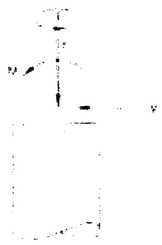

JEFFREY S. MEHLE NEW MEXICO 14790 PROFESSIONAL ENGINEER
10/2/14

NO	DATE	REV BY	DESCRIPTION

REVISIONS (OR CHANGE NOTICES)

NEW MEXICO
DEPARTMENT OF TRANSPORTATION
STANDARD DRAWING

ROADWAY LIGHTING
SUPPORT STRUCTURES
TYPE V

FOUNDATION GENERAL NOTES

707L-07-9/11

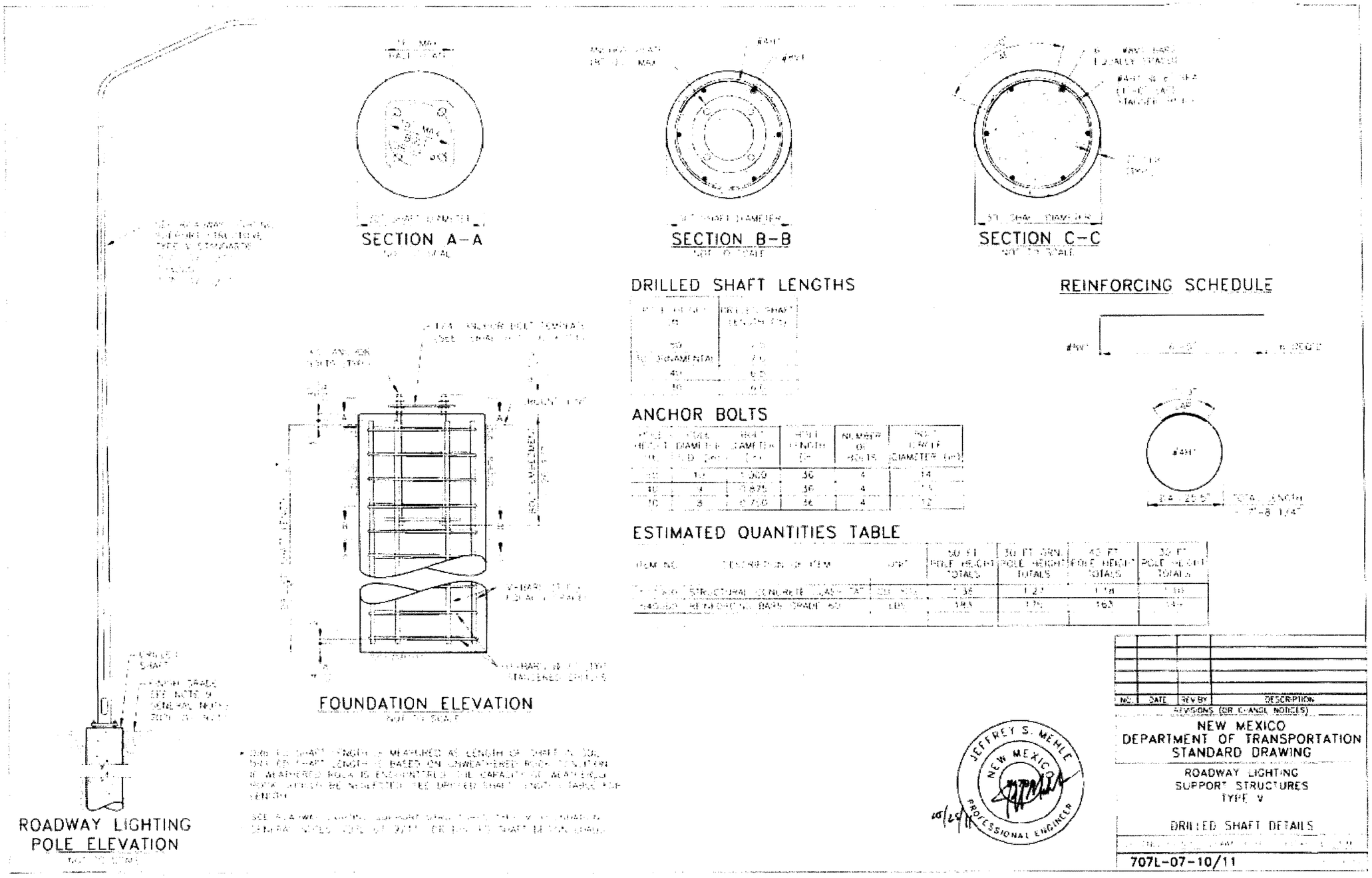
SECTION A-A
SECTION B-B
SECTION C-C
ROADWAY LIGHTING
POLE ELEVATION
FOUNDATION ELEVATION
NOT TO SCALE
DRILLED SHAFT LENGTHS
REINFORCING SCHEDULE
ANCHOR BOLTS
ESTIMATED QUANTITIES TABLE
JEFFREY S. MEHLE
NEW MEXICO
PROFESSIONAL ENGINEER
NO. DATE REV BY DESCRIPTION
REVISIONS (OR CHANGE NOTICES)
NEW MEXICO
DEPARTMENT OF TRANSPORTATION
STANDARD DRAWING
ROADWAY LIGHTING
SUPPORT STRUCTURES
TYPE V
DRILLED SHAFT DETAILS
707L-07-10/11

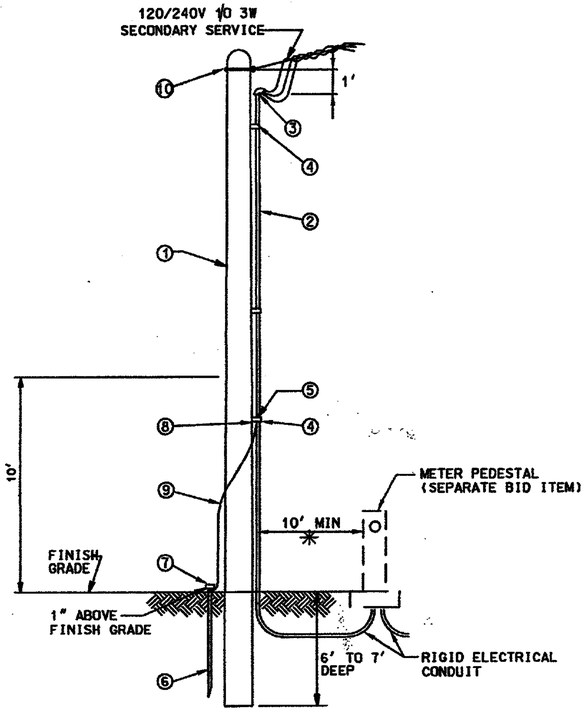

MATERIAL LIST

①	1	25' TREATED POLE
②	30'	2" GALVANIZED CONDUIT
③	1	2" WEATHER HEAD
④	2	UNIVERSAL SUPPORT BRACKET
⑤	2	2" PIPE STRAP KIT
⑥	1	COPPERWELD 3/4"x10'-0" GROUND ROD
⑦	1	GROUND ROD CLAMP
⑧	1	GROUND LUG
⑨	10'	#6 BARE COPPER GROUND WIRE
⑩	1	5/8" EYE BOLT 40' I/C #2 THW BLACK 40' I/C #2 THW WHITE 40' I/C #2 THW RED

SERVICE POLE (SIGNAL)

✳ CONDUIT AND WIRE EXTENDING MORE THAN 10' FROM POLE WILL BE MEASURED AND PAID PER ACTUAL FOOTAGE USED.

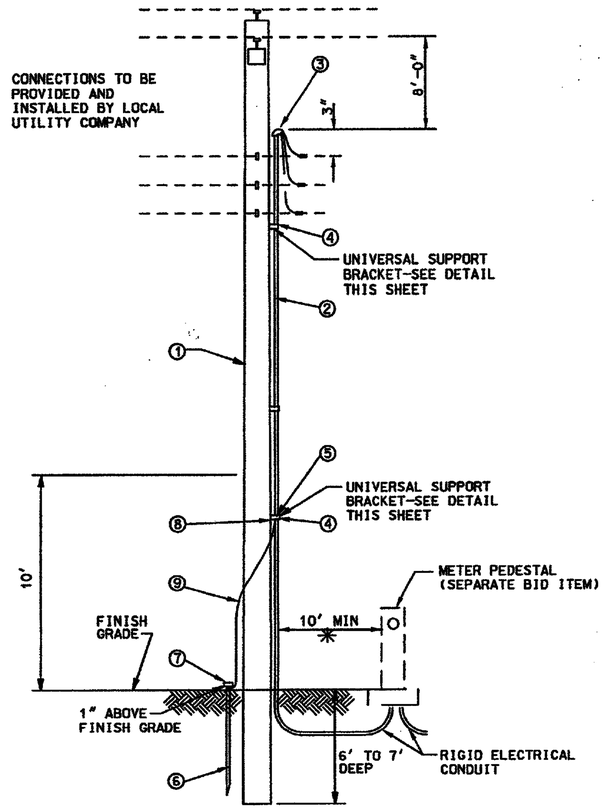

MATERIAL LIST

①	1	EXISTING POLE
②	40'	2" GALVANIZED CONDUIT
③	1	2" WEATHER HEAD
④	2	UNIVERSAL SUPPORT BRACKET
⑤	2	2" PIPE STRAP KIT
⑥	1	COPPERWELD 3/4"x10'-0" GROUND ROD
⑦	1	GROUND ROD CLAMP
⑧	1	GROUND LUG
⑨	10'	#6 BARE COPPER GROUND WIRE 50' I/C #2 THW BLACK 50' I/C #2 THW WHITE 50' I/C #2 THW RED

SERVICE RISER (SIGNAL)

✳ CONDUIT AND WIRE EXTENDING MORE THAN 10' FROM POLE WILL BE MEASURED AND PAID PER ACTUAL FOOTAGE USED

SIGNAL SERVICE NOTES

1. ALL SIGNAL SERVICE DETAILS, MATERIALS, & INSTALLATION SHALL CONFORM TO THE LOCAL POWER COMPANY REQUIREMENTS.
2. CONTACT LOCAL POWER COMPANY CUSTOMER SERVICES FOR POLE QUADRANT FOR RISERS.
3. ALL ABOVE GRADE CONDUIT SHALL BE GALVANIZED.
4. RISER BRACKET ASSEMBLY MUST BE GROUNDED PER LOCAL POWER COMPANY REQUIREMENTS.
5. CONDUIT AND WIRE EXTENDING MORE THEN 10' FROM POLE WILL BE MEASURED AND PAID PER ACTUAL FOOTAGE USED.
6. UNIVERSAL SUPPORT BRACKETS WILL BE CONSIDERED INCIDENTAL.
7. DRILLING HOLES IN EXISTING STEEL POLES FOR UNIVERSAL SUPPORT BRACKETS WILL NOT BE PERMITTED. BRACKETS SHALL BE MOUNTED ON STEEL POLES WITH STAINLESS STEEL BANDS.
8. PROVIDE ONE 50A, SINGLE POLE, 120V CIRCUIT FOR CONTROLLER SIGNALS.

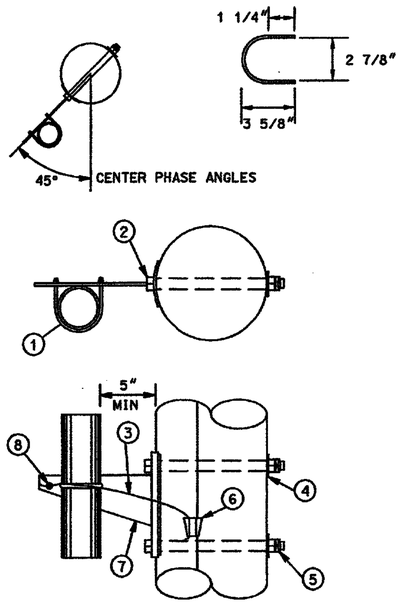

MATERIAL LIST

①	1	U BOLT
②	2	5/8" MACHINE BOLTS
③	3'	#4 SOLID COPPER WIRE
④	2	2 1/4" SQUARE WASHER
⑤	2	5/8" MF LOCKNUT
⑥	1	LINE TAP
⑦	1	SUPPORT BRACKET
⑧	1	GROUNDING LUG

UNIVERSAL SUPPORT BRACKETS NOTES:

1. BRACKET TO BE FASTENED TO POLE WITH 5/8" GALVANIZED MACHINE BOLTS.
2. BRACKET SUITABLE FOR TWO 2" CONDUITS.
3. TWO HOLE STRAPS ATTACHED AT 30" INTERVALS WITH 2" LAG SCREWS MAY BE USED INSTEAD OF THE SUPPORT BRACKET WHEN THE CONDUIT IS 1" OR LESS. A MAXIMUM OF TWO CONDUITS MAY BE STRAPPED DIRECTLY TO THE POLE.

UNIVERSAL SUPPORT BRACKETS

NO.	DATE	REV. BY	DESCRIPTION

REVISIONS (OR CHANGE NOTICES)

NEW MEXICO
DEPARTMENT OF TRANSPORTATION
STANDARD DRAWING

ELECTRICAL SERVICE DETAILS FOR SIGNALS

APPROVED _____ 12-22-14
DESIGN ENGINEER DATE

DESIGNED BY ___ DRAWN BY ___ CHECKED BY ___

706S-01-1/1

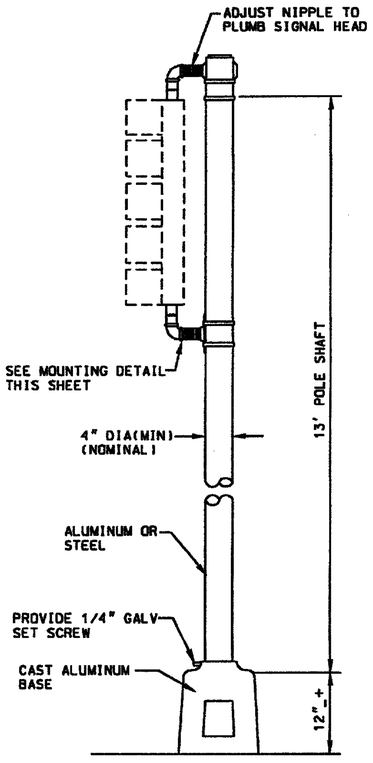

TYPE I STANDARD POLE DETAILS

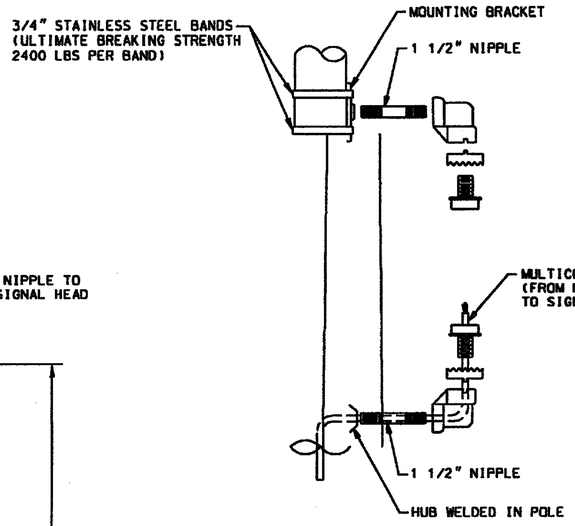

SIDE VIEW

MOUNTING DETAIL

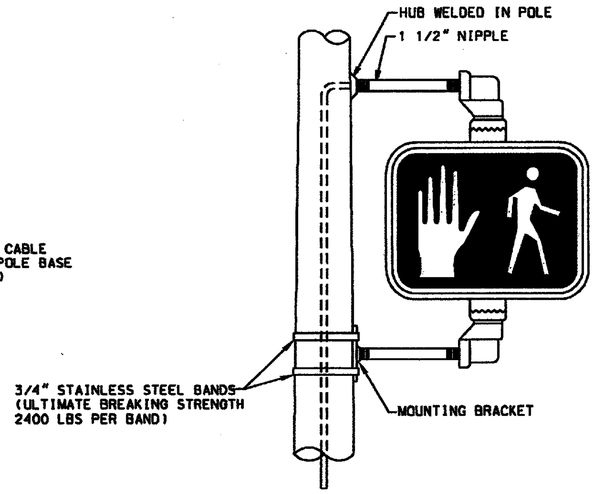

PEDESTRIAN SIGNAL

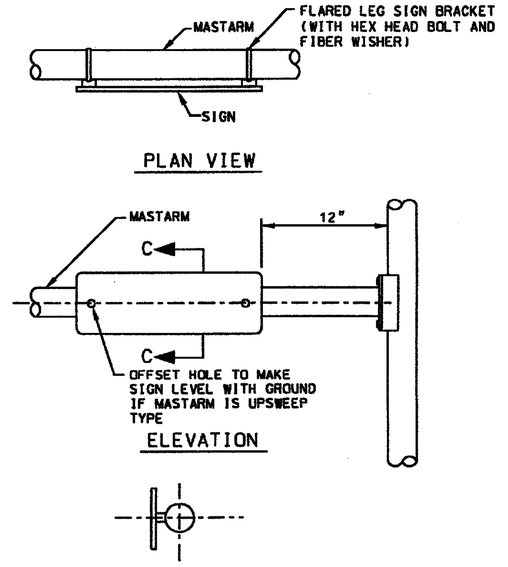

STREET NAME SIGN DETAIL

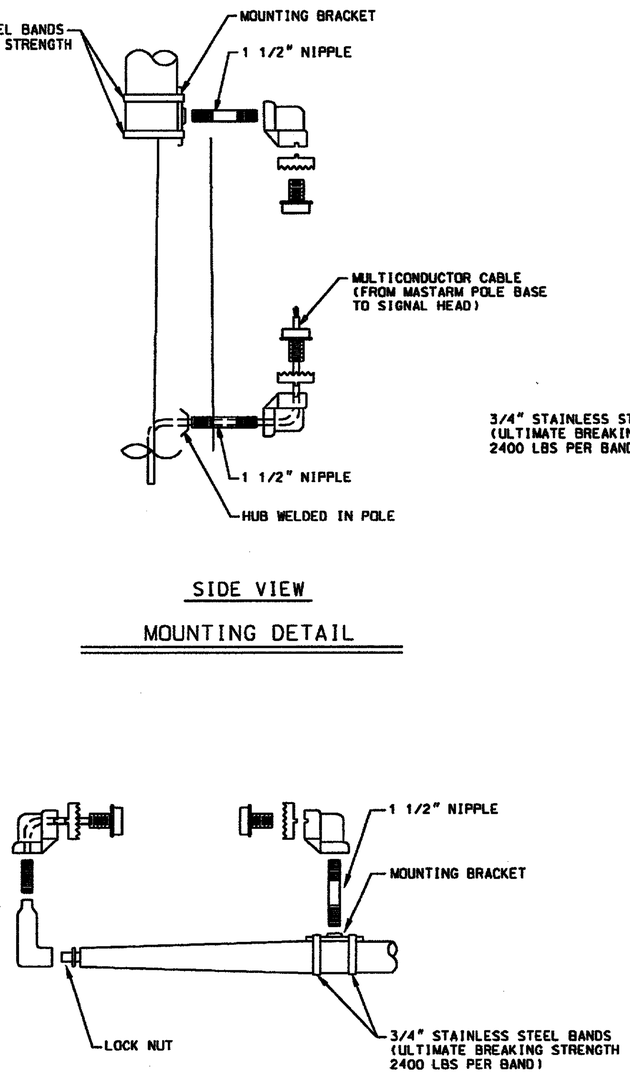

HORIZONTAL MOUNTING DETAIL

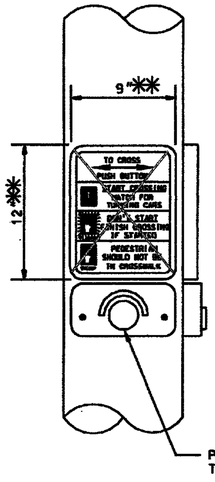

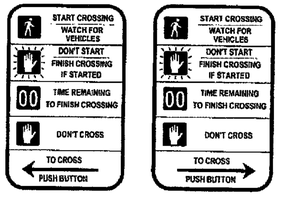

**USE SMALLER SIZE FOR TYPE I PEDESTAL POLES

PUSH BUTTON DETAIL

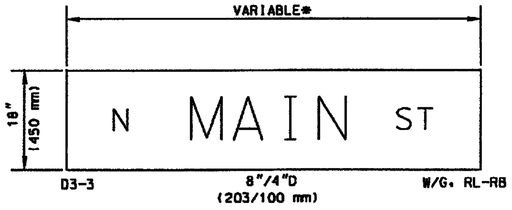

701000 ALUMINUM PANEL SIGN

* NOTE:
MAXIUM WIDTH OF SIGN SHALL BE 96 IN (2440 mm) EACH SIGN SHALL BE SHOWN ON THE SIGN FACE DETAIL SHEET AND SIGN QUANTITIES.

NOTE:

1. PEDESTRIAN ACTUATED CROSSING CONTROLS SHALL BE A MAXIMUM OF 42" ABOVE THE FINISHED PUBLIC SIDEWALK. A STABLE, FIRM, AND SLIP-RESISTANT AREA - 36" x 48" - SHALL BE PROVIDED TO ALLOW FOR A FORWARD OR A PARALLEL APPROACH TO THE CONTROLS. WHERE A PARALLEL IS PROVIDED, CONTROLS SHALL BE WITHIN 10" HORIZONTALLY OF AND CENTERED ON THE CLEAR GROUND SPACE.

2. ALL SIGNS TO BE MOUNTED ON STREET LIGHT POLES OR TRAFFIC SIGNAL POLES SHALL BE ATTACHED WITH 3/4" STAINLESS STEEL BANDS, BREAKING STRENGTH OF 2400 LBS PER BAND, AND ASSOCIATED HARDWARE (BAND-IT OR EQUAL). WORM GEAR CLAMPS ARE NOT ACCEPTABLE.

NO.	DATE	REV. BY	DESCRIPTION
			REVISIONS (OR CHANGE NOTICES)

NEW MEXICO
DEPARTMENT OF TRANSPORTATION
STANDARD DRAWING

TYPE I POLE AND
PEDESTRIAN SIGNAL DETAILS

APPROVED _____ 1-19-05
DESIGN ENGINEER DATE

DESIGNED BY___ DRAWN BY___ CHECKED BY___

707S-01-1/1

GENERAL NOTES FOR TRAFFIC SIGNAL, MAST, AND ARMS

1. SPECIFICATIONS:
   A. WORKMANSHIP AND MATERIALS SHALL CONFORM TO THE CURRENT NEW MEXICO DEPARTMENT OF TRANSPORTATION'S (NMDOT) STANDARD SPECIFICATIONS AND SPECIAL PROVISIONS.

   B. STRUCTURAL DESIGN SHALL BE AS PER AASHTO STANDARDS SPECIFICATIONS OF STRUCTURAL SUPPORTS FOR HIGHWAY SIGN LUMINAIRES AND TRAFFIC SIGNALS (2001 EDITION). DETAILS SHOWN ARE FOR ROUND STEEL POLES. POLES AND ARMS MAY BE USED ONLY WHEN PRE-APPROVED BY THE NMDOT TRAFFIC TECHNICAL SUPPORT SECTION IN CONCERT WITH THE BRIDGE DESIGN SECTION.

2. GALVANIZING:
   A. POLES, ARMS, PLATES AND BASES SHALL BE HOT DIPPED GALVANIZED PER AASHTO M-111-94 (ASTM A-123).

   B. HARDWARE AND ANCHOR BOLTS SHALL BE HOT DIPPED GALVANIZED PER ASTM F-2329.

3. MATERIALS (POLES, ARMS, LUGS, ETC.):
   A. POLES, ARMS, LUGS, ETC. SHALL BE STEEL OF 55,000 PSI MINIMUM YIELD. POLE AND ARM MINIMUM THICKNESSES ARE CALLED OUT IN THE TABLES PROVIDED FOR EACH STRUCTURE TYPE. LINEAR TAPER OF APPROXIMATELY 0.14"/FT WILL BE PROVIDED FOR SIGNAL ARM, LUMINAIRE ARM AND MAIN POLE. TEN FEET (10') LENGTHS MAY BE WELDED TOGETHER PROVIDED A BACKING RING IS USED AT THESE LOCATIONS AND THE FABRICATOR CAN GUARANTEE THE STRUCTURAL STRENGTH AT THESE JOINTS IS SUFFICIENT FOR THEIR INTENDED PURPOSE.

   B. TRANSFORMER BASES SHALL BE ASTM A-36 STEEL AND A MINIMUM THICKNESS OF 0.3125".

   C. BASE PLATES, ARM PLATES, AND POLE PLATES SHALL BE PER AASHTO M-183M (ASTM A-36).

4. SIGNAL AND LUMINAIRE ARMS:
   A. CONNECTION BETWEEN ARMS AND POLES SHALL BE MADE BY MEANS OF A DESIGN PERMITTING SIMPLE REMOVAL OF THE ARMS. MAST ARM SHALL BE MARKED AS TO WHICH IS TOP AND BOTTOM ON SIMPLEX PLATE. POLE AND ARM SHAFTS SHALL BE MARKED WITH NMDOT 20, 25, 30, 35, 40, 45, 50, 55, 60, AND 65 FT. AND DATE OF FABRICATION (MONTH/YEAR) AS APPLICABLE.

   B. ON HORIZONTAL SIGNAL - ROTATE HEAD UP AS HIGH AS POSSIBLE.

5. BOLTS:
   A. FOUNDATION ANCHOR BOLTS: SEE INDIVIDUAL SHEETS AND DETAILS FOR MINIMUM NUMBER OF BOLTS REQUIRED. BOLTS SHALL BE PER AASHTO M-314 (ASTM F-1554 GR. 55). PROVIDE THREE HEAVY HEX NUTS AND 2 WASHERS FOR EACH BOLT. THREADS SHALL BE ROLLED. BOLTS SHALL BE GALVANIZED OR PLATED AFTER THREADS ARE FORMED. EACH BOLT SHALL BE PROVIDED WITH 12" OF THREADS.

   B. ALL OTHER BOLTS SHALL BE ASTM A-449 HEX BOLTS WITH HEX NUTS AND WASHERS.

   C. NUTS SHALL BE HEAVY HEX ASTM A-563 GR. DH. WASHERS SHALL BE ASTM A-436.

   D. PRELOAD BOLTS BASED ON BOLT TYPE AND DIAMETER. PROVIDE LOCKING ADHESIVE AT BOLT CONNECTIONS (USE ND INDUSTRIES; NYLOCK; LOCKTITE, OR APPROVED EQUAL).

6. TRANSFORMER BASE:
   THE BOTTOM OF ALL TRANSFORMER BASES FOR TYPE II AND III STANDARDS SHALL BE DESIGNED TO PERMIT THE STANDARD TO BE ROTATED 90°. THE BASE SHALL BE SECURED BY HOLDING DOWN LUGS. DESIGN AND SHOP DRAWINGS FOR TRANSFORMER BASES SHALL BE SUBMITTED FOR REVIEW AND APPROVAL BY NMDOT BRIDGE ENGINEER IN COMPLIANCE WITH THE DETAILS PROVIDED.

7. WELDS:
   A. ALL FABRICATORS SHALL BE CERTIFIED UNDER SECTION 541.3 "CERTIFICATION OF STEEL FABRICATORS", SHALL CONFORM TO THE STRUCTURAL WELDING CODE (ANSI/AWS D1.1:2008) AND SHALL CONFORM TO SECTION 707 "SIGNAL AND LIGHTING STANDARDS" OF THE CURRENT NMDOT'S STANDARD SPECIFICATIONS AND SPECIAL PROVISIONS OR MEET THE DATA SHOWN ON THESE DRAWINGS.

   B. LONGITUDINAL SEAM WELDS BY SUBMERGED ARC AT 60% PENETRATION AND CIRCUMFERENTIAL BUTT WELDS AT FULL PENETRATION SHALL CONFORM TO SECTION 5.15 OF THE AASHTO STANDARD SPECIFICATIONS FOR STRUCTURAL SUPPORTS FOR HIGHWAY SIGNS, LUMINAIRES AND TRAFFIC SIGNALS AND HAVE OPTIONAL BACK-UP RINGS. ALL EXPOSED BUTT WELDS SHALL BE GROUND FLUSH.

   C. FOR WELD SIZES NOT SHOWN, USE MINIMUM SIZE WELD AS SPECIFIED BY THE LATEST WELDING CODE.

   D. BREAK ALL SHARP EDGES FOR WIRE PROTECTION.

8. POLE FOUNDATION:
   SEE SERIAL 708S-02-1/1 FOR FOUNDATION INFORMATION.

9. FOR TYPE IIA AND IIIA SUPPORT STRUCTURE, SEE SERIAL 707S-03A-1/2.
   FOR TYPE IIB AND IIIB SUPPORT STRUCTURE, SEE SERIAL 707S-03B-1/2.
   FOR TYPE IIC AND IIIC SUPPORT STRUCTURE, SEE SERIAL 707S-03C-1/2.

10. CONTRACTOR/FABRICATOR SHALL SUBMIT GROUNDING DESIGN AND DETAILS TO NMDOT FOR REVIEW AND APPROVAL BY THE PROJECT MANAGER.

11. SEE NMDOT SPECIFICATIONS AND PROJECT DEVELOPMENT PLANS FOR POWER REQUIREMENTS AND OPTICAL DETECTOR REQUIREMENTS.

12. ALL DESIGNS AND DETAILS TO BE SUBMITTED TO NMDOT FOR REVIEW AND APPROVAL SHALL BE SIGNED AND SEALED BY A LICENSED ENGINEER IN THE STATE OF NEW MEXICO.

13. SIGN MANUFACTURER SHALL PROVIDE SIGN ATTACHMENT HARDWARE DETAILS.

DESIGN NOTES

DESIGN CRITERIA:

RECURRENCE INTERVAL = 50 YEARS

SERVICE LIFE = 50 YEARS

DESIGN WIND SPEED = 90 MPH

GUST EFFECT FACTOR G = 1.14

FATIGUE CATEGORY II

MAXIMUM ALLOWABLE VERTICAL DEFLECTION AT FREE END OF TRAFFIC SIGNAL ARM FROM GALLOPING AND TRUCK INDUCED GUSTS SHALL BE 8 INCHES PER AASHTO 11.8 COMMENTARY.

MAXIMUM SIGN AREA = 21.00 SF

ALFRED P. MURILLO
NEW MEXICO
18841
PROFESSIONAL ENGINEER

Alfred Murillo 12-21-11

NO.	DATE	REV.BY	DESCRIPTION

REVISIONS (OR CHANGE NOTICES)

NEW MEXICO
DEPARTMENT OF TRANSPORTATION
STANDARD DRAWING

SIGN, SIGNAL, AND LUMINARE
SUPPORT STRUCTURES
GENERAL NOTES

DESIGNED BY NB/MS DRAWN BY CCS CHECKED BY APM

707S-02-1/1 1 of 1

ORDERING INFORMATION	
POLE ONLY	POLE WITH ALTERNATE SECTION
IIA	IIIA

GENERAL SIGNAL AND LIGHTING STANDARDS DATA

TYPE	# OF SIGNALS	H (FT)	A (FT)	B (FT)	C (FT)
IIA	1	VARIABLE	20	20'-3"	VARIABLE
	1	VARIABLE	25	20'-3"	VARIABLE
	2	VARIABLE	30	20'-3"	VARIABLE
	2	VARIABLE	35	20'-3"	VARIABLE

LUMINAIRE ARM DATA

TYPE	L LENGTH (FT)	MINIMUM O.D. AT POLE D5 (IN)	MINIMUM O.D. AT FREE END D6 (IN)	ARM THICKNESS t_{arm} (IN)	ARM PLATE E (IN)	ARM PLATE t_{arm-PL} (IN)	ARM PLATE BOLT CIRCLE ø (IN)	POLE PLATE F (IN)	POLE PLATE $t_{pole-PL}$ (IN)	BOLTS DIAMETER (IN)	BOLTS NUMBER OF BOLTS
IIIA	17	5	2.4	0.1875	10	1	8 1/2	10	1	5/8	4

LUMINAIRE EXTENSION

TYPE	C (=H-B) (FT)	MINIMUM O.D. AT BASE D7 (IN)	MINIMUM O.D. AT TOP D2 (IN)	MIN. THICKNESS $t_{ext-sec}$ (IN)	TOTAL HEIGHT H (FT)
IIIA	VARIABLE	9.95	VARIABLE	0.3125	MIN. 30', MAX. 42'

POLE DATA

TYPE	B (FT)	MINIMUM O.D. AT BASE D1 (IN)	MINIMUM O.D. AT TOP D7 (IN)	MIN. POLE THICKNESS t_{pole} (IN)	BASE PLATE K (IN)	BASE PLATE $t_{base-PL}$ (IN)	BASE PLATE BOLT CIRCLE ø (IN)	BOLTS DIAMETER (IN)	BOLTS NUMBER OF BOLTS
IIA	20'-3"	12 1/2	9.95	0.3125	21	2.5	19	1 1/2	4

SIGN & SIGNAL ARM DATA

TYPE	A (FT)	MINIMUM O.D. AT POLE D3 (IN)	MINIMUM O.D. AT FREE END D4 (IN)	MIN. ARM THICKNESS t_{arm} (IN)	ARM PLATE t_{arm-PL} (IN)	POLE PLATE $t_{pole-PL}$ (IN)	BOLTS DIAMETER (IN)	BOLTS NUMBER OF BOLTS
IIA	20	10 1/2	7.7	0.3125	2	2	1 1/2	6
	25	10 1/2	7	0.3125	2	2	1 1/2	6
	30	10 1/2	6.3	0.3125	2	2	1 1/2	6
	35	10 1/2	5.6	0.3125	2	2	1 1/2	6

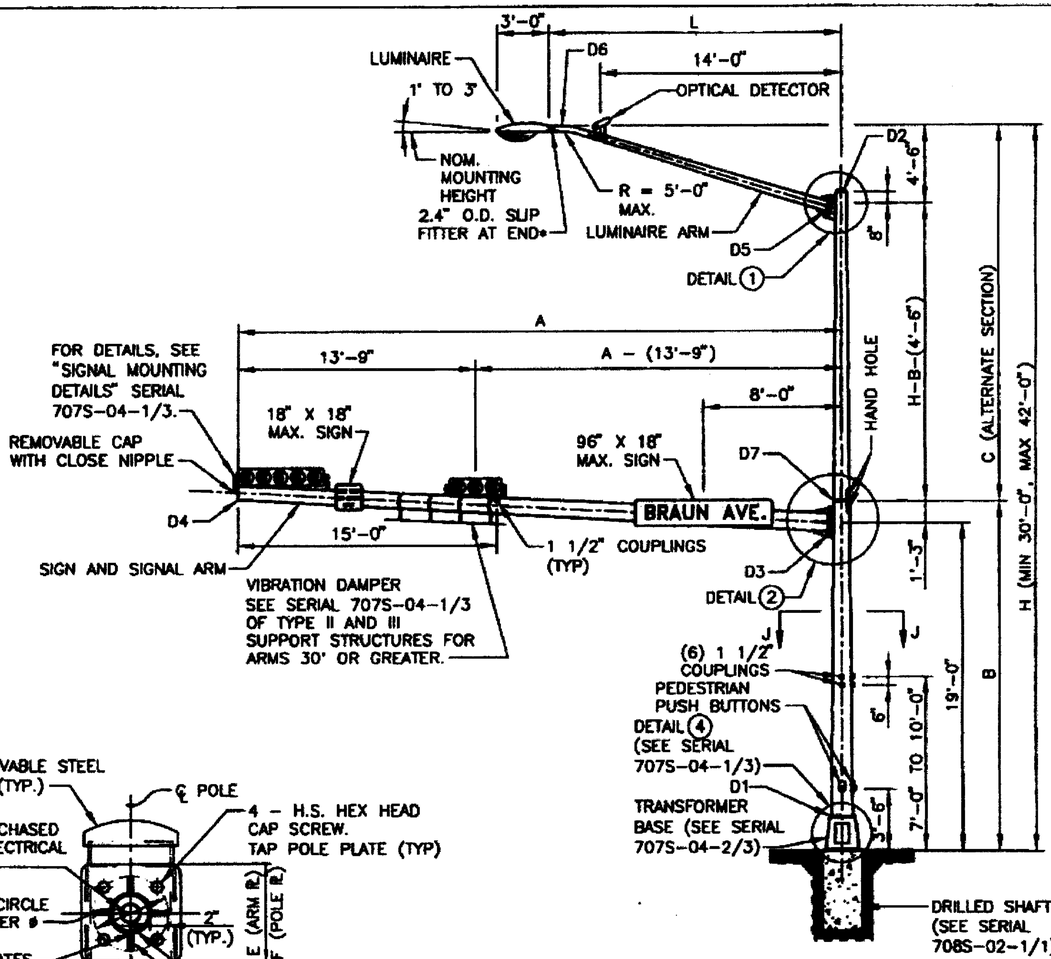

STANDARD POLE

SECTION A-A

NOTES:

1. SEE GENERAL NOTES FOR TRAFFIC SIGNAL, MAST, AND ARMS SERIAL 707S-02-1/1 FOR DESIGN INFORMATION AND SPECIFICATIONS.
2. LUMINAIRE ARM TO BASE PLATE CONNECTION FOR DETAIL (1) SHALL BE A FILLET-WELDED SOCKET CONNECTION.

NOTE: CARE SHALL BE TAKEN TO PROPERLY PLACE COUPLING TO MAINTAIN LEVEL SIGNAL HEADS AND SIGNS ON ARMS.

ALFRED P. MURILLO NEW MEXICO 15841 PROFESSIONAL ENGINEER

Alfred Murillo 12-24-11

NO.	DATE	REV. BY	DESCRIPTION
REVISIONS (OR CHANGE NOTICES)			

NEW MEXICO DEPARTMENT OF TRANSPORTATION STANDARD DRAWING

SIGN, SIGNAL, AND LUMINARE SUPPORT STRUCTURES TYPE IIA AND IIIA

DESIGNED BY MS DRAWN BY CCS CHECKED BY APM

707S-03A-1/2 1 of 2

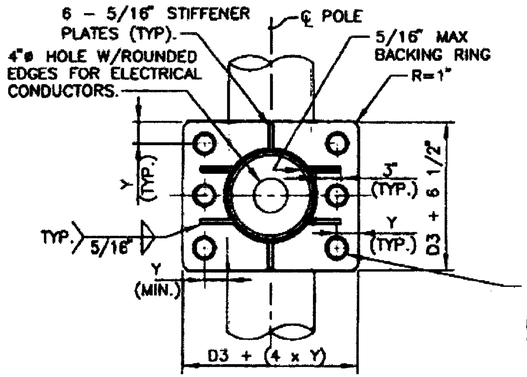

SECTION B-B

Y = 1.5 X BOLT DIAMETER (MIN).

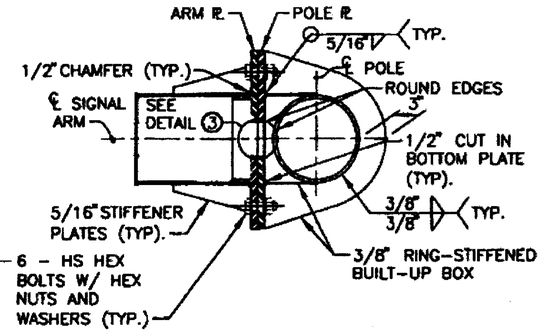

SECTION C-C

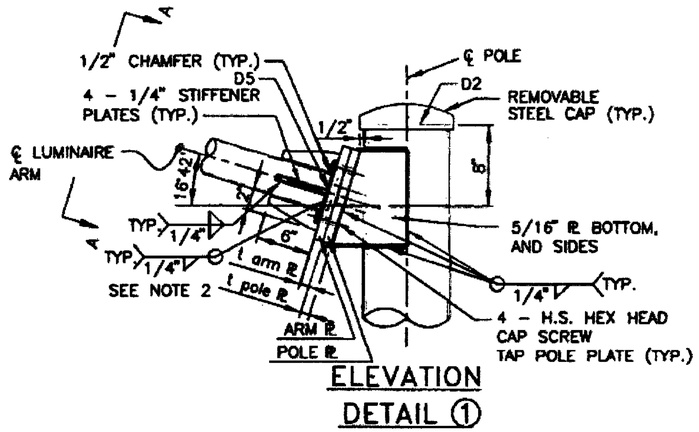

ELEVATION DETAIL ①

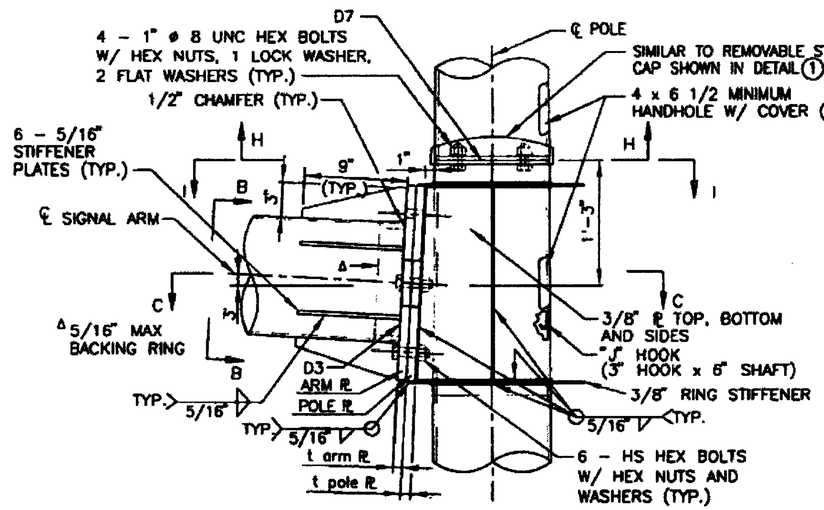

ELEVATION DETAIL ②

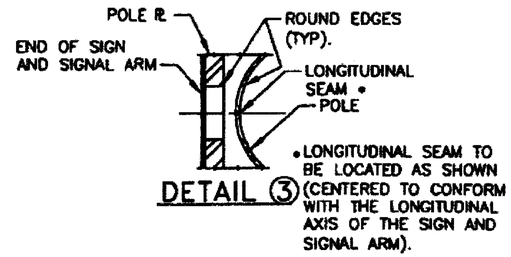

DETAIL ③

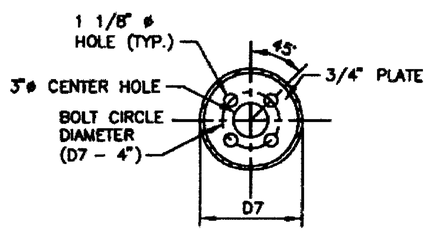

SECTION H-H

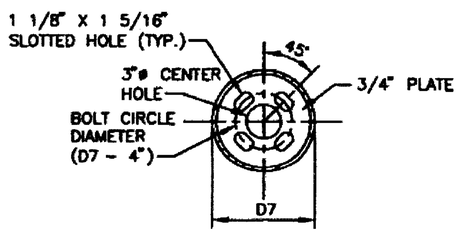

SECTION I-I

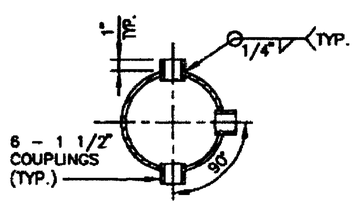

SECTION J-J

ALFRED P. MURILLO NEW MEXICO 18841 PROFESSIONAL ENGINEER

Alfred Murillo 12-21-11

NO.	DATE	REV.BY	DESCRIPTION
			REVISIONS (OR CHANGE NOTICES)

NEW MEXICO
DEPARTMENT OF TRANSPORTATION
STANDARD DRAWING

SIGN, SIGNAL, AND LUMINARE SUPPORT STRUCTURES TYPE IIA AND IIIA

DESIGNED BY MS DRAWN BY CCS CHECKED BY APM

707S-03A-2/2 2 of 2

ORDERING INFORMATION	
POLE ONLY	POLE WITH ALTERNATE SECTION
IIB	IIIB

GENERAL SIGNAL AND LIGHTING STANDARDS DATA

TYPE	# OF SIGNALS	H (FT)	A (FT)	B (FT)	C (FT)
IIB	3	VARIABLE	50	20'-3"	VARIABLE
	3	VARIABLE	45	20'-3"	VARIABLE
	3	VARIABLE	40	20'-3"	VARIABLE

LUMINAIRE ARM DATA

TYPE	L LENGTH (FT)	MINIMUM O.D. AT POLE D5 (IN)	MINIMUM O.D. AT FREE END D6 (IN)	ARM THICKNESS t_{arm} (IN)	ARM PLATE E (IN)	ARM PLATE t_{arm-PL} (IN)	ARM PLATE BOLT CIRCLE ø (IN)	POLE PLATE F (IN)	POLE PLATE $t_{pole-PL}$ (IN)	BOLTS DIAMETER (IN)	BOLTS NUMBER OF BOLTS
IIIB	17	5	2.4	0.1875	12	1	8 1/2	12	1	5/8	4

LUMINAIRE EXTENSION

TYPE	A (FT)	C (=H-B) (FT)	MINIMUM O.D. AT BASE D7 (IN)	MINIMUM O.D. AT TOP D2 (IN)	MIN. THICKNESS $t_{ext-sec}$ (IN)	TOTAL HEIGHT H (FT)
IIIB	40	VARIABLE	11.95	VARIABLE	0.3125	MIN. 30', MAX. 42'
IIIB	45	VARIABLE	11.95	VARIABLE	0.3125	MIN. 30', MAX. 42'
IIIB	50	VARIABLE	13.45	VARIABLE	0.3125	MIN. 30', MAX. 42'

POLE DATA

TYPE	A (FT)	B (FT)	MINIMUM O.D. AT BASE D1 (IN)	MINIMUM O.D. AT TOP D7 (IN)	MIN. POLE THICKNESS t_{pole} (IN)	BASE PLATE K (IN)	BASE PLATE $t_{base-PL}$ (IN)	BASE PLATE BOLT CIRCLE ø (IN)	BOLTS DIAMETER (IN)	BOLTS NUMBER OF BOLTS
IIB	40	20'-3"	14 1/2	11.95	0.3125	23	2 1/2	21	1 1/2	6
	45	20'-3"	14 1/2	11.95	0.3125	23	2 1/2	21	1 1/2	6
	50	20'-3"	16	13.45	0.3125	23	2 1/2	21	1 1/2	6

SIGN & SIGNAL ARM DATA

TYPE	A (FT)	MINIMUM O.D. AT POLE D3 (IN)	MINIMUM O.D. AT FREE END D4 (IN)	MIN. ARM THICKNESS t_{arm} (IN)	ARM PLATE t_{arm-PL} (IN)	POLE PLATE $t_{pole-PL}$ (IN)	BOLTS DIAMETER (IN)	BOLTS NUMBER OF BOLTS
IIB	40	13 1/2	7.9	0.3125	2	2	1 1/2	6
	45	13 1/2	7.2	0.3125	2	2	1 1/2	6
	50	15 1/2	8.5	0.3125	2	2	1 1/2	6

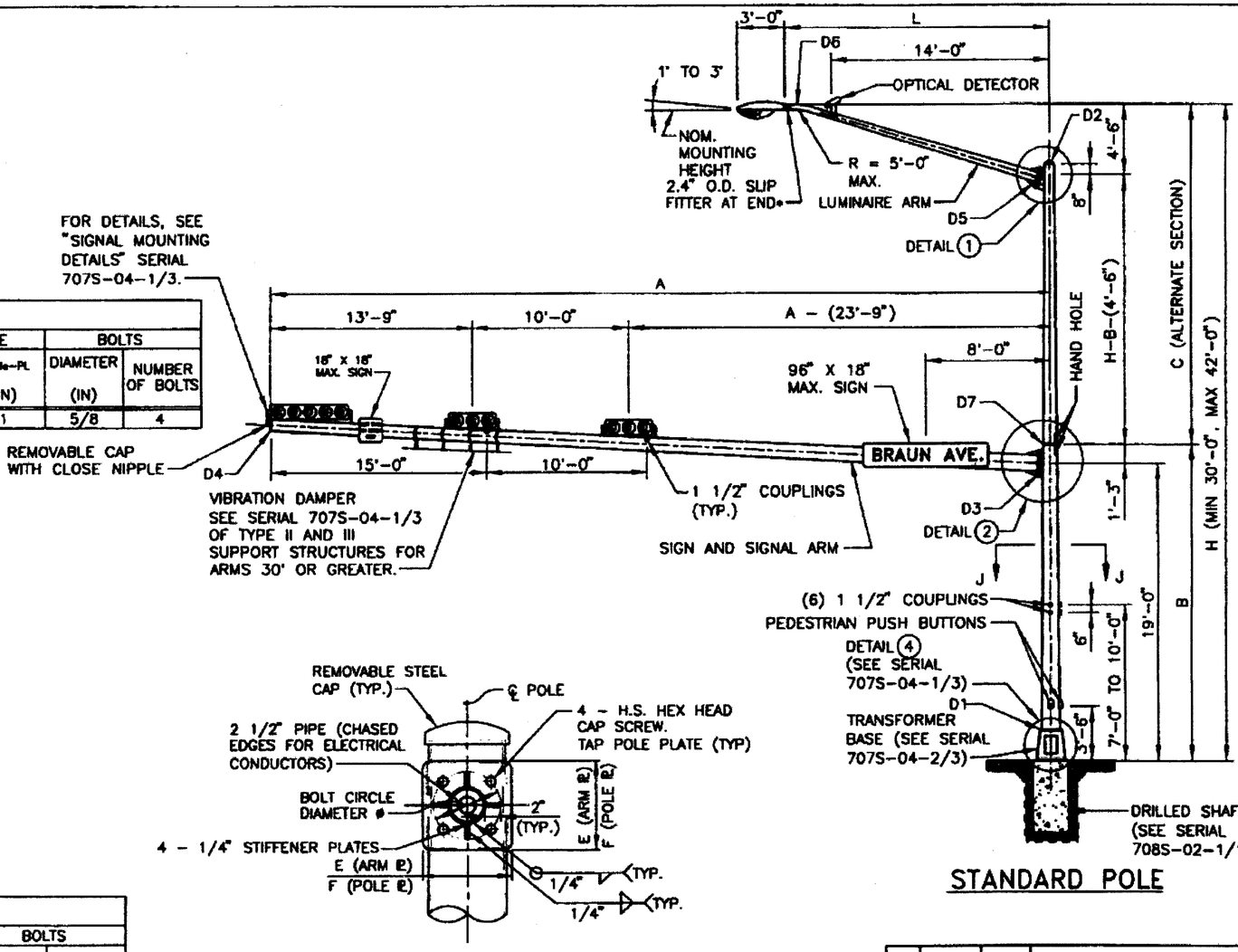

NOTES:

1. SEE GENERAL NOTES FOR TRAFFIC SIGNAL, MAST, AND ARMS SERIAL 707S-02-1/1 FOR DESIGN INFORMATION AND SPECIFICATIONS.
2. LUMINAIRE ARM TO BASE PLATE CONNECTION FOR DETAIL (1) SHALL BE A FILLET-WELDED SOCKET CONNECTION.

NOTE: CARE SHALL BE TAKEN TO PROPERLY PLACE COUPLING TO MAINTAIN LEVEL SIGNAL HEADS AND SIGNS ON ARMS.

ALFRED P. MURILLO NEW MEXICO 18841 PROFESSIONAL ENGINEER

12-21-11

Alfred Murillo

NO.	DATE	REV.BY	DESCRIPTION

REVISIONS (OR CHANGE NOTICES)

NEW MEXICO DEPARTMENT OF TRANSPORTATION STANDARD DRAWING

SIGN, SIGNAL, AND LUMINARE SUPPORT STRUCTURES TYPE IIB AND IIIB

DESIGNED BY MS DRAWN BY CCS CHECKED BY APM

707S-03B-1/2 1 of 2

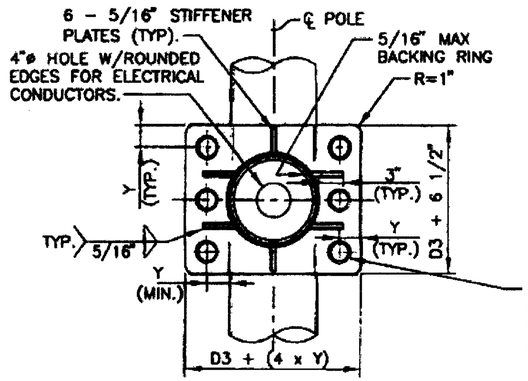

SECTION B-B

Y = 1.5 X BOLT DIAMETER (MIN).

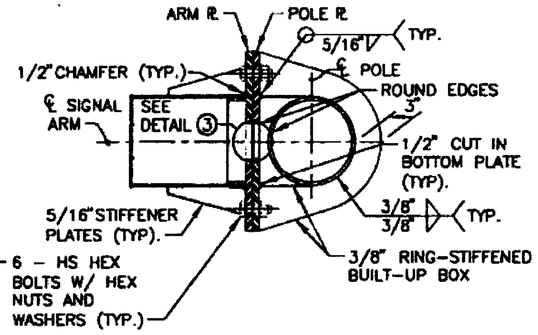

SECTION C-C

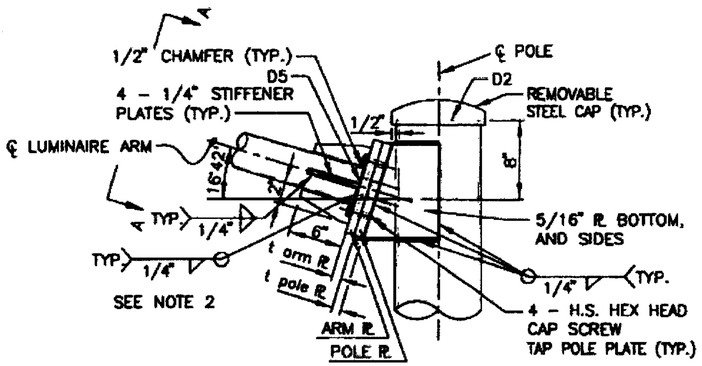

ELEVATION

DETAIL ①

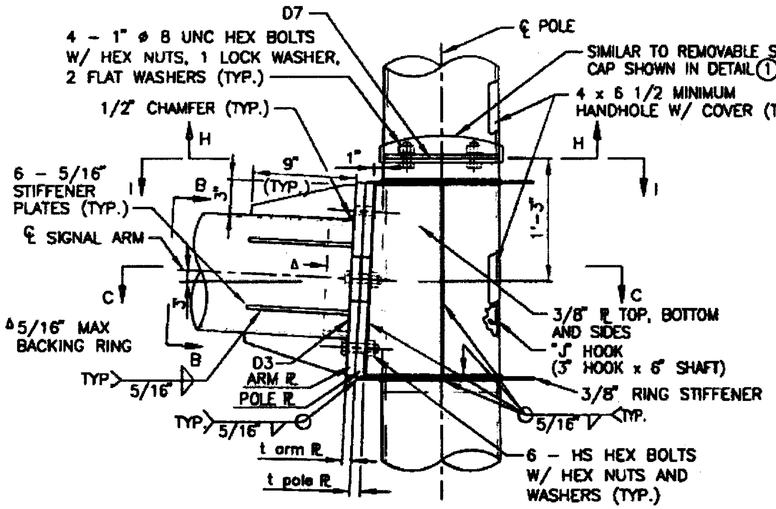

ELEVATION

DETAIL ②

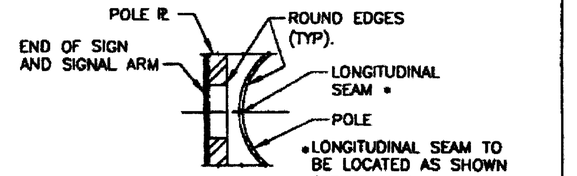

DETAIL ③

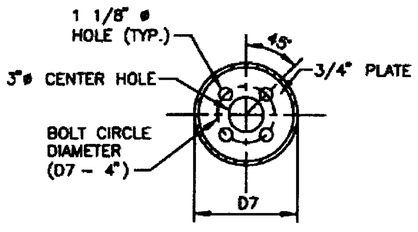

SECTION H-H

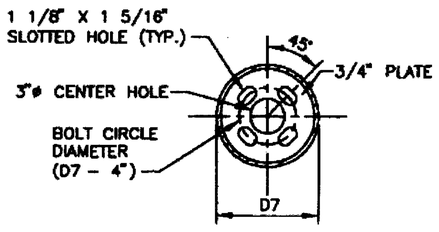

SECTION I-I

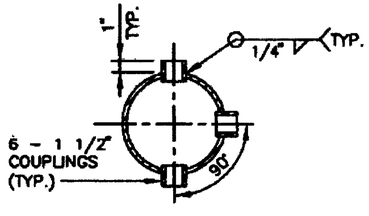

SECTION J-J

ALFRED P. MURILLO NEW MEXICO 18841 PROFESSIONAL ENGINEER

Alfred Murillo 12-21-11

NO.	DATE	REV.BY	DESCRIPTION
			REVISIONS (OR CHANGE NOTICES)

NEW MEXICO
DEPARTMENT OF TRANSPORTATION
STANDARD DRAWING

SIGN, SIGNAL, AND LUMINARE SUPPORT STRUCTURES TYPE IIB AND IIIB

DESIGNED BY MS DRAWN BY CCS CHECKED BY APM

707S-03B-2/2 2 of 2

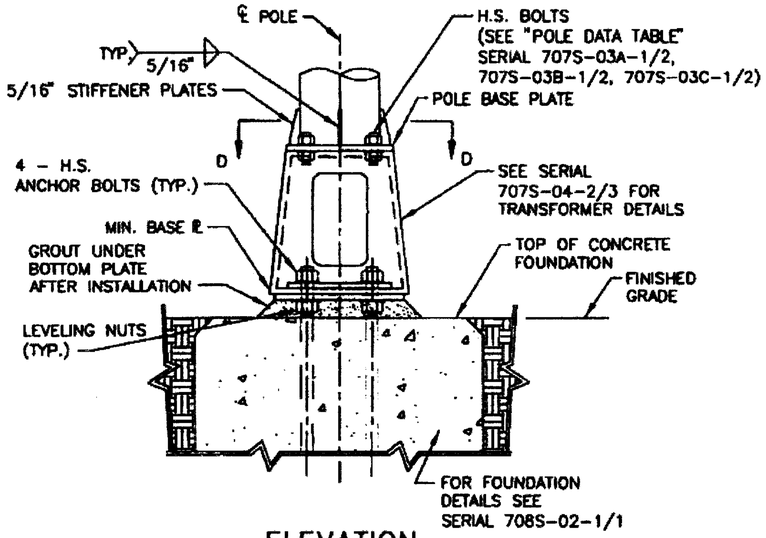

ELEVATION DETAIL ④

NOT TO SCALE

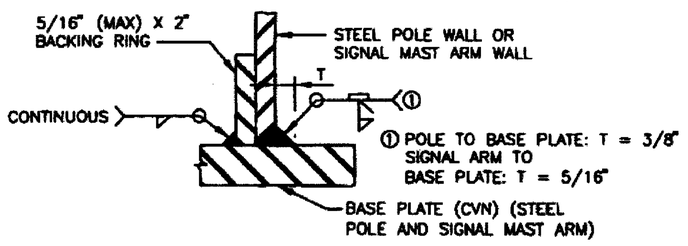

WELD DETAIL

NOT TO SCALE

NOTE:

BACKING RING MUST BE FITTED/SIZED TO THE STEEL POLE AND CONTINUOUSLY FILLET WELDED TO THE BASE PLATE BEFORE FULL PENETRATION GROOVE WELD IS MADE.

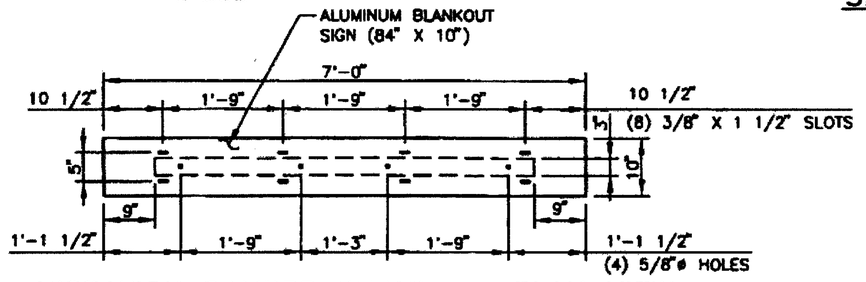

VIBRATION DAMPER DETAIL - PLAN VIEW

NOT TO SCALE

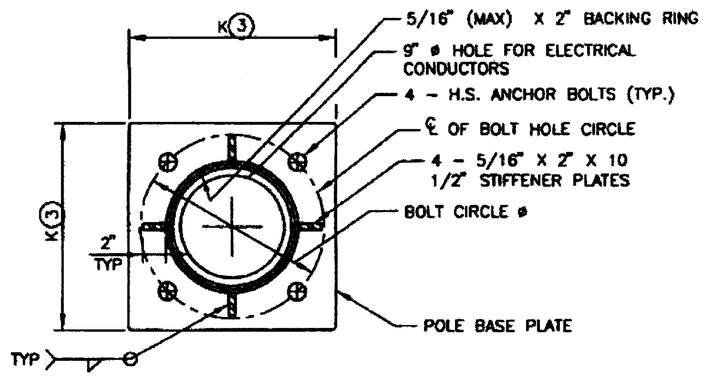

SECTION D-D - 4 BOLT

NOT TO SCALE

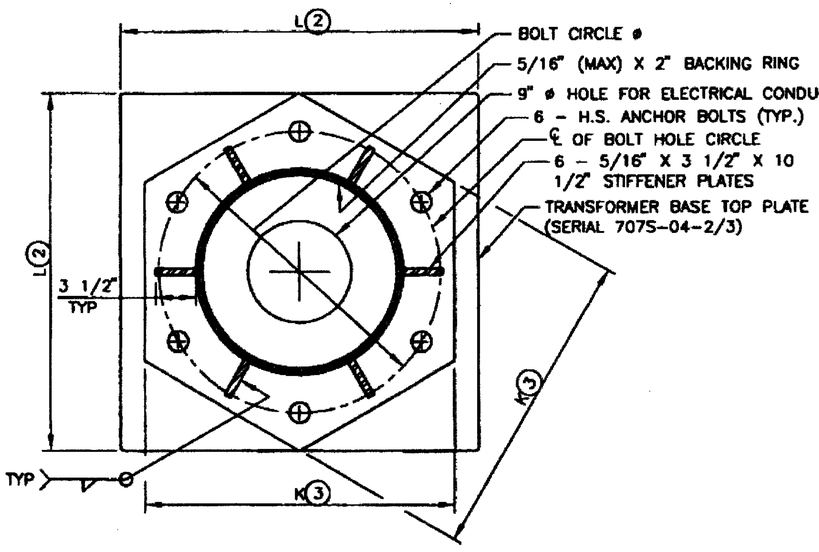

SECTION D-D - 6 BOLT

NOT TO SCALE

(2) SEE SERIAL NO. 707S-04-2/2

(3) SEE "POLE DATA" TABLE, SEE SERIAL NO.
707S-03A-1/2
707S-03B-1/2
707S-03C-1/2

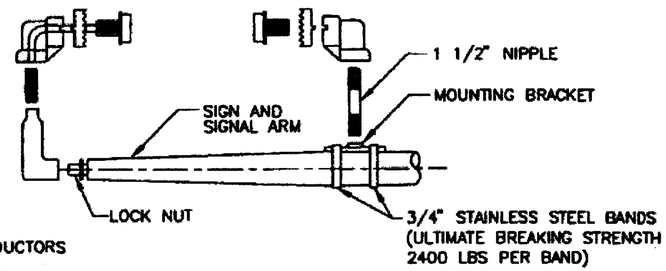

SIGNAL MOUNTING DETAIL

NOT TO SCALE

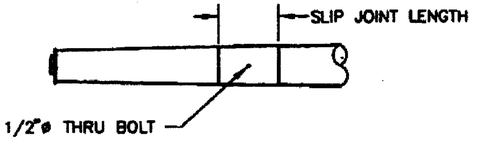

MAST ARM SLIP JOINT

(FOR ARMS OVER 50' IN LENGTH)

NOT TO SCALE

NOTE:

FIELD ASSEMBLE TO ACHEIVE A SNUG TIGHT JOINT (MIN. OVERLAP NOT LESS THAT 1.5 TIMES THE O.D. OF THE FEMALE END SECTION).

NOTES:

1. SEE GENERAL NOTES FOR TRAFFIC SIGNAL, MAST, AND ARM SPECIFICATIONS.
2. VIBRATION DAMPER SHALL BE AN ALUMINUM BLANKOUT SIGN WITH DIMENSIONS AS SHOWN. REFERENCE NMDOT SPECIFICATIONS FOR ADDITIONAL SIGN AND ATTACHMENT REQUIREMENTS.

ALFRED P. MURILLO NEW MEXICO 18841 PROFESSIONAL ENGINEER

Alfred Murillo 12.21.11

NO.	DATE	REV.BY	DESCRIPTION
REVISIONS (OR CHANGE NOTICES)			

NEW MEXICO DEPARTMENT OF TRANSPORTATION STANDARD DRAWING

SIGN, SIGNAL, AND LUMINARE SUPPORT STRUCTURES TYPE II AND III

DESIGNED BY MS DRAWN BY CCS CHECKED BY APM

707S-04-1/3 1 of 3

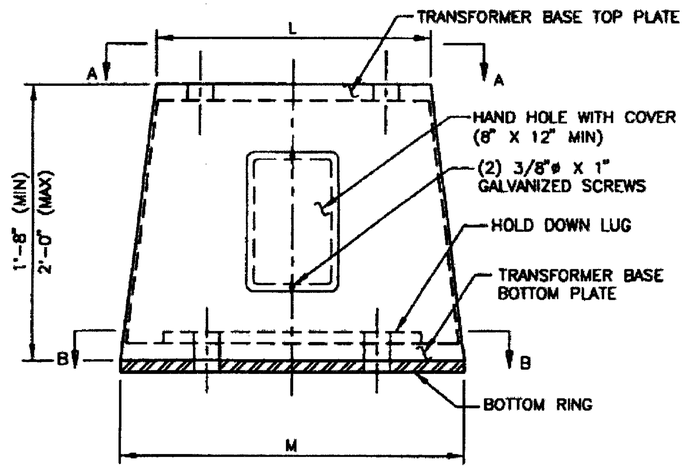

TRANSFORMER BASE DETAIL
NOT TO SCALE

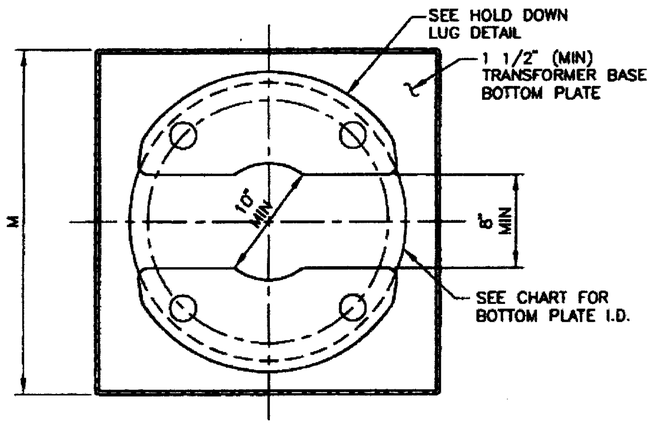

SECTION B-B ①
NOT TO SCALE

NOTES:

1. SEE GENERAL NOTES FOR TRAFFIC SIGNAL, MAST, AND ARMS SERIAL 707S-02-1/1 FOR DESIGN INFORMATION AND SPECIFICATIONS.
2. REFERENCE NMDOT SPECIFICATION 707 FOR ADDITIONAL TRANSFORMER BASE REQUIREMENTS.
3. TRANSFORMER BASE DETAILS ARE PROVIDED AS MINIMUM GEOMETRIC REQUIREMENTS. DESIGN AND DETAILS SHALL BE SUBMITTED TO NMDOT FOR REVIEW AND APPROVAL . ALL TRANSFORMER BASES SHALL ALLOW 90° ROTATION AT BOTTOM OF TRANSFORMER.
4. MINIMUM BOLT CIRCLE DIAMETER IS PROVIDED. LARGER DIAMETERS ARE PERMITTED, BUT SHALL AVOID CONFLICTS WITH DRILLED SHAFT REINFORCING. SEE SERIAL 708S-02-1/1 FOR FOUNDATION INFORMATION. REVISED BOTTOM RING DESIGN AND DETAILS SHALL BE SUBMITTED FOR REVIEW AND APPROVAL.
5. GEOMETRY OF HOLD DOWN LUG MAY BE MODIFIED, BUT SHALL BE DESIGNED TO PERMIT 90° ROTATION.

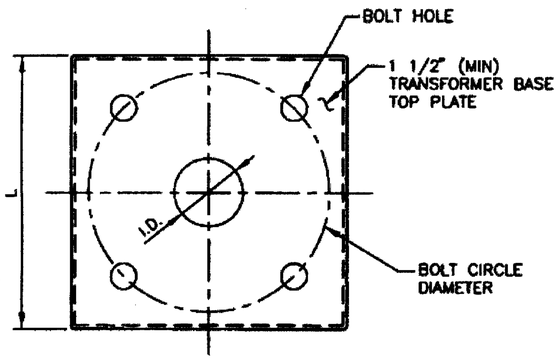

VIEW A-A ①
NOT TO SCALE

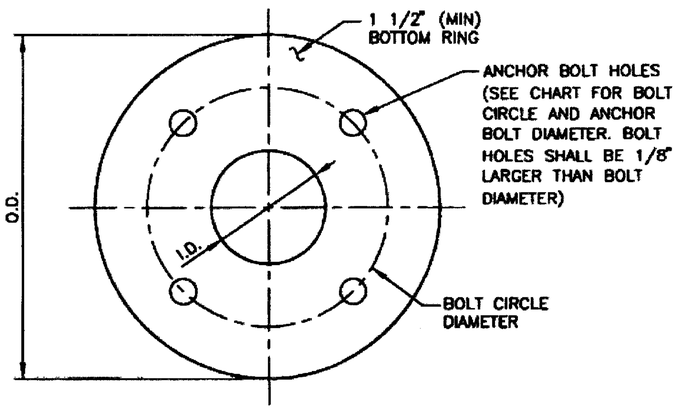

BOTTOM RING AND
ANCHOR BOLT TEMPLATE DETAIL ①
(ALL ANCHOR BOLTS TO BE SET
USING BOTTOM RING AS TEMPLATE.)
NOT TO SCALE

① 4- BOLT PATTERN SHOWN.
6-BOLT PATTERN NOT SHOWN FOR CLARITY. BOLTS SHALL BE EQUALLY SPACED ON BOLT CIRLCE.

ALFRED P. MURILLO
NEW MEXICO
18841
PROFESSIONAL ENGINEER

Alfred Murillo 12.21.11

NO.	DATE	REV.BY	DESCRIPTION
			REVISIONS (OR CHANGE NOTICES)

NEW MEXICO
DEPARTMENT OF TRANSPORTATION
STANDARD DRAWING

SIGN, SIGNAL, AND LUMINARE
SUPPORT STRUCTURES
TYPE II AND III

DESIGNED BY MS DRAWN BY CCS CHECKED BY APM

707S-04-2/3 2 of 3

MAST ARM LENGTH (FT)	TRANSFORMER BASE TOP PLATE				TRANSFORMER BASE BOTTOM PLATE				BOTTOM RING				ANCHOR BOLT TEMPLATE				ANCHOR BOLTS		
	L (IN)	I.D. (IN)	BOLT CIRCLE DIAMETER (IN)	THICK (IN) *	M (IN) *	I.D. (IN) *	BOLT CIRCLE DIAMETER (IN)	THICK (IN) *	O.D. (IN) *	I.D. (IN)	BOLT CIRCLE DIAMETER (IN)	THICK (IN) *	O.D. (IN)	I.D. (IN)	BOLT CIRCLE DIAMETER (IN)	THICK (IN)	NO.	SIZE (IN)	LENGTH (IN)
20	21	6	19.0	NOTE 3	NOTE 3	NOTE 3	19.0	NOTE 3	NOTE 3	10	19.0	NOTE 3	20.5	17.5	19.0	0.3125	4	1.5	68
25	21	6	19.0	NOTE 3	NOTE 3	NOTE 3	19.0	NOTE 3	NOTE 3	10	19.0	NOTE 3	20.5	17.5	19.0	0.3125	4	1.5	68
30	21	6	19.0	NOTE 3	NOTE 3	NOTE 3	19.0	NOTE 3	NOTE 3	10	19.0	NOTE 3	20.5	17.5	19.0	0.3125	4	1.5	68
35	21	6	19.0	NOTE 3	NOTE 3	NOTE 3	19.0	NOTE 3	NOTE 3	10	19.0	NOTE 3	20.5	17.5	19.0	0.3125	4	1.5	68
40	27	6	21.0	NOTE 3	NOTE 3	NOTE 3	21.0	NOTE 3	NOTE 3	10	21.0	NOTE 3	22.5	19.5	21.0	0.3125	6	1.5	68
45	27	6	21.0	NOTE 3	NOTE 3	NOTE 3	21.0	NOTE 3	NOTE 3	10	21.0	NOTE 3	22.5	19.5	21.0	0.3125	6	1.5	68
50	27	6	21.0	NOTE 3	NOTE 3	NOTE 3	21.0	NOTE 3	NOTE 3	10	21.0	NOTE 3	23.5	20.5	21.0	0.3125	6	1.5	68
55	29	6	23.0	NOTE 3	NOTE 3	NOTE 3	23.0	NOTE 3	NOTE 3	10	23.0	NOTE 3	24.0	21.0	23.0	0.3125	6	1.75	68
60	31	6	25.0	NOTE 3	NOTE 3	NOTE 3	25.0	NOTE 3	NOTE 3	10	25.0	NOTE 3	26.0	23.0	25.0	0.3125	6	1.75	68
65	31	6	25.0	NOTE 3	NOTE 3	NOTE 3	25.0	NOTE 3	NOTE 3	10	25.0	NOTE 3	26.0	23.0	25.0	0.3125	6	1.75	68

* REFERENCE SERIAL 707S-04-2/3 FOR NOTE 3.

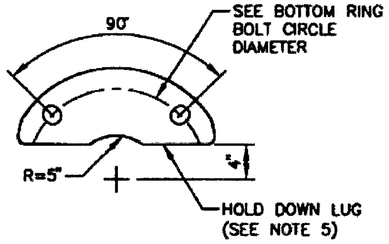

BOTTOM HOLD DOWN LUG DETAIL
2 REQ'D (ALLOWS 360° ROTATION)
NOT TO SCALE

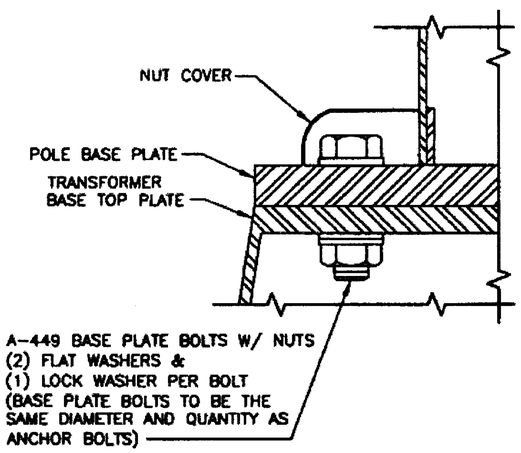

POLE TO TRANSFORMER BASE CONNECTION
NOT TO SCALE

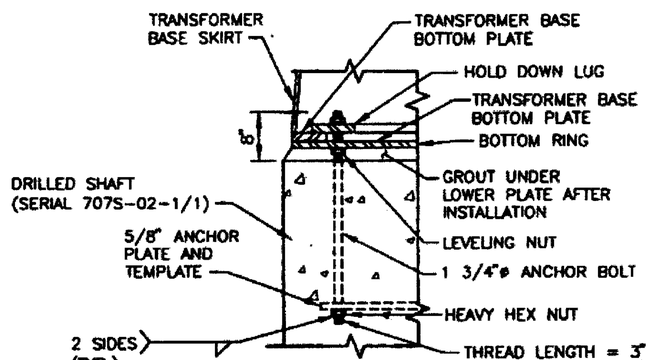

ANCHOR BOLT DETAIL
NOT TO SCALE

NO.	DATE	REV.BY	DESCRIPTION

REVISIONS (OR CHANGE NOTICES)

NEW MEXICO
DEPARTMENT OF TRANSPORTATION
STANDARD DRAWING

SIGN, SIGNAL, AND LUMINARE
SUPPORT STRUCTURES
TYPE II AND III

ALFRED P. MURILLO
NEW MEXICO
18841
PROFESSIONAL ENGINEER

12.21.11

DESIGNED BY MS DRAWN BY CCS CHECKED BY APM

707S-04-3/3 3 of 3

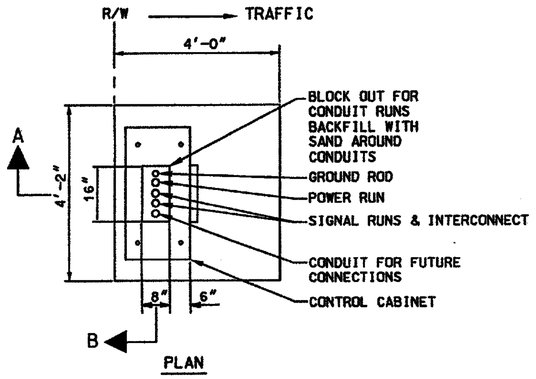

PLAN

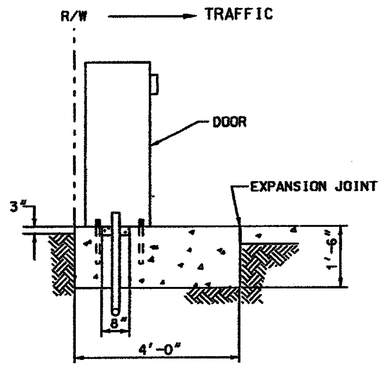

SECTION A

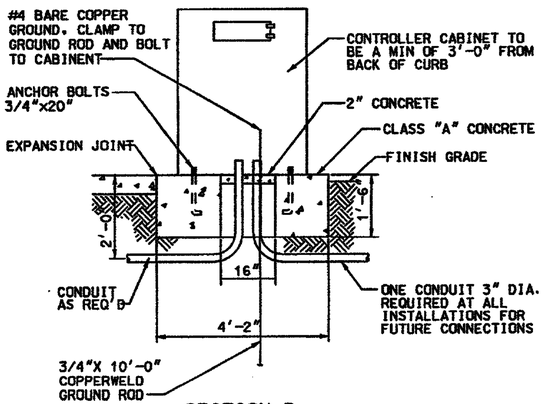

SECTION B

CONTROLLER FOUNDATION DETAIL

IN THE EVENT THE SUPPLIED CABINET WOULD OVERLAP THE SIDES OF ABOVE FOUNDATION. THE FOUNDATION SHALL BE INCREASED IN SIZE AS DIRECTED BY THE ENGINEER.

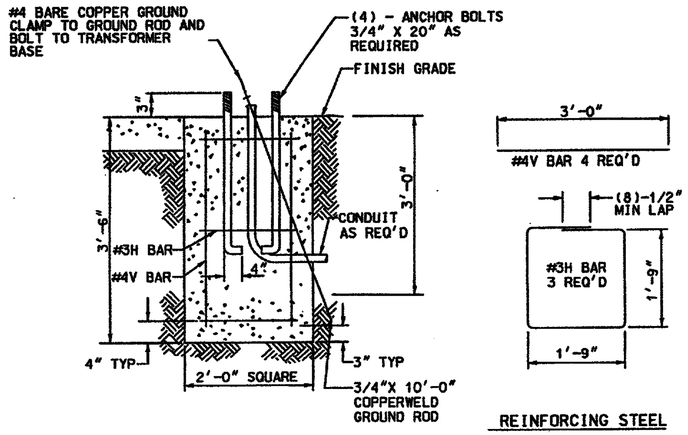

REINFORCING STEEL

PEDESTAL FOUNDATION DETAILS-TYPE I STANDARD

ESTIMATED QUANTITIES

FOUNDATION	CLASS "A" CONC CUBIC YARDS	REINFORCING BARS POUNDS
PEDESTAL POLE TYPE I	0.52	17
CONTROLLER CABINET TYPE P & R	0.88	—
SPLICE CABINET	0.52	17

NOTES

1. ALTERNATE DESIGNS FOR STANDARD FOUNDATIONS TO BE SUBMITTED TO THE BRIDGE ENGINEER FOR APPROVAL.
2. ALL GROUND RODS SHALL BE 3/4" X 10'-0" . ALL SIGNAL FOUNDATIONS SHALL INCLUDE COPPERWELD GROUND RODS AS SHOWN WHICH SHALL BE CONSIDERED INCIDENTAL TO THE COMPLETION OF THE FOUNDATION. NO PRICE OR PAYMENT SHALL BE MADE THEREFOR.
3. FINISHED GRADE FOR ALL FOUNDATIONS TO BE DETERMINED BY THE PROJECT ENGINEER. THE TOP OF STANDARD FOUNDATIONS SHALL BE FLUSH WITH ADJACENT SIDEWALK OR PAVED AREAS.

NO.	DATE	REV. BY	DESCRIPTION

REVISIONS (OR CHANGE NOTICES)

NEW MEXICO
DEPARTMENT OF TRANSPORTATION
STANDARD DRAWING

FOUNDATION DETAILS
FOR TYPE I STANDARD
AND CONTROLLER CABINET

APPROVED _____ 12-22-04
DESIGN ENGINEER DATE

DESIGNED BY___ DRAWN BY___ CHECKED BY___

708S-01-1/1

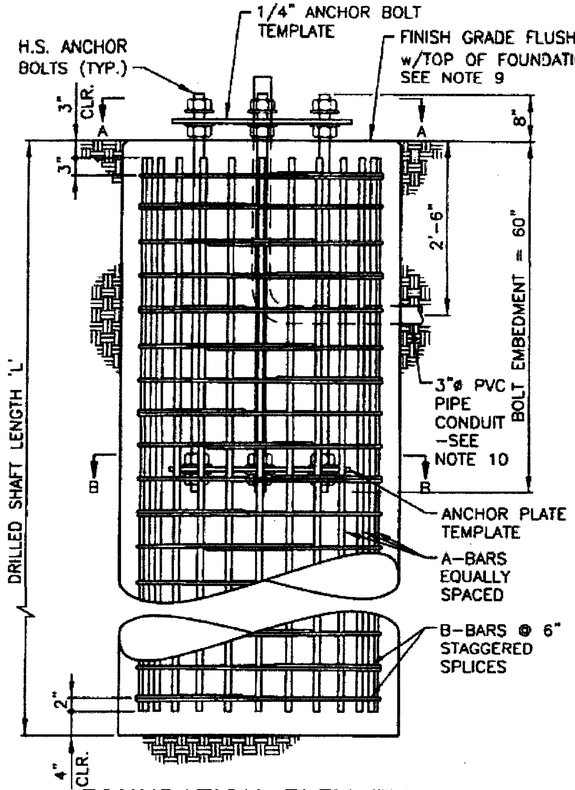

FOUNDATION ELEVATION

NOT TO SCALE

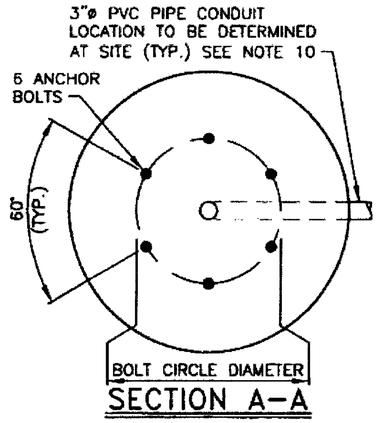

SECTION A-A

NOT TO SCALE

SECTION A-A

NOT TO SCALE

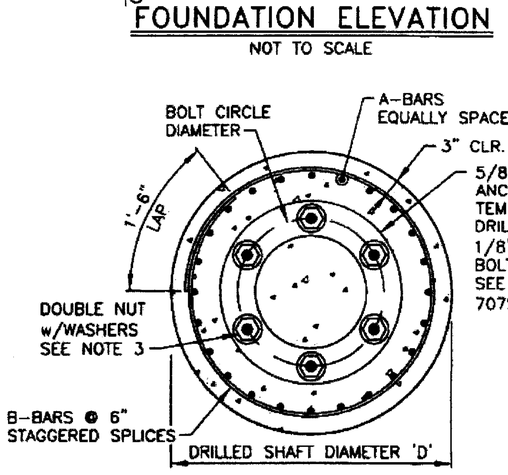

SECTION B-B

NOT TO SCALE

6 ANCHOR BOLT CONFIGURATION SHOWN,
4 ANCHOR BOLT CONFIGURATION IS SIMILAR.

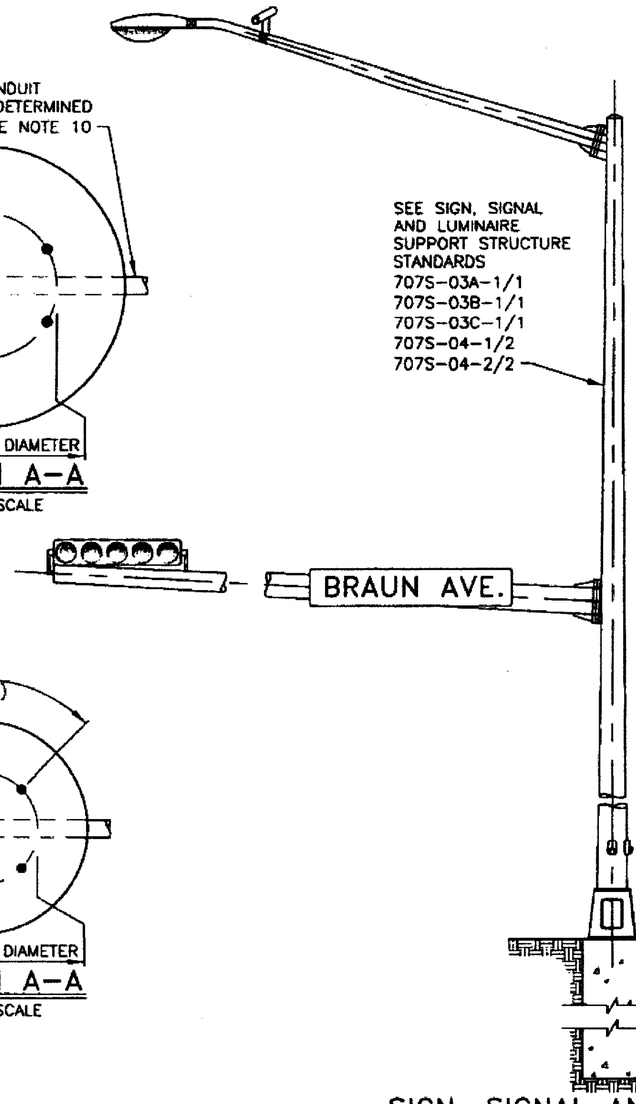

SIGN, SIGNAL AND LUMINAIRE POLE ELEVATION

NOT TO SCALE

JEFFREY S. MEHLE
NEW MEXICO
14790
12/21/11
PROFESSIONAL ENGINEER

NO.	DATE	REV.BY	DESCRIPTION

REVISIONS (OR CHANGE NOTICES)

NEW MEXICO
DEPARTMENT OF TRANSPORTATION
STANDARD DRAWING

SIGN, SIGNAL AND LUMINAIRE
SUPPORT STRUCTURES
FOUNDATION DETAILS

DESIGNED BY AYB DRAWN BY BDC CHECKED BY JSM

708S-02-1/2 1 OF 2

NOTES:

1. CONCRETE SHALL CONFORM TO SECTION 510 – PORTLAND CEMENT CONCRETE. CONCRETE IS TO BE CLASS "G", f'c = 3000 PSI.

2. REINFORCING STEEL (REBAR) SHALL CONFORM TO SECTION 540 – STEEL REINFORCEMENT AASHTO M-31 (ASTM A 615), GRADE 60. DIMENSIONS REFER TO THE CENTERLINE OF BARS.

3. ANCHOR BOLTS SHALL CONFORM TO AASHTO M-314 (ASTM F 1554 GRADE 55). PROVIDE A HEX NUT, LEVELING NUT AND 2 WASHERS TOP AND BOTTOM OF EACH BOLT. ANCHOR BOLTS SHALL BE CONSIDERED INCIDENTAL TO THE FOUNDATIONS.

4. CONCRETE IS TO BE PLACED IN DRILLED HOLES. DUE TO EXISTING SOIL CONDITIONS THE USE OF A HOLE CASING MAY BE REQUIRED. THE CASING SHALL BE PULLED AS THE CONCRETE IS PLACED WITH A 6" MINIMUM OVERLAP.

5. FOUNDATION DESIGN IS FOR THE SIGN, SIGNAL AND LUMINAIRE STANDARD DIAMETERS SHOWN AND A ROUND OR DODECAGONAL SHAPE SHAFT. IF A LARGER DIAMETER IS FURNISHED, THE CONTRACTOR SHALL BUILD A LARGER FOUNDATION AS DETERMINED NECESSARY BY THE BRIDGE ENGINEER AND NO ADDITIONAL PAYMENT OR COMPENSATION SHALL BE MADE.

6. ALTERNATE DESIGNS FOR STANDARD FOUNDATIONS TO BE SUBMITTED TO THE BRIDGE ENGINEER FOR APPROVAL.

7. THE FOLLOWING SOIL DESIGN PARAMETERS WERE ASSUMED FOR THE POLE FOUNDATION DESIGN:

   a) COHESIVE SOIL:
   SOIL UNIT WEIGHT γ = 100 lb/ft^3
   SOIL COHESION c = 800 lb/ft^2
   SOIL STRAIN ε_{50} = 0.01
   THIS DESCRIPTION WOULD APPLY WHERE SOFT TO STIFF CLAY SOILS EXIST.

   b) NON-COHESIVE SOIL:
   SOIL UNIT WEIGHT γ = 120 lb/ft^3
   INTERNAL FRICTION ANGLE ϕ = 28°
   SOIL MODULUS K = 90 lb/in^3
   THIS DESCRIPTION WOULD APPLY WHERE LOOSE TO MEDIUM DENSE SANDY SOILS EXIST.

   c) ROCK
   ROCK UNIT WEIGHT γ = 140 lb/ft^3
   ROCK UNCONFINED STRENGTH Su = 21,600 lb/ft^2
   THIS DESCRIPTION WOULD APPLY WHERE FAIR ROCK TO VERY GOOD ROCK EXISTS.

   EVALUATE SOIL CONDITIONS TO DETERMINE WHICH SOIL DESIGN PARAMETERS BEST MATCHES SITE CONDITIONS. PROVIDED DESIGN IS LIMITED TO THE NOTED PARAMETERS.

   SHOULD THE SOIL CONDITIONS VARY IN SIGNIFICANT CONTRAST TO ANY OF THOSE DESCRIBED IN a, b OR c ABOVE, THE STATE GEOTECHNICAL ENGINEER SHALL BE CONSULTED FOR APPROVAL OF ANY REQUIRED REMEDIAL MEASURES BEFORE THE FOUNDATION PLACEMENT.

8. ALL HOLES FOR FOUNDATION SHAFTS SHALL BE POURED AGAINST UNDISTURBED EARTH. IF SHAFT IS NOT LOCATED IN UNDISTURBED SOILS THEN ALL SOILS THE SHAFT IS PLACED INTO SHALL BE COMPACTED TO 95% MINIMUM.

9. FINISHED GRADE FOR ALL FOUNDATIONS TO BE DETERMINED BY THE PROJECT ENGINEER. THE TOP OF STANDARD FOUNDATIONS SHALL BE FLUSH WITH ADJACENT SIDEWALK OR PAVED AREAS WHEN PRESENT AND SHALL CONFORM TO THE AMERICANS WITH DISABILITIES ACT.

10. PVC CONDUIT SHALL BE CALLED OUT IN SHOP DRAWINGS USING A MINIMUM 3" CONDUIT PIPE OR AS REQUIRED BY THE SIGN, SIGNAL AND LUMINAIRE MANUFACTURER.

11. ALL FOUNDATIONS SHALL INCLUDE COPPERWELD GROUND RODS AS REQUIRED BY THE SIGN, SIGNAL AND LUMINAIRE MANUFACTURER. PLACEMENT AND INSTALLATION OF GROUND RODS SHALL BE SHOWN WITH SHOP DRAWINGS AND SHALL BE CONSIDERED INCIDENTAL TO THE COMPLETION OF THE FOUNDATION.

ANCHOR BOLTS

SIGNAL POLE MAST ARM LENGTH (ft)	VERTICAL POLE DIAMETER O.D. (in)	BOLT DIAMETER (in)	BOLT LENGTH (in)	NUMBER OF BOLTS	BOLT CIRCLE DIAMETER (in)
20-35	12.5	1.5	68	4	19
40-45	14.5	1.5	68	6	21
50	16	1.5	68	6	21
55	16	1.75	68	6	23
60	18	1.75	68	6	25
65	18	1.75	68	6	25

TRAFFIC SIGNAL: COHESIVE SOIL

SIGNAL POLE MAST ARM LENGTH (ft)	DRILLED SHAFT DIAMETER 'D' (in)	DRILLED SHAFT LENGTH 'L' (ft)	A-BARS			B-BARS			ESTIMATED QUANTITIES		
			SIZE	NO.	LENGTH	SIZE	NO.	LENGTH	CONCRETE (cu. yd.)	BARS (lbs.)	EXCAVATION (cu. yd.)**
20-35	36	10	#8	14	9'-6"	#4	20	9'-4"	2.7	480	3
40-50	42	14	#8	18	13'-6"	#4	28	11'-0"	5.0	689	6
55-65	48	16	#8	24	15'-6"	#4	32	12'-6"	7.5	1260	8

TRAFFIC SIGNAL: NON-COHESIVE SOIL

SIGNAL POLE MAST ARM LENGTH (ft)	DRILLED SHAFT DIAMETER 'D' (in)	DRILLED SHAFT LENGTH 'L' (ft)	A-BARS			B-BARS			ESTIMATED QUANTITIES		
			SIZE	NO.	LENGTH	SIZE	NO.	LENGTH	CONCRETE (cu. yd.)	BARS (lbs.)	EXCAVATION (cu. yd.)**
20-35	36	16	#8	14	15'-6"	#4	32	9'-4"	4.2	779	5
40-50	42	16	#8	18	15'-6"	#4	32	11'-0"	5.7	981	6
55-65	48	16	#8	24	15'-6"	#4	32	12'-6"	7.5	1260	8

TRAFFIC SIGNAL: ROCK

SIGNAL POLE MAST ARM LENGTH (ft)	DRILLED SHAFT DIAMETER 'D' (in)	DRILLED SHAFT LENGTH 'L' (ft)*	A-BARS			B-BARS			ESTIMATED QUANTITIES		
			SIZE	NO.	LENGTH	SIZE	NO.	LENGTH	CONCRETE (cu. yd.)	BARS (lbs.)	EXCAVATION (cu. yd.)**
20-35	36	10	#8	14	9'-6"	#4	20	9'-4"	2.7	480	3
40-50	42	12	#8	18	11'-6"	#4	24	11'-0"	4.3	730	4
55-65	48	12	#8	24	11'-6"	#4	24	12'-6"	5.6	938	6

DRILLED SHAFT LENGTH 'L' IS MEASURED AS THE LENGTH OF SHAFT IN SOIL.

* DRILLED SHAFT LENGTH 'L' IN ROCK IS BASED ON UNWEATHERED ROCK CONDITION. IF WEATHERED ROCK IS ENCOUNTERED, THE CAPACITY OF WEATHERED ROCK SHOULD BE NEGLECTED.

** FOR CONTRACTOR'S INFORMATION ONLY.

JEFFREY S. MEHLE NEW MEXICO 14790 PROFESSIONAL ENGINEER

NO.	DATE	REV.BY	DESCRIPTION

REVISIONS (OR CHANGE NOTICES)

NEW MEXICO
DEPARTMENT OF TRANSPORTATION
STANDARD DRAWING

SIGN, SIGNAL AND LUMINAIRE
SUPPORT STRUCTURES
FOUNDATION DETAILS

DESIGNED BY AYB DRAWN BY BDC CHECKED BY JSM

708S-02-2/2 2 OF 2

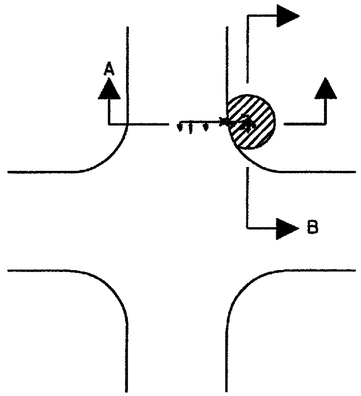

PLAN VIEW

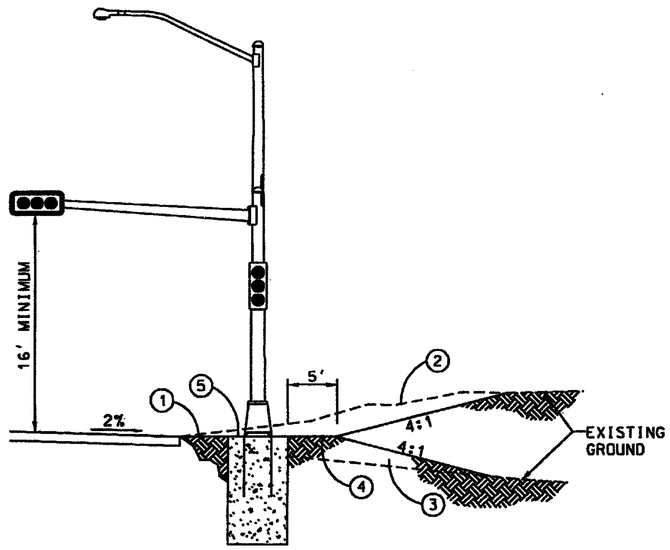

SECTION A (W/OUT SIDEWALK)

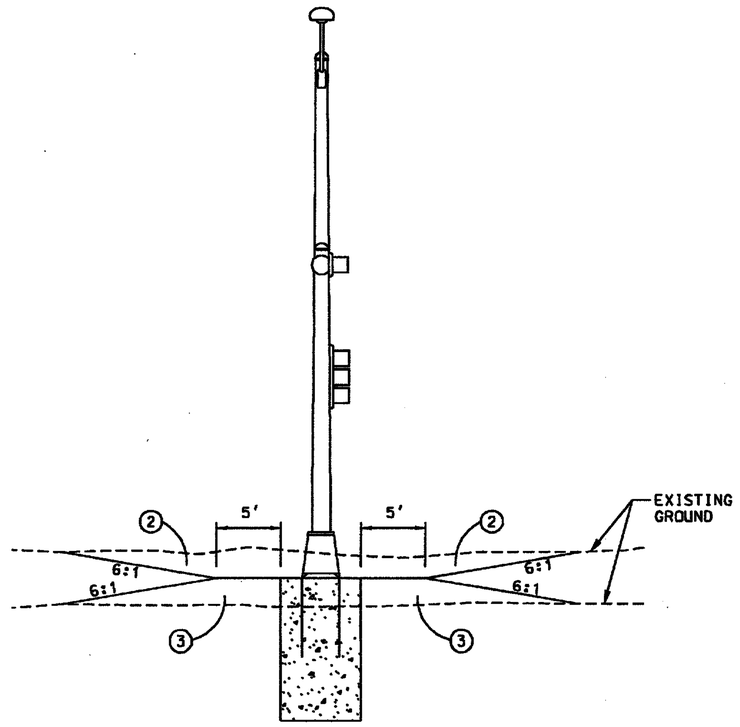

SECTION B

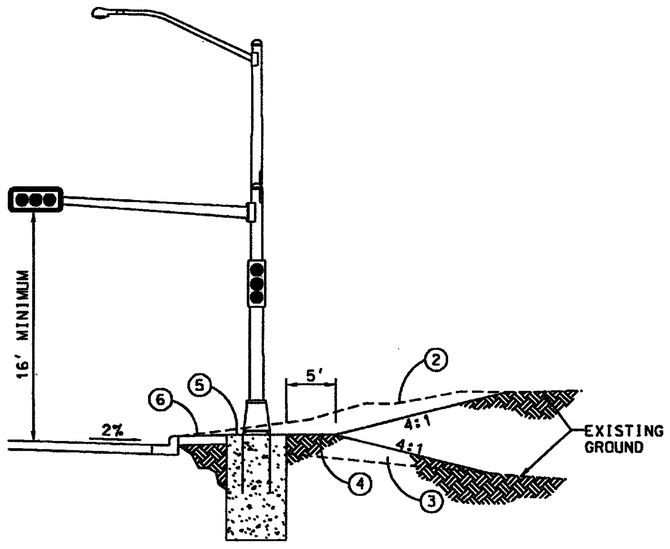

SECTION A (W/SIDEWALK)

MASTARM FOUNDATION GRADING DETAIL

NOTES

1. ALL GRADING FOR MASTARM INSTALLATION SHALL BE WITHIN THE RIGHT-OF-WAY UNLESS OTHERWISE SPECIFIED.
2. THE CONTRACTOR AND PROJECT MANAGER SHALL AGREE ON THE FOOTING ELEVATION BEFORE INSTALLATION.

KEYED NOTES

(1) GRADE TO NEW MASTARM FOUNDATION

(2) EXCAVATE AS REQUIRED TO BUILD NEW MASTARM FOUNDATION

(3) EMBANKMENT AS REQUIRED TO BUILD NEW MASTARM FOUNDATION

(4) GRADE TO DRAIN AWAY FROM NEW MASTARM

(5) APPROXIMATE FOUNDATION ELEVATION SHOWN ON SIGNAL PLANS

(6) FOUNDATION TO BE OUTSIDE OF SIDEWALK AREA AND SHALL CONFORM WITH ADA

NO.	DATE	REV. BY	DESCRIPTION

REVISIONS (OR CHANGE NOTICES)

NEW MEXICO
DEPARTMENT OF TRANSPORTATION
STANDARD DRAWING

MASTARM FOUNDATION
GRADING DETAIL

APPROVED _____ DESIGN ENGINEER 1-19-05 DATE

DESIGNED BY ___ DRAWN BY ___ CHECKED BY ___

708S-03-1/1

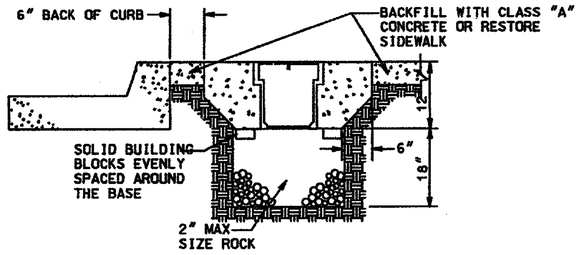

TYPICAL PULL BOX INSTALLATION

NOTE: SEE "CONCRETE COLLAR DETAILS"

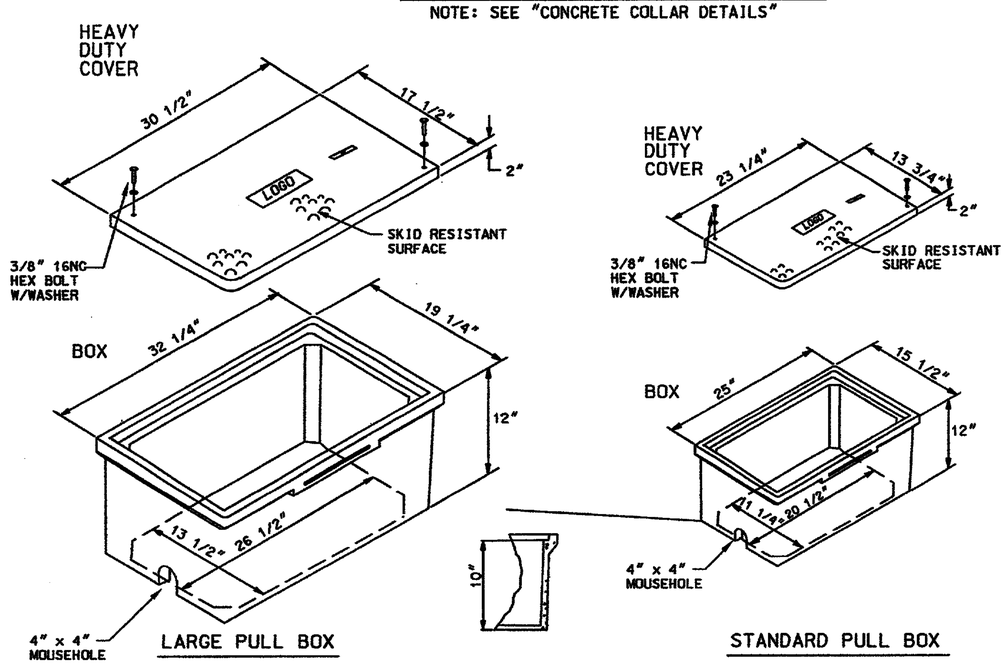

PULL BOX DETAILS

NOTES FOR HEAVY DUTY REINFORCED POLYMER MORTAR PULL BOX AND COVERS

1. MATERIAL TO BE AN AGGREGATE CONSISTING OF SAND AND GRAVEL BOUND TOGETHER WITH A POLYMER AND REINFORCED WITH CONTINUOUS WOVEN GLASS STRANDS. THE MATERIAL MUST HAVE THE FOLLOWING MECHANICAL PROPERTIES: COMPRESSIVE STRENGTH – 11,000 PSI. TENSILE STRENGTH – 1,700 PSI. FLEXURAL STRENGTH – 7,500 PSI.
2. ALL PULL BOX COVERS SHALL BE HEAVY DUTY REINFORCED POLYMER MORTAR. HAVING A SERVICE LOAD OF 22,568 LBS. OVER 10" SQUARE (225 PSI).
3. PULL BOX TYPE AND LOGO SHALL BE APPROVED BY THE PROJECT MANAGER.
4. THE DIMENSIONS OF THE PULL BOXES SHOWN ARE NOMINAL DIMENSIONS AND MAY VARY AS TO THE MANUFACTURER'S RECOMMENDATIONS. ALL DIMENSIONS SHALL BE VERIFIED BY THE PROJECT MANAGER.
5. ELECTRICAL PULL BOX (STANDARD) SHALL BE A HEAVY DUTY REINFORCED POLYMER MORTAR PULL BOX AND COVER MEASURING 13 3/4" X 23 1/4" X 2".

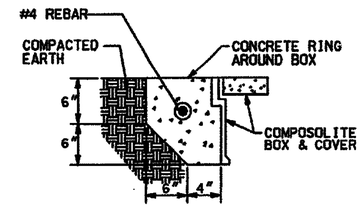

IN COMPACTED EARTH

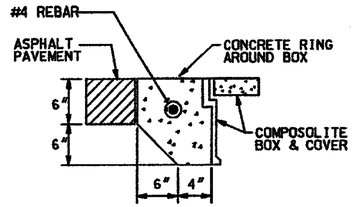

IN ASPHALT PAVEMENTS

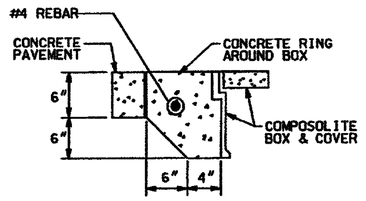

IN CONCRETE PAVEMENTS

CONCRETE COLLAR DETAIL

NOTE: THE CONCRETE COLLAR FOR THE PULL BOXES WILL BE PAID FOR UNDER THE CONTRACT ITEM FOR ELECTRICAL PULL BOX AND NO OTHER MEASUREMENT OR PAYMENT WILL BE MADE THEREFOR.

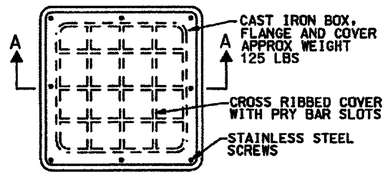

PLAN

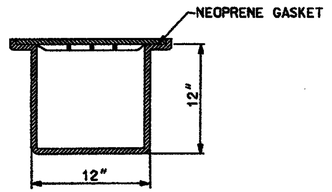

SECTION A-A

METAL PULL BOX

NO.	DATE	REV. BY	DESCRIPTION

REVISIONS (OR CHANGE NOTICES)

NEW MEXICO
DEPARTMENT OF TRANSPORTATION
STANDARD DRAWING

PULL BOX DETAILS

APPROVED _____ DESIGN ENGINEER 12-22-04 DATE

DESIGNED BY___ DRAWN BY___ CHECKED BY___

710S-01-1/1

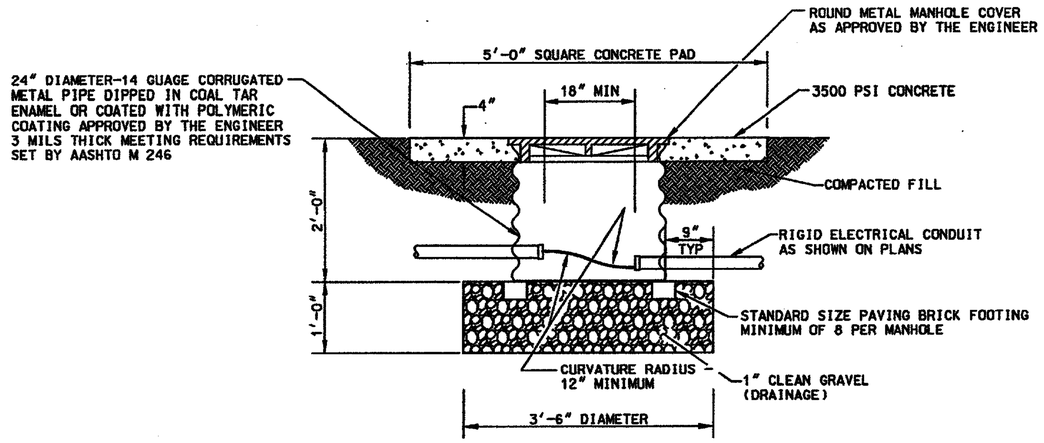

TRAFFIC SIGNAL MANHOLE (TYPICAL)
NEW CONDUIT INSTALLATION

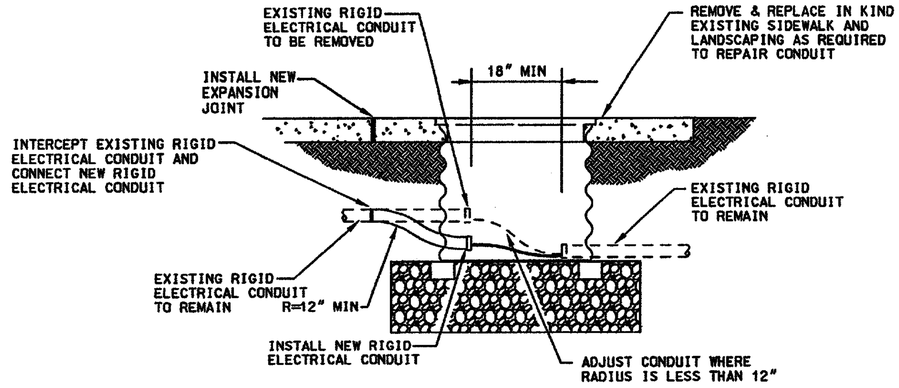

TRAFFIC SIGNAL MANHOLE (TYPICAL)
RETROFIT INSTALLATION

NOTES:

1. TRAFFIC SIGNAL MANHOLE TO BE CONSTRUCTED IN AREAS NOT NORMALLY ACCESSIBLE TO VEHICULAR TRAFFIC.

NO.	DATE	REV. BY	DESCRIPTION

REVISIONS (OR CHANGE NOTICES)

NEW MEXICO
DEPARTMENT OF TRANSPORTATION
STANDARD DRAWING

TRAFFIC MANHOLE
DETAILS

APPROVED _____ DESIGN ENGINEER 12-22-04 DATE

DESIGNED BY ___ DRAWN BY ___ CHECKED BY ___

710S-02-1/1

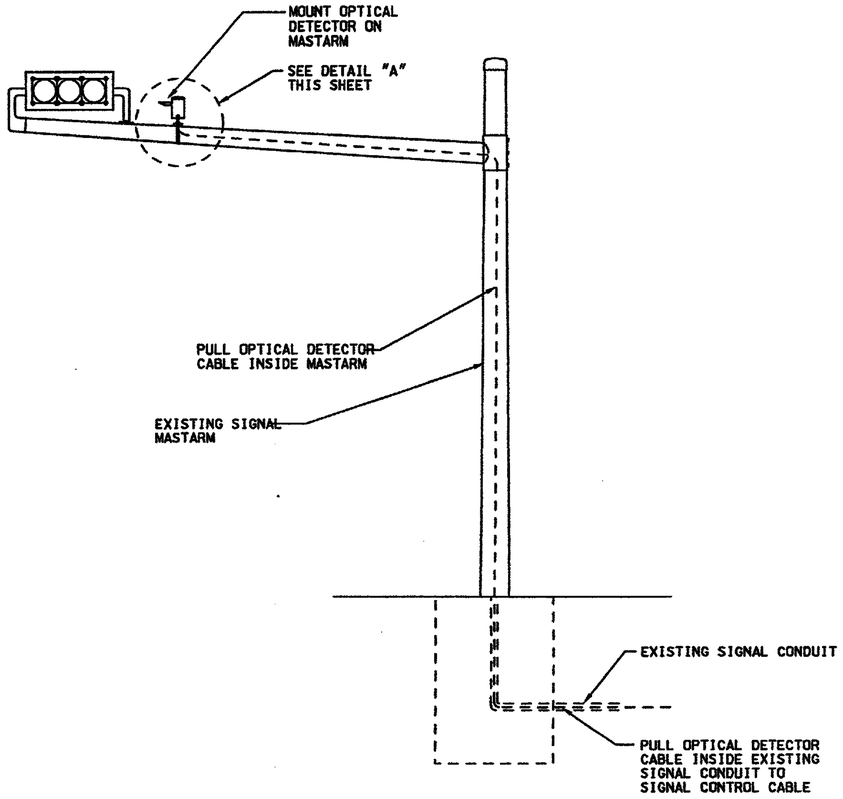

TYPICAL OPTICAL DETECTOR INSTALLATION-MASTARM

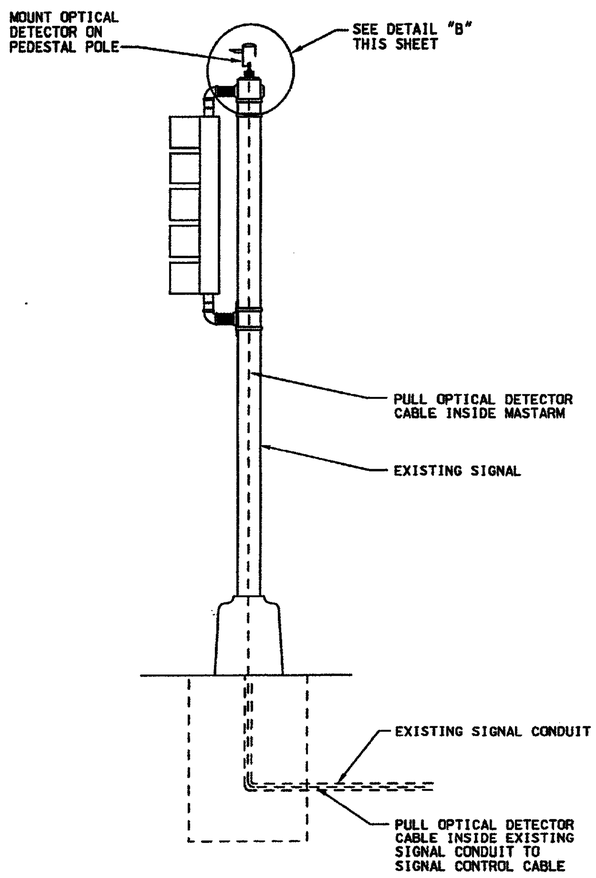

NOTES:

1. ALL OPTICAL DETECTOR MOUNTING HARDWARE SHALL CONFORM TO OPTICAL DETECTOR MANUFACTURER'S REQUIREMENTS.

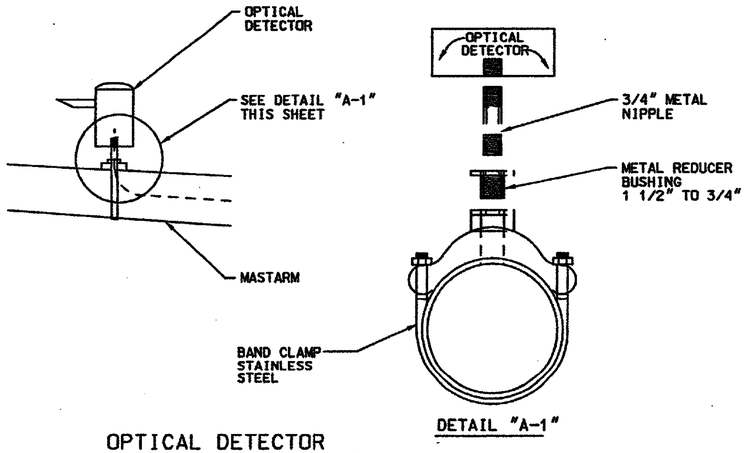

OPTICAL DETECTOR MOUNTING - DETAIL "A"

TYPICAL OPTICAL DETECTOR INSTALLATION - PEDESTAL POLE

NOTE: OPTICAL DETECTOR SHALL ONLY BE MOUNTED ON PEDESTAL POLES WHEN THERE IS NO MASTARM.

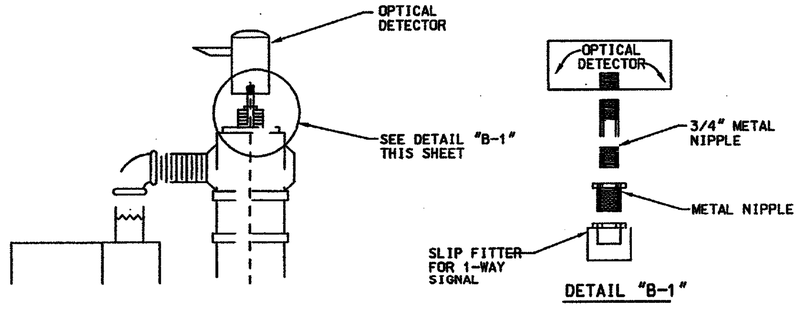

OPTICAL DETECTOR MOUNTING - DETAIL "B"

NO.	DATE	REV. BY	DESCRIPTION

REVISIONS (OR CHANGE NOTICES)

NEW MEXICO
DEPARTMENT OF TRANSPORTATION
STANDARD DRAWING

OPTICAL DETECTOR
INSTALLATION DETAILS

APPROVED _____ (DESIGN ENGINEER) 12-22-04 DATE

DESIGNED BY___ DRAWN BY___ CHECKED BY___

713S-01-1/1

SUMMARY
FILENAME

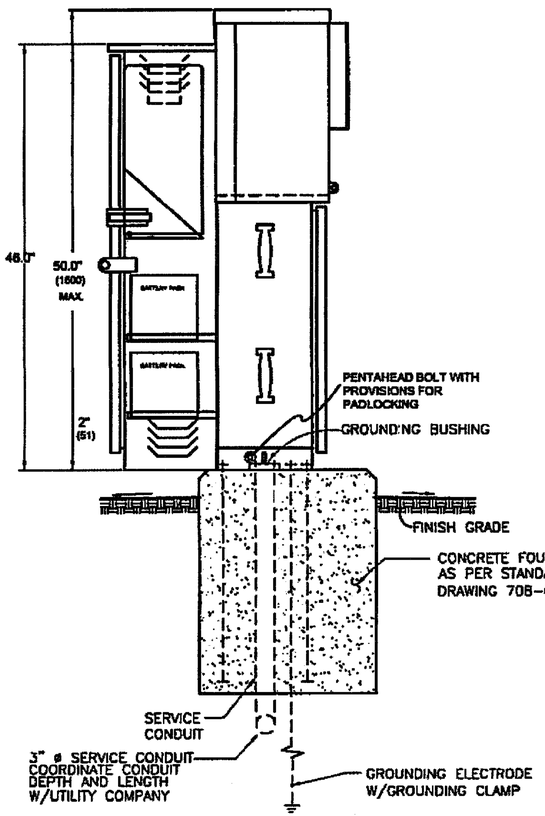

LEFT SIDE

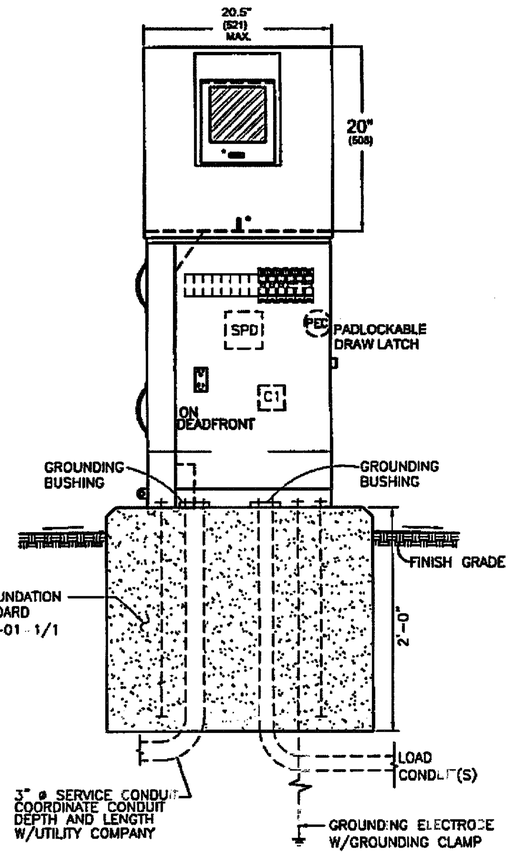

FRONT VIEW

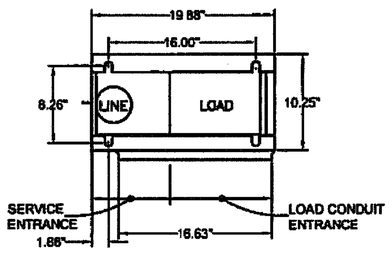

BASE PLAN

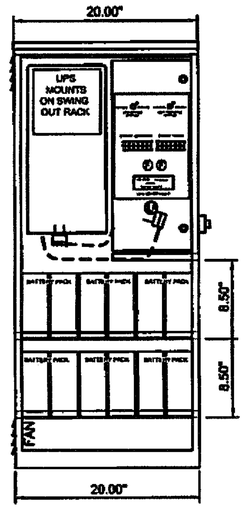

REAR VIEW

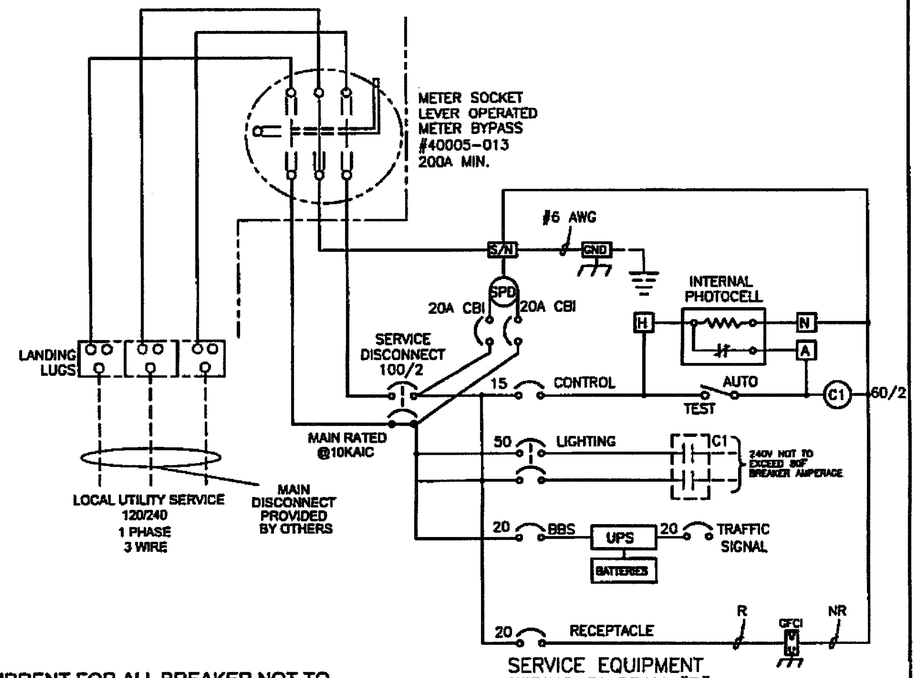

SERVICE EQUIPMENT
WIRING DIAGRAM "B"

NOTE: LOAD CURRENT FOR ALL BREAKER NOT TO EXCEED 80% BREAKER AMPERAGE

ENCLOSURE CONSTRUCTION NOTES

1. EXTERIOR, 1/8" ALUMINUM, AND INTERIOR 14 GA. COLD ROLLED STEEL ELECTRICALLY WELDED AND REINFORCED WHERE REQUIRED.
2. CONSTRUCTION WILL BE NEMA 3R, RAIN TIGHT AND DUST TIGHT.
3. ALL NUTS, BOLTS AND SCREWS WILL BE STAINLESS STEEL.
4. NUTS, BOLTS & SCREWS WILL NOT BE VISIBLE FROM OUTSIDE OF ENCLOSURE
5. NAMEPLATES WILL BE PROVIDED AS REQUIRED.
6. CONTROL WIRING WILL BE MARKED AT BOTH ENDS BY PERMANENT WIRE MARKERS.
7. A PLASTIC COVERED WIRING DIAGRAM WILL BE ATTACHED TO THE INSIDE OF THE FRONT DOOR.
8. ENCLOSURE WILL BE FACTORY WIRED AND CONFORM TO REQUIRED NEMA AND US 508A STANDARDS.
9. CIRCUIT BREAKERS SHALL BE CABLE-INCABLE-OUT WITH LINE ON TOP & LOAD ON THE BOTTOM. HANDLE POSITION UP = "ON", MIDDLE = "TRIPPED", DOWN = "OFF".
10. CONCRETE FOUNDATIONS INCLUDING EXCAVATION AND BACKFILL, CONCRETE AND ANCHOR BOLTS, COMPLETE IN PLACE,WILL BE CONSIDERED INCIDENTAL TO THE METER PEDESTAL.

DESIGNER SPECIFY THE FOLLOWING ON YOUR PLANS:

POWDER COAT COLORS

- ☐ WHITE
- ☐ RANCH GREEN
- ☐ MINT GREEN
- ☐ OTHER .....
- ☐ CAMEL

PHOTO ELECTRIC CELL

- ☐ ON LIGHT POLE
- ☐ IN SERVICE CABINET

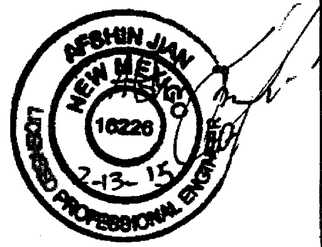

NO.	DATE	REV. BY	DESCRIPTION
			REVISIONS (OR CHANGE NOTICES)

NEW MEXICO
DEPARTMENT OF TRANSPORTATION
STANDARD DRAWING

SIGNAL & LIGHTING
METER PEDESTAL
WITH UPS (DIAGRAM "B")
AND ELECTRICAL SCHEMATIC

APPROVED _____ DESIGN ENGINEER _____ DATE

DESIGNED BY___ DRAWN BY ___ CHECKED BY ___

706S-04-1/2 SHEET 1 OF 2

edd_lrf/preliminary drawings & docs/Signal_Lighting Non_PSE_Design/Details by TESCO/AutoCAD/706S-04-1OF2.DWG

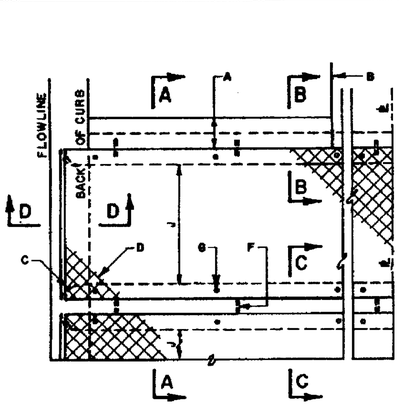

PLAN
SINGLE AND OR MULTIPLE CULVERT

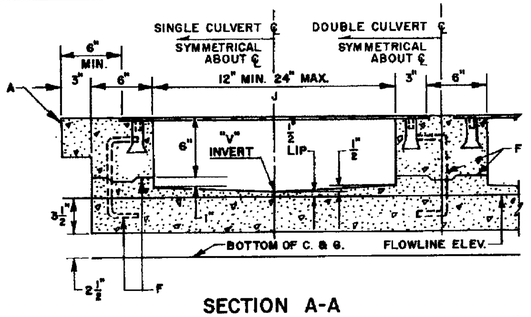

SECTION A-A

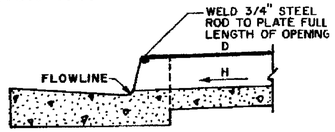

SECTION D-D

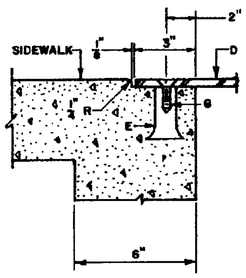

SECTION B-B

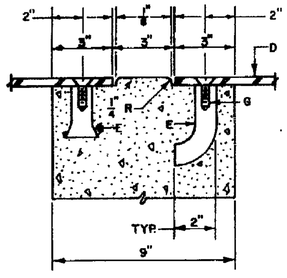

SECTION C-C

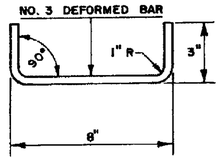

DOWEL DETAIL

GENERAL NOTES:

1. PLACING OF DRAIN THRU EXIST. SIDEWALK AND CURB & GUTTER REQUIRES THAT ENTIRE SIDEWALK AND C & G STONES BE REMOVED AND REPLACED AS DETAILED HEREIN.
2. BOTTOM SLAB OF CULVERT SHALL BE POURED MONOLITHICALLY WITH NEW GUTTER.
3. THE INVERT SHALL BE TROWELED TO PRODUCE A HARD POLISHED SURFACE OF MAX DENSITY AND SMOOTHNESS. INVERT SHALL BE V-SHAPED TO WITHIN 3" OF OUTLET, THEN WARPED TO PARALLEL FLOWLINE AT OUTLET, UNLESS OTHERWISE SHOWN.
4. ALL EXPOSED CONC. SURFACE SHALL MATCH GRADE, COLOR, FINISH AND SCORING OF ADJACENT CURB AND SIDEWALK.
5. SIDEWALK REPLACED DURING CONSTRUCTION SHALL BE POURED MONOLITHICALLY WITH CULVERT WALLS.
6. IF ROD ANCHORS ARE USED, DRILL & TAP FOR F.H. MACHINE SCREW. ATTACH ANCHORS TO PLATE AND SECURE PLATE IN PLACE PRIOR TO POURING OF WALLS.
7. LENGTH OF EACH PLATE SHALL BE SUCH THAT THE WEIGHT WILL NOT EXCEED 300 LBS. AND SHALL BE STRESS RELIEVED AFTER FABRICATION. CLEAN SURFACE OF PLATE AND FRAMING MEMBERS AND PAINT W/ ONE SHOP COAT RED OXIDE AND TWO FINISH COATS ALUMINUM PAINT (AASHTO M 69).
8. THE CITY WILL NOT ASSUME RESPONSIBILITY FOR MAINTENANCE OF ANY SIDEWALK CULVERT INSTALLED BY OR FOR PRIVATE PROPERTY OWNERS.

CONSTRUCTION NOTES:

A. MATCH NEAREST CONTROL JOINT, INSTALL 1/2" EXPANSION JOINT.
B. EDGE OF SIDEWALK OR SETBACK (VARIABLE).
C. 3" RADIUS (TYPICAL).
D. 3/8" CHECKERED STEEL PLATE (PAINT PER NOTE 7, ABOVE).
E. FOR SECURING PLATE USE 1"X 5" S.S. ROD ANCHOR, "RED HEAD MULTI-SET II SAM-38 ANCHOR" OR APPROVED EQUAL. INSTALL PER MANUFACTURER'S INSTRUCTIONS AT MAX. 24" O.C., A MINIMUM OF 2 PER SIDE AND ONE WITHIN 6" OF EACH END.
F. CONSTRUCTION JOINT IS OPTIONAL. IF USED, SPACE DOWELS AT 18" O.C. MAX., 1 1/2" MINIMUM FROM FACE OF CONCRETE.
G. 3/8" - 16 x 1 1/4" COUNTERSUNK, F.H., STAINLESS STEEL, MACHINE SCREW.
H. SLOPE 1/4" PER FT. MIN.
J. DRAIN WIDTH PER PLAN (12" MIN., 24" MAX).

CITY OF ALBUQUERQUE

REVISIONS

DRAINAGE
SIDEWALK CULVERT
WITH STEEL PLATE TOP
DWG. 2236 AUG.1986

SIDEWALK CULVERT DETAIL
NTS

NOTE:
SIDEWALK CULVERT SHALL BE CONSIDERED INCIDENTAL TO ITEM NO. 608004, CONCRETE SIDEWALK 4"

JAMES H. BUCKMAN NEW MEXICO 13082 REGISTERED PROFESSIONAL ENGINEER 10/7/15

NO.	DESCRIPTION	DATE	BY
3			
2			
1			

REVISIONS (OR CHANGE NOTICES)

CITY OF SANTA FE

CERRILLOS ROAD PHASE IIC
CAMINO CARLOS REY TO
LLANO STREET
SANTA FE COUNTY

DRAINAGE SIDEWALK CULVERT
WITH STEEL PLATE TOP

SCALE
NOT TO SCALE

DESIGNED BY: PB	DRAWN BY: PB	CHECKED BY: JB
DATE: 08/07/15	DATE: 08/07/15	DATE: 08/07/15

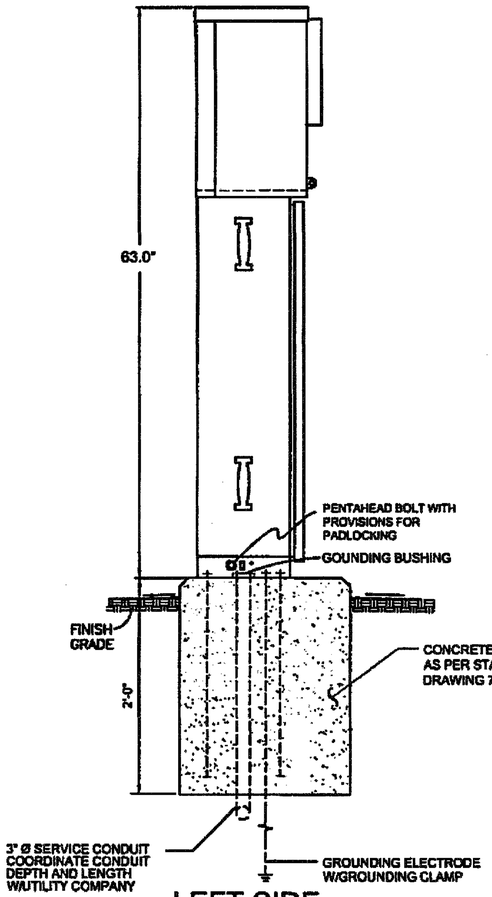

LEFT SIDE

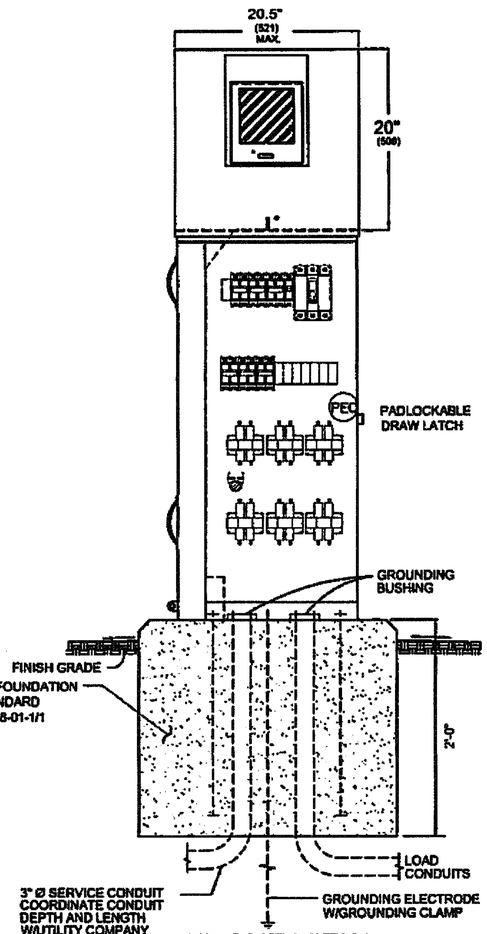

FRONT VIEW

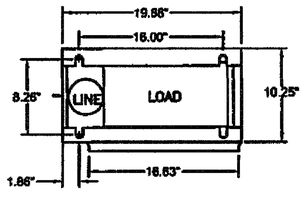

BASE PLAN

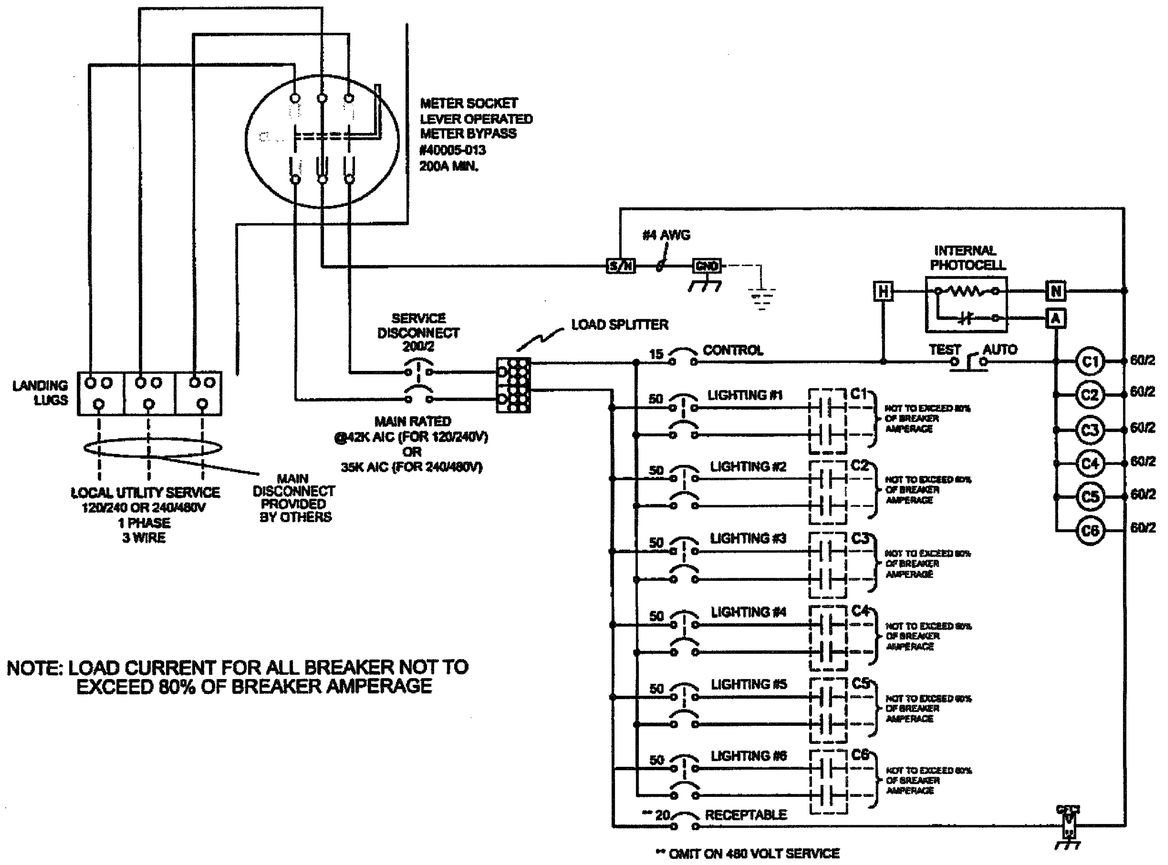

NOTE: LOAD CURRENT FOR ALL BREAKER NOT TO EXCEED 80% OF BREAKER AMPERAGE

SERVICE EQUIPMENT
WIRING DIAGRAM "L6M"

ENCLOSURE CONSTRUCTION NOTES

1. EXTERIOR, 1/8" ALUMINUM AND INTERIOR 14 GA. COLD ROLLED STEEL ELECTRICALLY WELDED AND REINFORCED WHERE REQUIRED.
2. CONSTRUCTION WILL BE NEMA 3R, RAIN TIGHT AND DUST TIGHT.
3. ALL NUTS, BOLTS AND SCREWS WILL BE STAINLESS STEEL.
4. NUTS, BOLTS & SCREWS WILL NOT BE VISIBLE FROM OUTSIDE OF ENCLOSURE.
5. NAMEPLATES WILL BE PROVIDED AS REQUIRED.
6. CONTROL WIRING WILL BE MARKED AS BOTH ENDS BY PERMANENT WIRE MARKERS.
7. A PLASTIC COVERED WIRING DIAGRAM WILL BE ATTACHED TO THE INSIDE OF THE FRONT DOOR.
8. ENCLOSURE WILL BE FACTORY WIRED AND CONFORM TO REQUIRED NEMA AND US 508A STANDARDS.
9. CIRCUIT BREAKERS SHALL BE CABLE-IN/CABLE-OUT WITH LINE ON TOP & LOAD ON THE BOTTOM. HAND POSITION UP = "ON", MIDDLE= "TRIPPED", DOWN = "OFF".
10. CONCRETE FOUNDATIONS INCLUDING EXCAVATION AND BACKFILL, CONCRETE, AND ANCHOR BOLTS COMPLETE IN PLACE, WILL BE CONSIDERED INCIDENTAL TO THE METER PEDESTAL.

DESIGNER SPECIFY THE FOLLOWING ON YOUR PLANS.

POWDER COAT COLORS
- ☐ WHITE
- ☐ MINT GREEN
- ☐ CAMEL
- ☐ RANCH GREEN
- ☐ OTHER

PHOTO ELECTRIC CELL
- ☐ ON LIGHT POLE
- ☐ IN SERVICE CABINET

VOLTAGE SOURCE (SERVICE)
- ☐ 120/240
- ☐ 240/480

AFSHIN JIAN NEW MEXICO 16226 LICENSED PROFESSIONAL ENGINEER 2_13_15

NO.	DATE	REV. BY	DESCRIPTION

REVISIONS (OR CHANGE NOTICES)

NEW MEXICO
DEPARTMENT OF TRANSPORTATION
STANDARD DRAWING

LIGHTING CABINET
DIAGRAM L6M
6 CIRCUIT, METERED

APPROVED _____ DESIGN ENGINEER _____ DATE

DESIGNED BY___ DRAWN BY ___ CHECKED BY ___

706L-08-1/2 SHEET 1 OF 2

edd_trf\preliminary drawings & docs\Signal_Lighting\Non_PSE_Design\Signal & Lighting Details by TESCO\AutoCAD\706L-08-1of2.dwg

PARSONS BRINCKERHOFF

CITY OF SANTA FE	SHEET
NEW MEXICO PROJECT NO.	NO.
CN S100130	14–1

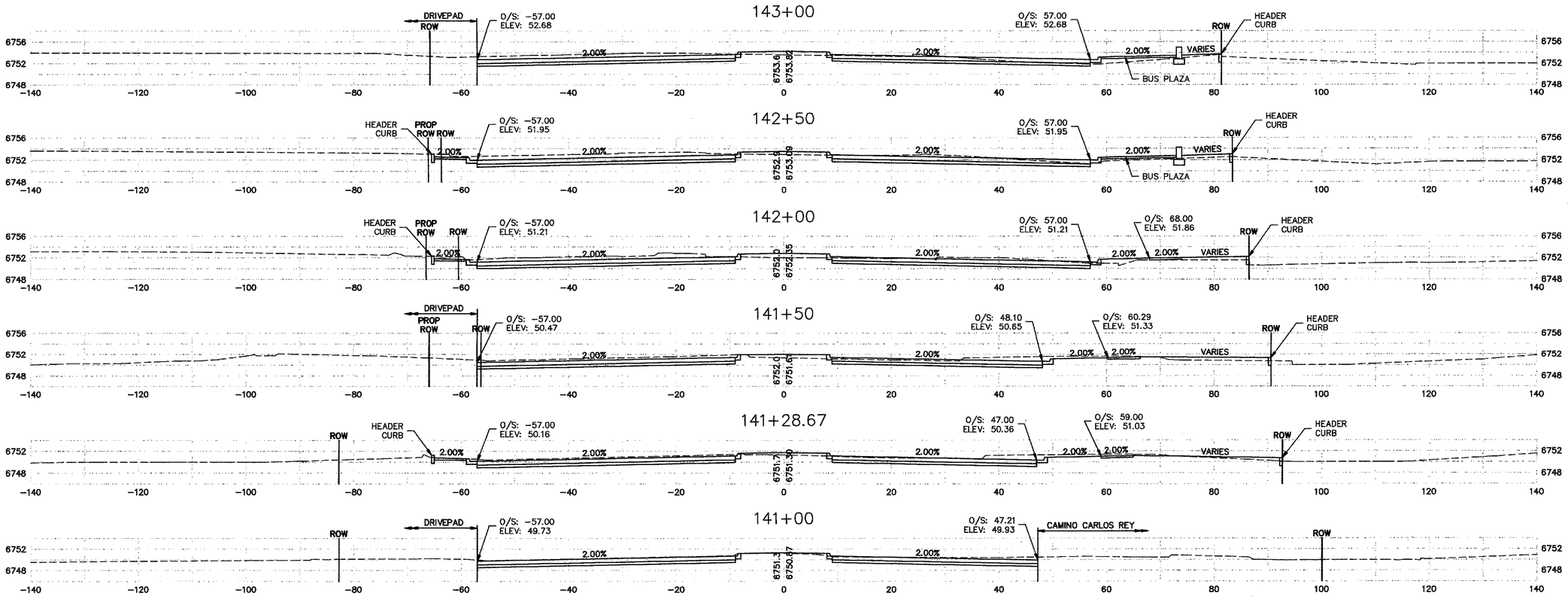

GENERAL NOTES

1. ROADWAY CROSS SECTIONS ARE FOR INFORMATIONAL PURPOSES ONLY.
2. SEE CERRILLOS ROADWAY TYPICAL SECTIONS, PLAN & PROFILES, AND CERRILLOS ROAD LAYOUT PLANS FOR ADDITIONAL INFORMATION.
3. SEE CERRILLOS ROAD LAYOUT PLANS FOR MEDIAN LAYOUT AND GRADING INFORMATION.
4. SEE CERRILLOS ROAD PHASE IIC FINAL RIGHT–OF–WAY MAPS (S100130) DATED APRIL 4, 2014 FOR ADDITIONAL RIGHT–OF–WAY AND TCP INFORMATION.
5. ADD 6700 TO TRUNCATED ELEVATIONS FOR ACTUAL ELEVATION.

NO.	DESCRIPTION	DATE	BY
3			
2			
1			

REVISIONS (OR CHANGE NOTICES)

SCALE
HORIZ. 1"=10'
VERT. 1"=10'

DESIGNED BY: PB	DRAWN BY: PB	CHECKED BY: JB
DATE: 08/07/15	DATE: 08/07/15	DATE: 08/07/15

CITY OF SANTA FE

CERRILLOS ROAD PHASE IIC
CAMINO CARLOS REY TO
LLANO STREET
SANTA FE COUNTY

CROSS SECTIONS
CERRILLOS ROAD

PARSONS BRINCKERHOFF

CITY OF SANTA FE	SHEET
NEW MEXICO PROJECT NO.	NO.
CN S100130	14–2

145+50

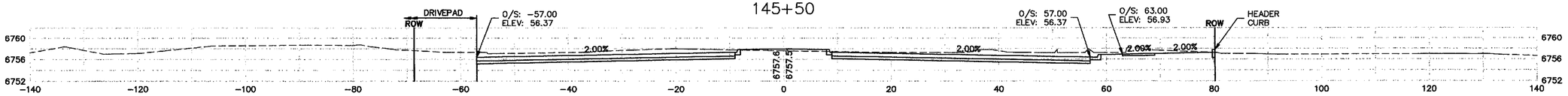

145+00

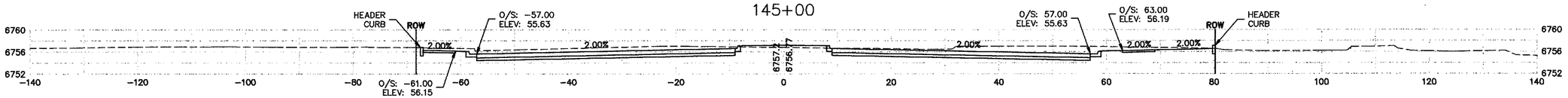

144+50

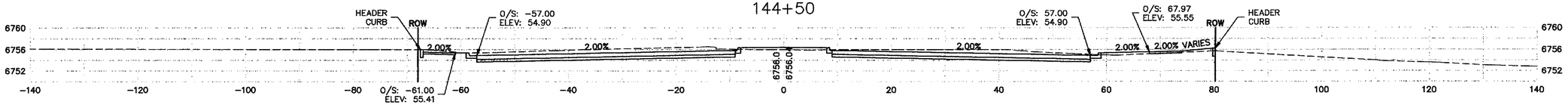

144+00

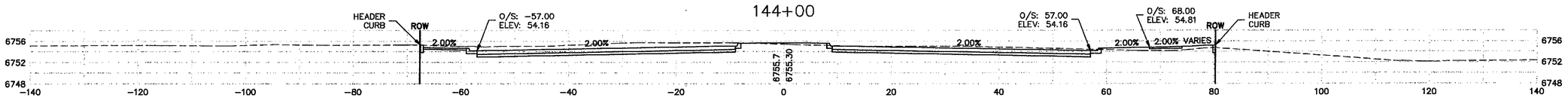

143+72.59

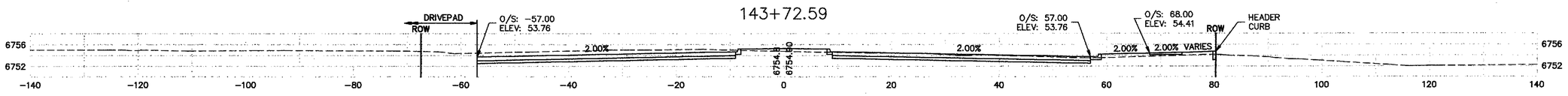

143+50

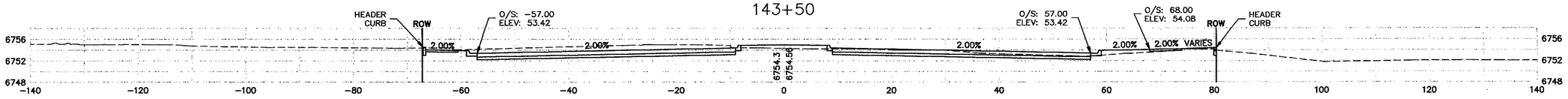

GENERAL NOTES

1. ROADWAY CROSS SECTIONS ARE FOR INFORMATIONAL PURPOSES ONLY.
2. SEE CERRILLOS ROADWAY TYPICAL SECTIONS, PLAN & PROFILES, AND CERRILLOS ROAD LAYOUT PLANS FOR ADDITIONAL INFORMATION.
3. SEE CERRILLOS ROAD LAYOUT PLANS FOR MEDIAN LAYOUT AND GRADING INFORMATION.
4. SEE CERRILLOS ROAD PHASE IIC FINAL RIGHT–OF–WAY MAPS (S100130) DATED APRIL 4, 2014 FOR ADDITIONAL RIGHT–OF–WAY AND TCP INFORMATION.
5. ADD 6700 TO TRUNCATED ELEVATIONS FOR ACTUAL ELEVATION.

NO.	DESCRIPTION	DATE	BY
3			
2			
1			

REVISIONS (OR CHANGE NOTICES)

SCALE
HORIZ. 1"=10'
VERT. 1"=10'

DESIGNED BY: PB	DRAWN BY: PB	CHECKED BY: JB
DATE: 08/07/15	DATE: 08/07/15	DATE: 08/07/15

CITY OF SANTA FE

CERRILLOS ROAD PHASE IIC
CAMINO CARLOS REY TO
LLANO STREET
SANTA FE COUNTY

CROSS SECTIONS
CERRILLOS ROAD

J:\33693 Cerrillos Ph IIC\04 Engineering–33693\Plans\14_Sheets\Cerrillos PhIIC_XSections.dwg Oct 07, 2015 – 7:46am Saved By: millernz

N.M. PROJECT NO. CN S100130 SHEET NO. 14–2

PARSONS BRINCKERHOFF

CITY OF SANTA FE	SHEET
NEW MEXICO PROJECT NO.	NO.
CN S100130	14–3

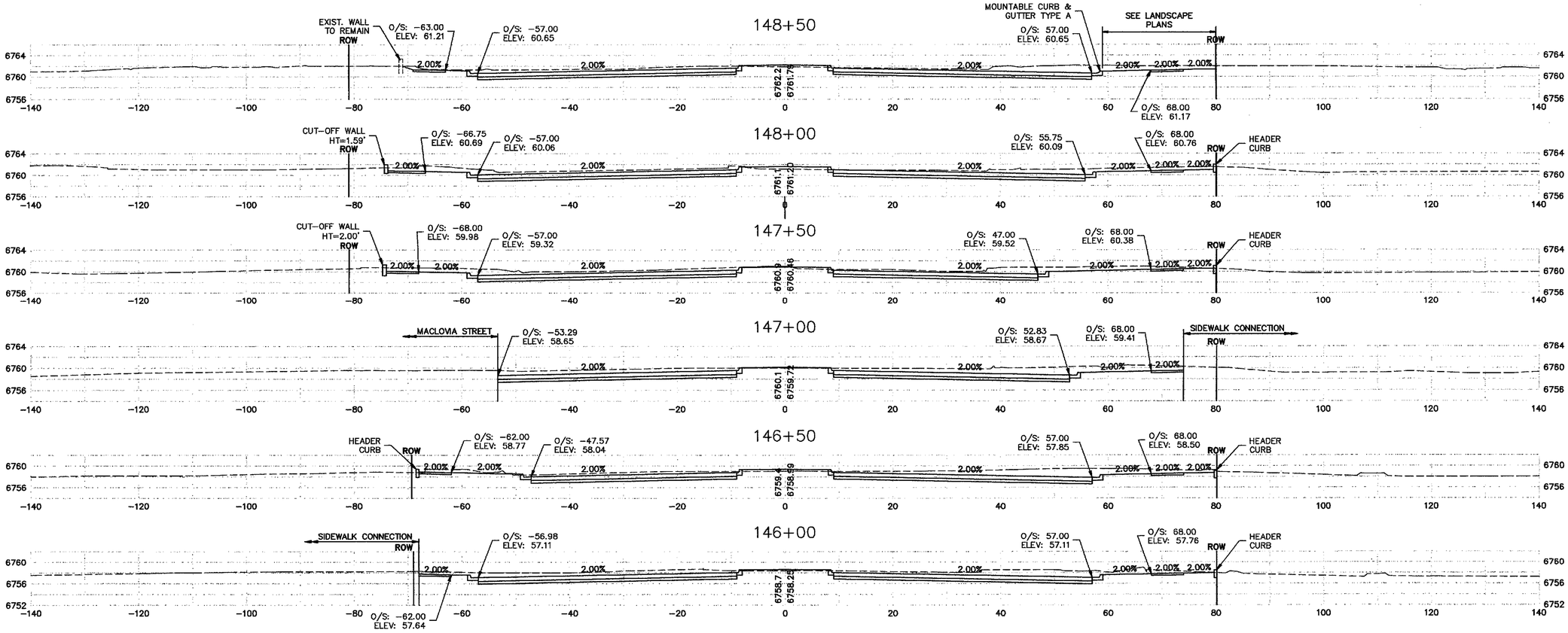

GENERAL NOTES

1. ROADWAY CROSS SECTIONS ARE FOR INFORMATIONAL PURPOSES ONLY.
2. SEE CERRILLOS ROADWAY TYPICAL SECTIONS, PLAN & PROFILES, AND CERRILLOS ROAD LAYOUT PLANS FOR ADDITIONAL INFORMATION.
3. SEE CERRILLOS ROAD LAYOUT PLANS FOR MEDIAN LAYOUT AND GRADING INFORMATION.
4. SEE CERRILLOS ROAD PHASE IIC FINAL RIGHT–OF–WAY MAPS (S100130) DATED APRIL 4, 2014 FOR ADDITIONAL RIGHT–OF–WAY AND TCP INFORMATION.
5. ADD 6700 TO TRUNCATED ELEVATIONS FOR ACTUAL ELEVATION.

NO.	DESCRIPTION	DATE	BY
3			
2			
1			

REVISIONS (OR CHANGE NOTICES)

CITY OF SANTA FE

CERRILLOS ROAD PHASE IIC
CAMINO CARLOS REY TO
LLANO STREET
SANTA FE COUNTY

CROSS SECTIONS
CERRILLOS ROAD

SCALE
HORIZ. 1"=10'
VERT. 1"=10'

DESIGNED BY: PB	DRAWN BY: PB	CHECKED BY: JB
DATE: 08/07/15	DATE: 08/07/15	DATE: 08/07/15

CITY OF SANTA FE	SHEET
NEW MEXICO PROJECT NO.	NO.
CN S100130	14–4

PARSONS BRINCKERHOFF

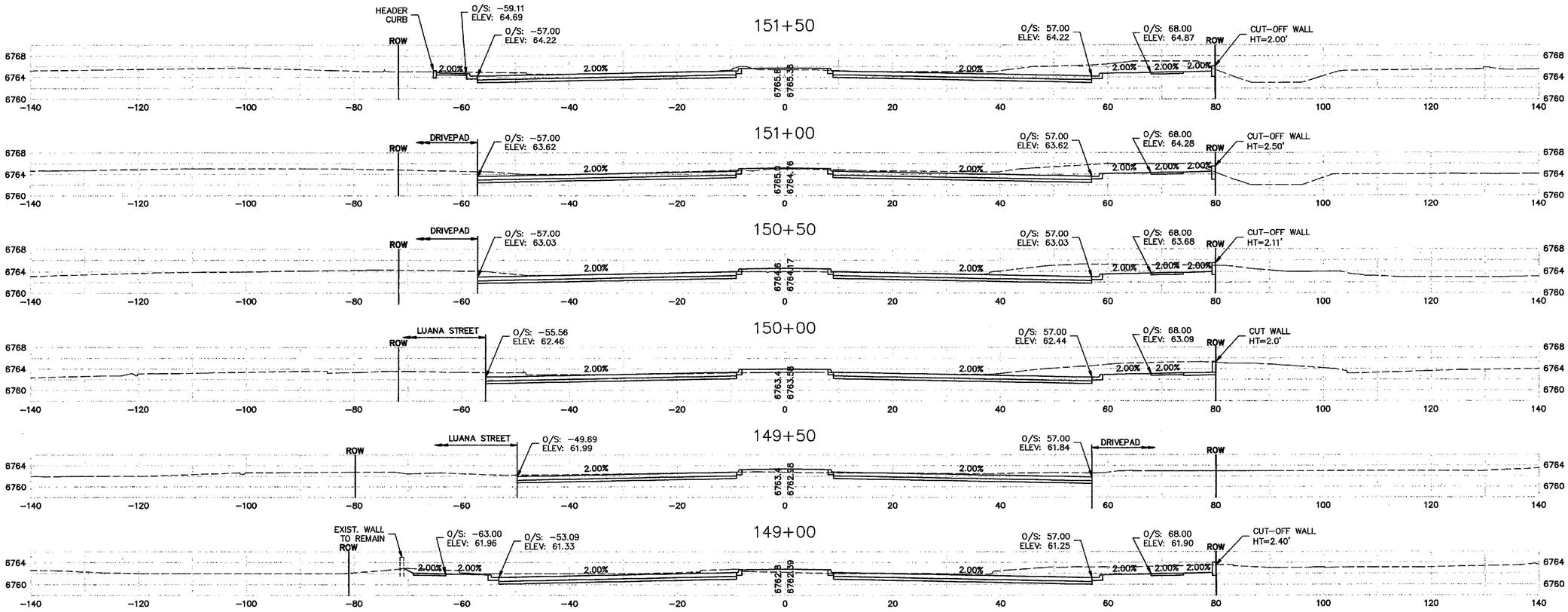

GENERAL NOTES

1. ROADWAY CROSS SECTIONS ARE FOR INFORMATIONAL PURPOSES ONLY.
2. SEE CERRILLOS ROADWAY TYPICAL SECTIONS, PLAN & PROFILES, AND CERRILLOS ROAD LAYOUT PLANS FOR ADDITIONAL INFORMATION.
3. SEE CERRILLOS ROAD LAYOUT PLANS FOR MEDIAN LAYOUT AND GRADING INFORMATION.
4. SEE CERRILLOS ROAD PHASE IIC FINAL RIGHT–OF–WAY MAPS (S100130) DATED APRIL 4, 2014 FOR ADDITIONAL RIGHT–OF–WAY AND TCP INFORMATION.
5. ADD 6700 TO TRUNCATED ELEVATIONS FOR ACTUAL ELEVATION.

NO.	DESCRIPTION	DATE	BY
3			
2			
1			

REVISIONS (OR CHANGE NOTICES)

CITY OF SANTA FE

CERRILLOS ROAD PHASE IIC
CAMINO CARLOS REY TO
LLANO STREET
SANTA FE COUNTY

CROSS SECTIONS
CERRILLOS ROAD

SCALE
HORIZ. 1"=10'
VERT. 1"=10'

DESIGNED BY: PB	DRAWN BY: PB	CHECKED BY: JB
DATE: 08/07/15	DATE: 08/07/15	DATE: 08/07/15

PARSONS BRINCKERHOFF

CITY OF SANTA FE	SHEET
NEW MEXICO PROJECT NO.	NO.
CN S100130	14–5

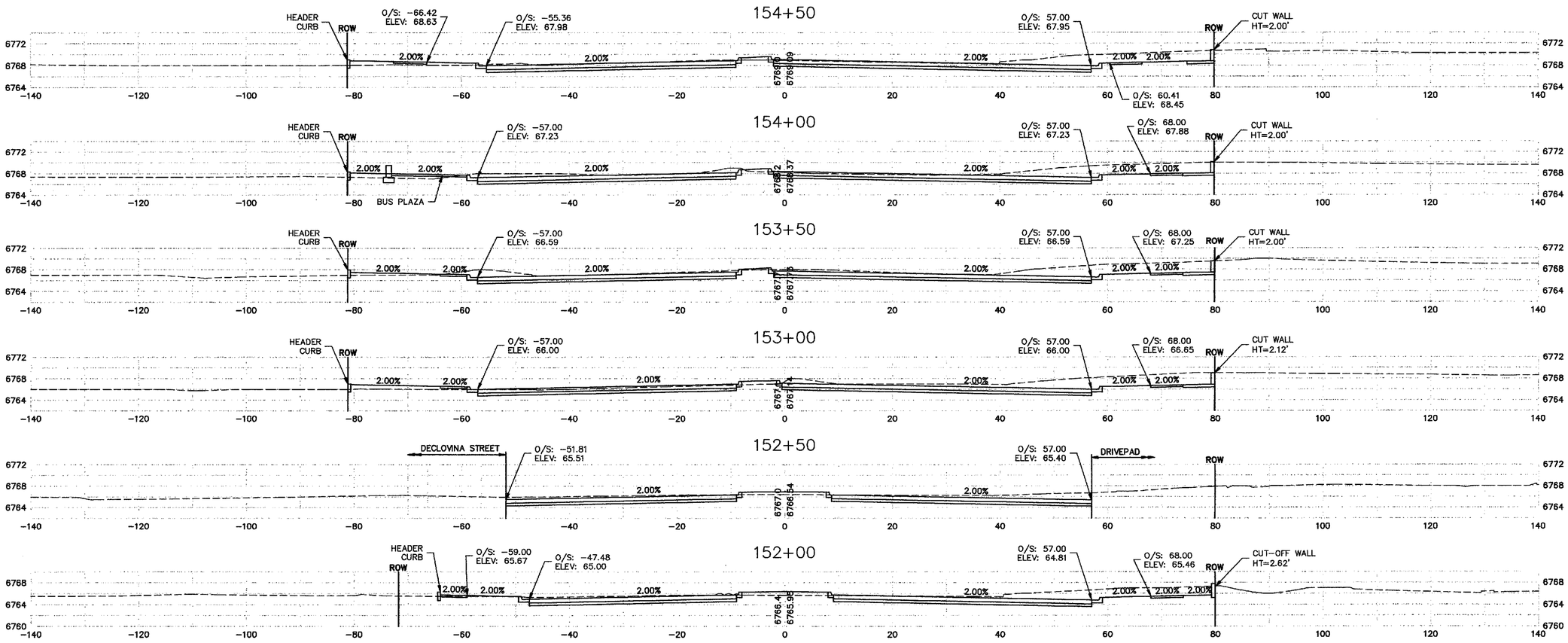

GENERAL NOTES

1. ROADWAY CROSS SECTIONS ARE FOR INFORMATIONAL PURPOSES ONLY.
2. SEE CERRILLOS ROADWAY TYPICAL SECTIONS, PLAN & PROFILES, AND CERRILLOS ROAD LAYOUT PLANS FOR ADDITIONAL INFORMATION.
3. SEE CERRILLOS ROAD LAYOUT PLANS FOR MEDIAN LAYOUT AND GRADING INFORMATION.
4. SEE CERRILLOS ROAD PHASE IIC FINAL RIGHT–OF–WAY MAPS (S100130) DATED APRIL 4, 2014 FOR ADDITIONAL RIGHT–OF–WAY AND TCP INFORMATION.
5. ADD 6700 TO TRUNCATED ELEVATIONS FOR ACTUAL ELEVATION.

NO.	DESCRIPTION	DATE	BY
3			
2			
1			

REVISIONS (OR CHANGE NOTICES)

CITY OF SANTA FE

CERRILLOS ROAD PHASE IIC
CAMINO CARLOS REY TO
LLANO STREET
SANTA FE COUNTY

CROSS SECTIONS
CERRILLOS ROAD

SCALE
HORIZ. 1"=10'
VERT. 1"=10'

DESIGNED BY: PB	DRAWN BY: PB	CHECKED BY: JB
DATE: 08/07/15	DATE: 08/07/15	DATE: 08/07/15

J:\33693 Cerrillos Ph IIC\04 Engineering–33693\Plans\14_Sheets\Cerrillos PhIIC_XSections.dwg Oct 07, 2015 – 7:48am Saved By: millernz

N.M. PROJECT NO. CN S100130 SHEET NO. 14–5

PARSONS BRINCKERHOFF

CITY OF SANTA FE	SHEET
NEW MEXICO PROJECT NO.	NO.
CN S100130	14-6

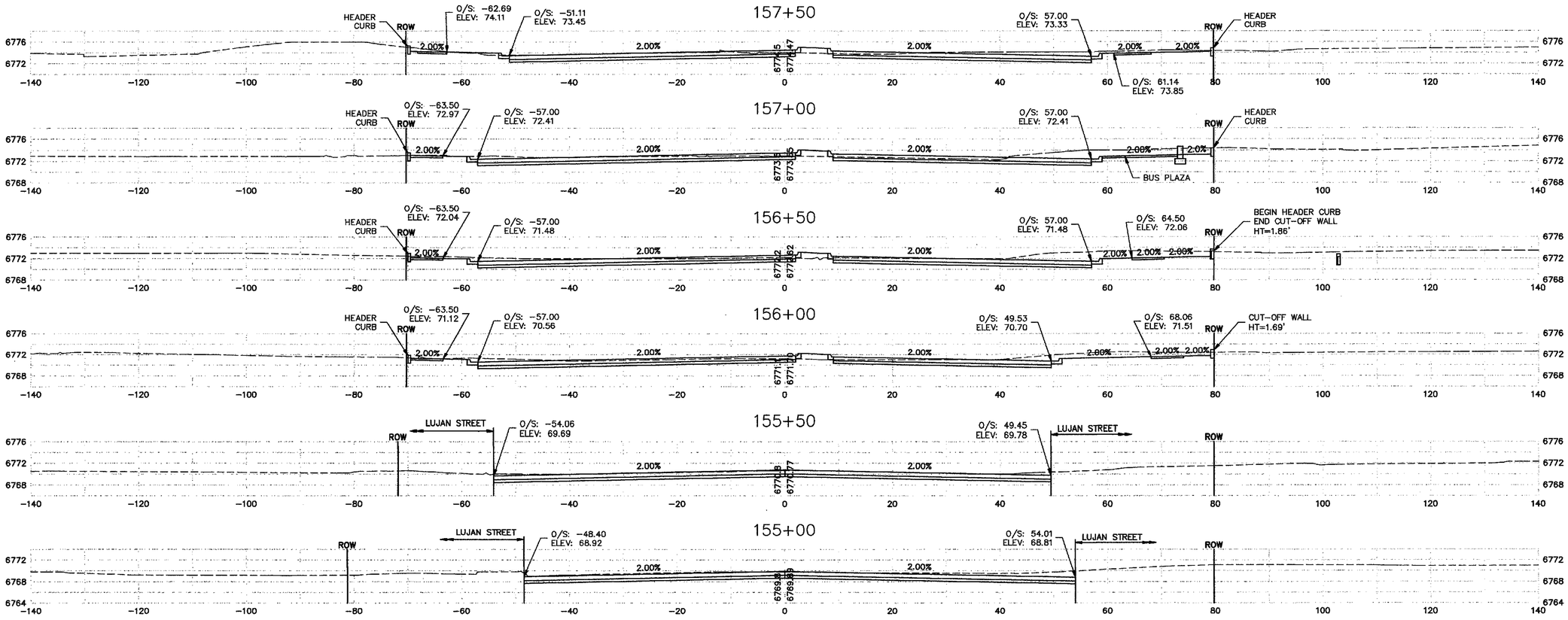

GENERAL NOTES

1. ROADWAY CROSS SECTIONS ARE FOR INFORMATIONAL PURPOSES ONLY.
2. SEE CERRILLOS ROADWAY TYPICAL SECTIONS, PLAN & PROFILES, AND CERRILLOS ROAD LAYOUT PLANS FOR ADDITIONAL INFORMATION.
3. SEE CERRILLOS ROAD LAYOUT PLANS FOR MEDIAN LAYOUT AND GRADING INFORMATION.
4. SEE CERRILLOS ROAD PHASE IIC FINAL RIGHT-OF-WAY MAPS (S100130) DATED APRIL 4, 2014 FOR ADDITIONAL RIGHT-OF-WAY AND TCP INFORMATION.
5. ADD 6700 TO TRUNCATED ELEVATIONS FOR ACTUAL ELEVATION.

NO.	DESCRIPTION	DATE	BY
3			
2			
1			

REVISIONS (OR CHANGE NOTICES)

CITY OF SANTA FE

CERRILLOS ROAD PHASE IIC
CAMINO CARLOS REY TO
LLANO STREET
SANTA FE COUNTY

CROSS SECTIONS
CERRILLOS ROAD

SCALE
HORIZ. 1"=10'

DESIGNED BY: PB	DRAWN BY: PB	CHECKED BY: JB
DATE: 08/07/15	DATE: 08/07/15	DATE: 08/07/15

CITY OF SANTA FE	SHEET
NEW MEXICO PROJECT NO.	NO.
CN S100130	14-7

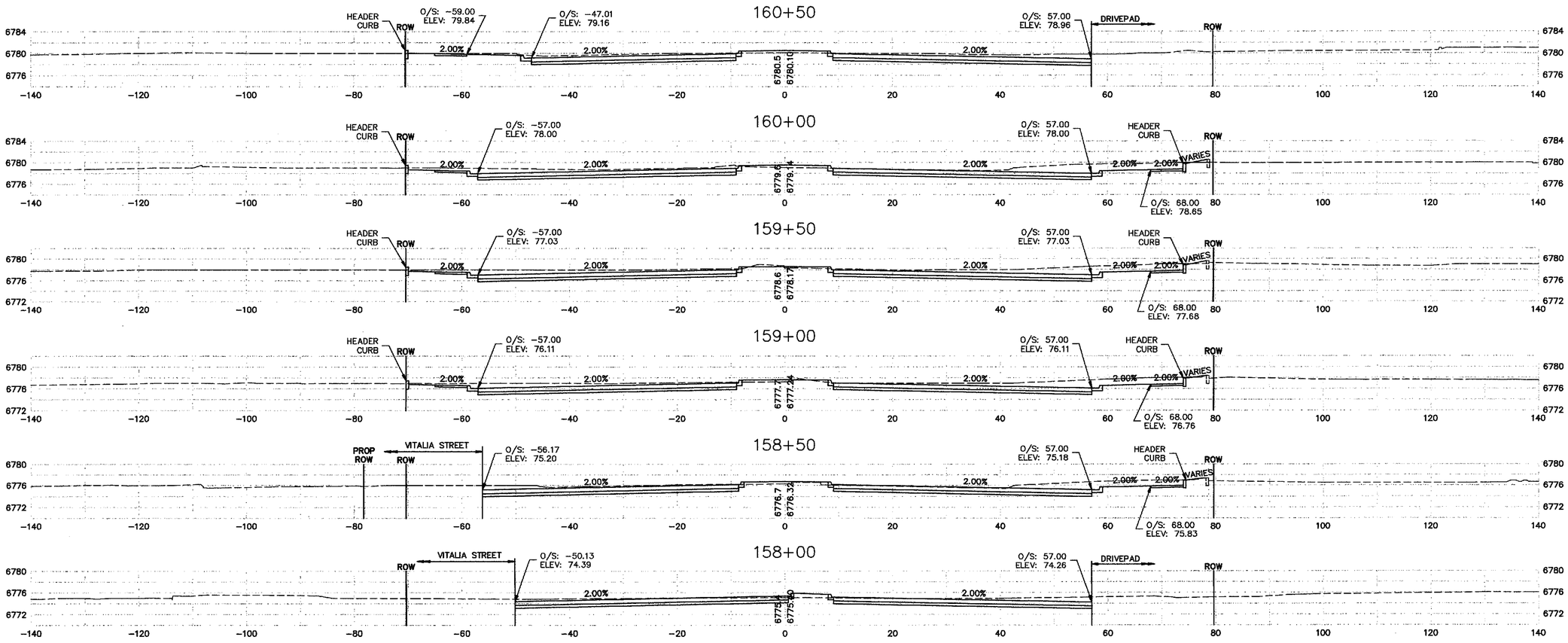

GENERAL NOTES

1. ROADWAY CROSS SECTIONS ARE FOR INFORMATIONAL PURPOSES ONLY.
2. SEE CERRILLOS ROADWAY TYPICAL SECTIONS, PLAN & PROFILES, AND CERRILLOS ROAD LAYOUT PLANS FOR ADDITIONAL INFORMATION.
3. SEE CERRILLOS ROAD LAYOUT PLANS FOR MEDIAN LAYOUT AND GRADING INFORMATION.
4. SEE CERRILLOS ROAD PHASE IIC FINAL RIGHT-OF-WAY MAPS (S100130) DATED APRIL 4, 2014 FOR ADDITIONAL RIGHT-OF-WAY AND TCP INFORMATION.
5. ADD 6700 TO TRUNCATED ELEVATIONS FOR ACTUAL ELEVATION.

NO.	DESCRIPTION	DATE	BY
3			
2			
1			

REVISIONS (OR CHANGE NOTICES)

CITY OF SANTA FE

CERRILLOS ROAD PHASE IIC
CAMINO CARLOS REY TO
LLANO STREET
SANTA FE COUNTY

CROSS SECTIONS
CERRILLOS ROAD

SCALE
HORIZ. 1"=10'

DESIGNED BY: PB	DRAWN BY: PB	CHECKED BY: JB
DATE: 08/07/15	DATE: 08/07/15	DATE: 08/07/15

PARSONS BRINCKERHOFF

CITY OF SANTA FE	SHEET
NEW MEXICO PROJECT NO.	NO.
CN S100130	14-8

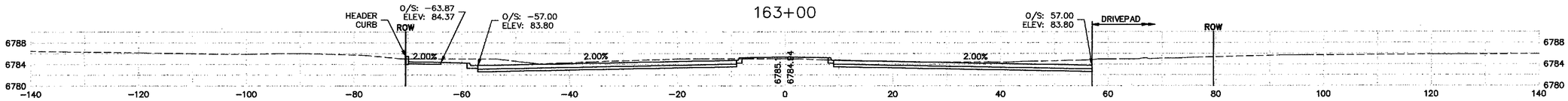

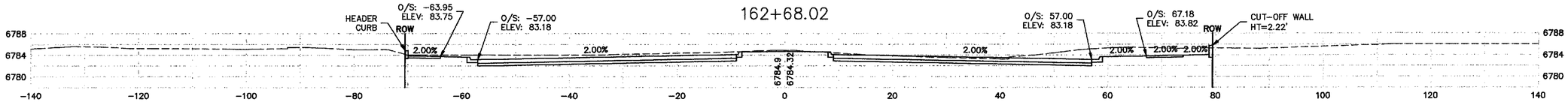

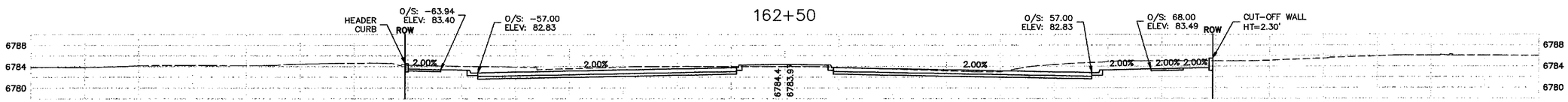

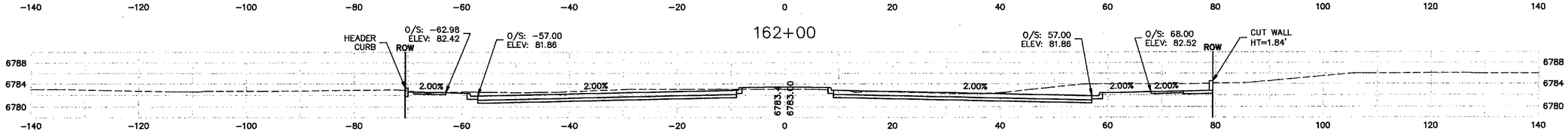

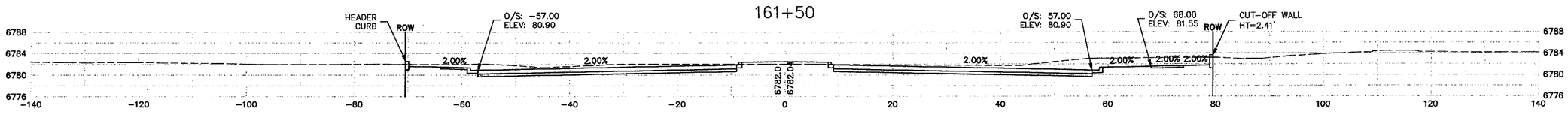

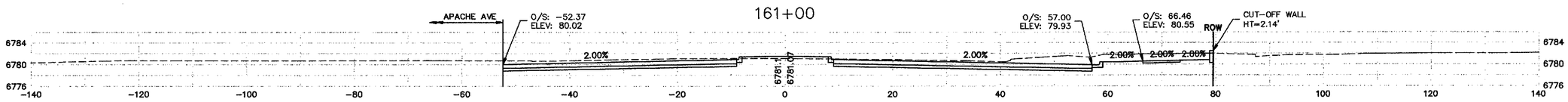

GENERAL NOTES

1. ROADWAY CROSS SECTIONS ARE FOR INFORMATIONAL PURPOSES ONLY.
2. SEE CERRILLOS ROADWAY TYPICAL SECTIONS, PLAN & PROFILES, AND CERRILLOS ROAD LAYOUT PLANS FOR ADDITIONAL INFORMATION.
3. SEE CERRILLOS ROAD LAYOUT PLANS FOR MEDIAN LAYOUT AND GRADING INFORMATION.
4. SEE CERRILLOS ROAD PHASE IIC FINAL RIGHT-OF-WAY MAPS (S100130) DATED APRIL 4, 2014 FOR ADDITIONAL RIGHT-OF-WAY AND TCP INFORMATION.
5. ADD 6700 TO TRUNCATED ELEVATIONS FOR ACTUAL ELEVATION.

NO.	DESCRIPTION	DATE	BY
3			
2			
1			

REVISIONS (OR CHANGE NOTICES)

SCALE
HORIZ. 1"=10'
VERT. 1"=10'

DESIGNED BY: PB	DRAWN BY: PB	CHECKED BY: JB
DATE: 08/07/15	DATE: 08/07/15	DATE: 08/07/15

CITY OF SANTA FE

CERRILLOS ROAD PHASE IIC
CAMINO CARLOS REY TO
LLANO STREET
SANTA FE COUNTY

CROSS SECTIONS
CERRILLOS ROAD

PARSONS BRINCKERHOFF

CITY OF SANTA FE	SHEET
NEW MEXICO PROJECT NO.	NO.
CN S100130	14-9

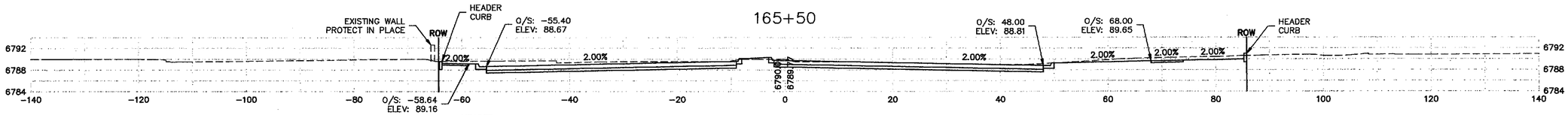

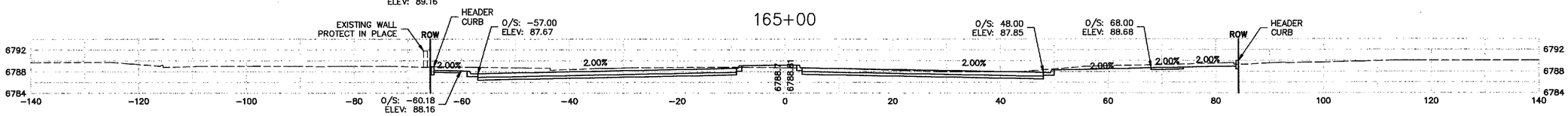

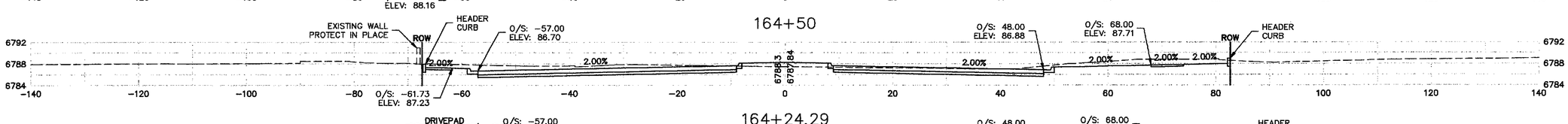

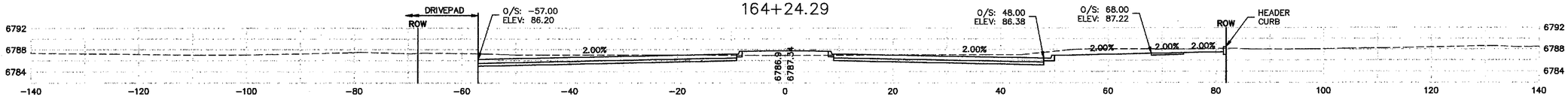

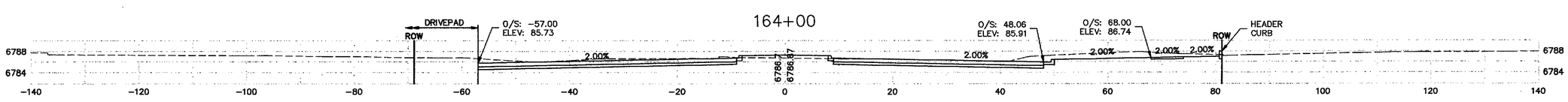

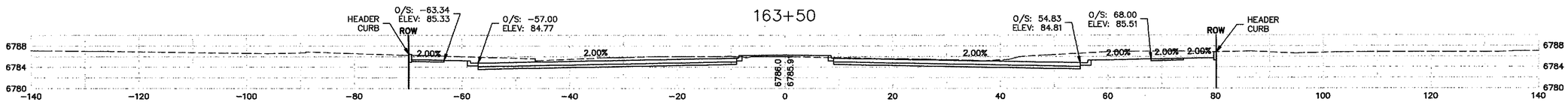

GENERAL NOTES

1. ROADWAY CROSS SECTIONS ARE FOR INFORMATIONAL PURPOSES ONLY.
2. SEE CERRILLOS ROADWAY TYPICAL SECTIONS, PLAN & PROFILES, AND CERRILLOS ROAD LAYOUT PLANS FOR ADDITIONAL INFORMATION.
3. SEE CERRILLOS ROAD LAYOUT PLANS FOR MEDIAN LAYOUT AND GRADING INFORMATION.
4. SEE CERRILLOS ROAD PHASE IIC FINAL RIGHT-OF-WAY MAPS (S100130) DATED APRIL 4, 2014 FOR ADDITIONAL RIGHT-OF-WAY AND TCP INFORMATION.
5. ADD 6700 TO TRUNCATED ELEVATIONS FOR ACTUAL ELEVATION.

NO.	DESCRIPTION	DATE	BY
3			
2			
1			

REVISIONS (OR CHANGE NOTICES)

SCALE
HORIZ. 1"=10'
VERT. 1"=10'

DESIGNED BY: PB	DRAWN BY: PB	CHECKED BY: JB
DATE: 08/07/15	DATE: 08/07/15	DATE: 08/07/15

CITY OF SANTA FE

CERRILLOS ROAD PHASE IIC
CAMINO CARLOS REY TO
LLANO STREET
SANTA FE COUNTY

CROSS SECTIONS
CERRILLOS ROAD

PARSONS BRINCKERHOFF

CITY OF SANTA FE	SHEET
NEW MEXICO PROJECT NO.	NO.
CN S100130	14–10

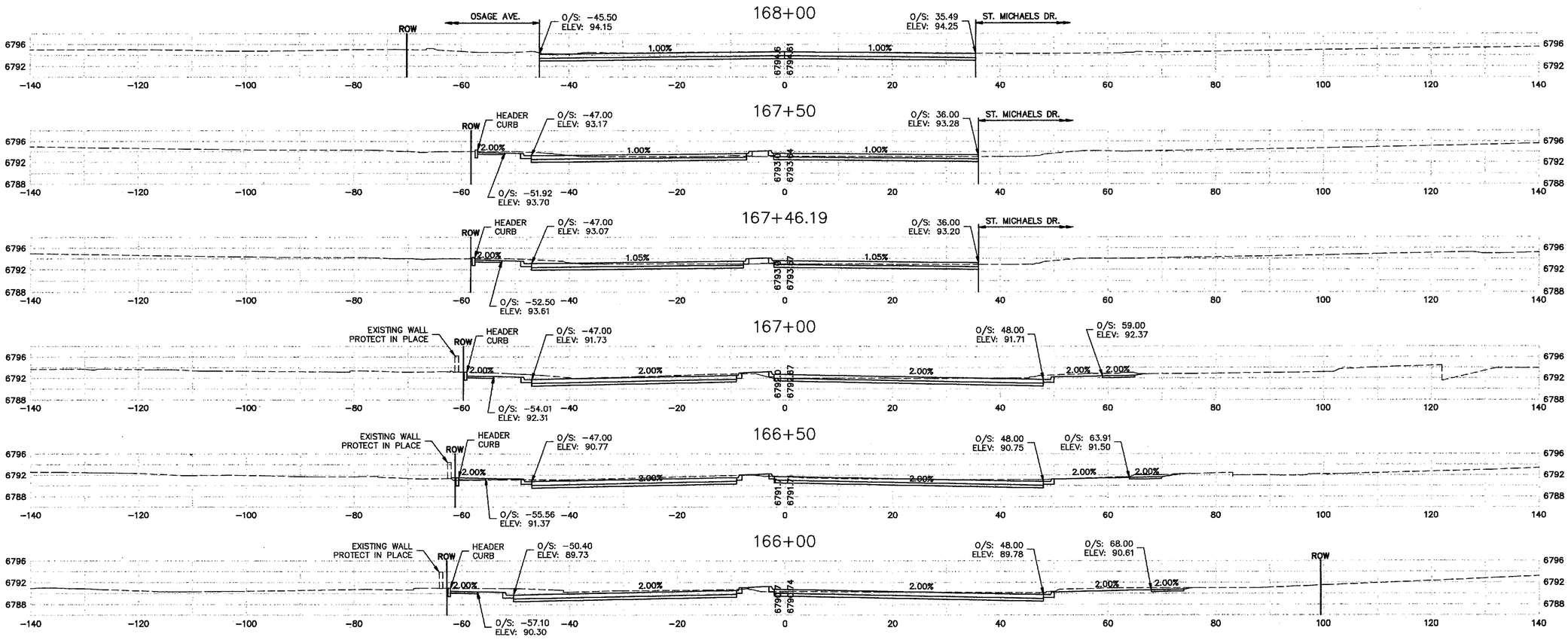

GENERAL NOTES

1. ROADWAY CROSS SECTIONS ARE FOR INFORMATIONAL PURPOSES ONLY.
2. SEE CERRILLOS ROADWAY TYPICAL SECTIONS, PLAN & PROFILES, AND CERRILLOS ROAD LAYOUT PLANS FOR ADDITIONAL INFORMATION.
3. SEE CERRILLOS ROAD LAYOUT PLANS FOR MEDIAN LAYOUT AND GRADING INFORMATION.
4. SEE CERRILLOS ROAD PHASE IIC FINAL RIGHT–OF–WAY MAPS (S100130) DATED APRIL 4, 2014 FOR ADDITIONAL RIGHT–OF–WAY AND TCP INFORMATION.
5. ADD 6700 TO TRUNCATED ELEVATIONS FOR ACTUAL ELEVATION.

NO.	DESCRIPTION	DATE	BY
3			
2			
1			

REVISIONS (OR CHANGE NOTICES)

CITY OF SANTA FE

CERRILLOS ROAD PHASE IIC
CAMINO CARLOS REY TO
LLANO STREET
SANTA FE COUNTY

CROSS SECTIONS
CERRILLOS ROAD

SCALE
HORIZ. 1"=10'
VERT. 1"=10'

DESIGNED BY: PB	DRAWN BY: PB	CHECKED BY: JB
DATE: 08/07/15	DATE: 08/07/15	DATE: 08/07/15

J:\33693 Cerrillos Ph IIC\04 Engineering-33693\Plans\14_Sheets\Cerrillos PhIIC_XSections.dwg Oct 07, 2015 – 7:56am Saved By: milernz

N.M. PROJECT NO. CN S100130 SHEET NO. 14–10

PARSONS BRINCKERHOFF

CITY OF SANTA FE	SHEET
NEW MEXICO PROJECT NO.	NO.
CN S100130	14–11

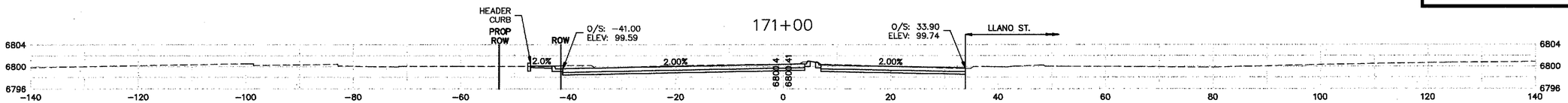

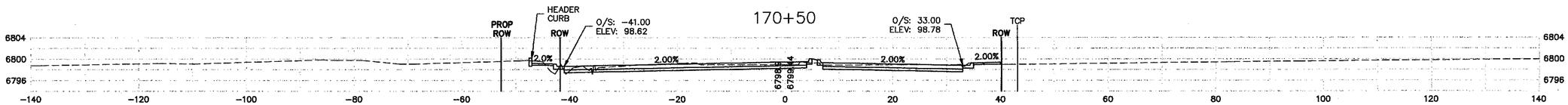

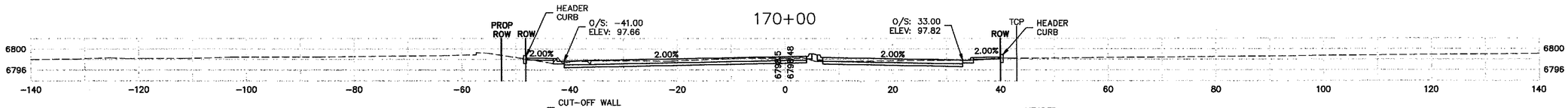

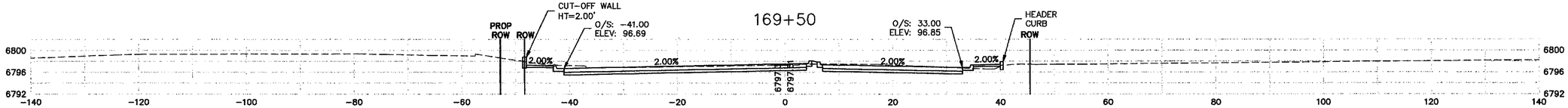

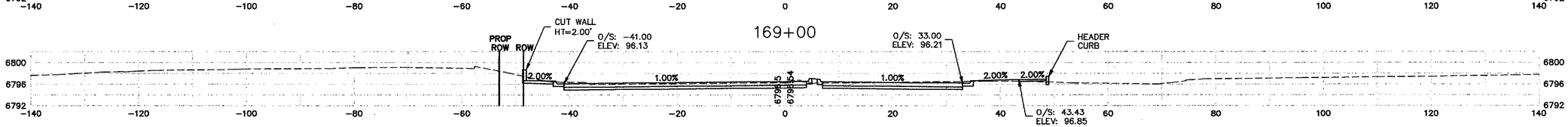

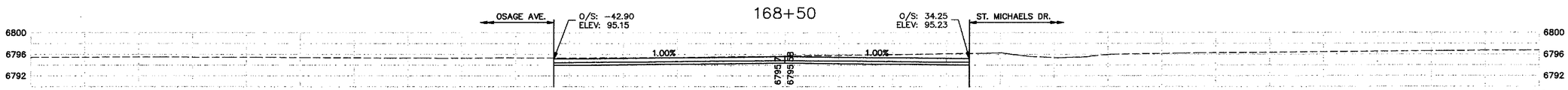

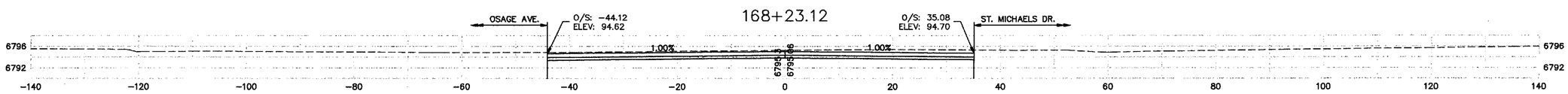

GENERAL NOTES

1. ROADWAY CROSS SECTIONS ARE FOR INFORMATIONAL PURPOSES ONLY.
2. SEE CERRILLOS ROADWAY TYPICAL SECTIONS, PLAN & PROFILES, AND CERRILLOS ROAD LAYOUT PLANS FOR ADDITIONAL INFORMATION.
3. SEE CERRILLOS ROAD LAYOUT PLANS FOR MEDIAN LAYOUT AND GRADING INFORMATION.
4. SEE CERRILLOS ROAD PHASE IIC FINAL RIGHT–OF–WAY MAPS (S100130) DATED APRIL 4, 2014 FOR ADDITIONAL RIGHT–OF–WAY AND TCP INFORMATION.
5. ADD 6700 TO TRUNCATED ELEVATIONS FOR ACTUAL ELEVATION.

NO.	DESCRIPTION	DATE	BY
3			
2			
1			

REVISIONS (OR CHANGE NOTICES)

SCALE
HORIZ. 1"=10'
VERT. 1"=10'

DESIGNED BY: PB	DRAWN BY: PB	CHECKED BY: JB
DATE: 08/07/15	DATE: 08/07/15	DATE: 08/07/15

CITY OF SANTA FE

CERRILLOS ROAD PHASE IIC
CAMINO CARLOS REY TO
LLANO STREET
SANTA FE COUNTY

CROSS SECTIONS
CERRILLOS ROAD

J:\33693 Cerrillos Ph IIC\04 Engineering–33693\Plans\14_Sheets\Cerrillos PhIIC_XSections.dwg Oct 07, 2015 – 7:50am Saved By: millernz

N.M. PROJECT NO. CN S100130 SHEET NO. 14–11