CITY OF SANTA FE

"REQUEST FOR BIDS"

CIP #507N – GENOVEVA CHAVEZ COMMUNITY CENTER (GCCC)
NATATORIUM DEHUMIDIFICATION SYSTEM REMODELING

BID # '15/20/B

PROJECT MANUAL

<u>BIDS DUE:</u>

MARCH 24, 2015
2:00 P.M.
PURCHASING OFFICE
CITY OF SANTA FE
2651 SIRINGO ROAD – BUILDING "H"

INDEX TO BIDDING / CONTRACT DOCUMENTS

PRE-BID INFORMATION	**Division**	**00 0100**	**Page**	**4**
Debarred or Suspended Contractors		**00 0101**		**4**
ADVERTISEMENT FOR BIDS		**00 1100**		**5-6**
Advertisement		**00 1113**		**7**
Bid Schedule		**00 1114**		**8**
INSTRUCTIONS TO BIDDERS		**00 2100**		**9-18**
Definitions and Terms		**1.0**		
Examination of Bidding Documents and Site		**2.0**		
Bidding Documents		**3.0**		
Bidding Procedures		**4.0**		
Consideration of Bids		**5.0**		
Post Bid Information		**6.0**		
Minimum Wage Rates		**7.0**		
Other Instructions to Bidders		**8.0**		
New Mexico Labor and Industrial Division of the Labor Department Contractor and Subcontractor Registration		**9.0**		
PROCUREMENT SCOPE		**00 2400**		**19**
Scope of Bids		**00 2413**		**19-20**
INFORMATION AVAILABLE TO BIDDERS		**00 3000**		**20**
Existing Conditions		**00 3100**		**20**
Record Existing Facility Plans		**00 3101**		**20**
BID FORMS		**00 4100**		**21**
Bid Form - Stipulated Sum		**00 4113**		**21-26**
SUPPLEMENT TO BID FORMS		**00 4300-4500**		**27**
Bid Security Form		**00 4313**		**27**
Agent's Affidavit		**00 4517**		**28**
Subcontractor Listing		**00 4518**		**29**
Non-Collusion Affidavit of Prime Bidder		**00 4519**		**30**
Certificate of Non-Segregated Facilities		**00 4533**		**31**
Instructions relating to Local Preference Certification Form		**00 4534**		**32**
Local Preference Certification Form		**00 4534.1**		**33**
Resident Veterans Preference		**00 4535**		**34**
Statement of Intent to Pay Prevailing Wages		**00 4545**		**35**
Certification of Bidder Regarding Equal Employment Opportunity		**00 4546**		**36**
AGREEMENT FORMS		**00 5200**		**37**
Agreement (AIA A101)		**00 5213**		**37**
AIA General Conditions (AIA A201)		**00 5214**		**37**
BONDS, CERTIFICATES, AND NOTICES		**00 6100-6200**		**38**
BID BOND (Insert AIA Document A310 with bid)		**00 6101**		**38**
Performance Bond		**00 6113.13**		**38**
Labor and Material Payment Bond		**00 6113.16**		**38**
Certificate of Liability Insurance		**00 6216**		**38**
Workers' Compensation Insurance		**00 6217**		**38**
Notice to Proceed (Sample)		**00 6218**		**39**
GENERAL CONDITIONS OF THE CONTRACT		**00 7200**		**40**

General Conditions	**00 7213**	**40-60**
SUPPLEMENTARY CONDITIONS	**00 7300**	**61**
City of Santa Fe Requirements	**00 7301**	**61-64**
Minimum Wage Rates & City Living Wage	**00 7343**	**65**
SPECIFICATIONS (See Index at front of Specifications.)	**DIVISIONS 01-26**	

PRE-BID INFORMATION
(00 0100)

(00 0101) DEBARRED OR SUSPENDED CONTRACTORS

A business (contractor, subcontractor, or supplier) that has either been debarred or suspended pursuant to the requirements of City Purchasing Manual or Section 13-1-177 through 13-1-180, and 13-4-17 NMSA 1978 as amended or City Purchasing provisions, shall not be permitted to do business with the City and shall not be considered for award of Contract during the period for which it is debarred or suspended.

(00 1100) ADVERTISEMENT FOR BIDS

CITY OF SANTA FE
CAPITAL IMPROVEMENTS PROGRAM

ADVERTISEMENT FOR BIDS

SEALED BIDS FOR:	CIP PROJECT #507N – GENOVEVA CHAVEZ COMMUNITY CENTER (GCCC) NATATORIUM DEHUMIDIFICATION SYSTEM REMODELING '15/20/B
PRE-BID CONFERENCE:	Tuesday March 10, 2015 2:00 PM CoSF Facilities Division Office 2651 Siringo Road Building E Santa Fe, New Mexico 87505
TO BE OPENED AT:	Purchasing Office 2651 Siringo Road Building H Santa Fe, New Mexico 87505 (505) 955-5711
TIME:	2:00 P.M. Local Prevailing Time
DATE:	Tuesday, March 24, 2015
ADDRESSED TO:	City Purchasing Officer City of Santa Fe 2651 Siringo Road Building H Santa Fe, New Mexico 87505

Bids will be received until the above time, then opened publicly at the Purchasing Director's office or other designated place, and read aloud. BIDS RECEIVED AFTER THE ABOVE TIME WILL BE RETURNED UNOPENED.
Bidding Documents will post on the City of Santa Fe web site www.santafenm.gov and also may be obtained from Jason M. Kluck, Facilities Development Division 2651 Siringo Road, Building "E", Santa Fe NM 87505 Phone number 505-955-5937. A deposit is not required.

BIDDING DOCUMENTS MAY BE REVIEWED AND/OR OBTAINED AT THE FOLLOWING LOCATIONS:

- City of Santa Fe web site www.santafenm.gov
- City of Santa Fe Facilities Development Division, Siringo Administrative Complex, 2651 Siringo Road, Building "E", Santa Fe NM 87505, attention Jason M. Kluck (505)955-5937. A deposit is not required.
- Builders News: (505)884-1752, 3435 Princeton NE, Albuquerque, NM 87107, www.buildersplanroom.com
- Construction Reporter: (505)243-9793, 1609 2nd St. NW, Albuquerque, NM 87102, www.constructionreporter.com
- Dodge Reports: www.construction.com
- CMD (formerly Reed Construction Data): www.cmdgroup.com

Bids for the project will be presented in the form of a base bid plus alternates if any. Award will be made to the bidder providing the lowest total base bid. Bidder shall Bid all items listed in the Scope of Work. Bidder shall include in the signed documents

their license and MM-98 classification. Pursuant to NMAC 14.6.6, a validly licensed person may bid and contract as the prime contractor of a project only if the major portion of the work, based on dollar amount, is authorized by the classification of the prime contractor's license. Any work outside the scope of the prime contractor's license classification(s) must be subcontracted. This provision is subject to the exception set forth in Subsection A of 14.6.6.9 NMAC. Contract award will be made to the responsible Bidder submitting the low Base Bid. However the Owner may award the contract to the responsible Bidder submitting the low combined Bid (Base Bid plus Additive Alternate and applicable Gross Receipts Taxes), within the amount of funds available, if applicable.

Bid security, made payable to the City of Santa Fe, the "Owner" in the amount of 5% of the proposal sum shall be submitted with the Bid. Bid security shall be in the form of a Bid Bond issued by Surety licensed to conduct business in the State of New Mexico, or by certified check. The Bidders security shall be retained by the Owner until the Contract is signed; the other Bidder's security shall be returned as soon as practicable. Failure or refusal by the successful Bidder to enter into Contract with the Owner will constitute Liquidated Damages in favor of the Owner. The bid shall also include a signed "Non-Collusion Affidavit of Prime Bidders", signed "Certificate of Non-Segregated Facilities", a signed "Certificate of Bidder Regarding Equal Employment Opportunity", a Subcontractor's Listing and; if applicable, a Local Preference Application. The project is subject to the New Mexico Office of Labor Commission, Minimum Wage Rates for the State of New Mexico. Such wage rates are bound into the Contract Documents. The successful Bidder shall, upon notice of award of contract, secure from each of his Subcontractors a signed "Non-Collusion Affidavit of Subcontractors".
The Bidding Documents contain a time for completion of the work by the successful Bidder, and further imposes liquidated damages for failure to comply with that time.

The Owner reserves the right to reject any and all Bids, to waive technicalities, and to accept the Bid it deems to be in the best interest of the City of Santa Fe.

The contractor shall be required comply with 2009 NEW MEXICO COMMERCIAL BUILDING CODE, NMAC, the 2009 INTERNATIONAL BUILDING CODE (IBC) and any other governing regulations and standards. The contractor shall be responsible for required submittals with the State CID office. For reference please see: www.rld.state.nm.us/construction General Building - Forms & Applications.

The work designated as **CIP #507N – GCCC NATATORIUM DEHUMIDIFICATION SYSTEM REMODELING** includes the following scope of work:

> **Complete removal and replacement of two existing dehumidification and climate control units, duct work improvements, exhaust fan additions, small split system office AC addition and other associated work**

Contractor shall be responsible for adherence to the Contract Documents, Construction Documents, Specifications and approved directives.
Contractor shall be responsible for State CID requirements and permit.
Contractor shall be responsible for verifications of all existing conditions, measurements and dimensions for bidding.
Contractor shall be responsible for all permits, fees, and State and/or City inspections associated with the construction.
Contractor shall be responsible for removal and securing of any interior or roof top equipment, vents, piping, ducting, conduit and cable necessary to provide for the new work in accordance with the contract documents and to re-install these items in good work condition.

The City of Santa Fe is an Equal Opportunity Employer and all qualified applicants will receive consideration for employment without regard to race, color, religion, sex, sexual orientation or national origin. The successful Bidder will be required to conform to the Equal Opportunity Employment Regulations.

ADVERTISEMENT (00 1113)

CIP #507N – GENOVEVA CHAVEZ COMMUNITY CENTER NATATORIUM DEHUMIDIFICATION SYSTEM REMODELING

BID NO. '15/20/B

Bids will be received by the City of Santa Fe and will be delivered to City of Santa Fe, Purchasing Office, 2651 Siringo Road, Bldg. H Santa Fe, New Mexico 87505 **until 2:00 P.M. local prevailing time March 24, 2015. Any bid received after this deadline will not be considered.** This bid is for the purpose of procuring:

GENOVEVA CHAVEZ COMMUNITY CENTER NATATORIUM DEHUMIDIFIICATION SYSTEM REMODELING

ATTEST:

Robert Rodarte, Purchasing Director
City of Santa Fe, New Mexico

Received by the Santa Fe New Mexican on: 02/19/15
To be published on: 2/24/15

Received by the Albuquerque Journal on: 02/19/15
To be published on: 2/24/15

(00 1114) BID SCHEDULE

1)	ADVERTISEMENT:	February 24, 2015
2)	ISSUANCE OF BID PACKET:	February 24, 2015
3)	PRE-BID CONFERENCE:	March 10, 2015 2:00 PM CoSF Facilities Division Office 2651 Siringo Road Building E Santa Fe, New Mexico 87505
4)	BID SUBMITTAL DEADLINE:	March 24, 2015
5)	OPENING OF BIDS RECEIVED:	March 24, 2015
6)	RECOMMENDATION OF AWARD:	
	PUBLIC WORKS/CIP AND LAND USE COMMITTEE:	April 6, 2015
	FINANCE COMMITTEE:	April 13, 2015
	CITY COUNCIL:	April 29, 2015

DATES OF CONSIDERATION BY COMMITTEES AND CITY COUNCIL ARE TENTATIVE AND SUBJECT TO CHANGE WITHOUT NOTICE. PLEASE NOTE THAT THE CONTRACTOR BEING RECOMMENDED FOR SELECTION WILL NOT BE REQUIRED TO ATTEND COMMITTEE OR CITY COUNCIL MEETINGS.

INSTRUCTIONS TO BIDDERS
(00 2100)

1.0 DEFINITIONS AND TERMS

1.1 Terms used in these Bidding Documents which are defined in the Conditions of the Contract for Construction (General, Supplementary, and other conditions) have the meanings assigned to them in those Conditions.

2.0 EXAMINATION OF BIDDING DOCUMENTS AND SITE

2.1 Before submitting a Bid, each Bidder must (a) examine the Bidding Documents thoroughly, (b) visit the site to familiarize himself with local conditions that may in any manner affect cost, progress, or performance of the work, (c) familiarize himself with Federal, State, and local laws, ordinances, rules, and regulations that may in any manner effect cost, progress, or performance of the work, and (d) study and carefully correlate the Bidder's observations with the Bidding Documents.

2.2 On request, the Owner will provide each Bidder access to the site to conduct such investigations and tests as each Bidder deems necessary for submission of his Bid.

2.3 The lands upon which the work is to be performed rights-of-way for access thereto, and other lands designated for use by the Contractor in performing the work are identified in the Bidding Documents.

2.4 The submission of a Bid will constitute an incontrovertible representation by the Bidder that has complied with every requirement of this Section and that the Bidding Documents are sufficient in scope and detail to indicate and convey understanding of all terms and conditions for performance of the work.

3.0 BIDDING DOCUMENTS
3.1 COPIES OF BIDDING DOCUMENTS

3.1.1 Complete sets of the Bidding Documents in the number and for the deposit sum, if any, stated in the Advertisement may be obtained as indicated therein. The deposit will be refunded to Bidders who submit a bona fide Bid and return the Bidding Documents in good and complete condition within fifteen (15) calendar days after opening of Bids.

3.1.2 Complete sets of Bidding Documents shall be used in preparing Bids; the Owner does not assume responsibility for errors or misinterpretations resulting from the use of incomplete sets of Bidding Documents.

3.1.3 The Owner, in providing for copies of Bidding Documents available on the above terms, does so only for the purpose of obtaining Bids on the work and does not confer a license or grant for any other use.

3.2 INTERPRETATIONS

3.2.1 All questions about the meaning or intent of the Bidding Documents shall be submitted to the Purchasing Officer in writing. Replies will be issued by Addenda mailed or delivered to all parties recorded by the Owner as having received the Bidding Documents. Questions received less than ten (10) days prior to the date for opening of Bids will not be answered. Only questions answered by formal written Addenda will be binding. Oral and other interpretations or clarifications will be without legal effect.

3.2.2 Bidders and Subcontractors shall promptly notify the Owner in writing. Addenda will be mailed or delivered to all parties who have received Bid packages. Request/Questions received less than ten (10) days prior to the date for opening of Bids will not be answered. Only questions answered by formal written Addenda will be binding. Oral and other interpretation or clarifications will be without legal effect.

3.3 SUBSTITUTE MATERIAL AND EQUIPMENT

The Contract, if awarded, will be on the basis of material and equipment described in the Drawings or specified in the Specifications without consideration of possible substitute or "of-equal" items. Whenever it is indicated in the Drawings or specified in the Specifications that substitute "of-equal" item of material or equipment may be furnished or used by the Contractor if acceptable to the Owner, application of such acceptance will not be considered by the Owner until after the "effective date of the Contract." The

procedure for submittal of any such application by the Contractor and consideration by the Owner is set forth in the Contract Documents.

3.4 ADDENDA

3.4.1 No oral interpretations of the meaning of the specifications or other pre-bid documents will be binding. Oral communications are permitted in order to make assessment for an addendum. **ANY QUESTIONS CONCERNING THE BID SHOULD BE ADDRESSED PRIOR TO BID OEPNING DATE**.

Every request for such interpretations should be in writing addressed to Robert Rodarte, Purchasing Officer, 2651 Siringo Road, Bldg H, Santa Fe, New Mexico 87505 and to be given consideration must be received at least ten (10) days prior to the date fixed for the opening of the bids.

3.4.2 Any and all such interpretations and any supplemental instructions will be in the form of written addenda to the specifications which, if issued, will be delivered to all prospective bidders not later that three (3) days prior to the date fixed for the opening of the bids. Failure of any bidder to receive any such addendum or interpretations shall not relieve such bidder from any obligation under his bid as submitted. All addenda so issued shall become part of the contract documents.

3.4.3 The City reserves the right to not comply with these time frames if a critical addendum is required or if the proposal deadline needs to be extended due to a critical reason in the best interest of the City of Santa Fe.

4.0 BIDDING PROCEDURES

4.01 The person or persons opening the bids will adhere to the following procedure:

4.02 Bid – Name the Bidder and the Number of Bidder's New Mexico Contractor's License with a check for proper signatures.

4.03 Bid Bond only for the highest option bid.

4.04 Non-Collusion Affidavit of Prime Bidder.

4.05 Submittal, acknowledgement of Addenda, if any.

4.06 Properly executed Bid Form.

4.07 Equal Employment Opportunity

4.08 Certification of Non-segregated Facilities.

4.09 The state or any political subdivision of the state shall not accept a bid on a public works project subject to the Public Works Minimum Wage Act from a prime contractor that does not provide proof of required registration for itself.

If any of the other requirements have not been met, the bid shall be disqualified and considered a non-responsive bid. Any disqualified bids will not be read.

4.1 FORM AND STYLE OF BIDS

4.1.1 Bids shall be submitted on forms identical to the form included with the Bidding Documents.

4.1.2 All blanks on the Bid Form shall be filled in by typewriter or manually in ink.

4.1.3 Where so indicated by the makeup of the Bid Form, sums shall be expressed in both words and figures, and, in case of discrepancy between the two, the amount written in words shall govern.

4.1.4 Any interlineation, alteration, or erasure must be initialed by the signer of the Bid.

4.1.5 All requested Additive or Deductive Alternate Bids shall be Bid. If no change in the Base Bid is required, enter "No Change."

4.1.6 Where there are two or more major items of work (identified as "Bid Lots") for which separate quotations are requested, the Bidder may, at his discretion, submit quotations for any or all items, unless otherwise specified. Additionally, the Bidder may submit a lump sum price for all lots for which the Bidder has submitted separate quotations.

4.1.7 Each copy of the Bid shall include the complete name of the Bidder and a statement that the Bidder is a sole proprietor, a partnership, by the person or persons legally authorized to bind the Bidder to a contract. A Bid by a corporation shall bind the Bidder to a contract. A Bid by a corporation shall further give the state of incorporation and have the applicable New Mexico Certificate of Incorporation number or Certificate of Authority number. The Bid shall include the current Contractor's license number and type, and the current Contractor's preference number. A Bid submitted by an agent shall have a current Power of Attorney attached certifying the agent's authority to bind the Bidder.

4.1.8 The Bid shall contain an acknowledgment of receipt of all Addenda (the numbers of which shall be filled in on the Bid Form).

4.1.9 The address, to which communications regarding the Bid are to be directed, must be shown.

4.2 BID SECURITY

4.2.1 Bid security only for the highest option bid in an amount equal to at least 5% of the amount of the Bid shall be a bond provided by a Surety company authorized to do business in this State, or the equivalent in cash, or otherwise supplied in a form satisfactory to the Owner. All Bonds shall be executed by such sureties as are named in the current list of Companies Holding Certificates of Authority as Acceptable Sureties on Federal Bonds and as Acceptable Reinsuring Companies.

4.2.2 The Bid security shall be in the amount of five percent (5%) of the highest Bid amount submitted, unless otherwise stipulated, pledging that the Bidder will enter into a Contract with the Owner in the terms stated herein and will furnish bonds covering the faithful performance of the Contract and payment of all obligations arising there under. Should the Bidder refuse to enter into such Contract or fail to furnish such bonds, the amount of the Bid security shall be forfeited to the Owner as liquidated damages, not as a penalty.

4.2.3 The Owner will have the right to retain the Bid security of Bidders to whom an award is being considered until either (a) the Contract has been executed and bonds have been furnished, or (b) the specified time has elapsed so that Bids may be withdrawn, or (c) all Bids have been rejected.

4.2.4 When the Bidding Documents require Bid security, noncompliance by the Bidder requires that the Bid be rejected.

4.2.5 If a Bidder is permitted to withdraw his Bid before award, no action shall take place against the Bidder or the Bid Security.

4.3 PRE-BID CONFERENCE

4.3.1 The Owner of Record shall conduct a Pre-Bid Conference approximately ten (10) calendar days prior to the Bid opening date stated in the Invitation for Bid.

4.3.2 The Owner of Record and his consultants, as applicable, shall be represented. Prospective Bidders and Prospective Subcontractors should ask questions regarding substitutions and/or request clarification of the Bidding Documents. The failure of a Bidder, Subcontractor, or Vendor to attend shall be interpreted to mean that the Bid Documents are clear and acceptable to all non participants at the Pre-Bid Conference. Such clarity and acceptability shall be presumed with respect to all Bidders.

4.3.3 Questions and requests for clarification are to be presented in written form. Responses will be written and issued as Addenda. No verbal response shall be binding.

4.4 RESIDENT PREFERENCE & LOCAL PREFERENCE

INTENT AND POLICY

The city recognizes that the intent of the state resident preference statute is to give New Mexico businesses and contractors an advantage over those businesses, manufacturers and contractors from outside the State of New Mexico. The underlying

policy is to give a preference to those persons and companies who contribute to the economy of the State of New Mexico by maintaining businesses and other facilities within the state and giving employment to residents of the state (1969 OP. Att'y Gen. No. 69-42). The city also has adopted a policy to include a local preference to those persons and companies who contribute to the economy of the County of Santa Fe by maintaining businesses and other facilities within the county and giving employment to residents of the county.

APPLICATION-IN-STATE AND OUT OF STATE BIDDERS

With acknowledgment of this intent and policy, the preference will only be applied when bids are received from in-state and county businesses, manufacturers and contractors that are within 5% of low bids received from out-of-state businesses, manufacturers and contractors (13-1-21 (A) -1-21 (F) and 13-4-2 (C) NMSA 1978).

To be considered a resident for application of the preference, the in-state bidder must have included a valid state purchasing certification number with the submitted bid.

Thus it is recommended that in-state bidders obtain a state purchasing certification number and use it on all bids, in order to have the preference applied to their advantage, in the event an out-of-state bid is submitted. In submitting a bid, it should never be assumed that an out-of-state bid will not be submitted.

For information on obtaining a state purchasing certification number, the potential bidder should contact the State of New Mexico Taxation and Revenue Department.

All resident preferences shall be verified through the State Purchasing Office. Applications for resident preference not confirmed by the state Purchasing Office will be rejected. The certification must be under the bidder's business name submitting the bid.

NON-APPLICATION-COMPETING IN-STATE BIDDERS

If the lowest responsive bid and the next responsive bids within 5% of the lowest bid are all from the state of New Mexico, then the resident preference will not be applied and the state purchasing certification number will not be considered. To be considered an in-state bidder in this situation, the bidders must meet the definition criteria of Chapter 13-1-21 (A) (1) and Chapter 13-4-2 (A) NMSA 1978. After examining the information included in the bid submitted, the city Purchasing Director may seek additional information of proof to verify that the business is a valid New Mexico business. If it is determined by the city Purchasing Director that the information is not factual and the low responsive bid is actually an out-of-state bidder and not a New Mexico business, then the procedures in the previous section may be applied.

If the bidder has met the above criteria, the low responsive "resident" bid shall be multiplied by .95. If that amount is then lower than the low responsive bid of a "non-resident" bidder, the award will be based taking into consideration the resident preference of 5%.

APPLICATION FOR LOCAL PREFERENCE

For the purposes of this section, the terms resident business and resident manufacturer shall be defined as set out in Section 13-1-21 NMSA 1978; the term local as applied to a business or manufacturer shall mean:

Principal Office and location must be stated: To qualify for the local preference, the principal place of business of the enterprise must be physically located within the Santa Fe County Geographic Boundaries. The business location inserted on the Form must be a physical location, street address or such. DO NOT use a post office box or other postal address. Principal place of business must have been established no less than six months preceding application for certification.

The PREFERENCE FACTOR for resident and local preferences applied to bids shall be .95 for residents and .90 for local. The local preference for proposals shall be 1.10.

The PREFERENCE FACTOR for resident and local preferences applied to bids shall be .95 for residents and .90 for local. The local preference for proposals shall be 1.10.

New Mexico Resident Veteran Business Preference: New Mexico law, Section 13-1-22 NMSA 1978, provides a preference in the award of a public works contract for a “resident veteran business”. Certification by the NM Department of Taxation and Revenue for the resident veteran business requires the Offeror to provide evidence of annual revenue and other evidence of veteran status.

An Offeror who wants the veteran business preference to be applied to its proposal is required to submit with its proposal the certification from the NM Department of Taxation and Revenue and the sworn affidavit attached hereto as Appendix E.

If an Offeror submits with its proposal a copy of a valid and current veteran resident business certificate, 7%, 8%, or 10% of the total weight of all the evaluation factors used in the evaluation of proposal may be awarded.

The local preference or resident business preference is not cumulative with the resident veteran business preference.

Bids for Goods and Services. When bids for the purchase of goods or services pursuant to Section 22 are received, the lowest responsive bid received from those bidders in the first category listed below shall be multiplied by the Preference Factor. If the resulting price of that bid receiving the preference is lower than or equal to the lowest bid of all bids received, the contract shall be awarded to that bidder receiving the preference. If no bids are received from bidders in the first category, or if the bid receiving the preference does not qualify for an award after multiplication by the Preference Factor, the same procedure shall be followed with respect to the next category of bidders listed to determine if the bid qualifies for award. The priority of categories of bidders is:

(1) Local business
(2) Resident business

Proposals for Goods and Services. When proposals for the purchase of goods or services pursuant to Section 23 are received, the evaluation score of the proposal receiving the highest score of all proposals from those proponents in the first category listed above shall be multiplied by the Preference Factor. If the resulting score of that proposal receiving the preference is higher than or equal to the highest score of all proposals received, the contract shall be recommended to that proponent receiving the preference. If no proposals are received from proponents in the first category, or if the proposal receiving the preference does not qualify for an award after multiplication by the Preference Factor, the same procedure shall be followed with respect to the next category of proposals listed to determine if a proponent qualifies for award.

Qualifications for Resident Preference. No resident business or manufacturer, as defined, shall be given any preference in the awarding of contracts for furnishing goods or services to the city, unless it shall have qualified with the State Purchasing Agent as a resident business or manufacturer and obtained a certification number as provided in Section 13-1-22 NMSA 1978. The certification number must be submitted with its bid for an offeror to qualify for this preference. The Central Purchasing Office shall determine if a resident preference is applicable to a particular offer on a case by case basis.

Qualifications for Local Preference. The Central Purchasing Office shall have available a form to be completed by all bidders/proponents who desire to apply for the local preference as a local business. The completed form with the information certified by the offeror must be submitted by the bidders/proponents with their bid or proposal to qualify for this preference.

Limitation. No offeror shall receive more than a 10% preference pursuant to this section on any one offer submitted. A bidder may not claim cumulative preferences.

Application. This section shall not apply to any purchase of goods or services when the expenditure of federal and/or state funds designated for a specific purchase is involved and the award requirements of the funding prohibit resident and/or local preference(s). This shall be determined in writing by the department with the grant requirements attached to the Purchasing Office before the bid or request for proposals is issued.

Exception. The City Council at their discretion can approve waiving the Local Preference requirements for specific projects or on a case by case basis if it is the City's best interest to do so.

New Mexico Resident Preference Number (if applicable)_____

4.5 SUBCONTRACTORS

4.5.1 The threshold amount for this project is $5,000.00. The General Contractor must list all Subcontractors who will perform work in excess of this threshold. Only one Subcontractor may be listed for each category as defined on by the Contractor. The Subcontractor Fair Practice Act (13-4-31 through 13-4-43 NMSA 1978) shall apply.

The Bidder shall list the Subcontractors or material suppliers he proposes to use for all trades or items on the Subcontractor Listing Form attached to the Bidding Document. If awarded the contract, the Bidder shall use the firm listed, or himself if "General Contractor has been listed, unless a request for a change or

substitution is approved by the Owner of any reason as outlined herein.

4.5.2 The Owner shall consider any request for a change in the listed forms if the Bidder can furnish evidence of being able to perform the work in a manner more satisfactory and beneficial to both the Owner and the Bidder by not using the listed form. Satisfactory reasons for a substitution may include the inability to bond or lack of evidence of being able to furnish acceptable materials on schedule. Also, if the Bidder has made a legitimate error in listing a low Subcontractor, a request for substitution, made after the Bid Opening with the Owner's approval, will be considered. The proof of error must be conclusive, based upon the approval of said evidence by the listed Subcontractor or material suppler and/or any other confirmation satisfactory to the Owner.

4.5.3 The Bidder shall not list himself as the supplier or as the Subcontractor for any trade unless he has previously performed work of this type or can prove to the Owner's satisfaction that he actually has or will obtain, fully adequate facilities and plans to perform the work with his own forces.

4.5.4 Omission or non-compliance with the intent of the Subcontractor Listing will be grounds for considering a Bid as non-responsive.

4.5.5 Prior to the award of the Contract, the Owner will notify the Bidder in writing if, after due investigation and written findings of fact, has reasonable and substantial objection to any person or organization on such list and refuses in writing to accept such person or organization, the Bidder may, at his option, (1) withdraw his Bid, or (2) submit an acceptable substitute Subcontractor with no increase in his Bid Price. In the event of withdrawal under this paragraph, Bid security will not be forfeited.

4.5.6 The successful Bidder shall, within seven (7) calendar days of notification of selection for the award of Contract for the work, submit the following information to the Owner:

(A) A signed list of the proprietary names and the suppliers of principal items or systems of materials and equipment proposed for the work; and

(B) A list signed by all Subcontractors proposed for the principal portions of the work in accordance with the Subcontractors Listing Form submitted with the Bid.

4.5.7 The successful Bidder will be required to establish to the satisfaction of the Owner the reliability and responsibility of the persons or entities proposed to furnish and perform the work described in the Bidding Documents.

4.5.8 Persons and organizations proposed by the Bidder and to whom the Owner has made no reasonable objection under the provisions of Paragraph 4.5.7 must be used on the work for which they were proposed and shall not be changed except with the written consent of the Owner.

4.5.9 No successful Bidder shall be required to employ any Subcontractor, other person, or organization against whom he has reasonable objection.

4.6 SUBMISSION OF BIDS

4.6.1 Bids shall be submitted at the time and place indicated in the Invitation for Bid and shall be submitted in a sealed envelope marked with the Project title and name and address of the Bidder, New Mexico License # _____, and accompanied by the Bid Security, Subcontractors Listing, and other required documents listed in the Bid Documents.

4.6.2 The envelope shall be addressed to:

Purchasing Agent/City of Santa Fe
2651 Siringo Road, Building 'H'
Santa Fe, NM 87505

The following information shall be provided on the front of the Bid envelope: Invitation for Bid number, date of opening, time of opening, and New Mexico License Number. If the Bid is sent by mail, the sealed envelope shall be enclosed in a separate mailing envelope with the notation "SEALED BIDS ENCLOSED" on the face thereof.

4.6.3 Bids received after the date and time for receipt of Bids will be returned unopened.

4.6.4 The Bidder shall assume full responsibility for timely delivery of Bids at the office of the City's Purchasing Division, including those Bids submitted by mail. Hand-delivered Bids shall be submitted at the front desk of the City Purchasing Division and will be clocked in at the time received, which must be prior to the time specified. Bids will then be held for public opening.

4.6.5 Oral telephonic, e-mailed or telegraphic Bids are invalid and will not receive consideration.

4.7 CORRECTION OR WITHDRAWAL OF BIDS

4.7.1 A Bid containing a mistake discovered before Bid Opening may be modified or withdrawn by a Bidder prior to the time set for Bid Opening by delivering written or telegraphic notice to the location designated in the Invitation for Bid as the place where Bids are to be received.

4.7.2 Bid security, if required, shall be in an amount sufficient for the Bid as modified or resubmitted in conformance with Section 4.2.

4.7.3 Withdrawn Bids may be resubmitted up to the time and date designated for the receipt of Bids, provided they are then fully in conformance with the Bid Documents.

4.7.4 After Bid Opening, no modifications in Bid Prices or other provisions of Bids shall be permitted. A low Bidder alleging a material mistake of fact which makes his Bid non-responsive may be permitted to withdraw his Bid if:

(A) The mistake is clearly evident on the face of the Bid document; or

(B) The Bidder submits evidence which clearly and convincingly demonstrates that a mistake was made.

Any decision by the Owner to permit or deny the withdrawal of a Bid on the basis of a mistake contained therein shall be supported by a determination setting forth the grounds for the decision. If withdrawal is permitted, Bid security will not be forfeited.

4.8 NOTICE OF CONTRACT REQUIREMENTS BINDING ON BIDDER

4.8.1 In submitting this Bid, the Bidder represents that he has familiarized himself with the nature and extent of the following requirements of the Conditions of the Construction Contract (General, Supplementary, and Other Conditions).

(A) Definitions - Sections 1.0 to 1.17;
(B) Bribes, Gratuities, and Kickbacks - Section 4.0;
(C) Contract Bond Requirements - Section 4.2;
(D) Equal Employment Opportunity - Labor Standards Provisions and other listed within the Contract Documents.

4.9 REJECTION OR CANCELLATION OF BIDS

4.9.1 An Invitation for Bid may be canceled, or any or all Bids may be rejected in whole or in part, when it is in the best interest of the Owner. A determination containing the reasons shall be made part of the Project file. Bid security for rejected Bids shall be returned to the Bidder.

4.10 PROTESTS

4.10.1 Any Bidder, Offeror, or Contractor who is aggrieved in connection with this procurement (Bid) may protest to the City Purchasing Agent and the Owner in accordance with the requirements. The protest should be made in writing within twenty-four (24) hours after the facts or occurrences giving rise thereto, but in no case more than within fifteen (15) calendar days after the facts or occurrences giving rise thereto.

4.10.2 The complete procedures and requirements regarding protest are available from the Purchasing Office upon request.

4.11 COMPETITIVE SEALED BIDS

4.11.1 Contracts solicited by competitive sealed Bids shall require that the base Bid amount exclude the applicable state gross receipts taxes or applicable local option taxes, but that the contracting agency shall be required to pay the applicable taxes including any increase in the applicable tax which becomes effective after the date the Contract is entered into. The applicable gross receipts taxes or local option taxes shall be shown as a separate amount on each billing or request for payment made under the contract.

5.0 CONSIDERATION OF BIDS

5.1 RECEIPT, OPENING, AND RECORDING

5.1.1 Bids received on time will be opened publicly and will be read aloud, and an abstract of the amounts of the Base Bids and Alternates or Bid items, if any, will be made available to the Bidders. Each Bid shall be open to public inspection. The Owner shall have the right to waive any informalities or irregularities in any Bid or Bids received and to accept the Bid or Bids which are in the Owner's best interest.

5.2 BID EVALUATION AND AWARD

5.2.1 It is the intent of the Owner to award a Contract to the responsible Bidder submitting the lowest option base bid provided the Bid has been submitted in accordance with the requirements of the Bidding Documents and does not exceed the funds available and is in the best interest of the City. The unreasonable failure of a Bidder to promptly supply information in connection with an inquiry with respect to responsibility is grounds for a determination that the Bidder is not a responsible Bidder.

5.2.2 Discrepancies in the Bid Form between words and figures will be resolved in favor of words. Discrepancies between the indicated sum of any column of figures and the correct sum thereof will be resolved in favor of the correct sum.

5.2.3 Acceptance of Alternates: Owner reserves the right to accept any alternate in any order.

5.3 NOTICE OF AWARD

A written Notice of Award shall be issued by the Owner after review and approval of the Bid and related documents by the Governing Authority, "as defined in the Supplementary Conditions", with reasonable promptness.

5.4 IDENTICAL BIDS

5.4.1 When two or more of the Bids submitted are identical in price and are the low Bid, the City Purchasing Agent or the Owner may:

(A) Award pursuant to the identical low bid provisions of the City Purchasing Manual;

(B) Award to a resident local business if the identical low Bids are submitted by a resident or local business and a non-resident business;

(C) Award to resident or local manufacturer if the identical low Bids are submitted by a resident or local manufacturer and a resident business;

(D) Award by lottery to one of the identical low Bidders; or

(E) Reject all Bids and re-solicit Bids or proposals for the required services, construction, or items of tangible personal property.

5.5 CANCELLATION OF AWARD

5.5.1 When in the best interest of the public, the Owner may cancel the award of any Contract at any time before the execution of said contracts by all parties without any liability against the Owner.

6.0 POST-BID INFORMATION

6.1 RETURN OF BID SECURITY

All Bid security in the form of checks, except those of the two lowest Bidders, will be returned immediately following the opening and checking of the Bids. The retained Bid security of the unsuccessful of the two lowest Bidders, if in the form of a check, will be returned within fifteen (15) days following the award of contract. The retained Bid security of the successful Bidder, if in the form of a check, will be returned after a satisfactory Contract bond has been furnished and the Contract has been executed. Bid securities in the form of Bid bonds will be returned only upon the request of the unsuccessful Bidder, but will be released by the City Purchasing Agent after the Notice of Award is sent by the Owner.

6.2 NOTICE TO PROCEED

The Owner will issue a written Notice to Proceed to the Contractor stipulating the date from which Contract Time will be charged and the date Contract Time is to expire, subject to valid modifications of the Contract authorized by Change Order.

6.3 FAILURE TO EXECUTE CONTRACT

Failure to return the signed Contract with acceptable Contract Bonds and Certificate of Insurance within fifteen (15) calendar days after the date of the Notice of Award shall be just cause for the cancellation of the award and the forfeiture of the Bid security, which shall become damages sustained. Award may then be made to the next lowest responsible Bidder, or the work may be re-advertised and constructed under Contract or otherwise, as the Owner may decide.

6.4 CONTRACTOR'S QUALIFICATION STATEMENT (Not Used)

6.5 CONTRACT BONDS REQUIREMENTS

6.5.1 The successful Bidder, where the Contract price exceeds twenty five thousand dollars ($25,000), shall post a one hundred percent (100%) Performance Bond and one hundred percent (100%) Labor and Material Payment Bond. Bonds shall be executed on Performance Bond and Labor and Material Bond forms attached hereto, with amount payable conforming to the terms of the Contract. Surety shall be a company licensed to do business in the State of New Mexico and acceptable to the Owner.

6.6 INSURANCE REQUIREMENTS

6.6.1 The selected Bidder shall purchase and maintain, with a company or companies licensed to do business in the State of New Mexico, Liability and Property Insurance as required by law.

6.6.2 The insurance shall be in limits not less than those stated in the insurance for, enclosed in the Bid package, or greater if required by law.

6.6.3 The insurance coverage shall include worker's compensation, employers liability, comprehensive general liability (Premises Operations, independent contractual liability, explosion and collapse hazard, underground hazard, personal injury), Comprehensive automobile liability (owned and hired), excess liability (umbrella form), and all-risk builder's risk. For more specific insurance requirements refer to page 8 of the AIA agreement.

6.6.4 All insurance coverage must be maintained for the entire life of the project. Products and completed operations coverage shall be maintained for a minimum period of one (1) year after final payment.

6.6.5 A valid certificate of insurance must be submitted to the Owner prior to issuance of a Notice-to-Proceed.

7.0 MINIMUM WAGE RATES

7.1 Pursuant to the requirements of any Contract entered into in excess of sixty thousand dollars ($60,000) for construction, alteration, demolition, or repair, or any combination of these, including painting and decorating of public buildings or public works, is subject to the minimum wage rate determination issued by the Office of the Labor Commissioner for this project. This project is subject to **SF-12-1359 B.**

7.2 The Bidder shall ensure that, in submitting his Bid, the minimum wage rate determination, include herein, has been utilized in preparing his Bid.

7.3 A summary of the City of Santa Fe Ordinance No. 2003-8, passed by the Santa Fe City Council on February 26,

2003 is attached. The proponent or bidder will be required to submit the proposal or bid such that it complies with the ordinance to the extent applicable. The recommended Contractor will be required to comply with the ordinance to the extent applicable, as well as any subsequent changes to the Ordinance throughout the term of this contract.

8.0 OTHER INSTRUCTIONS TO BIDDERS

8.1 The Owner will make copies of such reports available to any Bidder requesting them.. These reports are not guaranteed as to accuracy or completeness, nor are they part of the bidding documents. Before submitting his Bid, each Bidder shall, at his own expense, make such additional investigations and tests as the Bidder may deem necessary to determine his Bid for performance of the work in accordance with the time, price, and other terms and conditions of the Bidding Documents.

8.2 It shall be the responsibility of the successful Bidder to secure from the New Mexico Regulations & Licensing Department, Construction Industries Division (CID) such permits or licenses required to carry out the construction.

9.0 NEW MEXICO LABOR AND INDUSTRIAL DIVISION OF THE LABOR DEPARTMENT CONTRACTOR AND SUBCONTRACTOR REGISTRATION

9.1 Registration with the Labor and Industrial Division of the Labor Department. A contractor or subcontractor that submits a bid valued at more than fifty thousand dollars ($50,000) for a city project that is subject to the Public Works Minimum Wage Act (13-4-10 NMSA 1978) shall be registered with the labor and industrial division of the labor department. The registration number shall be provided in the bid submitted for the contractor in the space provided and for subcontractors with work proposed over $50,000 on the subcontractor form. After the bid opening, the registration number(s) will be verified by the City and the bid will be determined to be non-responsive and disqualified if the registration number(s) appear to be not valid and the contractor does not provide proof of the required registration for itself or its subcontractors with work proposed over fifty thousand dollars ($50,000). It is the responsibility of the contractor and the subcontractors to ensure the registration is completed prior to the bid opening.

PROCUREMENT SCOPE
(00 2400)

(00 2413) SCOPE OF BIDS

The Scope of Work together with all related work required for comprehensive, fully functioning, warrantied systems and finishing includes but is not limited to:

1. Complete removal of two existing dehumidification and climate control units and associated demolition work
2. Installation of two new dehumidification and climate control Pool Dehumidification Units (PDU's) including all necessary modifications and integration into the existing building systems including reconfiguration of the existing hydronic heating system
3. Installation of associated new ducting systems
4. Replacement, extension and/or modification of associated existing ducting systems
5. Installation of powered exhaust fan, with timer switch, in the roof above the Leisure Pool
6. Installation of powered exhaust fan, with thermostatic switch, in the roof above the main pump room.
7. Installation of powered exhaust fan, with thermostatic switch at the Therapy Pool dehumidifier heat loop supply boiler room
8. Installation of new cooling system to Natatorium offices 148 & 149
9. Coordination with and provision for the PDU control systems prime contractor as required to complete the unit controls scope of work for decommissioning of existing units and commissioning of new units and as specified in the contract documents.
10. Coordination with and provision for the roofing prime contractor as required to complete a partial replacement of the roof membrane in areas of new HVAC equipment installation that will become largely inaccessible after the new installation. This is anticipated to be approximately 10% or 300 SF of the associated roof area with demolition of the existing foam roof and replacement with tapered rigid insulation, cover board and cold applied BUR.
11. Provide allowance for repairs and modifications to the interior natatorium envelope as required for the proper functioning of dehumidification units and as necessary to maintain the room environment design criteria.
12. Provide allowance for preservation of function of the existing South Dectron Unit prior to its removal.
13. One mobilization from approximately May 18, 2015 through August 1, 2015 to substantially complete all interior and exterior work practicable *NOT REQUIRING* a Natatorium shutdown, including the removal of the north Dectron unit and preparation of duct work and the like for timely installation of the new PDU's during the August mobilization.
14. One mobilization from approximately August 1, 2015 through September 18, 2015 to complete all work *REQUIRING* a Natatorium shutdown, including removal of the south Dectron unit, installation and commissioning of the new PDU's, testing and balancing, controls configuration support and all other required work.
15. Any other related work associated with this improvement and as drawn and specified in the Construction Documents
16. All restorative patching and repair work in conjunction with the new work that is required to preserve the building's existing condition. The Contractor shall be responsible for preserving the integrity of existing systems and features affected by the performance of the new work and shall restore any features damaged during construction, during the time allotted for the project.
17. Provide standard 12 month Contractor's and Manufacturer's warranties on service, parts and labor.
18. Provide Additive Alternate for five year Manufacturer's warranty covering parts and labor on PDU-1 & PDU-2 complete.
19. Provide Additive Alternate for five year Manufacturer's warranty covering parts, labor and refrigerant on the refrigerant circuit of PDU-1 & PDU-2.
20. Provide Additive Alternate for three year Contractor's warranty in conjunction with the Manufacture's five year warranty alternates to inspect the new PDU's every three months and coordinate or perform necessary repairs to or replacement of defective or malfunctioning equipment.

Contractor shall be responsible for adherence to the Contract Documents, Construction Documents, Specifications and approved directives.
Contractor shall be responsible for State CID requirements and permit.
Contractor shall be responsible for verifications of all existing conditions, measurements and dimensions for bidding.
Contractor shall be responsible for all permits, fees, and State and/or City inspections associated with the construction.
Contractor shall be responsible for removal and securing of any existing equipment necessary to provide for the new work in accordance with the contract documents and to re-install these items in good work condition.

The City of Santa Fe is an Equal Opportunity Employer and all qualified applicants will receive consideration for employment without regard to race, color, religion, sex, sexual orientation or national origin. The successful Bidder will be required to conform to the Equal Opportunity Employment Regulations.

INFORMATION AVAILABLE TO BIDDERS
(00 3000)

(00 3100) EXISTING CONDITIONS

It is the Contractor's responsibility to verify existing conditions prior to bidding. A walk-through by the contractor at the facility is recommended prior to bidding.

Large vehicle and crane access to the site may require special coordination. The Contractor shall verify accessibility and take into consideration the access strategy as part of the offer.

Accessing the ductwork in the Natatorium may require special coordination. The Contractor shall verify accessibility and take into consideration the access strategy as part of the offer.

(00 3101) EXISTING FACILITY RECORD PLANS

Current record documents associated with this project are available for review upon request through the City of Santa Fe Facilities Division, Jason Kluck, 955-5937.

BID FORMS
(00 4100)

(00 4113) BID FORM - STIPULATED SUM (Single-Prime Contract)

Invitation No: RFB '1520/B

Project: CIP PROJECT #507N – GENOVEVA CHAVEZ COMMUNITY CENTER NATATORIUM DEHUMIDIFICATION SYSTEM REMODELING

Contractor:

Date: February 24, 2015

This Bid is submitted to: CITY OF SANTA FE
PURCHASING DIRECTOR
2651 SIRINGO ROAD, BUILDING H
SANTA FE, NEW MEXICO 87505

1. The undersigned Bidder proposes and agrees, if this Bid is accepted, to enter into an agreement with the Owner in the form included in the Bidding Documents to perform and furnish all work as specified or indicated in the Bidding Documents for the Contract Price and within the Contract Time indicated in this Bid and in accordance with the other terms and conditions of the Contract Documents.

2. The Bidder accepts all of the terms and conditions of the Invitation for Bid and Instructions to Bidders, including, without limitation, those dealing with the disposition of Bid security and other Bidding Documents. This Bid will remain subject to acceptance for *60 days after the day of Bid opening. The Bidder shall sign and submit the Agreement between Owner and Contractor (hereinafter called Agreement) with the bonds and other documents required by the Bidding Requirements within fifteen (15) calendar days after the date of the Owner's Notice to Award.

3. In submitting this Bid, the Bidder represents, as more fully set forth in the Agreement, that:

   A. The Bidder has examined copies of all the Bidding Documents and of the following Addenda (receipt of all of which is hereby acknowledged):

   No. _____ Date _____ No. _____ Date _____
   No. _____ Date _____ No. _____ Date _____
   No. _____ Date _____ No. _____ Date _____
   No. _____ Date _____ No. _____ Date _____

   B. The Bidder has familiarized himself with the nature and extent of the Bidding Documents, work, site, locality, and all local condition, laws, and regulations that in any manner may affect cost, progress, performance, or furnishing of the work.

   C. The Bidder has carefully studied all reports and drawings of subsurface conditions which are identified in the Information Available to Bidders and accepts the determination set forth in the Information Available to Bidders of the extent of the technical data contained in such reports and drawings upon which the Bidder is entitled to rely.

   D. The Bidder has correlated the results of all such observations, examinations, investigations, explorations, tests, reports, and studies with the terms and conditions of the Bidding Documents.

   E. The Bidder has given the Owner's Representative written notice of all conflicts, errors, or discrepancies that he has discovered in the Bidding Documents, and the written resolution thereof by the Owner's Representative is acceptable to the Bidder.

F. This Bid is genuine and not made in the interest of or on behalf of any undisclosed person, firm, or corporation and is not submitted inconformity with any agreement or rules of any group, association, organization, or corporations, the Bidder has not directly or indirectly induced or solicited any other Bidder to submit a false or sham Bid; the Bidder has not solicited or induced any person, firm or corporation to refrain from bidding; and the Bidder has not sought by collusion to obtain for himself any advantage over any other Bidder or over the Owner. It is understood that the Owner reserves the right to reject any or all Bids and to waive any technical irregularities in the bidding.

G. It is the intent of the City to award a Contract to the responsible Bidder submitting the lowest total option, provided the Bid has been submitted in accordance with the requirements of the Bidding Documents and is in the best interest of the City.

The Scope of Work together with all related work required for comprehensive, fully functioning, warrantied systems and finishing includes but is not limited to:

1. Complete removal of two existing dehumidification and climate control units and associated demolition work
2. Installation of two new dehumidification and climate control Pool Dehumidification Units (PDU's) including all necessary modifications and integration into the existing building systems including reconfiguration of the existing hydronic heating system
3. Installation of associated new ducting systems
4. Replacement, extension and/or modification of associated existing ducting systems
5. Installation of powered exhaust fan, with timer switch, in the roof above the Leisure Pool
6. Installation of powered exhaust fan, with thermostatic switch, in the roof above the main pump room.
7. Installation of powered exhaust fan, with thermostatic switch at the Therapy Pool dehumidifier heat loop supply boiler room
8. Installation of new cooling system to Natatorium offices 148 & 149
9. Coordination with and provision for the PDU control systems prime contractor as required to complete the unit controls scope of work for decommissioning of existing units and commissioning of new units and as specified in the contract documents.
10. Coordination with and provision for the roofing prime contractor as required to complete a partial replacement of the roof membrane in areas of new HVAC equipment installation that will become largely inaccessible after the new installation. This is anticipated to be approximately 10% or 300 SF of the associated roof area with demolition of the existing foam roof and replacement with tapered rigid insulation, cover board and cold applied BUR.
11. Provide allowance for repairs and modifications to the interior natatorium envelope as required for the proper functioning of dehumidification units and as necessary to maintain the room environment design criteria.
12. Provide allowance for preservation of function of the existing South Dectron Unit prior to its removal.
13. One mobilization from approximately May 18, 2015 through August 1, 2015 to substantially complete all interior and exterior work practicable and *NOT REQUIRING* a Natatorium shutdown, including the removal of the north Dectron unit and preparation of duct work and the like for timely installation of the new PDU's during the August mobilization.
14. One mobilization from approximately August 1, 2015 through September 18, 2015 to complete all work *REQUIRING* a Natatorium shutdown, including removal of the south Dectron unit, installation and commissioning of the new PDU's, testing and balancing, controls configuration support and all other work.
15. Any other related work associated with this improvement and as drawn and specified in the Construction Documents
16. All restorative patching and repair work in conjunction with the new work that is required to preserve the building's existing condition. The Contractor shall be responsible for preserving the integrity of existing systems and features affected by the performance of the new work and shall restore any features damaged during construction, during the time allotted for the project.
17. Provide standard 12 month Contractor's and Manufacturer's warranties on service, parts and labor.
18. Provide Additive Alternate for five year Manufacturer's warranty covering parts and labor on PDU-1 & PDU-2 complete.
19. Provide Additive Alternate for five year Manufacturer's warranty covering parts, labor and refrigerant on the refrigerant circuit of PDU-1 & PDU-2.
20. Provide Additive Alternate for three year Contractor's warranty in conjunction with the Manufacture's five year warranty alternates to inspect the new PDU's every three months and coordinate or perform necessary repairs to or replacement of defective or malfunctioning equipment.

Contractor shall be responsible for adherence to the Contract Documents, Construction Documents, Specifications and approved directives.
Contractor shall be responsible for State CID requirements and permit.
Contractor shall be responsible for verifications of all existing conditions, measurements and dimensions for bidding.
Contractor shall be responsible for all permits, fees, and State and/or City inspections associated with the construction.
Contractor shall be responsible for removal and securing of any existing equipment necessary to provide for the new work in

accordance with the contract documents and to re-install these items in good work condition.

The Bidder will complete the work for the following price(s):

Base
Bid_____

_____($_____)
(use words)

Allowance 1: Natatorium room envelope repairs:

Fifteen thousand dollars and zero cents_____($15,000.00)
(use words) Included under Base Bid exclusive of Gross Receipt Tax

Allowance 2: Existing South Dectron Unit function preservation prior to removal.

Five thousand dollars and zero cents _____($5,000.00)
(use words) Included under Base Bid exclusive of Gross Receipt Tax

Base Bid Plus Allowances

_____($_____)
(use words)

Gross Receipts Tax
(8.1875%)

_____($_____)
(use words)

Total Base Bid Plus Tax

_____($_____)
(use words)

Alternate #1: Provide five year Manufacturer's warranty covering parts and labor on PDU-1 & PDU-2 complete.

_____($_____)
(use words) Inclusive of Gross Receipt Tax

Alternate #2: Provide five year Manufacturer's warranty covering parts, labor and refrigerant on the refrigerant circuit of PDU-1 & PDU-2.

_____($_____)
(use words) Inclusive of Gross Receipt Tax

Alternate #3: Provide three year Contractor's warranty in conjunction with the Manufacture's five year warranty alternates to inspect the new PDU's every three months and coordinate or perform necessary repairs to or replacement of defective or malfunctioning equipment.

_____($_____)
(use words) Inclusive of Gross Receipt Tax

4. The Bidder agrees that:

   A. The work to be performed under the Contract shall commence not later than ten (10) consecutive calendar days after the date of written Notice to Proceed, and that completion of the Base Bid shall be achieved not later than 60 calendar days after the date of written "Notice to Proceed", except as hereafter extended by valid written "Change Order" by the Owner.

   B. Should the Contractor neglect, refuse, or otherwise fail to complete the work within the time specified, the Contractor agrees, in partial consideration for the award of this Contract, to pay the Owner the amount of Two Hundred Fifty Dollars ($250) per consecutive calendar days, not as a penalty, but as liquidated damages for such breach of the Contract.

   C. The above process shall include all labor, profit, insurance, taxes, etc., to cover the finished work of the several kinds called for. Changes shall be processed in accordance with the Contract Documents.

   D. It is understood that the Owner reserves the right to reject any or all Bids and to waive any technical irregularities in the bidding.

5. The following documents are attached to and made a condition of this Bid:

   A. Bid Security only for the highest bid option.
   B. Non-Collusion Affidavit of Prime Bidder
   C. Certificate of Bidder Regarding Equal Employment Opportunity
   D. Certificate of Non-Segregated Facilities
   E. The state or any political subdivision of the state shall not accept a bid on a public works project subject to the Public Works Minimum Wage Act from a prime contractor that does not provide proof of required registration for itself.

   If any of the above requirements have not been met, the bid shall not be read.

6. The terms used in this Bid and the Bidding and Contract Documents which are defined in the Conditions of the Construction Contract (General, Supplementary, and Other Conditions)

7. If the Bidder is:

   A. AN INDIVIDUAL:

   By:_____
   (Individual's Name)

   doing business as:
   _____

   Business address:
   _____

   _____

   Telephone:_____

(SEAL)

B. A PARTNERSHIP:

By:_____
(Firm Name)

_____
(General Partner)

Business Address:

_____

_____

Telephone:_____

(SEAL)

C. A CORPORATION

By:_____
(Corporation Name)

_____
(State of Incorporation)

By:_____
(Name of person authorized to sign)

_____
(Title)

If a New Mexico
Corporation:_____
Certificate of Incorporation No.

If a Foreign Corporation: _____
Certificate of Authority No.

Attest: _____
(Secretary)

Business address: _____

Telephone: _____

D. A JOINT VENTURE

By:_____
(Name)

Address: _____

By:_____
(Name)

Address:_____

Each joint venture must sign. The manner of signing for each individual, partnership, and corporation that is a party to the joint venture should be in the manner indicated in the appropriate category.

Bidder must fill in the following: (If none, write none)

NM License No.: _____ Classification: _____

NM Taxation and Revenue CRS No.: _____

City of Santa Fe Business Registration No.: _____

NM Resident Preference Number (if applicable):_____

One Original and one copy of the Bid Submittal is required

SUPPLEMENT TO BID FORMS
(00 4300-4500)

(00 4313) BID SECURITY FORM

Review and Approval: This Bond has been executed by a Surety named in the current list of "Companies Holding Certificates of Authority as Acceptable Sureties on Federal Bonds and as Acceptable Reinsuring Companies," as published in Circular 570 (amended) by the Audit Staff Bureau of Accounts, United States Treasury Department.

Approved:

_____ DATE:

_____
Owner's Representative or Governing Authority

THIS FORM MUST ACCOMPANY THE BID BOND

THIS FORM MUST BE
USED BY SURETY

(00 4517) AGENT'S AFFIDAVIT

BID SECURITY FORM

(To be filled in by Agent)

STATE OF)
) ss.
COUNTY OF)

_____ being first duly sworn deposes and says:

that he is the duly appointed agent for
_____
and licensed in the State of New Mexico. Deponent further states that a certain bond given to indemnify the State of New Mexico

in connection with the construction of
_____

dated _____ day of _____, 20___, executed by

_____

contractor, as principal and _____, as surety, signed by this

deponent; and deponent further states that said bond was written, signed, and delivered by him; that the premium on the same has

been or will be collected by him; and that the full commission thereon has been or will be retained by him.

_____

Subscribed and sworn to before me, a notary public in and for the County of _____, this _____ day of _____, 20_____.

My Commission expires: _____

Agent's Address: _____

_____

Telephone: _____

(00 4518) SUBCONTRACTOR LISTING

Note: A subcontractor that submits a bid valued at more than fifty thousand dollars ($50,000) for a city project that is subject to the Public Works Minimum Wage Act 13-4-10 NMSA 1978) shall be registered with the labor and industrial division of the labor department.

Section 00430

TRADE	NAME	ADDRESS	TELEPHONE#	LICENSE #	NM DEPT. OF LABOR REGISTRATION # (IF APPLICABLE)	SUBCONTRACTOR SIGNATURE - TO BE OBTAINED AFTER AWARD OF CONTRACT

(00 4519) NON-COLLUSION AFFIDAVIT OF PRIME BIDDER

STATE OF)
)ss.
COUNTY OF)

_____, being first duly sworn, deposes and says that:

1) He is the _____of _____, the Bidder that has submitted and attached Bid;

2) He is fully informed respecting the preparation and contents of the attached Bid and of all pertinent circumstances respecting such Bid;

3) Such Bid is genuine and is not a collusive or sham Bid;

4) Neither the said Bidder nor any of its officers, partners, owners, agents, representatives, employees, or parties in interest, including this affiant, has in any way colluded, conspired, connived or agreed, directly or indirectly with the Bidder, firm or person to submit a collusive or sham Bid in connection with the Contract for which the attached Bid has been submitted or to refrain from bidding in connection with such Contract or has in any manner directly or indirectly, sought by agreement or collusion or communications or conference with any other Bidder, firm or person to fix the price or prices in the attached Bid or of any other Bidder, or to fix any overhead, profit or cost element of the Bid price or the Bid price of any other Bidder, or to secure through any collusion, conspiracy, connivance or unlawful agreement any advantage against the City of Santa Fe, or any person interested in the proposed Contract; and

5) The price or prices quoted in the attached Bid are fair and proper and are not tainted by any collusion, conspiracy, connivance or unlawful agreement on the part of the Bidder or any of its agents, representatives, owners, employees, or parties in interest, including this affront.

By: _____

Title: _____

Subscribed and sworn to before me this _____ day of _____, 20___.

_____
Notary Public

My Commission expires: _____

(00 4533) CERTIFICATION OF NONSEGREGATED FACILITIES

(Applicable to construction contracts and related subcontracts exceeding $10,000 which are not exempt from the Equal Opportunity Clause.)

The construction contractor certifies that he does not maintain or provide for his employees any segregated facilities at any of his establishments and that he does not permit his employees to perform their services at any location, under his control, where segregated facilities are maintained. The construction contractor certifies further that he will not maintain or provide for his employees any segregated facilities at any of his establishments, and that he will not permit his employees to perform their services at any location, under his control, where segregated facilities are maintained. The construction contractor agrees that a breach of this certification is a violation of the Equal Opportunity Clause in this contract. As used in this certification, the term "segregated facilities" means: any waiting room, work areas, rest rooms and wash rooms, restaurants and other eating areas; time clocks, locker rooms and other storage or dressing areas, parking lots, drinking fountains, recreation or entertainment areas, transportation, and housing facilities provided for employees which are segregated by explicit directive or are in fact segregated on the basis of race, creed, color, or national origin because of habit, local custom, or otherwise. The construction contractor agrees that (except where he has obtained identical certifications from proposed Subcontractors for specific time periods) he will obtain identical certifications from proposed SUBCONTRACTORS prior to the award of subcontracts exceeding $10,000 which are not exempt from the provision of the Equal Opportunity Clause and that he will retain such certifications in his files.

By: _____
Title: _____

Subscribed and sworn to before me this _____ day of _____, 20___.

_____
Notary Public

My Commission expires: _____

(00 4534) INSTRUCTIONS RELATING TO LOCAL PREFERENCE CERTIFICATION FORM

1. All information must be provided. A 10% local preference may be available for this procurement. To qualify for this preference, an offeror must complete and submit the local preference certification form with its offer. If an offer is received without the form attached, completed, notarized, and signed or if the form is received without the required information, the preference will not be applied. The local preference form or a corrected form will not be accepted after the deadline for receipt of bids or proposals.

2. Local Preference precedence over State Preference: The Local Preference takes precedence over the State Resident Preference and only one such preference will be applied to any one bid or proposal. If it is determined that the local preference applies to one or more offerors in any solicitation, the State Resident Preference will not be applied to any offers.

3. Principal Office and location must be stated: To qualify for the local preference, the principal place of business of the enterprise must be physically located within the Santa Fe County Geographic Boundaries. The business location inserted on the Form must be a physical location, street address or such. DO NOT use a post office box or other postal address. Principal place of business must have been established no less than six months preceding application for certification.

4. Subcontractors do not qualify: Only the business, or if joint venture, one of the parties of the joint venture, which will actually be performing the services or providing the goods solicited by this request and will be responsible under any resulting contract will qualify for this preference. A subcontractor may not qualify on behalf of a prime contractor.

5. Definition: The following definition applies to this preference.

   A local business is an entity with its Principal office and place of business located in Santa Fe County.
   A Principal office is defined as: The main or home office of the business as identified in tax returns, business licenses and other official business documents. A Principal office is the primary location where the business conducts its daily operations, for the general public, if applicable. A temporary location or movable property, or one that is established to oversee a City of Santa Fe project does not qualify as a Principal office.

Additional Documentation: If requested a business will be required to provide, within 3 working days of the request, documentation to substantiate the information provided on the form. Any business which must be registered under state law must be able to show that it is a business entity in good standing if so requested.

(00 4534.1) LOCAL PREFERENCE CERTIFICATION FORM

RFP/RFB NO: '15/20/B

Business Name: _____

Principal Office: _____
Street Address City State Zip Code

City of Santa Fe Business License #_____ (Attach Copy to this Form)

Date Principal Office was established: _____ (Established date must be six months before date of Publication of this RFP or RFB).

CERTIFICATION

I hereby certify that the business set out above is the principal Offeror submitting this offer or is one of the principal Offerors jointly submitting this offer (e.g. as a partnership, joint venture). I hereby certify that the information which I have provided on this Form is true and correct, that I am authorized to sign on behalf of the business set out above and, if requested by the City of Santa Fe, will provide within 3 working days of receipt of notice, the necessary documents to substantiate the information provided on this Form.

Signature of Authorized Individual: _____

Printed Name: _____

Title: _____ Date: _____

Subscribed and sworn before me by_____ this____, day of _____

My commission expires_____ _____
Notary Public

SEAL

THIS FORM MUST ACCOMPANY THE BID

(00 4535) RESIDENT VETERANS PREFERENCE CERTIFICATION

_____ (NAME OF CONTRACTOR) hereby certifies the following in regard to application of the resident veterans' preference to this procurement.

Please check one box only:

☐I declare under penalty of perjury that my business prior year revenue starting January 1 ending December 31 is less than $1M allowing me the 10% preference discount on this solicitation. I understand that knowingly giving false or misleading information about this fact constitutes a crime.

☐ I declare under penalty of perjury that my business prior year revenue starting January 1 ending December 31 is more than $1M but less than $5M allowing me the 8% preference discount on this solicitation. I understand that knowingly giving false or misleading information about this fact constitutes a crime.

☐ I declare under penalty of perjury that my business prior year revenue starting January 1 ending December 31 is more than $5M allowing me the 7% preference discount on this solicitation. I understand that knowingly giving false or misleading information about this fact constitutes a crime.

I agree to submit a report or reports to the State Purchasing Division of the General Services Department declaring under penalty of perjury that during the last calendar year starting January 1 and ending on December 31, the following to be true and accurate:

In conjunction with this procurement and the requirements of this business application for a Resident Veteran Business Preference/Resident Veteran Contractor Preference under Sections 13-1-21 or 13-1-22 NMSA 1978, which awarded a contract which was on the basis of having such veterans preference, I agree to report to the State Purchasing Division of the General Services Department the awarded amount involved. I will indicate in the report the award amount as a purchase from a public body or as a public works contract from a public body as the case may be.

I understand that knowingly giving false or misleading information on this report constitutes a crime.

I declare under penalty of perjury that this statement is true to the best of my knowledge. I understand that giving false or misleading statements about material fact regarding this matter constitutes a crime.

_____ _____

(Signature of Business Representative)* (Date)

*Must be an authorized signatory of the Business.

The representation made by checking the above boxes constitutes a material representation by the business. If the statements are proven to be incorrect, this may result in denial of an award or un-award of the procurement.

SIGNED AND SEALED THIS_____DAY OF _____, 20__.

_____

NOTARY PUBLIC

My Commission Expires:

_____

(00 4545) STATEMENT OF INTENT TO PAY PREVAILING WAGES

(00 4546) CERTIFICATION OF BIDDER REGARDING EQUAL EMPLOYMENT OPPORTUNITY

INSTRUCTIONS

This certification is required pursuant to Executive Order 11246 (30 F.R. 12319-25). The implementing rules and regulations provide that any Bidder or perspective contractor, or any of their proposed Subcontractors, shall state as an initial part of the Bid or negotiations of the Contract whether he has participated in any previous Contract or subcontract subject to the equal opportunity clause; and, if so, whether he has filed all compliance reports due under applicable instructions.

Where the certification indicates that the Bidder has not filed a compliance report due under applicable instructions, such Bidder shall be required to submit a compliance report within seven calendar days after Bid opening. No Contract shall be awarded unless such report is submitted.

CERTIFICATION BY BIDDER

Bidder's Name: _____

Address: _____

_____

1. Bidder has participated in a previous Contract or subcontract subject to the equal Opportunity Clause.

   _____ Yes _____ No

2. Compliance reports were required to be filed in connection with such Contract or subcontract.

   _____ Yes _____ No

Certification - The information above is true and complete to the best of my knowledge and belief.

_____
Name and Title of Signer (please type)

_____ _____
Signature Date

AGREEMENT FORMS
(00 5200)

(00 5213) AGREEMENT (AIA A101 – 2007 Standard Form of Agreement Between Owner and Contractor (Stipulated Sum)

(00 5214) AIA GENERAL CONDITIONS (AIA A201 – 2007 General Conditions of the Contract for Construction)

AIA® Document A101™ – 2007

Standard Form of Agreement Between Owner and Contractor where the basis of payment is a Stipulated Sum

FOR REQUEST FOR BID (RFB) PURPOSES ONLY

AGREEMENT made as of the TBD day of TBD in the year 2015

BETWEEN the Owner:

City of Santa Fe
200 Lincoln Avenue
Santa Fe, New Mexico 87501
(505) 955-5937

and the Contractor:

yet to be determined

for the following Project:

CIP #507N – Genoveva Chavez Community Center (GCCC) Natatorium Dehumidification System Remodeling

The Engineer:

The Response Group, Inc.
11930 Menaul Blvd. NE, Ste. 214
Albuquerque, NM 87112
(505) 323-7629

The Owner and Contractor agree as follows.

ADDITIONS AND DELETIONS:
The author of this document has added information needed for its completion. The author may also have revised the text of the original AIA standard form. An *Additions and Deletions Report* that notes added information as well as revisions to the standard form text is available from the author and should be reviewed. A vertical line in the left margin of this document indicates where the author has added necessary information and where the author has added to or deleted from the original AIA text.

This document has important legal consequences. Consultation with an attorney is encouraged with respect to its completion or modification.

AIA Document A201™–2007, General Conditions of the Contract for Construction, is adopted in this document by reference. Do not use with other general conditions unless this document is modified.

AIA Document A101™ – 2007. Copyright © 1915, 1918, 1925, 1937, 1951, 1958, 1961, 1963, 1967, 1974, 1977, 1987, 1991, 1997 and 2007 by The American Institute of Architects. **All rights reserved.** WARNING: This AIA® Document is protected by U.S. Copyright Law and International Treaties. Unauthorized reproduction or distribution of this AIA® Document, or any portion of it, may result in severe civil and criminal penalties, and will be prosecuted to the maximum extent possible under the law. This document was produced by AIA software at 10:55:09 on 02/12/2015 under Order No.2014561723_1 which expires on 02/09/2016, and is not for resale.
User Notes:

TABLE OF ARTICLES

1 THE CONTRACT DOCUMENTS

2 THE WORK OF THIS CONTRACT

3 DATE OF COMMENCEMENT AND SUBSTANTIAL COMPLETION

4 CONTRACT SUM

5 PAYMENTS

6 DISPUTE RESOLUTION

7 TERMINATION OR SUSPENSION

8 MISCELLANEOUS PROVISIONS

9 ENUMERATION OF CONTRACT DOCUMENTS

10 INSURANCE AND BONDS

ARTICLE 1 THE CONTRACT DOCUMENTS

The Contract Documents consist of this Agreement, Conditions of the Contract (General, Supplementary and other Conditions), Drawings, Specifications, Addenda issued prior to execution of this Agreement, other documents listed in this Agreement and Modifications issued after execution of this Agreement, all of which form the Contract, and are as fully a part of the Contract as if attached to this Agreement or repeated herein. The Contract represents the entire and integrated agreement between the parties hereto and supersedes prior negotiations, representations or agreements, either written or oral. An enumeration of the Contract Documents, other than a Modification, appears in Article 9.

ARTICLE 2 THE WORK OF THIS CONTRACT

The Contractor shall fully execute the Work described in the Contract Documents, except as specifically indicated in the Contract Documents to be the responsibility of others.

ARTICLE 3 DATE OF COMMENCEMENT AND SUBSTANTIAL COMPLETION

§ 3.1 The date of commencement of the Work shall be the date of this Agreement unless a different date is stated below or provision is made for the date to be fixed in a notice to proceed issued by the Owner.

(Paragraphs deleted)

The date of commencement of the work will be the date on the Notice to Proceed from the Owner

§ 3.2 The Contract Time shall be measured from the date of commencement.

§ 3.3 The Contractor shall achieve Substantial Completion of the entire Work not later than one hundred thirty (130) days from the date of

(Paragraphs deleted)

commencement subject to adjustments of this Contract Time as provided by the Contract Documents.

(Paragraph deleted)

AIA Document A101™ – 2007. Copyright © 1915, 1918, 1925, 1937, 1951, 1958, 1961, 1963, 1967, 1974, 1977, 1987, 1991, 1997 and 2007 by The American Institute of Architects. **All rights reserved.** WARNING: This AIA® Document is protected by U.S. Copyright Law and International Treaties. Unauthorized reproduction or distribution of this AIA® Document, or any portion of it, may result in severe civil and criminal penalties, and will be prosecuted to the maximum extent possible under the law. This document was produced by AIA software at 10:55:09 on 02/12/2015 under Order No.2014561723_1 which expires on 02/09/2016, and is not for resale.
User Notes: (1680562809)

Liquidated damages of two hundred fifty ($250.00) per calendar day will apply for work not completed by the Substantial Completion date.

ARTICLE 4 CONTRACT SUM

§ 4.1 The Owner shall pay the Contractor the Contract Sum in current funds for the Contractor's performance of the Contract. The Contract Sum shall be yet to be determined ($ TBD), subject to additions and deductions as provided in the Contract Documents.

§ 4.2 The Contract Sum is based upon the following alternates, if any, which are described in the Contract Documents and are hereby accepted by the Owner:
(Paragraph deleted)
yet to be determined

§ 4.3 Allowances included in the Contract Sum, if any:

Item	Price
Natatorium room envelope repairs	$15,000.00
Existing South Dectron Unit function preservation prior to removal	$5,000.00

(Table deleted)
(Paragraphs deleted)

ARTICLE 5 PAYMENTS

§ 5.1 PROGRESS PAYMENTS

§ 5.1.1 Based upon Applications for Payment submitted to the Engineer by the Contractor and Certificates for Payment issued by the Engineer, the Owner shall make progress payments on account of the Contract Sum to the Contractor as provided below and elsewhere in the Contract Documents.

§ 5.1.2 The period covered by each Application for Payment shall be one calendar month ending on the last day of the month.

§ 5.1.3 Provided that an Application for Payment is received by the Engineer not later than the 1st day of a month, the Owner shall make payment of the certified amount to the Contractor not later than the 21st day of the month. If an Application for Payment is received by the Engineer after the application date fixed above, payment shall be made by the Owner not later than twenty one (21) days after the Engineer receives the Application for Payment.

§ 5.1.4 Each Application for Payment shall be based on the most recent schedule of values submitted by the Contractor in accordance with the Contract Documents. The schedule of values shall allocate the entire Contract Sum among the various portions of the Work. The schedule of values shall be prepared in such form and supported by such data to substantiate its accuracy as the Engineer may require. This schedule, unless objected to by the Engineer, shall be used as a basis for reviewing the Contractor's Applications for Payment.

§ 5.1.5 Applications for Payment shall show the percentage of completion of each portion of the Work as of the end of the period covered by the Application for Payment.

§ 5.1.6 Subject to other provisions of the Contract Documents, the amount of each progress payment shall be computed as follows:

.1 Take that portion of the Contract Sum properly allocable to completed Work as determined by multiplying the percentage completion of each portion of the Work by the share of the Contract Sum allocated to that portion of the Work in the schedule of values. pending final determination of cost to the Owner of changes in the Work, amounts not in dispute shall be included as provided in Section 7.3.9 of AIA Document A201™–2007, General Conditions of the Contract for Construction;

.2 Add that portion of the Contract Sum properly allocable to materials and equipment delivered and suitably stored at the site for subsequent incorporation in the completed construction (or, if approved in advance by the Owner, suitably stored off the site at a location agreed upon in writing).

AIA Document A101™ – 2007. Copyright © 1915, 1918, 1925, 1937, 1951, 1958, 1961, 1963, 1967, 1974, 1977, 1987, 1991, 1997 and 2007 by The American Institute of Architects. **All rights reserved.** WARNING: This AIA® Document is protected by U.S. Copyright Law and International Treaties. Unauthorized reproduction or distribution of this AIA® Document, or any portion of it, may result in severe civil and criminal penalties, and will be prosecuted to the maximum extent possible under the law. This document was produced by AIA software at 10:55:09 on 02/12/2015 under Order No.2014561723_1 which expires on 02/09/2016, and is not for resale.
User Notes: (1680562809)

.3 Subtract the aggregate of previous payments made by the Owner; and

.4 Subtract amounts, if any, for which the Engineer has withheld or nullified a Certificate for Payment as provided in Section 9.5 of AIA Document A201–2007.

§ 5.1.7 The progress payment amount determined in accordance with Section 5.1.6 shall be further modified under the following circumstances:

.1 Add, upon Substantial Completion of the Work, a sum sufficient to increase the total payments to the full amount of the Contract Sum, less such amounts as the Engineer shall determine for incomplete Work, retainage applicable to such work and unsettled claims; and

.2 Add, if final completion of the Work is thereafter materially delayed through no fault of the Contractor, any additional amounts payable in accordance with Section 9.10.3 of AIA Document A201–2007.

§ 5.1.8

(Paragraphs deleted)

Except with the Owner's prior approval, the Contractor shall not make advance payments to suppliers for materials or equipment which have not been delivered and stored at the site.

(Paragraph deleted)

§ 5.2 FINAL PAYMENT

§ 5.2.1 Final payment, constituting the entire unpaid balance of the Contract Sum, shall be made by the Owner to the Contractor when

.1 the Contractor has fully performed the Contract except for the Contractor's responsibility to correct Work as provided in Section 12.2.2 of AIA Document A201–2007, and to satisfy other requirements, if any, which extend beyond final payment; and

.2 a final Certificate for Payment has been issued by the Engineer.

§ 5.2.2 The Owner's final payment to the Contractor shall be made no later than 21 days after the issuance of the Engineer's final Certificate for Payment, or as follows:

Within fifteen days of the Contractor's request for final payment being submitted by the Contractor to the City, provided the Owner has received the Consent of Surety, Waivers, Releases of Liens, Final Certified Payroll, applicable State, Manufacturer and Vendor inspections, Certificate of Occupancy, CID Permit Summary, As-Built documents, all applicable Warranties, Operations & Maintenance manuals, completed final Punch List, walk through(s) and trainings.

ARTICLE 6 DISPUTE RESOLUTION

§ 6.1 INITIAL DECISION MAKER

The City will serve as Initial Decision Maker pursuant to Section 15.2 of AIA Document A201–2007, unless the parties appoint below another individual, not a party to this Agreement, to serve as Initial Decision Maker.

(Paragraphs deleted)

§ 6.2 BINDING DISPUTE RESOLUTION

For any Claim subject to, but not resolved by, mediation pursuant to Section 15.3 of AIA Document A201–2007, the method of binding dispute resolution shall be as follows:

[ ] Arbitration pursuant to Section 15.4 of AIA Document A201–2007

[ ] Litigation in a court of competent jurisdiction

[X] *In accordance with New Mexico Public Works Mediation Act 13-4C-1 through 13-4C-11, NMSA 1978*

AIA Document A101™ – 2007. Copyright © 1915, 1918, 1925, 1937, 1951, 1958, 1961, 1963, 1967, 1974, 1977, 1987, 1991, 1997 and 2007 by The American Institute of Architects. **All rights reserved.** WARNING: This AIA® Document is protected by U.S. Copyright Law and International Treaties. Unauthorized reproduction or distribution of this AIA® Document, or any portion of it, may result in severe civil and criminal penalties, and will be prosecuted to the maximum extent possible under the law. This document was produced by AIA software at 10:55:09 on 02/12/2015 under Order No.2014561723_1 which expires on 02/09/2016, and is not for resale.

User Notes: (1680562809)

ARTICLE 7 TERMINATION OR SUSPENSION

§ 7.1 The Contract may be terminated by the Owner or the Contractor as provided in Article 14 of AIA Document A201–2007. This Agreement may be terminated by the City upon thirty (30) days written notice to the Contractor. The Contractor shall render a final report of the services performed up to the date of termination and shall turn over to the City original copies of all work product, research or papers prepared under this Agreement. If compensation is not based upon hourly rates for services rendered, the City shall pay the Contractor for the reasonable value of services satisfactorily performed and accepted by the City through the date Contractor receives notice of such termination, and for which compensation has not already been paid and prior approved reimbursable expenses incurred through the date Contractor receives notice of such termination.

§ 7.2 The Work may be suspended by the Owner as provided in Article 14 of AIA Document A201–2007.

ARTICLE 8 MISCELLANEOUS PROVISIONS

§ 8.1 Where reference is made in this Agreement to a provision of AIA Document A201–2007 or another Contract Document, the reference refers to that provision as amended or supplemented by other provisions of the Contract Documents.

§ 8.2 The Owner's representative:

Jason M. Kluck or other authorized Public Works Project Administrator or Director
Project Administrator
Facilities Division, Public Works Department
City of Santa Fe
2651 Siringo Road, Building E, Santa Fe, New Mexico, 87505
(505) 955-5937

§ 8.3 The Contractor's representative:

yet to be determined

§ 8.4
(Paragraphs deleted)
Neither the Owner's nor the Contractor's representative shall be changed without ten days written notice to the other party.

§ 8.5 Other provisions:

§ 8.5 1 INDEMNIFICATION

The Contractor shall indemnify, hold harmless and defend the City and the Engineer from all losses, damages, claims or judgements, including payments of all attorneys' fees and costs on account of any suit, judgment, execution, claim, action or demand whatsoever arising from Contractor's performance under this Agreement as well as the performance of Contractor's employees, agents, representatives and subcontractors.

(Paragraphs deleted)

§ 8.5.2 APPROPRIATIONS

The terms of this Agreement are contingent upon sufficient appropriations and authorization being made by the City for the performance of this Agreement. If sufficient appropriations and authorization are not made by the

AIA Document A101™ – 2007. Copyright © 1915, 1918, 1925, 1937, 1951, 1958, 1961, 1963, 1967, 1974, 1977, 1987, 1991, 1997 and 2007 by The American Institute of Architects. **All rights reserved.** WARNING: This AIA® Document is protected by U.S. Copyright Law and International Treaties. Unauthorized reproduction or distribution of this AIA® Document, or any portion of it, may result in severe civil and criminal penalties, and will be prosecuted to the maximum extent possible under the law. This document was produced by AIA software at 10:55:09 on 02/12/2015 under Order No.2014561723_1 which expires on 02/09/2016, and is not for resale.
User Notes: (1680562809)

City, this Agreement shall terminate upon written notice being given by the City to the Contractor. The City's decision as to whether sufficient appropriations are available shall be accepted by the Contractor and shall be final.

§ 8.5.3 THIRD PARTY BENEFICIARIES

By entering into this Agreement, the parties do not intend to create any right, title or interest in or for the benefit of any person other than the City and the Contractor. No person shall claim any right, title or interest under this Agreement or seek to enforce this Agreement as a third party beneficiary of this Agreement.

§ 8.5.4 STATUS OF CONTRACTOR; RESPONSIBILITY FOR PAYMENT OF EMPLOYEES AND SUBCONTRACTORS

A. The Contractor and its agents and employees are independent contractors performing professional services for the City and are not employees of the City. The Contractor, and its agents and employees, shall not accrue leave, retirement, insurance, bonding, use of City vehicles, or any other benefits afforded to employees of the City as a result of this Agreement.

B. Contractor shall be solely responsible for payment of wages, salaries and benefits to any and all employees or subcontractors retained by Contractor in the performance of the services under this Agreement.

C. The Contractor shall comply with City of Santa Fe Minimum Wage, Article 28-1-SFCC 1987, as well as any subsequent changes to such article throughout the term of this Agreement.

§ 8.5.5 CONFLICT OF INTEREST

The Contractor warrants that it presently has no interest and shall not acquire any interest, direct or indirect, which would conflict in any manner or degree with the performance of services required under this Agreement. Contractor further agrees that in the performance of this Agreement no persons having any such interests shall be employed.

§ 8.5.6 ASSIGNMENT: SUBCONTRACTING

The Contractor shall not assign or transfer any rights, privileges, obligations or other interest under this Agreement, including any claims for money due, without the prior written consent of the City. The Contractor shall not subcontract any portion of the services to be performed under this Agreement without the prior written approval of the City.

§ 8.5.7 RELEASE

The Contractor, upon acceptance of final payment of the amount due under this Agreement, releases the City, its officers and employees, from all liabilities, claims and obligations whatsoever arising from or under this Agreement. The Contractor agrees not to purport to bind the City to any obligation not assumed herein by the City unless the Contractor has express written authority to do so, and then only within the strict limits of that authority.

§ 8.5.8 INSURANCE

A. The contractor, at its own cost and expense, shall carry and maintain in full force and effect during the term of this Agreement, comprehensive general liability insurance covering bodily injury and property damage liability, in a form and with an insurance company acceptable to the City, with limits of coverage in the maximum amount which the City could be held liable under the New Mexico Tort Claims Act for each person injured and for

AIA Document A101™ – 2007. Copyright © 1915, 1918, 1925, 1937, 1951, 1958, 1961, 1963, 1967, 1974, 1977, 1987, 1991, 1997 and 2007 by The American Institute of Architects. **All rights reserved.** WARNING: This AIA® Document is protected by U.S. Copyright Law and International Treaties. Unauthorized reproduction or distribution of this AIA® Document, or any portion of it, may result in severe civil and criminal penalties, and will be prosecuted to the maximum extent possible under the law. This document was produced by AIA software at 10:55:09 on 02/12/2015 under Order No.2014561723_1 which expires on 02/09/2016, and is not for resale.
User Notes:

each accident resulting in damage to property. Such insurance shall provide that the City is named as an additional insured and that the City is notified no less than 30 days in advance of cancellation for any reason. The Contractor shall furnish the City with a copy of a Certificate of Insurance as a condition prior to performing services under this Agreement.

B. Contractor shall also obtain and maintain Workers' compensation insurance, required by law, to provide coverage for Contractor's employees throughout the term of this Agreement. Contractor shall provide the City with evidence of its compliance with such requirement.

§ 8.5.9 RECORDS AND AUDIT

The contractor shall maintain, throughout the term of this Agreement and for a period of three years thereafter, detailed records that indicate the date, time and nature of services rendered. These records shall be subject to inspection by the City, the Department of Finance and Administration, and the State Auditor. The City shall have the right to audit the billing both before and after payment. Payment under this Agreement shall not foreclose the right of the City to recover excessive or illegal payments.

§ 8.5.10 APPLICABLE LAW: CHOICE OF LAW: VENUE

Contractor shall abide by all applicable federal and state laws and regulations, and all ordinances, rules and regulations of the City of Santa Fe. In any action, suit or legal dispute arising from this Agreement, the Contractor agrees that the laws of the State of New Mexico shall govern. The parties agree that any action or suit arising from this Agreement shall be commenced in a federal or state court of competent jurisdiction in New Mexico. Any action or suit commenced in the courts of the State of New Mexico shall be brought in the First Judicial District Court.

§ 8.5.11 AMENDMENT

This Agreement shall not be altered, changed or modified except by an amendment in writing executed by the parties hereto.

§ 8.5.12 NON-DISCRIMINATION

During the term of this Agreement, Contractor shall not discriminate against any employee or applicant for an employment position to be used in the performance of services by Contractor hereunder, on the basis of ethnicity, race, age, religion, creed, color, national origin, ancestry, sex, gender, sexual orientation, physical or mental disability, medical condition, or citizenship status.

§ 8.5.13 SEVERABILITY

In case any one or more of the provisions contained in this Agreement or any application thereof shall be invalid, illegal or unenforceable in any respect, the validity, legality, and enforceability of the remaining provisions contained herein and any other application thereof shall not in any way be affected or impaired thereby.

§ 8.5.14 NOTICES

Any and all notices provided for hereunder shall be in writing and shall be deemed delivered, given and received when (i) personally delivered, or (ii) five (5) days after the same are deposited in the United States Postal Service mail, postage prepaid, certified mail, return receipt requested, addressed to the applicable party at the address indicated below for each party, or at such other address as may be designated by either party in a written notice to the other party:

AIA Document A101™ – 2007. Copyright © 1915, 1918, 1925, 1937, 1951, 1958, 1961, 1963, 1967, 1974, 1977, 1987, 1991, 1997 and 2007 by The American Institute of Architects. **All rights reserved.** WARNING: This AIA® Document is protected by U.S. Copyright Law and International Treaties. Unauthorized reproduction or distribution of this AIA® Document, or any portion of it, may result in severe civil and criminal penalties, and will be prosecuted to the maximum extent possible under the law. This document was produced by AIA software at 10:55:09 on 02/12/2015 under Order No.2014561723_1 which expires on 02/09/2016, and is not for resale.
User Notes: (1680562809)

OWNER: City of Santa Fe
Public Works Department, Facilities Division
PO Box 909
Santa Fe, NM 87504-0909

CONTRACTOR:

§ 8.5.15 NEW MEXICO TORT CLAIMS ACT

Any liability incurred by the City of Santa Fe in connection with this agreement is subject to the immunities and limitations of the New Mexico Tort Claims Act, Section 41-4-1, et. seq. NMSA 1978, as amended. The City and its "public employees" as defined in the New Mexico Tort Claims Act, do not waive any limitation of liability pursuant to law. No provision in this Agreement modifies or waives any provision of the New Mexico Tort Claims Act.

§ 8.5.16 TERM AND EFFECTIVE DATE

This Agreement shall be effective when signed by the City and the Contractor, whichever occurs last, and terminate on June 30, 2019, unless sooner pursuant to section 8.5.11, infra.

ARTICLE 9 ENUMERATION OF CONTRACT DOCUMENTS

§ 9.1 The Contract Documents, except for Modifications issued after execution of this Agreement, are enumerated in the sections below.

and Contractor.

(Paragraph deleted)

§ 9.1.2 The General Conditions are AIA Document A201–2007, General Conditions of the Contract for Construction.

§ 9.1.3 The Supplementary and other Conditions of the Contract:

Document	Title	Date	Pages
Request for Bid '15/TBD/B	RFB/Project Manual	TBD	See Project Manual Index

§ 9.1.4 The Specifications:

The specifications are included in the construction documents and in the Request for Bid '15/TBD/B Project Manual

§ 9.1.5 The Drawings:

(Paragraph deleted)

Drawings issued by The Response Group with the Request for Bid '15/TBD/B

§ 9.1.6 The Addenda, if any:

AIA Document A101™ – 2007. Copyright © 1915, 1918, 1925, 1937, 1951, 1958, 1961, 1963, 1967, 1974, 1977, 1987, 1991, 1997 and 2007 by The American Institute of Architects. **All rights reserved.** WARNING: This AIA® Document is protected by U.S. Copyright Law and International Treaties. Unauthorized reproduction or distribution of this AIA® Document, or any portion of it, may result in severe civil and criminal penalties, and will be prosecuted to the maximum extent possible under the law. This document was produced by AIA software at 10:55:09 on 02/12/2015 under Order No.2014561723_1 which expires on 02/09/2016, and is not for resale.
User Notes: (1680562809)

Number	Date	Pages
None		

Portions of Addenda relating to bidding requirements are not part of the Contract Documents unless the bidding requirements are also enumerated in this Article 9.

(Paragraphs deleted)

ARTICLE 10 INSURANCE AND BONDS

The Contractor shall purchase and maintain insurance and provide bonds as set forth in Article 11 of AIA Document A201–2007.

(Paragraph deleted)

Type of insurance or bond	Limit of liability or bond amount ($0.00)
Performance Payment Bonds	100% of the Contract amount
Commercial General Liability	$1,000,000 per occurrence, $2,000,000 general aggregate
Automobile Liability	$500,000 combined single limit
Workers Compensation	$100,000 each accident, $100,000 disease, each employee
Workers	$500,000 disease, policy limit

(Paragraph deleted)

AIA Document A101™ – 2007. Copyright © 1915, 1918, 1925, 1937, 1951, 1958, 1961, 1963, 1967, 1974, 1977, 1987, 1991, 1997 and 2007 by The American Institute of Architects. **All rights reserved.** WARNING: This AIA® Document is protected by U.S. Copyright Law and International Treaties. Unauthorized reproduction or distribution of this AIA® Document, or any portion of it, may result in severe civil and criminal penalties, and will be prosecuted to the maximum extent possible under the law. This document was produced by AIA software at 10:55:09 on 02/12/2015 under Order No.2014561723_1 which expires on 02/09/2016, and is not for resale.
User Notes:

IN WITNESS WHEREOF, the parties have executed this Agreement on the date set forth below.

CITY OF SANTA FE:

JAVIER M. GONZALES, MAYOR

DATE: _____

ATTEST:

YOLANDA Y. VIGIL
CITY CLERK

APPROVED AS TO FORM:

1/13/15

KELLEY A. BRENNAN,
CITY ATTORNEY

CONTRACTOR:
(legal name of contractor)

BY:

NM LICENSE #:
CRS #:
CITY BUSINESS REGISTRATION #:

APROVED:

OSCAR RODRIGUEZ, FINANCE DIRECTOR

52722.572500.0114900
Business Unit/Line Item

AIA Document A101™ – 2007. Copyright © 1915, 1918, 1925, 1937, 1951, 1958, 1961, 1963, 1967, 1974, 1977, 1987, 1991, 1997 and 2007 by The American Institute of Architects. **All rights reserved. WARNING: This AIA® Document is protected by U.S. Copyright Law and International Treaties. Unauthorized reproduction or distribution of this AIA® Document, or any portion of it, may result in severe civil and criminal penalties, and will be prosecuted to the maximum extent possible under the law.** This document was produced by AIA software at 14:25:47 on 01/12/2015 under Order No.4615060087_1 which expires on 02/08/2015, and is not for resale.
User Notes: (2018460248)

AIA® Document A201™ – 2007

General Conditions of the Contract for Construction

FOR REQUEST FOR BID (RFB) PURPOSES ONLY

for the following PROJECT:
(Name and location or address)
CIP #507N – Genoveva Chavez Community Center (GCCC) Natatorium Dehumidification System Remodeling

THE OWNER:
(Name, legal status and address)
City of Santa Fe
200 Lincoln Avenue
Santa Fe, New Mexico 87501
(505) 955-5937

THE ENGINEER:
(Name, legal status and address)
The Response Group, Inc.
11930 Menaul Blvd. NE, Ste. 214
Albuquerque, NM 87112
(505) 323-7629

ADDITIONS AND DELETIONS:
The author of this document has added information needed for its completion. The author may also have revised the text of the original AIA standard form. An *Additions and Deletions Report* that notes added information as well as revisions to the standard form text is available from the author and should be reviewed. A vertical line in the left margin of this document indicates where the author has added necessary information and where the author has added to or deleted from the original AIA text.

This document has important legal consequences. Consultation with an attorney is encouraged with respect to its completion or modification.

TABLE OF ARTICLES

1 GENERAL PROVISIONS

2 OWNER

3 CONTRACTOR

4 ENGINEER

5 SUBCONTRACTORS

6 CONSTRUCTION BY OWNER OR BY SEPARATE CONTRACTORS

7 CHANGES IN THE WORK

8 TIME

9 PAYMENTS AND COMPLETION

10 PROTECTION OF PERSONS AND PROPERTY

11 INSURANCE AND BONDS

12 UNCOVERING AND CORRECTION OF WORK

13 MISCELLANEOUS PROVISIONS

AIA Document A201™ – 2007. Copyright © 1911, 1915, 1918, 1925, 1937, 1951, 1958, 1961, 1963, 1966, 1970, 1976, 1987, 1997 and 2007 by The American Institute of Architects. **All rights reserved.** WARNING: This AIA® Document is protected by U.S. Copyright Law and International Treaties. Unauthorized reproduction or distribution of this AIA® Document, or any portion of it, may result in severe civil and criminal penalties, and will be prosecuted to the maximum extent possible under the law. This document was produced by AIA software at 13:50:02 on 02/19/2015 under Order No.2014561723_1 which expires on 02/09/2016, and is not for resale.
User Notes:

14 TERMINATION OR SUSPENSION OF THE CONTRACT

15 CLAIMS AND DISPUTES

AIA Document A201™ – 2007. Copyright © 1911, 1915, 1918, 1925, 1937, 1951, 1958, 1961, 1963, 1966, 1970, 1976, 1987, 1997 and 2007 by The American Institute of Architects. **All rights reserved.** WARNING: This AIA® Document is protected by U.S. Copyright Law and International Treaties. Unauthorized reproduction or distribution of this AIA® Document, or any portion of it, may result in severe civil and criminal penalties, and will be prosecuted to the maximum extent possible under the law. This document was produced by AIA software at 13:50:02 on 02/19/2015 under Order No.2014561723_1 which expires on 02/09/2016, and is not for resale.
User Notes:

(1415799623)

INDEX

(Topics and numbers in bold are section headings.)

Acceptance of Nonconforming Work
9.6.6, 9.9.3, **12.3**
Acceptance of Work
9.6.6, 9.8.2, 9.9.3, 9.10.1, 9.10.3, 12.3
Access to Work
3.16, 6.2.1, 12.1
Accident Prevention
10
Acts and Omissions
3.2, 3.3.2, 3.12.8, 3.18, 4.2.3, 8.3.1, 9.5.1, 10.2.5, 10.2.8, 13.4.2, 13.7, 14.1, 15.2
Addenda
1.1.1, 3.11
Additional Costs, Claims for
3.7.4, 3.7.5, 6.1.1, 7.3.7.5, 10.3, 15.1.4
Additional Inspections and Testing
9.4.2, 9.8.3, 12.2.1, **13.5**
Additional Insured
11.1.4
Additional Time, Claims for
3.2.4, 3.7.4, 3.7.5, 3.10.2, 8.3.2, **15.1.5**
Administration of the Contract
3.1.3, **4.2**, 9.4, 9.5
Advertisement or Invitation to Bid
1.1.1
Aesthetic Effect
4.2.13
Allowances
3.8, 7.3.8
All-risk Insurance
11.3.1, 11.3.1.1
Applications for Payment
4.2.5, 7.3.9, 9.2, **9.3**, 9.4, 9.5.1, 9.6.3, 9.7, 9.10, 11.1.3
Approvals
2.1.1, 2.2.2, 2.4, 3.1.3, 3.10.2, 3.12.8, 3.12.9, 3.12.10, 4.2.7, 9.3.2, 13.5.1
Arbitration
8.3.1, 11.3.10, 13.1, 15.3.2, **15.4**
ENGINEER
4
Engineer, Definition of
4.1.1
Engineer, Extent of Authority
2.4, 3.12.7, 4.1, 4.2, 5.2, 6.3, 7.1.2, 7.3.7, 7.4, 9.2, 9.3.1, 9.4, 9.5, 9.6.3, 9.8, 9.10.1, 9.10.3, 12.1, 12.2.1, 13.5.1, 13.5.2, 14.2.2, 14.2.4, 15.1.3, 15.2.1
Engineer, Limitations of Authority and Responsibility
2.1.1, 3.12.4, 3.12.8, 3.12.10, 4.1.2, 4.2.1, 4.2.2, 4.2.3, 4.2.6, 4.2.7, 4.2.10, 4.2.12, 4.2.13, 5.2.1, 7.4, 9.4.2, 9.5.3, 9.6.4, 15.1.3, 15.2
Engineer's Additional Services and Expenses
2.4, 11.3.1.1, 12.2.1, 13.5.2, 13.5.3, 14.2.4
Engineer's Administration of the Contract
3.1.3, 4.2, 3.7.4, 15.2, 9.4.1, 9.5
Engineer's Approvals
2.4, 3.1.3, 3.5, 3.10.2, 4.2.7
Engineer's Authority to Reject Work
3.5, 4.2.6, 12.1.2, 12.2.1
Engineer's Copyright
1.1.7, 1.5
Engineer's Decisions
3.7.4, 4.2.6, 4.2.7, 4.2.11, 4.2.12, 4.2.13, 4.2.14, 6.3, 7.3.7, 7.3.9, 8.1.3, 8.3.1, 9.2, 9.4.1, 9.5, 9.8.4, 9.9.1, 13.5.2, 15.2, 15.3
Engineer's Inspections
3.7.4, 4.2.2, 4.2.9, 9.4.2, 9.8.3, 9.9.2, 9.10.1, 13.5
Engineer's Instructions
3.2.4, 3.3.1, 4.2.6, 4.2.7, 13.5.2
Engineer's Interpretations
4.2.11, 4.2.12
Engineer's Project Representative
4.2.10
Engineer's Relationship with Contractor
1.1.2, 1.5, 3.1.3, 3.2.2, 3.2.3, 3.2.4, 3.3.1, 3.4.2, 3.5, 3.7.4, 3.7.5, 3.9.2, 3.9.3, 3.10, 3.11, 3.12, 3.16, 3.18, 4.1.2, 4.1.3, 4.2, 5.2, 6.2.2, 7, 8.3.1, 9.2, 9.3, 9.4, 9.5, 9.7, 9.8, 9.9, 10.2.6, 10.3, 11.3.7, 12, 13.4.2, 13.5, 15.2
Engineer's Relationship with Subcontractors
1.1.2, 4.2.3, 4.2.4, 4.2.6, 9.6.3, 9.6.4, 11.3.7
Engineer's Representations
9.4.2, 9.5.1, 9.10.1
Engineer's Site Visits
3.7.4, 4.2.2, 4.2.9, 9.4.2, 9.5.1, 9.9.2, 9.10.1, 13.5
Asbestos
10.3.1
Attorneys' Fees
3.18.1, 9.10.2, 10.3.3
Award of Separate Contracts
6.1.1, 6.1.2
Award of Subcontracts and Other Contracts for Portions of the Work
5.2
Basic Definitions
1.1
Bidding Requirements
1.1.1, 5.2.1, 11.4.1
Binding Dispute Resolution
9.7, 11.3.9, 11.3.10, 13.1, 15.2.5, 15.2.6.1, 15.3.1, 15.3.2, 15.4.1
Boiler and Machinery Insurance
11.3.2
Bonds, Lien
7.3.7.4, 9.10.2, 9.10.3
Bonds, Performance, and Payment
7.3.7.4, 9.6.7, 9.10.3, 11.3.9, **11.4**

AIA Document A201™ – 2007. Copyright © 1911, 1915, 1918, 1925, 1937, 1951, 1958, 1961, 1963, 1966, 1970, 1976, 1987, 1997 and 2007 by The American Institute of Architects. **All rights reserved.** WARNING: This AIA® Document is protected by U.S. Copyright Law and International Treaties. Unauthorized reproduction or distribution of this AIA® Document, or any portion of it, may result in severe civil and criminal penalties, and will be prosecuted to the maximum extent possible under the law. This document was produced by AIA software at 13:50:02 on 02/19/2015 under Order No.2014561723_1 which expires on 02/09/2016, and is not for resale.
User Notes:

Building Permit
3.7.1
Capitalization
1.3
Certificate of Substantial Completion
9.8.3, 9.8.4, 9.8.5
Certificates for Payment
4.2.1, 4.2.5, 4.2.9, 9.3.3, **9.4**, 9.5, 9.6.1, 9.6.6, 9.7, 9.10.1, 9.10.3, 14.1.1.3, 14.2.4, 15.1.3
Certificates of Inspection, Testing or Approval
13.5.4
Certificates of Insurance
9.10.2, 11.1.3
Change Orders
1.1.1, 2.4, 3.4.2, 3.7.4, 3.8.2.3, 3.11, 3.12.8, 4.2.8, 5.2.3, 7.1.2, 7.1.3, **7.2**, 7.3.2, 7.3.6, 7.3.9, 7.3.10, 8.3.1, 9.3.1.1, 9.10.3, 10.3.2, 11.3.1.2, 11.3.4, 11.3.9, 12.1.2, 15.1.3
Change Orders, Definition of
7.2.1
CHANGES IN THE WORK
2.2.1, 3.11, 4.2.8, **7**, 7.2.1, 7.3.1, 7.4, 8.3.1, 9.3.1.1, 11.3.9
Claims, Definition of
15.1.1
CLAIMS AND DISPUTES
3.2.4, 6.1.1, 6.3, 7.3.9, 9.3.3, 9.10.4, 10.3.3, **15**, 15.4
Claims and Timely Assertion of Claims
15.4.1
Claims for Additional Cost
3.2.4, 3.7.4, 6.1.1, 7.3.9, 10.3.2, **15.1.4**
Claims for Additional Time
3.2.4, 3.7.4, 6.1.1, 8.3.2, 10.3.2, **15.1.5**
Concealed or Unknown Conditions, Claims for
3.7.4
Claims for Damages
3.2.4, 3.18, 6.1.1, 8.3.3, 9.5.1, 9.6.7, 10.3.3, 11.1.1, 11.3.5, 11.3.7, 14.1.3, 14.2.4, 15.1.6
Claims Subject to Arbitration
15.3.1, 15.4.1
Cleaning Up
3.15, 6.3
Commencement of the Work, Conditions Relating to
2.2.1, 3.2.2, 3.4.1, 3.7.1, 3.10.1, 3.12.6, 5.2.1, 5.2.3, 6.2.2, 8.1.2, 8.2.2, 8.3.1, 11.1, 11.3.1, 11.3.6, 11.4.1, 15.1.4
Commencement of the Work, Definition of
8.1.2
Communications Facilitating Contract Administration
3.9.1, **4.2.4**
Completion, Conditions Relating to
3.4.1, 3.11, 3.15, 4.2.2, 4.2.9, 8.2, 9.4.2, 9.8, 9.9.1, 9.10, 12.2, 13.7, 14.1.2
COMPLETION, PAYMENTS AND
9
Completion, Substantial
4.2.9, 8.1.1, 8.1.3, 8.2.3, 9.4.2, 9.8, 9.9.1, 9.10.3, 12.2, 13.7
Compliance with Laws
1.6, 3.2.3, 3.6, 3.7, 3.12.10, 3.13, 4.1.1, 9.6.4, 10.2.2, 11.1, 11.3, 13.1, 13.4, 13.5.1, 13.5.2, 13.6, 14.1.1, 14.2.1.3, 15.2.8, 15.4.2, 15.4.3
Concealed or Unknown Conditions
3.7.4, 4.2.8, 8.3.1, 10.3
Conditions of the Contract
1.1.1, 6.1.1, 6.1.4
Consent, Written
3.4.2, 3.7.4, 3.12.8, 3.14.2, 4.1.2, 9.3.2, 9.8.5, 9.9.1, 9.10.2, 9.10.3, 11.3.1, 13.2, 13.4.2, 15.4.4.2
Consolidation or Joinder
15.4.4
CONSTRUCTION BY OWNER OR BY SEPARATE CONTRACTORS
1.1.4, **6**
Construction Change Directive, Definition of
7.3.1
Construction Change Directives
1.1.1, 3.4.2, 3.12.8, 4.2.8, 7.1.1, 7.1.2, 7.1.3, **7.3**, 9.3.1.1
Construction Schedules, Contractor's
3.10, 3.12.1, 3.12.2, 6.1.3, 15.1.5.2
Contingent Assignment of Subcontracts
5.4, 14.2.2.2
Continuing Contract Performance
15.1.3
Contract, Definition of
1.1.2
CONTRACT, TERMINATION OR SUSPENSION OF THE
5.4.1.1, 11.3.9, **14**
Contract Administration
3.1.3, 4, 9.4, 9.5
Contract Award and Execution, Conditions Relating to
3.7.1, 3.10, 5.2, 6.1, 11.1.3, 11.3.6, 11.4.1
Contract Documents, Copies Furnished and Use of
1.5.2, 2.2.5, 5.3
Contract Documents, Definition of
1.1.1
Contract Sum
3.7.4, 3.8, 5.2.3, 7.2, 7.3, 7.4, **9.1**, 9.4.2, 9.5.1.4, 9.6.7, 9.7, 10.3.2, 11.3.1, 14.2.4, 14.3.2, 15.1.4, 15.2.5
Contract Sum, Definition of
9.1
Contract Time
3.7.4, 3.7.5, 3.10.2, 5.2.3, 7.2.1.3, 7.3.1, 7.3.5, 7.4, 8.1.1, 8.2.1, 8.3.1, 9.5.1, 9.7, 10.3.2, 12.1.1, 14.3.2, 15.1.5.1, 15.2.5
Contract Time, Definition of
8.1.1

AIA Document A201™ – 2007. Copyright © 1911, 1915, 1918, 1925, 1937, 1951, 1958, 1961, 1963, 1966, 1970, 1976, 1987, 1997 and 2007 by The American Institute of Architects. **All rights reserved.** WARNING: This AIA® Document is protected by U.S. Copyright Law and International Treaties. Unauthorized reproduction or distribution of this AIA® Document, or any portion of it, may result in severe civil and criminal penalties, and will be prosecuted to the maximum extent possible under the law. This document was produced by AIA software at 13:50:02 on 02/19/2015 under Order No.2014561723_1 which expires on 02/09/2016, and is not for resale.
User Notes:

CONTRACTOR
3
Contractor, Definition of
3.1, 6.1.2
Contractor's Construction Schedules
3.10, 3.12.1, 3.12.2, 6.1.3, 15.1.5.2
Contractor's Employees
3.3.2, 3.4.3, 3.8.1, 3.9, 3.18.2, 4.2.3, 4.2.6, 10.2, 10.3, 11.1.1, 11.3.7, 14.1, 14.2.1.1
Contractor's Liability Insurance
11.1
Contractor's Relationship with Separate Contractors and Owner's Forces
3.12.5, 3.14.2, 4.2.4, 6, 11.3.7, 12.1.2, 12.2.4
Contractor's Relationship with Subcontractors
1.2.2, 3.3.2, 3.18.1, 3.18.2, 5, 9.6.2, 9.6.7, 9.10.2, 11.3.1.2, 11.3.7, 11.3.8
Contractor's Relationship with the Engineer
1.1.2, 1.5, 3.1.3, 3.2.2, 3.2.3, 3.2.4, 3.3.1, 3.4.2, 3.5, 3.7.4, 3.10, 3.11, 3.12, 3.16, 3.18, 4.1.3, 4.2, 5.2, 6.2.2, 7, 8.3.1, 9.2, 9.3, 9.4, 9.5, 9.7, 9.8, 9.9, 10.2.6, 10.3, 11.3.7, 12, 13.5, 15.1.2, 15.2.1
Contractor's Representations
3.2.1, 3.2.2, 3.5, 3.12.6, 6.2.2, 8.2.1, 9.3.3, 9.8.2
Contractor's Responsibility for Those Performing the Work
3.3.2, 3.18, 5.3, 6.1.3, 6.2, 9.5.1, 10.2.8
Contractor's Review of Contract Documents
3.2
Contractor's Right to Stop the Work
9.7
Contractor's Right to Terminate the Contract
14.1, 15.1.6
Contractor's Submittals
3.10, 3.11, 3.12.4, 4.2.7, 5.2.1, 5.2.3, 9.2, 9.3, 9.8.2, 9.8.3, 9.9.1, 9.10.2, 9.10.3, 11.1.3, 11.4.2
Contractor's Superintendent
3.9, 10.2.6
Contractor's Supervision and Construction Procedures
1.2.2, 3.3, 3.4, 3.12.10, 4.2.2, 4.2.7, 6.1.3, 6.2.4, 7.1.3, 7.3.5, 7.3.7, 8.2, 10, 12, 14, 15.1.3
Contractual Liability Insurance
11.1.1.8, 11.2
Coordination and Correlation
1.2, 3.2.1, 3.3.1, 3.10, 3.12.6, 6.1.3, 6.2.1
Copies Furnished of Drawings and Specifications
1.5, 2.2.5, 3.11
Copyrights
1.5, **3.17**
Correction of Work
2.3, 2.4, 3.7.3, 9.4.2, 9.8.2, 9.8.3, 9.9.1, 12.1.2, **12.2**
Correlation and Intent of the Contract Documents
1.2
Cost, Definition of
7.3.7
Costs
2.4, 3.2.4, 3.7.3, 3.8.2, 3.15.2, 5.4.2, 6.1.1, 6.2.3, 7.3.3.3, 7.3.7, 7.3.8, 7.3.9, 9.10.2, 10.3.2, 10.3.6, 11.3, 12.1.2, 12.2.1, 12.2.4, 13.5, 14
Cutting and Patching
3.14, 6.2.5
Damage to Construction of Owner or Separate Contractors
3.14.2, 6.2.4, 10.2.1.2, 10.2.5, 10.4, 11.1.1, 11.3, 12.2.4
Damage to the Work
3.14.2, 9.9.1, 10.2.1.2, 10.2.5, 10.4, 11.3.1, 12.2.4
Damages, Claims for
3.2.4, 3.18, 6.1.1, 8.3.3, 9.5.1, 9.6.7, 10.3.3, 11.1.1, 11.3.5, 11.3.7, 14.1.3, 14.2.4, 15.1.6
Damages for Delay
6.1.1, 8.3.3, 9.5.1.6, 9.7, 10.3.2
Date of Commencement of the Work, Definition of
8.1.2
Date of Substantial Completion, Definition of
8.1.3
Day, Definition of
8.1.4
Decisions of the Engineer
3.7.4, 4.2.6, 4.2.7, 4.2.11, 4.2.12, 4.2.13, 15.2, 6.3, 7.3.7, 7.3.9, 8.1.3, 8.3.1, 9.2, 9.4, 9.5.1, 9.8.4, 9.9.1, 13.5.2, 14.2.2, 14.2.4, 15.1, 15.2
Decisions to Withhold Certification
9.4.1, **9.5**, 9.7, 14.1.1.3
Defective or Nonconforming Work, Acceptance, Rejection and Correction of
2.3, 2.4, 3.5, 4.2.6, 6.2.5, 9.5.1, 9.5.2, 9.6.6, 9.8.2, 9.9.3, 9.10.4, 12.2.1
Definitions
1.1, 2.1.1, 3.1.1, 3.5, 3.12.1, 3.12.2, 3.12.3, 4.1.1, 15.1.1, 5.1, 6.1.2, 7.2.1, 7.3.1, 8.1, 9.1, 9.8.1
Delays and Extensions of Time
3.2, 3.7.4, 5.2.3, 7.2.1, 7.3.1, 7.4, **8.3**, 9.5.1, 9.7, 10.3.2, 10.4, 14.3.2, 15.1.5, 15.2.5
Disputes
6.3, 7.3.9, 15.1, 15.2
Documents and Samples at the Site
3.11
Drawings, Definition of
1.1.5
Drawings and Specifications, Use and Ownership of
3.11
Effective Date of Insurance
8.2.2, 11.1.2
Emergencies
10.4, 14.1.1.2, 15.1.4
Employees, Contractor's
3.3.2, 3.4.3, 3.8.1, 3.9, 3.18.2, 4.2.3, 4.2.6, 10.2, 10.3.3, 11.1.1, 11.3.7, 14.1, 14.2.1.1

AIA Document A201™ – 2007. Copyright © 1911, 1915, 1918, 1925, 1937, 1951, 1958, 1961, 1963, 1966, 1970, 1976, 1987, 1997 and 2007 by The American Institute of Architects. **All rights reserved.** WARNING: This AIA® Document is protected by U.S. Copyright Law and International Treaties. Unauthorized reproduction or distribution of this AIA® Document, or any portion of it, may result in severe civil and criminal penalties, and will be prosecuted to the maximum extent possible under the law. This document was produced by AIA software at 13:50:02 on 02/19/2015 under Order No.2014561723_1 which expires on 02/09/2016, and is not for resale.
User Notes:

Equipment, Labor, Materials or
1.1.3, 1.1.6, 3.4, 3.5, 3.8.2, 3.8.3, 3.12, 3.13, 3.15.1, 4.2.6, 4.2.7, 5.2.1, 6.2.1, 7.3.7, 9.3.2, 9.3.3, 9.5.1.3, 9.10.2, 10.2.1, 10.2.4, 14.2.1.1, 14.2.1.2
Execution and Progress of the Work
1.1.3, 1.2.1, 1.2.2, 2.2.3, 2.2.5, 3.1, 3.3.1, 3.4.1, 3.5, 3.7.1, 3.10.1, 3.12, 3.14, 4.2, 6.2.2, 7.1.3, 7.3.5, 8.2, 9.5.1, 9.9.1, 10.2, 10.3, 12.2, 14.2, 14.3.1, 15.1.3
Extensions of Time
3.2.4, 3.7.4, 5.2.3, 7.2.1, 7.3, 7.4, 9.5.1, 9.7, 10.3.2, 10.4, 14.3, 15.1.5, 15.2.5
Failure of Payment
9.5.1.3, **9.7**, 9.10.2, 13.6, 14.1.1.3, 14.2.1.2
Faulty Work
(See Defective or Nonconforming Work)
Final Completion and Final Payment
4.2.1, 4.2.9, 9.8.2, **9.10**, 11.1.2, 11.1.3, 11.3.1, 11.3.5, 12.3, 14.2.4, 14.4.3
Financial Arrangements, Owner's
2.2.1, 13.2.2, 14.1.1.4
Fire and Extended Coverage Insurance
11.3.1.1
GENERAL PROVISIONS
1
Governing Law
13.1
Guarantees (See Warranty)
Hazardous Materials
10.2.4, **10.3**
Identification of Subcontractors and Suppliers
5.2.1
Indemnification
3.17, **3.18**, 9.10.2, 10.3.3, 10.3.5, 10.3.6, 11.3.1.2, 11.3.7
Information and Services Required of the Owner
2.1.2, **2.2**, 3.2.2, 3.12.4, 3.12.10, 6.1.3, 6.1.4, 6.2.5, 9.6.1, 9.6.4, 9.9.2, 9.10.3, 10.3.3, 11.2, 11.4, 13.5.1, 13.5.2, 14.1.1.4, 14.1.4, 15.1.3
Initial Decision
15.2
Initial Decision Maker, Definition of
1.1.8
Initial Decision Maker, Decisions
14.2.2, 14.2.4, 15.2.1, 15.2.2, 15.2.3, 15.2.4, 15.2.5
Initial Decision Maker, Extent of Authority
14.2.2, 14.2.4, 15.1.3, 15.2.1, 15.2.2, 15.2.3, 15.2.4, 15.2.5
Injury or Damage to Person or Property
10.2.8, 10.4
Inspections
3.1.3, 3.3.3, 3.7.1, 4.2.2, 4.2.6, 4.2.9, 9.4.2, 9.8.3, 9.9.2, 9.10.1, 12.2.1, 13.5
Instructions to Bidders
1.1.1
Instructions to the Contractor
3.2.4, 3.3.1, 3.8.1, 5.2.1, 7, 8.2.2, 12, 13.5.2
Instruments of Service, Definition of
1.1.7
Insurance
3.18.1, 6.1.1, 7.3.7, 9.3.2, 9.8.4, 9.9.1, 9.10.2, **11**
Insurance, Boiler and Machinery
11.3.2
Insurance, Contractor's Liability
11.1
Insurance, Effective Date of
8.2.2, 11.1.2
Insurance, Loss of Use
11.3.3
Insurance, Owner's Liability
11.2
Insurance, Property
10.2.5, **11.3**
Insurance, Stored Materials
9.3.2
INSURANCE AND BONDS
11
Insurance Companies, Consent to Partial Occupancy
9.9.1
Intent of the Contract Documents
1.2.1, 4.2.7, 4.2.12, 4.2.13, 7.4
Interest
13.6
Interpretation
1.2.3, **1.4**, 4.1.1, 5.1, 6.1.2, 15.1.1
Interpretations, Written
4.2.11, 4.2.12, 15.1.4
Judgment on Final Award
15.4.2
Labor and Materials, Equipment
1.1.3, 1.1.6, **3.4**, 3.5, 3.8.2, 3.8.3, 3.12, 3.13, 3.15.1, 4.2.6, 4.2.7, 5.2.1, 6.2.1, 7.3.7, 9.3.2, 9.3.3, 9.5.1.3, 9.10.2, 10.2.1, 10.2.4, 14.2.1.1, 14.2.1.2
Labor Disputes
8.3.1
Laws and Regulations
1.5, 3.2.3, 3.6, 3.7, 3.12.10, 3.13, 4.1.1, 9.6.4, 9.9.1, 10.2.2, 11.1.1, 11.3, 13.1, 13.4, 13.5.1, 13.5.2, 13.6, 14, 15.2.8, 15.4
Liens
2.1.2, 9.3.3, 9.10.2, 9.10.4, 15.2.8
Limitations, Statutes of
12.2.5, 13.7, 15.4.1.1
Limitations of Liability
2.3, 3.2.2, 3.5, 3.12.10, 3.17, 3.18.1, 4.2.6, 4.2.7, 4.2.12, 6.2.2, 9.4.2, 9.6.4, 9.6.7, 10.2.5, 10.3.3, 11.1.2, 11.2, 11.3.7, 12.2.5, 13.4.2
Limitations of Time
2.1.2, 2.2, 2.4, 3.2.2, 3.10, 3.11, 3.12.5, 3.15.1, 4.2.7, 5.2, 5.3, 5.4.1, 6.2.4, 7.3, 7.4, 8.2, 9.2, 9.3.1, 9.3.3, 9.4.1, 9.5, 9.6, 9.7, 9.8, 9.9, 9.10, 11.1.3, 11.3.1.5, 11.3.6, 11.3.10, 12.2, 13.5, 13.7, 14, 15
Loss of Use Insurance
11.3.3

AIA Document A201™ – 2007. Copyright © 1911, 1915, 1918, 1925, 1937, 1951, 1958, 1961, 1963, 1966, 1970, 1976, 1987, 1997 and 2007 by The American Institute of Architects. **All rights reserved.** WARNING: This AIA® Document is protected by U.S. Copyright Law and International Treaties. Unauthorized reproduction or distribution of this AIA® Document, or any portion of it, may result in severe civil and criminal penalties, and will be prosecuted to the maximum extent possible under the law. This document was produced by AIA software at 13:50:02 on 02/19/2015 under Order No.2014561723_1 which expires on 02/09/2016, and is not for resale.
User Notes:

Material Suppliers
1.5, 3.12.1, 4.2.4, 4.2.6, 5.2.1, 9.3, 9.4.2, 9.6, 9.10.5
Materials, Hazardous
10.2.4, **10.3**
Materials, Labor, Equipment and
1.1.3, 1.1.6, 1.5.1, 3.4.1, 3.5, 3.8.2, 3.8.3, 3.12, 3.13, 3.15.1, 4.2.6, 4.2.7, 5.2.1, 6.2.1, 7.3.7, 9.3.2, 9.3.3, 9.5.1.3, 9.10.2, 10.2.1.2, 10.2.4, 14.2.1.1, 14.2.1.2
Means, Methods, Techniques, Sequences and Procedures of Construction
3.3.1, 3.12.10, 4.2.2, 4.2.7, 9.4.2
Mechanic's Lien
2.1.2, 15.2.8
Mediation
8.3.1, 10.3.5, 10.3.6, 15.2.1, 15.2.5, 15.2.6, **15.3**, 15.4.1
Minor Changes in the Work
1.1.1, 3.12.8, 4.2.8, 7.1, **7.4**
MISCELLANEOUS PROVISIONS
13
Modifications, Definition of
1.1.1
Modifications to the Contract
1.1.1, 1.1.2, 3.11, 4.1.2, 4.2.1, 5.2.3, 7, 8.3.1, 9.7, 10.3.2, 11.3.1
Mutual Responsibility
6.2
Nonconforming Work, Acceptance of
9.6.6, 9.9.3, **12.3**
Nonconforming Work, Rejection and Correction of
2.3, 2.4, 3.5, 4.2.6, 6.2.4, 9.5.1, 9.8.2, 9.9.3, 9.10.4, 12.2.1
Notice
2.2.1, 2.3, 2.4, 3.2.4, 3.3.1, 3.7.2, 3.12.9, 5.2.1, 9.7, 9.10, 10.2.2, 11.1.3, 12.2.2.1, 13.3, 13.5.1, 13.5.2, 14.1, 14.2, 15.2.8, 15.4.1
Notice, Written
2.3, 2.4, 3.3.1, 3.9.2, 3.12.9, 3.12.10, 5.2.1, 9.7, 9.10, 10.2.2, 10.3, 11.1.3, 11.3.6, 12.2.2.1, **13.3**, 14, 15.2.8, 15.4.1
Notice of Claims
3.7.4, 10.2.8, **15.1.2**, 15.4
Notice of Testing and Inspections
13.5.1, 13.5.2
Observations, Contractor's
3.2, 3.7.4
Occupancy
2.2.2, 9.6.6, 9.8, 11.3.1.5
Orders, Written
1.1.1, 2.3, 3.9.2, 7, 8.2.2, 11.3.9, 12.1, 12.2.2.1, 13.5.2, 14.3.1
OWNER
2
Owner, Definition of
2.1.1
Owner, Information and Services Required of the
2.1.2, **2.2**, 3.2.2, 3.12.10, 6.1.3, 6.1.4, 6.2.5, 9.3.2, 9.6.1, 9.6.4, 9.9.2, 9.10.3, 10.3.3, 11.2, 11.3, 13.5.1, 13.5.2, 14.1.1.4, 14.1.4, 15.1.3
Owner's Authority
1.5, 2.1.1, 2.3, 2.4, 3.4.2, 3.8.1, 3.12.10, 3.14.2, 4.1.2, 4.1.3, 4.2.4, 4.2.9, 5.2.1, 5.2.4, 5.4.1, 6.1, 6.3, 7.2.1, 7.3.1, 8.2.2, 8.3.1, 9.3.1, 9.3.2, 9.5.1, 9.6.4, 9.9.1, 9.10.2, 10.3.2, 11.1.3, 11.3.3, 11.3.10, 12.2.2, 12.3, 13.2.2, 14.3, 14.4, 15.2.7
Owner's Financial Capability
2.2.1, 13.2.2, 14.1.1.4
Owner's Liability Insurance
11.2
Owner's Relationship with Subcontractors
1.1.2, 5.2, 5.3, 5.4, 9.6.4, 9.10.2, 14.2.2
Owner's Right to Carry Out the Work
2.4, 14.2.2
Owner's Right to Clean Up
6.3
Owner's Right to Perform Construction and to Award Separate Contracts
6.1
Owner's Right to Stop the Work
2.3
Owner's Right to Suspend the Work
14.3
Owner's Right to Terminate the Contract
14.2
Ownership and Use of Drawings, Specifications and Other Instruments of Service
1.1.1, 1.1.6, 1.1.7, **1.5**, 2.2.5, 3.2.2, 3.11, 3.17, 4.2.12, 5.3
Partial Occupancy or Use
9.6.6, **9.9**, 11.3.1.5
Patching, Cutting and
3.14, 6.2.5
Patents
3.17
Payment, Applications for
4.2.5, 7.3.9, 9.2, **9.3**, 9.4, 9.5, 9.6.3, 9.7, 9.8.5, 9.10.1, 14.2.3, 14.2.4, 14.4.3
Payment, Certificates for
4.2.5, 4.2.9, 9.3.3, **9.4**, 9.5, 9.6.1, 9.6.6, 9.7, 9.10.1, 9.10.3, 13.7, 14.1.1.3, 14.2.4
Payment, Failure of
9.5.1.3, **9.7**, 9.10.2, 13.6, 14.1.1.3, 14.2.1.2
Payment, Final
4.2.1, 4.2.9, 9.8.2, 9.10, 11.1.2, 11.1.3, 11.4.1, 12.3, 13.7, 14.2.4, 14.4.3
Payment Bond, Performance Bond and
7.3.7.4, 9.6.7, 9.10.3, **11.4**
Payments, Progress
9.3, **9.6**, 9.8.5, 9.10.3, 13.6, 14.2.3, 15.1.3
PAYMENTS AND COMPLETION
9

AIA Document A201™ – 2007. Copyright © 1911, 1915, 1918, 1925, 1937, 1951, 1958, 1961, 1963, 1966, 1970, 1976, 1987, 1997 and 2007 by The American Institute of Architects. **All rights reserved.** WARNING: This AIA® Document is protected by U.S. Copyright Law and International Treaties. Unauthorized reproduction or distribution of this AIA® Document, or any portion of it, may result in severe civil and criminal penalties, and will be prosecuted to the maximum extent possible under the law. This document was produced by AIA software at 13:50:02 on 02/19/2015 under Order No.2014561723_1 which expires on 02/09/2016, and is not for resale.
User Notes:

Payments to Subcontractors
5.4.2, 9.5.1.3, 9.6.2, 9.6.3, 9.6.4, 9.6.7, 14.2.1.2
PCB
10.3.1
Performance Bond and Payment Bond
7.3.7.4, 9.6.7, 9.10.3, **11.4**
Permits, Fees, Notices and Compliance with Laws
2.2.2, **3.7**, 3.13, 7.3.7.4, 10.2.2
PERSONS AND PROPERTY, PROTECTION OF
10
Polychlorinated Biphenyl
10.3.1
Product Data, Definition of
3.12.2
Product Data and Samples, Shop Drawings
3.11, **3.12**, 4.2.7
Progress and Completion
4.2.2, **8.2**, 9.8, 9.9.1, 14.1.4, 15.1.3
Progress Payments
9.3, **9.6**, 9.8.5, 9.10.3, 13.6, 14.2.3, 15.1.3
Project, Definition of
1.1.4
Project Representatives
4.2.10
Property Insurance
10.2.5, **11.3**
PROTECTION OF PERSONS AND PROPERTY
10
Regulations and Laws
1.5, 3.2.3, 3.6, 3.7, 3.12.10, 3.13, 4.1.1, 9.6.4, 9.9.1, 10.2.2, 11.1, 11.4, 13.1, 13.4, 13.5.1, 13.5.2, 13.6, 14, 15.2.8, 15.4
Rejection of Work
3.5, 4.2.6, 12.2.1
Releases and Waivers of Liens
9.10.2
Representations
3.2.1, 3.5, 3.12.6, 6.2.2, 8.2.1, 9.3.3, 9.4.2, 9.5.1, 9.8.2, 9.10.1
Representatives
2.1.1, 3.1.1, 3.9, 4.1.1, 4.2.1, 4.2.2, 4.2.10, 5.1.1, 5.1.2, 13.2.1
Responsibility for Those Performing the Work
3.3.2, 3.18, 4.2.3, 5.3, 6.1.3, 6.2, 6.3, 9.5.1, 10
Retainage
9.3.1, 9.6.2, 9.8.5, 9.9.1, 9.10.2, 9.10.3
Review of Contract Documents and Field Conditions by Contractor
3.2, 3.12.7, 6.1.3
Review of Contractor's Submittals by Owner and Engineer
3.10.1, 3.10.2, 3.11, 3.12, 4.2, 5.2, 6.1.3, 9.2, 9.8.2
Review of Shop Drawings, Product Data and Samples by Contractor
3.12
Rights and Remedies
1.1.2, 2.3, 2.4, 3.5, 3.7.4, 3.15.2, 4.2.6, 5.3, 5.4, 6.1, 6.3, 7.3.1, 8.3, 9.5.1, 9.7, 10.2.5, 10.3, 12.2.2, 12.2.4, **13.4**, 14, 15.4
Royalties, Patents and Copyrights
3.17
Rules and Notices for Arbitration
15.4.1
Safety of Persons and Property
10.2, 10.4
Safety Precautions and Programs
3.3.1, 4.2.2, 4.2.7, 5.3, **10.1**, 10.2, 10.4
Samples, Definition of
3.12.3
Samples, Shop Drawings, Product Data and
3.11, **3.12**, 4.2.7
Samples at the Site, Documents and
3.11
Schedule of Values
9.2, 9.3.1
Schedules, Construction
3.10, 3.12.1, 3.12.2, 6.1.3, 15.1.5.2
Separate Contracts and Contractors
1.1.4, 3.12.5, 3.14.2, 4.2.4, 4.2.7, 6, 8.3.1, 12.1.2
Shop Drawings, Definition of
3.12.1
Shop Drawings, Product Data and Samples
3.11, **3.12**, 4.2.7
Site, Use of
3.13, 6.1.1, 6.2.1
Site Inspections
3.2.2, 3.3.3, 3.7.1, 3.7.4, 4.2, 9.4.2, 9.10.1, 13.5
Site Visits, Engineer's
3.7.4, 4.2.2, 4.2.9, 9.4.2, 9.5.1, 9.9.2, 9.10.1, 13.5
Special Inspections and Testing
4.2.6, 12.2.1, 13.5
Specifications, Definition of
1.1.6
Specifications
1.1.1, **1.1.6**, 1.2.2, 1.5, 3.11, 3.12.10, 3.17, 4.2.14
Statute of Limitations
13.7, 15.4.1.1
Stopping the Work
2.3, 9.7, 10.3, 14.1
Stored Materials
6.2.1, 9.3.2, 10.2.1.2, 10.2.4
Subcontractor, Definition of
5.1.1
SUBCONTRACTORS
5
Subcontractors, Work by
1.2.2, 3.3.2, 3.12.1, 4.2.3, 5.2.3, 5.3, 5.4, 9.3.1.2, 9.6.7
Subcontractual Relations
5.3, 5.4, 9.3.1.2, 9.6, 9.10, 10.2.1, 14.1, 14.2.1

AIA Document A201™ – 2007. Copyright © 1911, 1915, 1918, 1925, 1937, 1951, 1958, 1961, 1963, 1966, 1970, 1976, 1987, 1997 and 2007 by The American Institute of Architects. **All rights reserved.** WARNING: This AIA® Document is protected by U.S. Copyright Law and International Treaties. Unauthorized reproduction or distribution of this AIA® Document, or any portion of it, may result in severe civil and criminal penalties, and will be prosecuted to the maximum extent possible under the law. This document was produced by AIA software at 13:50:02 on 02/19/2015 under Order No.2014561723_1 which expires on 02/09/2016, and is not for resale.
User Notes:

Submittals
3.10, 3.11, 3.12, 4.2.7, 5.2.1, 5.2.3, 7.3.7, 9.2, 9.3, **9.8**, 9.9.1, 9.10.2, 9.10.3, 11.1.3
Submittal Schedule
3.10.2, 3.12.5, 4.2.7
Subrogation, Waivers of
6.1.1, **11.3.7**
Substantial Completion
4.2.9, 8.1.1, 8.1.3, 8.2.3, 9.4.2, **9.8**, 9.9.1, 9.10.3, 12.2, 13.7
Substantial Completion, Definition of
9.8.1
Substitution of Subcontractors
5.2.3, 5.2.4
Substitution of Engineer
4.1.3
Substitutions of Materials
3.4.2, 3.5, 7.3.8
Sub-subcontractor, Definition of
5.1.2
Subsurface Conditions
3.7.4
Successors and Assigns
13.2
Superintendent
3.9, 10.2.6
Supervision and Construction Procedures
1.2.2, **3.3**, 3.4, 3.12.10, 4.2.2, 4.2.7, 6.1.3, 6.2.4, 7.1.3, 7.3.7, 8.2, 8.3.1, 9.4.2, 10, 12, 14, 15.1.3
Surety
5.4.1.2, 9.8.5, 9.10.2, 9.10.3, 14.2.2, 15.2.7
Surety, Consent of
9.10.2, 9.10.3
Surveys
2.2.3
Suspension by the Owner for Convenience
14.3
Suspension of the Work
5.4.2, 14.3
Suspension or Termination of the Contract
5.4.1.1, 14
Taxes
3.6, 3.8.2.1, 7.3.7.4
Termination by the Contractor
14.1, 15.1.6
Termination by the Owner for Cause
5.4.1.1, **14.2**, 15.1.6
Termination by the Owner for Convenience
14.4
Termination of the Engineer
4.1.3
Termination of the Contractor
14.2.2
TERMINATION OR SUSPENSION OF THE CONTRACT
14
Tests and Inspections
3.1.3, 3.3.3, 4.2.2, 4.2.6, 4.2.9, 9.4.2, 9.8.3, 9.9.2, 9.10.1, 10.3.2, 11.4.1, 12.2.1, **13.5**
TIME
8
Time, Delays and Extensions of
3.2.4, 3.7.4, 5.2.3, 7.2.1, 7.3.1, 7.4, **8.3**, 9.5.1, 9.7, 10.3.2, 10.4, 14.3.2, 15.1.5, 15.2.5
Time Limits
2.1.2, 2.2, 2.4, 3.2.2, 3.10, 3.11, 3.12.5, 3.15.1, 4.2, 5.2, 5.3, 5.4, 6.2.4, 7.3, 7.4, 8.2, 9.2, 9.3.1, 9.3.3, 9.4.1, 9.5, 9.6, 9.7, 9.8, 9.9, 9.10, 11.1.3, 12.2, 13.5, 13.7, 14, 15.1.2, 15.4
Time Limits on Claims
3.7.4, 10.2.8, **13.7**, 15.1.2
Title to Work
9.3.2, 9.3.3
Transmission of Data in Digital Form
1.6
UNCOVERING AND CORRECTION OF WORK
12
Uncovering of Work
12.1
Unforeseen Conditions, Concealed or Unknown
3.7.4, 8.3.1, 10.3
Unit Prices
7.3.3.2, 7.3.4
Use of Documents
1.1.1, 1.5, 2.2.5, 3.12.6, 5.3
Use of Site
3.13, 6.1.1, 6.2.1
Values, Schedule of
9.2, 9.3.1
Waiver of Claims by the Engineer
13.4.2
Waiver of Claims by the Contractor
9.10.5, 13.4.2, 15.1.6
Waiver of Claims by the Owner
9.9.3, 9.10.3, 9.10.4, 12.2.2.1, 13.4.2, 14.2.4, 15.1.6
Waiver of Consequential Damages
14.2.4, 15.1.6
Waiver of Liens
9.10.2, 9.10.4
Waivers of Subrogation
6.1.1, **11.3.7**
Warranty
3.5, 4.2.9, 9.3.3, 9.8.4, 9.9.1, 9.10.4, 12.2.2, 13.7
Weather Delays
15.1.5.2
Work, Definition of
1.1.3
Written Consent
1.5.2, 3.4.2, 3.7.4, 3.12.8, 3.14.2, 4.1.2, 9.3.2, 9.8.5, 9.9.1, 9.10.2, 9.10.3, 11.4.1, 13.2, 13.4.2, 15.4.4.2
Written Interpretations
4.2.11, 4.2.12

AIA Document A201™ – 2007. Copyright © 1911, 1915, 1918, 1925, 1937, 1951, 1958, 1961, 1963, 1966, 1970, 1976, 1987, 1997 and 2007 by The American Institute of Architects. **All rights reserved.** WARNING: This AIA® Document is protected by U.S. Copyright Law and International Treaties. Unauthorized reproduction or distribution of this AIA® Document, or any portion of it, may result in severe civil and criminal penalties, and will be prosecuted to the maximum extent possible under the law. This document was produced by AIA software at 13:50:02 on 02/19/2015 under Order No.2014561723_1 which expires on 02/09/2016, and is not for resale.
User Notes:

Written Notice
2.3, 2.4, 3.3.1, 3.9, 3.12.9, 3.12.10, 5.2.1, 8.2.2, 9.7, 9.10, 10.2.2, 10.3, 11.1.3, 12.2.2, 12.2.4, **13.3**, 14, 15.4.1

Written Orders
1.1.1, 2.3, 3.9, 7, 8.2.2, 12.1, 12.2, 13.5.2, 14.3.1, 15.1.2

AIA Document A201™ – 2007. Copyright © 1911, 1915, 1918, 1925, 1937, 1951, 1958, 1961, 1963, 1966, 1970, 1976, 1987, 1997 and 2007 by The American Institute of Architects. **All rights reserved.** WARNING: This AIA® Document is protected by U.S. Copyright Law and International Treaties. Unauthorized reproduction or distribution of this AIA® Document, or any portion of it, may result in severe civil and criminal penalties, and will be prosecuted to the maximum extent possible under the law. This document was produced by AIA software at 13:50:02 on 02/19/2015 under Order No.2014561723_1 which expires on 02/09/2016, and is not for resale.
User Notes:

(1415799623)

ARTICLE 1 GENERAL PROVISIONS

§ 1.1 BASIC DEFINITIONS

§ 1.1.1 THE CONTRACT DOCUMENTS

The Contract Documents are enumerated in the Agreement between the Owner and Contractor (hereinafter the Agreement) and consist of the Agreement, Conditions of the Contract (General, Supplementary and other Conditions), Drawings, Specifications, Addenda issued prior to execution of the Contract, other documents listed in the Agreement and Modifications issued after execution of the Contract. A Modification is (1) a written amendment to the Contract signed by both parties, (2) a Change Order, (3) a Construction Change Directive or (4) a written order for a minor change in the Work issued by the Engineer. Unless specifically enumerated in the Agreement, the Contract Documents do not include the advertisement or invitation to bid, Instructions to Bidders, sample forms, other information furnished by the Owner in anticipation of receiving bids or proposals, the Contractor's bid or proposal, or portions of Addenda relating to bidding requirements.

§ 1.1.2 THE CONTRACT

The Contract Documents form the Contract for Construction. The Contract represents the entire and integrated agreement between the parties hereto and supersedes prior negotiations, representations or agreements, either written or oral. The Contract may be amended or modified only by a Modification. The Contract Documents shall not be construed to create a contractual relationship of any kind (1) between the Contractor and the Engineer or the Engineer's consultants, (2) between the Owner and a Subcontractor or a Sub-subcontractor, (3) between the Owner and the Engineer or the Engineer's consultants or (4) between any persons or entities other than the Owner and the Contractor. The Engineer shall, however, be entitled to performance and enforcement of obligations under the Contract intended to facilitate performance of the Engineer's duties.

§ 1.1.3 THE WORK

The term "Work" means the construction and services required by the Contract Documents, whether completed or partially completed, and includes all other labor, materials, equipment and services provided or to be provided by the Contractor to fulfill the Contractor's obligations. The Work may constitute the whole or a part of the Project.

§ 1.1.4 THE PROJECT

The Project is the total construction of which the Work performed under the Contract Documents may be the whole or a part and which may include construction by the Owner and by separate contractors.

§ 1.1.5 THE DRAWINGS

The Drawings are the graphic and pictorial portions of the Contract Documents showing the design, location and dimensions of the Work, generally including plans, elevations, sections, details, schedules and diagrams.

§ 1.1.6 THE SPECIFICATIONS

The Specifications are that portion of the Contract Documents consisting of the written requirements for materials, equipment, systems, standards and workmanship for the Work, and performance of related services.

§ 1.1.7 INSTRUMENTS OF SERVICE

Instruments of Service are representations, in any medium of expression now known or later developed, of the tangible and intangible creative work performed by the Engineer and the Engineer's consultants under their respective professional services agreements. Instruments of Service may include, without limitation, studies, surveys, models, sketches, drawings, specifications, and other similar materials.

§ 1.1.8 INITIAL DECISION MAKER

The Initial Decision Maker is the person identified in the Agreement to render initial decisions on Claims in accordance with Section 15.2 and certify termination of the Agreement under Section 14.2.2.

§ 1.2 CORRELATION AND INTENT OF THE CONTRACT DOCUMENTS

§ 1.2.1 The intent of the Contract Documents is to include all items necessary for the proper execution and completion of the Work by the Contractor. The Contract Documents are complementary, and what is required by one shall be as binding as if required by all; performance by the Contractor shall be required only to the extent consistent with the Contract Documents and reasonably inferable from them as being necessary to produce the indicated results.

AIA Document A201™ – 2007. Copyright © 1911, 1915, 1918, 1925, 1937, 1951, 1958, 1961, 1963, 1966, 1970, 1976, 1987, 1997 and 2007 by The American Institute of Architects. **All rights reserved.** WARNING: This AIA® Document is protected by U.S. Copyright Law and International Treaties. Unauthorized reproduction or distribution of this AIA® Document, or any portion of it, may result in severe civil and criminal penalties, and will be prosecuted to the maximum extent possible under the law. This document was produced by AIA software at 13:50:02 on 02/19/2015 under Order No.2014561723_1 which expires on 02/09/2016, and is not for resale.
User Notes:

§ 1.2.2 Organization of the Specifications into divisions, sections and articles, and arrangement of Drawings shall not control the Contractor in dividing the Work among Subcontractors or in establishing the extent of Work to be performed by any trade.

§ 1.2.3 Unless otherwise stated in the Contract Documents, words that have well-known technical or construction industry meanings are used in the Contract Documents in accordance with such recognized meanings.

§ 1.3 CAPITALIZATION

Terms capitalized in these General Conditions include those that are (1) specifically defined, (2) the titles of numbered articles or (3) the titles of other documents published by the American Institute of Engineers.

§ 1.4 INTERPRETATION

In the interest of brevity the Contract Documents frequently omit modifying words such as "all" and "any" and articles such as "the" and "an," but the fact that a modifier or an article is absent from one statement and appears in another is not intended to affect the interpretation of either statement.

§ 1.5 OWNERSHIP AND USE OF DRAWINGS, SPECIFICATIONS AND OTHER INSTRUMENTS OF SERVICE

§ 1.5.1 The Engineer and the Engineer's consultants shall be deemed the authors and owners of their respective Instruments of Service, including the Drawings and Specifications, and will retain all common law, statutory and other reserved rights, including copyrights, or rights as indicated in the agreement between Owner and Engineer. The Contractor, Subcontractors, Sub-subcontractors, and material or equipment suppliers shall not own or claim a copyright in the Instruments of Service. Submittal or distribution to meet official regulatory requirements or for other purposes in connection with this Project is not to be construed as publication in derogation of the Engineer's or Engineer's consultants' reserved rights.

§ 1.5.2 The Contractor, Subcontractors, Sub-subcontractors and material or equipment suppliers are authorized to use and reproduce the Instruments of Service provided to them solely and exclusively for execution of the Work. All copies made under this authorization shall bear the copyright notice, if any, shown on the Instruments of Service. The Contractor, Subcontractors, Sub-subcontractors, and material or equipment suppliers may not use the Instruments of Service on other projects or for additions to this Project outside the scope of the Work without the specific written consent of the Owner, Engineer and the Engineer's consultants.

§ 1.6 TRANSMISSION OF DATA IN DIGITAL FORM

If the parties intend to transmit Instruments of Service or any other information or documentation in digital form, they shall endeavor to establish necessary protocols governing such transmissions, unless otherwise already provided in the Agreement or the Contract Documents.

ARTICLE 2 OWNER

§ 2.1 GENERAL

§ 2.1.1 The Owner is the person or entity identified as such in the Agreement and is referred to throughout the Contract Documents as if singular in number. The Owner shall designate in writing a representative who shall have express authority to bind the Owner with respect to all matters requiring the Owner's approval or authorization. Except as otherwise provided in Section 4.2.1, the Engineer does not have such authority. The term "Owner" means the Owner or the Owner's authorized representative.

§ 2.1.2 The Owner shall furnish to the Contractor within fifteen days after receipt of a written request, information necessary and relevant for the Contractor to evaluate, give notice of or enforce mechanic's lien rights. Such information shall include a correct statement of the record legal title to the property on which the Project is located, usually referred to as the site, and the Owner's interest therein.

§ 2.2 INFORMATION AND SERVICES REQUIRED OF THE OWNER

§ 2.2.1 Prior to commencement of the Work, the Contractor may request in writing that the Owner provide reasonable evidence that the Owner has made financial arrangements to fulfill the Owner's obligations under the Contract. Thereafter, the Contractor may only request such evidence if (1) the Owner fails to make payments to the Contractor as the Contract Documents require; (2) a change in the Work materially changes the Contract Sum; or (3) the Contractor identifies in writing a reasonable concern regarding the Owner's ability to make payment when due. The Owner shall furnish such evidence as a condition precedent to commencement or continuation of the Work or

AIA Document A201™ – 2007. Copyright © 1911, 1915, 1918, 1925, 1937, 1951, 1958, 1961, 1963, 1966, 1970, 1976, 1987, 1997 and 2007 by The American Institute of Architects. **All rights reserved.** WARNING: This AIA® Document is protected by U.S. Copyright Law and International Treaties. Unauthorized reproduction or distribution of this AIA® Document, or any portion of it, may result in severe civil and criminal penalties, and will be prosecuted to the maximum extent possible under the law. This document was produced by AIA software at 13:50:02 on 02/19/2015 under Order No.2014561723_1 which expires on 02/09/2016, and is not for resale.
User Notes:

the portion of the Work affected by a material change. After the Owner furnishes the evidence, the Owner shall not materially vary such financial arrangements without prior notice to the Contractor.

§ 2.2.2 Except for permits and fees that are the responsibility of the Contractor under the Contract Documents, including those required under Section 3.7.1, the Owner shall secure and pay for necessary approvals, easements, assessments and charges required for construction, use or occupancy of permanent structures or for permanent changes in existing facilities.

§ 2.2.3 The Owner shall furnish surveys describing physical characteristics, legal limitations and utility locations for the site of the Project, and a legal description of the site. The Contractor shall be entitled to rely on the accuracy of information furnished by the Owner but shall exercise proper precautions relating to the safe performance of the Work.

§ 2.2.4 The Owner shall furnish information or services required of the Owner by the Contract Documents with reasonable promptness. The Owner shall also furnish any other information or services under the Owner's control and relevant to the Contractor's performance of the Work with reasonable promptness after receiving the Contractor's written request for such information or services.

§ 2.2.5 Unless otherwise provided in the Contract Documents, the Owner shall furnish to the Contractor one copy of the Contract Documents for purposes of making reproductions pursuant to Section 1.5.2.

§ 2.3 OWNER'S RIGHT TO STOP THE WORK

If the Contractor fails to correct Work that is not in accordance with the requirements of the Contract Documents as required by Section 12.2 or repeatedly fails to carry out Work in accordance with the Contract Documents, the Owner may issue a written order to the Contractor to stop the Work, or any portion thereof, until the cause for such order has been eliminated; however, the right of the Owner to stop the Work shall not give rise to a duty on the part of the Owner to exercise this right for the benefit of the Contractor or any other person or entity, except to the extent required by Section 6.1.3.

§ 2.4 OWNER'S RIGHT TO CARRY OUT THE WORK

If the Contractor defaults or neglects to carry out the Work in accordance with the Contract Documents and fails within a ten-day period after receipt of written notice from the Owner to commence and continue correction of such default or neglect with diligence and promptness, the Owner may, without prejudice to other remedies the Owner may have, correct such deficiencies. In such case an appropriate Change Order shall be issued deducting from payments then or thereafter due the Contractor the reasonable cost of correcting such deficiencies, including Owner's expenses and compensation for the Engineer's additional services made necessary by such default, neglect or failure. Such action by the Owner and amounts charged to the Contractor are both subject to prior approval of the Engineer. If payments then or thereafter due the Contractor are not sufficient to cover such amounts, the Contractor shall pay the difference to the Owner.

ARTICLE 3 CONTRACTOR

§ 3.1 GENERAL

§ 3.1.1 The Contractor is the person or entity identified as such in the Agreement and is referred to throughout the Contract Documents as if singular in number. The Contractor shall be lawfully licensed, if required in the jurisdiction where the Project is located. The Contractor shall designate in writing a representative who shall have express authority to bind the Contractor with respect to all matters under this Contract. The term "Contractor" means the Contractor or the Contractor's authorized representative.

§ 3.1.2 The Contractor shall perform the Work in accordance with the Contract Documents.

§ 3.1.3 The Contractor shall not be relieved of obligations to perform the Work in accordance with the Contract Documents either by activities or duties of the Engineer in the Engineer's administration of the Contract, or by tests, inspections or approvals required or performed by persons or entities other than the Contractor.

AIA Document A201™ – 2007. Copyright © 1911, 1915, 1918, 1925, 1937, 1951, 1958, 1961, 1963, 1966, 1970, 1976, 1987, 1997 and 2007 by The American Institute of Architects. **All rights reserved.** WARNING: This AIA® Document is protected by U.S. Copyright Law and International Treaties. Unauthorized reproduction or distribution of this AIA® Document, or any portion of it, may result in severe civil and criminal penalties, and will be prosecuted to the maximum extent possible under the law. This document was produced by AIA software at 13:50:02 on 02/19/2015 under Order No.2014561723_1 which expires on 02/09/2016, and is not for resale.
User Notes:

§ 3.2 REVIEW OF CONTRACT DOCUMENTS AND FIELD CONDITIONS BY CONTRACTOR

§ 3.2.1 Execution of the Contract by the Contractor is a representation that the Contractor has visited the site, become generally familiar with local conditions under which the Work is to be performed and correlated personal observations with requirements of the Contract Documents.

§ 3.2.2 Because the Contract Documents are complementary, the Contractor shall, before starting each portion of the Work, carefully study and compare the various Contract Documents relative to that portion of the Work, as well as the information furnished by the Owner pursuant to Section 2.2.3, shall take field measurements of any existing conditions related to that portion of the Work, and shall observe any conditions at the site affecting it. These obligations are for the purpose of facilitating coordination and construction by the Contractor and are not for the purpose of discovering errors, omissions, or inconsistencies in the Contract Documents; however, the Contractor shall promptly report to the Engineer any errors, inconsistencies or omissions discovered by or made known to the Contractor as a request for information in such form as the Engineer may require. It is recognized that the Contractor's review is made in the Contractor's capacity as a contractor and not as a licensed design professional, unless otherwise specifically provided in the Contract Documents.

§ 3.2.3 The Contractor is not required to ascertain that the Contract Documents are in accordance with applicable laws, statutes, ordinances, codes, rules and regulations, or lawful orders of public authorities, but the Contractor shall promptly report to the Engineer any nonconformity discovered by or made known to the Contractor as a request for information in such form as the Engineer may require.

§ 3.2.4 If the Contractor believes that additional cost or time is involved because of clarifications or instructions the Engineer issues in response to the Contractor's notices or requests for information pursuant to Sections 3.2.2 or 3.2.3, the Contractor shall make Claims as provided in Article 15. If the Contractor fails to perform the obligations of Sections 3.2.2 or 3.2.3, the Contractor shall pay such costs and damages to the Owner as would have been avoided if the Contractor had performed such obligations. If the Contractor performs those obligations, the Contractor shall not be liable to the Owner or Engineer for damages resulting from errors, inconsistencies or omissions in the Contract Documents, for differences between field measurements or conditions and the Contract Documents, or for nonconformities of the Contract Documents to applicable laws, statutes, ordinances, codes, rules and regulations, and lawful orders of public authorities.

§ 3.3 SUPERVISION AND CONSTRUCTION PROCEDURES

§ 3.3.1 The Contractor shall supervise and direct the Work, using the Contractor's best skill and attention. The Contractor shall be solely responsible for, and have control over, construction means, methods, techniques, sequences and procedures and for coordinating all portions of the Work under the Contract, unless the Contract Documents give other specific instructions concerning these matters. If the Contract Documents give specific instructions concerning construction means, methods, techniques, sequences or procedures, the Contractor shall evaluate the jobsite safety thereof and, except as stated below, shall be fully and solely responsible for the jobsite safety of such means, methods, techniques, sequences or procedures. If the Contractor determines that such means, methods, techniques, sequences or procedures may not be safe, the Contractor shall give timely written notice to the Owner and Engineer and shall not proceed with that portion of the Work without further written instructions from the Engineer. If the Contractor is then instructed to proceed with the required means, methods, techniques, sequences or procedures without acceptance of changes proposed by the Contractor, the Owner shall be solely responsible for any loss or damage arising solely from those Owner-required means, methods, techniques, sequences or procedures.

§ 3.3.2 The Contractor shall be responsible to the Owner for acts and omissions of the Contractor's employees, Subcontractors and their agents and employees, and other persons or entities performing portions of the Work for, or on behalf of, the Contractor or any of its Subcontractors.

§ 3.3.3 The Contractor shall be responsible for inspection of portions of Work already performed to determine that such portions are in proper condition to receive subsequent Work.

§ 3.4 LABOR AND MATERIALS

§ 3.4.1 Unless otherwise provided in the Contract Documents, the Contractor shall provide and pay for labor, materials, equipment, tools, construction equipment and machinery, water, heat, utilities, transportation, and other

AIA Document A201™ – 2007. Copyright © 1911, 1915, 1918, 1925, 1937, 1951, 1958, 1961, 1963, 1966, 1970, 1976, 1987, 1997 and 2007 by The American Institute of Architects. **All rights reserved.** WARNING: This AIA® Document is protected by U.S. Copyright Law and International Treaties. Unauthorized reproduction or distribution of this AIA® Document, or any portion of it, may result in severe civil and criminal penalties, and will be prosecuted to the maximum extent possible under the law. This document was produced by AIA software at 13:50:02 on 02/19/2015 under Order No.2014561723_1 which expires on 02/09/2016, and is not for resale.
User Notes: (1415799623)

facilities and services necessary for proper execution and completion of the Work, whether temporary or permanent and whether or not incorporated or to be incorporated in the Work.

§ 3.4.2 Except in the case of minor changes in the Work authorized by the Engineer in accordance with Sections 3.12.8 or 7.4, the Contractor may make substitutions only with the consent of the Owner, after evaluation by the Engineer and in accordance with a Change Order or Construction Change Directive.

§ 3.4.3 The Contractor shall enforce strict discipline and good order among the Contractor's employees and other persons carrying out the Work. The Contractor shall not permit employment of unfit persons or persons not properly skilled in tasks assigned to them.

§ 3.5 WARRANTY

The Contractor warrants to the Owner and Engineer that materials and equipment furnished under the Contract will be of good quality and new unless the Contract Documents require or permit otherwise. The Contractor further warrants that the Work will conform to the requirements of the Contract Documents and will be free from defects, except for those inherent in the quality of the Work the Contract Documents require or permit. Work, materials, or equipment not conforming to these requirements may be considered defective. The Contractor's warranty excludes remedy for damage or defect caused by abuse, alterations to the Work not executed by the Contractor, improper or insufficient maintenance, improper operation, or normal wear and tear and normal usage. If required by the Engineer, the Contractor shall furnish satisfactory evidence as to the kind and quality of materials and equipment.

§ 3.6 TAXES

The Contractor shall pay all obligatory sales, consumer, use and similar taxes for the Work provided by the Contractor that are legally enacted when bids are received or negotiations concluded, whether or not yet effective or merely scheduled to go into effect.

§ 3.7 PERMITS, FEES, NOTICES AND COMPLIANCE WITH LAWS

§ 3.7.1 Unless otherwise provided in the Contract Documents, the Contractor shall secure and pay for the building permit as well as for other permits, fees, licenses, and inspections by government agencies necessary for proper execution and completion of the Work that are customarily secured after execution of the Contract and legally required at the time bids are received or negotiations concluded.

§ 3.7.2 The Contractor shall comply with and give notices required by applicable laws, statutes, ordinances, codes, rules and regulations, and lawful orders of public authorities applicable to performance of the Work.

§ 3.7.3 If the Contractor performs Work knowing it to be contrary to applicable laws, statutes, ordinances, codes, rules and regulations, or lawful orders of public authorities, the Contractor shall assume appropriate responsibility for such Work and shall bear the costs attributable to correction.

§ 3.7.4 Concealed or Unknown Conditions. If the Contractor encounters conditions at the site that are (1) subsurface or otherwise concealed physical conditions that differ materially from those indicated in the Contract Documents or (2) unknown physical conditions of an unusual nature, that differ materially from those ordinarily found to exist and generally recognized as inherent in construction activities of the character provided for in the Contract Documents, the Contractor shall promptly provide notice to the Owner and the Engineer before conditions are disturbed and in no event later than 3 days after first observance of the conditions. The Engineer will promptly investigate such conditions and, if the Engineer determines that they differ materially and cause an increase or decrease in the Contractor's cost of, or time required for, performance of any part of the Work, will recommend an equitable adjustment in the Contract Sum or Contract Time, or both. If the Engineer determines that the conditions at the site are not materially different from those indicated in the Contract Documents and that no change in the terms of the Contract is justified, the Engineer shall promptly notify the Owner and Contractor in writing, stating the reasons. If either party disputes the Engineer's determination or recommendation, that party may proceed as provided in Article 15.

§ 3.7.5 If, in the course of the Work, the Contractor encounters human remains or recognizes the existence of burial markers, archaeological sites or wetlands not indicated in the Contract Documents, the Contractor shall immediately suspend any operations that would affect them and shall notify the Owner and Engineer. Upon receipt of such notice, the Owner shall promptly take any action necessary to obtain governmental authorization required to resume

AIA Document A201™ – 2007. Copyright © 1911, 1915, 1918, 1925, 1937, 1951, 1958, 1961, 1963, 1966, 1970, 1976, 1987, 1997 and 2007 by The American Institute of Architects. **All rights reserved.** WARNING: This AIA® Document is protected by U.S. Copyright Law and International Treaties. Unauthorized reproduction or distribution of this AIA® Document, or any portion of it, may result in severe civil and criminal penalties, and will be prosecuted to the maximum extent possible under the law. This document was produced by AIA software at 13:50:02 on 02/19/2015 under Order No.2014561723_1 which expires on 02/09/2016, and is not for resale.
User Notes: (1415799623)

the operations. The Contractor shall continue to suspend such operations until otherwise instructed by the Owner but shall continue with all other operations that do not affect those remains or features. Requests for adjustments in the Contract Sum and Contract Time arising from the existence of such remains or features may be made as provided in Article 15.

§ 3.8 ALLOWANCES

§ 3.8.1 The Contractor shall include in the Contract Sum all allowances stated in the Contract Documents. Items covered by allowances shall be supplied for such amounts and by such persons or entities as the Owner may direct, but the Contractor shall not be required to employ persons or entities to whom the Contractor has reasonable objection.

§ 3.8.2 Unless otherwise provided in the Contract Documents,

- **.1** Allowances shall cover the cost to the Contractor of materials and equipment delivered at the site and all required taxes, less applicable trade discounts;
- **.2** Contractor's costs for unloading and handling at the site, labor, installation costs, overhead, profit and other expenses contemplated for stated allowance amounts shall be included in the Contract Sum but not in the allowances; and
- **.3** Whenever costs are more than or less than allowances, the Contract Sum shall be adjusted accordingly by Change Order. The amount of the Change Order shall reflect (1) the difference between actual costs and the allowances under Section 3.8.2.1 and (2) changes in Contractor's costs under Section 3.8.2.2.

§ 3.8.3 Materials and equipment under an allowance shall be selected by the Owner with reasonable promptness.

§ 3.9 SUPERINTENDENT

§ 3.9.1 The Contractor shall employ a competent superintendent and necessary assistants who shall be in attendance at the Project site during performance of the Work. The superintendent shall represent the Contractor, and communications given to the superintendent shall be as binding as if given to the Contractor.

§ 3.9.2 The Contractor, as soon as practicable after award of the Contract, shall furnish in writing to the Owner through the Engineer the name and qualifications of a proposed superintendent. The Engineer may reply within 14 days to the Contractor in writing stating (1) whether the Owner or the Engineer has reasonable objection to the proposed superintendent or (2) that the Engineer requires additional time to review. Failure of the Engineer to reply within the 14 day period shall constitute notice of no reasonable objection.

§ 3.9.3 The Contractor shall not employ a proposed superintendent to whom the Owner or Engineer has made reasonable and timely objection. The Contractor shall not change the superintendent without the Owner's consent, which shall not unreasonably be withheld or delayed.

§ 3.10 CONTRACTOR'S CONSTRUCTION SCHEDULES

§ 3.10.1 The Contractor, promptly after being awarded the Contract, shall prepare and submit for the Owner's and Engineer's information a Contractor's construction schedule for the Work. The schedule shall not exceed time limits current under the Contract Documents, shall be revised at appropriate intervals as required by the conditions of the Work and Project, shall be related to the entire Project to the extent required by the Contract Documents, and shall provide for expeditious and practicable execution of the Work.

§ 3.10.2 The Contractor shall prepare a submittal schedule, promptly after being awarded the Contract and thereafter as necessary to maintain a current submittal schedule, and shall submit the schedule(s) for the Engineer's approval. The Engineer's approval shall not unreasonably be delayed or withheld. The submittal schedule shall (1) be coordinated with the Contractor's construction schedule, and (2) allow the Engineer reasonable time to review submittals. If the Contractor fails to submit a submittal schedule, the Contractor shall not be entitled to any increase in Contract Sum or extension of Contract Time based on the time required for review of submittals.

§ 3.10.3 The Contractor shall perform the Work in general accordance with the most recent schedules submitted to the Owner and Engineer.

AIA Document A201™ – 2007. Copyright © 1911, 1915, 1918, 1925, 1937, 1951, 1958, 1961, 1963, 1966, 1970, 1976, 1987, 1997 and 2007 by The American Institute of Architects. **All rights reserved.** WARNING: This AIA® Document is protected by U.S. Copyright Law and International Treaties. Unauthorized reproduction or distribution of this AIA® Document, or any portion of it, may result in severe civil and criminal penalties, and will be prosecuted to the maximum extent possible under the law. This document was produced by AIA software at 13:50:02 on 02/19/2015 under Order No.2014561723_1 which expires on 02/09/2016, and is not for resale.
User Notes:

(1415799623)

§ 3.11 DOCUMENTS AND SAMPLES AT THE SITE

The Contractor shall maintain at the site for the Owner one copy of the Drawings, Specifications, Addenda, Change Orders and other Modifications, in good order and marked currently to indicate field changes and selections made during construction, and one copy of approved Shop Drawings, Product Data, Samples and similar required submittals. These shall be available to the Engineer and shall be delivered to the Engineer for submittal to the Owner upon completion of the Work as a record of the Work as constructed.

§ 3.12 SHOP DRAWINGS, PRODUCT DATA AND SAMPLES

§ 3.12.1 Shop Drawings are drawings, diagrams, schedules and other data specially prepared for the Work by the Contractor or a Subcontractor, Sub-subcontractor, manufacturer, supplier or distributor to illustrate some portion of the Work.

§ 3.12.2 Product Data are illustrations, standard schedules, performance charts, instructions, brochures, diagrams and other information furnished by the Contractor to illustrate materials or equipment for some portion of the Work.

§ 3.12.3 Samples are physical examples that illustrate materials, equipment or workmanship and establish standards by which the Work will be judged.

§ 3.12.4 Shop Drawings, Product Data, Samples and similar submittals are not Contract Documents. Their purpose is to demonstrate the way by which the Contractor proposes to conform to the information given and the design concept expressed in the Contract Documents for those portions of the Work for which the Contract Documents require submittals. Review by the Engineer is subject to the limitations of Section 4.2.7. Informational submittals upon which the Engineer is not expected to take responsive action may be so identified in the Contract Documents. Submittals that are not required by the Contract Documents may be returned by the Engineer without action.

§ 3.12.5 The Contractor shall review for compliance with the Contract Documents, approve and submit to the Engineer Shop Drawings, Product Data, Samples and similar submittals required by the Contract Documents in accordance with the submittal schedule approved by the Engineer or, in the absence of an approved submittal schedule, with reasonable promptness and in such sequence as to cause no delay in the Work or in the activities of the Owner or of separate contractors.

§ 3.12.6 By submitting Shop Drawings, Product Data, Samples and similar submittals, the Contractor represents to the Owner and Engineer that the Contractor has (1) reviewed and approved them, (2) determined and verified materials, field measurements and field construction criteria related thereto, or will do so and (3) checked and coordinated the information contained within such submittals with the requirements of the Work and of the Contract Documents.

§ 3.12.7 The Contractor shall perform no portion of the Work for which the Contract Documents require submittal and review of Shop Drawings, Product Data, Samples or similar submittals until the respective submittal has been approved by the Engineer.

§ 3.12.8 The Work shall be in accordance with approved submittals except that the Contractor shall not be relieved of responsibility for deviations from requirements of the Contract Documents by the Engineer's approval of Shop Drawings, Product Data, Samples or similar submittals unless the Contractor has specifically informed the Engineer in writing of such deviation at the time of submittal and (1) the Engineer has given written approval to the specific deviation as a minor change in the Work, or (2) a Change Order or Construction Change Directive has been issued authorizing the deviation. The Contractor shall not be relieved of responsibility for errors or omissions in Shop Drawings, Product Data, Samples or similar submittals by the Engineer's approval thereof.

§ 3.12.9 The Contractor shall direct specific attention, in writing or on resubmitted Shop Drawings, Product Data, Samples or similar submittals, to revisions other than those requested by the Engineer on previous submittals. In the absence of such written notice, the Engineer's approval of a resubmission shall not apply to such revisions.

§ 3.12.10 The Contractor shall not be required to provide professional services that constitute the practice of architecture or engineering unless such services are specifically required by the Contract Documents for a portion of the Work or unless the Contractor needs to provide such services in order to carry out the Contractor's responsibilities for construction means, methods, techniques, sequences and procedures. The Contractor shall not be

AIA Document A201™ – 2007. Copyright © 1911, 1915, 1918, 1925, 1937, 1951, 1958, 1961, 1963, 1966, 1970, 1976, 1987, 1997 and 2007 by The American Institute of Architects. **All rights reserved.** WARNING: This AIA® Document is protected by U.S. Copyright Law and International Treaties. Unauthorized reproduction or distribution of this AIA® Document, or any portion of it, may result in severe civil and criminal penalties, and will be prosecuted to the maximum extent possible under the law. This document was produced by AIA software at 13:50:02 on 02/19/2015 under Order No.2014561723_1 which expires on 02/09/2016, and is not for resale.
User Notes: (1415799623)

required to provide professional services in violation of applicable law. If professional design services or certifications by a design professional related to systems, materials or equipment are specifically required of the Contractor by the Contract Documents, the Owner and the Engineer will specify all performance and design criteria that such services must satisfy. The Contractor shall cause such services or certifications to be provided by a properly licensed design professional, whose signature and seal shall appear on all drawings, calculations, specifications, certifications, Shop Drawings and other submittals prepared by such professional. Shop Drawings and other submittals related to the Work designed or certified by such professional, if prepared by others, shall bear such professional's written approval when submitted to the Engineer. The Owner and the Engineer shall be entitled to rely upon the adequacy, accuracy and completeness of the services, certifications and approvals performed or provided by such design professionals, provided the Owner and Engineer have specified to the Contractor all performance and design criteria that such services must satisfy. Pursuant to this Section 3.12.10, the Engineer will review, approve or take other appropriate action on submittals only for the limited purpose of checking for conformance with information given and the design concept expressed in the Contract Documents. The Contractor shall not be responsible for the adequacy of the performance and design criteria specified in the Contract Documents.

§ 3.13 USE OF SITE

The Contractor shall confine operations at the site to areas permitted by applicable laws, statutes, ordinances, codes, rules and regulations, and lawful orders of public authorities and the Contract Documents and shall not unreasonably encumber the site with materials or equipment.

§ 3.14 CUTTING AND PATCHING

§ 3.14.1 The Contractor shall be responsible for cutting, fitting or patching required to complete the Work or to make its parts fit together properly. All areas requiring cutting, fitting and patching shall be restored to the condition existing prior to the cutting, fitting and patching, unless otherwise required by the Contract Documents.

§ 3.14.2 The Contractor shall not damage or endanger a portion of the Work or fully or partially completed construction of the Owner or separate contractors by cutting, patching or otherwise altering such construction, or by excavation. The Contractor shall not cut or otherwise alter such construction by the Owner or a separate contractor except with written consent of the Owner and of such separate contractor; such consent shall not be unreasonably withheld. The Contractor shall not unreasonably withhold from the Owner or a separate contractor the Contractor's consent to cutting or otherwise altering the Work.

§ 3.15 CLEANING UP

§ 3.15.1 The Contractor shall keep the premises and surrounding area free from accumulation of waste materials or rubbish caused by operations under the Contract. At completion of the Work, the Contractor shall remove waste materials, rubbish, the Contractor's tools, construction equipment, machinery and surplus materials from and about the Project.

§ 3.15.2 If the Contractor fails to clean up as provided in the Contract Documents, the Owner may do so and Owner shall be entitled to reimbursement from the Contractor.

§ 3.16 ACCESS TO WORK

The Contractor shall provide the Owner and Engineer access to the Work in preparation and progress wherever located.

§ 3.17 ROYALTIES, PATENTS AND COPYRIGHTS

The Contractor shall pay all royalties and license fees. The Contractor shall defend suits or claims for infringement of copyrights and patent rights and shall hold the Owner and Engineer harmless from loss on account thereof, but shall not be responsible for such defense or loss when a particular design, process or product of a particular manufacturer or manufacturers is required by the Contract Documents, or where the copyright violations are contained in Drawings, Specifications or other documents prepared by the Owner or Engineer. However, if the Contractor has reason to believe that the required design, process or product is an infringement of a copyright or a patent, the Contractor shall be responsible for such loss unless such information is promptly furnished to the Engineer.

AIA Document A201™ – 2007. Copyright © 1911, 1915, 1918, 1925, 1937, 1951, 1958, 1961, 1963, 1966, 1970, 1976, 1987, 1997 and 2007 by The American Institute of Architects. **All rights reserved.** WARNING: This AIA® Document is protected by U.S. Copyright Law and International Treaties. Unauthorized reproduction or distribution of this AIA® Document, or any portion of it, may result in severe civil and criminal penalties, and will be prosecuted to the maximum extent possible under the law. This document was produced by AIA software at 13:50:02 on 02/19/2015 under Order No.2014561723_1 which expires on 02/09/2016, and is not for resale.
User Notes:

§ 3.18 INDEMNIFICATION

§ 3.18.1 To the fullest extent permitted by law the Contractor shall indemnify and hold harmless the Owner, Engineer, Engineer's consultants, and agents and employees of any of them from and against claims, damages, losses and expenses, including but not limited to attorneys' fees, arising out of or resulting from performance of the Work, provided that such claim, damage, loss or expense is attributable to bodily injury, sickness, disease or death, or to injury to or destruction of tangible property (other than the Work itself), but only to the extent caused by the negligent acts or omissions of the Contractor, a Subcontractor, anyone directly or indirectly employed by them or anyone for whose acts they may be liable, regardless of whether or not such claim, damage, loss or expense is caused in part by a party indemnified hereunder. Such obligation shall not be construed to negate, abridge, or reduce other rights or obligations of indemnity that would otherwise exist as to a party or person described in this Section 3.18.

§ 3.18.2 In claims against any person or entity indemnified under this Section 3.18 by an employee of the Contractor, a Subcontractor, anyone directly or indirectly employed by them or anyone for whose acts they may be liable, the indemnification obligation under Section 3.18.1 shall not be limited by a limitation on amount or type of damages, compensation or benefits payable by or for the Contractor or a Subcontractor under workers' compensation acts, disability benefit acts or other employee benefit acts.

ARTICLE 4 ENGINEER

§ 4.1 GENERAL

§ 4.1.1 The Owner shall retain an Engineer lawfully licensed to practice Engineering or an entity lawfully practicing Engineering in the jurisdiction where the Project is located. That person or entity is identified as the Engineer in the Agreement and is referred to throughout the Contract Documents as if singular in number.

§ 4.1.2 Duties, responsibilities and limitations of authority of the Engineer as set forth in the Contract Documents shall not be restricted, modified or extended without written consent of the Owner, Contractor and Engineer. Consent shall not be unreasonably withheld.

§ 4.1.3 If the employment of the Engineer is terminated, the Owner shall employ a successor Engineer as to whom the Contractor has no reasonable objection and whose status under the Contract Documents shall be that of the Engineer.

§ 4.2 ADMINISTRATION OF THE CONTRACT

§ 4.2.1 The Engineer will provide administration of the Contract as described in the Contract Documents and will be an Owner's representative during construction until the date the Engineer issues the final Certificate for Payment. The Engineer will have authority to act on behalf of the Owner only to the extent provided in the Contract Documents.

§ 4.2.2 The Engineer will visit the site at intervals appropriate to the stage of construction, or as otherwise agreed with the Owner, to become generally familiar with the progress and quality of the portion of the Work completed, and to determine in general if the Work observed is being performed in a manner indicating that the Work, when fully completed, will be in accordance with the Contract Documents. However, the Engineer will not be required to make exhaustive or continuous on-site inspections to check the quality or quantity of the Work. The Engineer will not have control over, charge of, or responsibility for, the construction means, methods, techniques, sequences or procedures, or for the safety precautions and programs in connection with the Work, since these are solely the Contractor's rights and responsibilities under the Contract Documents, except as provided in Section 3.3.1.

§ 4.2.3 On the basis of the site visits, the Engineer will keep the Owner reasonably informed about the progress and quality of the portion of the Work completed, and report to the Owner (1) known deviations from the Contract Documents and from the most recent construction schedule submitted by the Contractor, and (2) defects and deficiencies observed in the Work. The Engineer will not be responsible for the Contractor's failure to perform the Work in accordance with the requirements of the Contract Documents. The Engineer will not have control over or charge of and will not be responsible for acts or omissions of the Contractor, Subcontractors, or their agents or employees, or any other persons or entities performing portions of the Work.

AIA Document A201™ – 2007. Copyright © 1911, 1915, 1918, 1925, 1937, 1951, 1958, 1961, 1963, 1966, 1970, 1976, 1987, 1997 and 2007 by The American Institute of Architects. **All rights reserved.** WARNING: This AIA® Document is protected by U.S. Copyright Law and International Treaties. Unauthorized reproduction or distribution of this AIA® Document, or any portion of it, may result in severe civil and criminal penalties, and will be prosecuted to the maximum extent possible under the law. This document was produced by AIA software at 13:50:02 on 02/19/2015 under Order No.2014561723_1 which expires on 02/09/2016, and is not for resale.
User Notes: (1415799623)

§ 4.2.4 COMMUNICATIONS FACILITATING CONTRACT ADMINISTRATION
Except as otherwise provided in the Contract Documents or when direct communications have been specially authorized, the Owner and Contractor shall endeavor to communicate with each other through the Engineer about matters arising out of or relating to the Contract. Communications by and with the Engineer's consultants shall be through the Engineer. Communications by and with Subcontractors and material suppliers shall be through the Contractor. Communications by and with separate contractors shall be through the Owner.

§ 4.2.5 Based on the Engineer's evaluations of the Contractor's Applications for Payment, the Engineer will review and certify the amounts due the Contractor and will issue Certificates for Payment in such amounts.

§ 4.2.6 The Engineer has authority to reject Work that does not conform to the Contract Documents. Whenever the Engineer considers it necessary or advisable, the Engineer will have authority to require inspection or testing of the Work in accordance with Sections 13.5.2 and 13.5.3, whether or not such Work is fabricated, installed or completed. However, neither this authority of the Engineer nor a decision made in good faith either to exercise or not to exercise such authority shall give rise to a duty or responsibility of the Engineer to the Contractor, Subcontractors, material and equipment suppliers, their agents or employees, or other persons or entities performing portions of the Work.

§ 4.2.7 The Engineer will review and approve, or take other appropriate action upon, the Contractor's submittals such as Shop Drawings, Product Data and Samples, but only for the limited purpose of checking for conformance with information given and the design concept expressed in the Contract Documents. The Engineer's action will be taken in accordance with the submittal schedule approved by the Engineer or, in the absence of an approved submittal schedule, with reasonable promptness while allowing sufficient time in the Engineer's professional judgment to permit adequate review. Review of such submittals is not conducted for the purpose of determining the accuracy and completeness of other details such as dimensions and quantities, or for substantiating instructions for installation or performance of equipment or systems, all of which remain the responsibility of the Contractor as required by the Contract Documents. The Engineer's review of the Contractor's submittals shall not relieve the Contractor of the obligations under Sections 3.3, 3.5 and 3.12. The Engineer's review shall not constitute approval of safety precautions or, unless otherwise specifically stated by the Engineer, of any construction means, methods, techniques, sequences or procedures. The Engineer's approval of a specific item shall not indicate approval of an assembly of which the item is a component.

§ 4.2.8 The Engineer will prepare Change Orders and Construction Change Directives, and may authorize minor changes in the Work as provided in Section 7.4. The Engineer will investigate and make determinations and recommendations regarding concealed and unknown conditions as provided in Section 3.7.4.

§ 4.2.9 The Engineer will conduct inspections to determine the date or dates of Substantial Completion and the date of final completion; issue Certificates of Substantial Completion pursuant to Section 9.8; receive and forward to the Owner, for the Owner's review and records, written warranties and related documents required by the Contract and assembled by the Contractor pursuant to Section 9.10; and issue a final Certificate for Payment pursuant to Section 9.10.

§ 4.2.10 If the Owner and Engineer agree, the Engineer will provide one or more project representatives to assist in carrying out the Engineer's responsibilities at the site. The duties, responsibilities and limitations of authority of such project representatives shall be as set forth in an exhibit to be incorporated in the Contract Documents.

§ 4.2.11 The Engineer will interpret and decide matters concerning performance under, and requirements of, the Contract Documents on written request of either the Owner or Contractor. The Engineer's response to such requests will be made in writing within any time limits agreed upon or otherwise with reasonable promptness.

§ 4.2.12 Interpretations and decisions of the Engineer will be consistent with the intent of, and reasonably inferable from, the Contract Documents and will be in writing or in the form of drawings. When making such interpretations and decisions, the Engineer will endeavor to secure faithful performance by both Owner and Contractor, will not show partiality to either and will not be liable for results of interpretations or decisions rendered in good faith.

§ 4.2.13 The Engineer's decisions on matters relating to aesthetic effect will be final if consistent with the intent expressed in the Contract Documents.

AIA Document A201™ – 2007. Copyright © 1911, 1915, 1918, 1925, 1937, 1951, 1958, 1961, 1963, 1966, 1970, 1976, 1987, 1997 and 2007 by The American Institute of Architects. **All rights reserved.** WARNING: This AIA® Document is protected by U.S. Copyright Law and International Treaties. Unauthorized reproduction or distribution of this AIA® Document, or any portion of it, may result in severe civil and criminal penalties, and will be prosecuted to the maximum extent possible under the law. This document was produced by AIA software at 13:50:02 on 02/19/2015 under Order No.2014561723_1 which expires on 02/09/2016, and is not for resale.
User Notes: (1415799623)

§ 4.2.14 The Engineer will review and respond to requests for information about the Contract Documents. The Engineer's response to such requests will be made in writing within any time limits agreed upon or otherwise with reasonable promptness. If appropriate, the Engineer will prepare and issue supplemental Drawings and Specifications in response to the requests for information.

ARTICLE 5 SUBCONTRACTORS

§ 5.1 DEFINITIONS

§ 5.1.1 A Subcontractor is a person or entity who has a direct contract with the Contractor to perform a portion of the Work at the site. The term "Subcontractor" is referred to throughout the Contract Documents as if singular in number and means a Subcontractor or an authorized representative of the Subcontractor. The term "Subcontractor" does not include a separate contractor or subcontractors of a separate contractor.

§ 5.1.2 A Sub-subcontractor is a person or entity who has a direct or indirect contract with a Subcontractor to perform a portion of the Work at the site. The term "Sub-subcontractor" is referred to throughout the Contract Documents as if singular in number and means a Sub-subcontractor or an authorized representative of the Sub-subcontractor.

§ 5.2 AWARD OF SUBCONTRACTS AND OTHER CONTRACTS FOR PORTIONS OF THE WORK

§ 5.2.1 Unless otherwise stated in the Contract Documents or the bidding requirements, the Contractor, as soon as practicable after award of the Contract, shall furnish in writing to the Owner through the Engineer the names of persons or entities (including those who are to furnish materials or equipment fabricated to a special design) proposed for each principal portion of the Work. The Engineer may reply within 14 days to the Contractor in writing stating (1) whether the Owner or the Engineer has reasonable objection to any such proposed person or entity or (2) that the Engineer requires additional time for review. Failure of the Owner or Engineer to reply within the 14-day period shall constitute notice of no reasonable objection.

§ 5.2.2 The Contractor shall not contract with a proposed person or entity to whom the Owner or Engineer has made reasonable and timely objection. The Contractor shall not be required to contract with anyone to whom the Contractor has made reasonable objection.

§ 5.2.3 If the Owner or Engineer has reasonable objection to a person or entity proposed by the Contractor, the Contractor shall propose another to whom the Owner or Engineer has no reasonable objection. If the proposed but rejected Subcontractor was reasonably capable of performing the Work, the Contract Sum and Contract Time shall be increased or decreased by the difference, if any, occasioned by such change, and an appropriate Change Order shall be issued before commencement of the substitute Subcontractor's Work. However, no increase in the Contract Sum or Contract Time shall be allowed for such change unless the Contractor has acted promptly and responsively in submitting names as required.

§ 5.2.4 The Contractor shall not substitute a Subcontractor, person or entity previously selected if the Owner or Engineer makes reasonable objection to such substitution.

§ 5.3 SUBCONTRACTUAL RELATIONS

By appropriate agreement, written where legally required for validity, the Contractor shall require each Subcontractor, to the extent of the Work to be performed by the Subcontractor, to be bound to the Contractor by terms of the Contract Documents, and to assume toward the Contractor all the obligations and responsibilities, including the responsibility for safety of the Subcontractor's Work, which the Contractor, by these Documents, assumes toward the Owner and Engineer. Each subcontract agreement shall preserve and protect the rights of the Owner and Engineer under the Contract Documents with respect to the Work to be performed by the Subcontractor so that subcontracting thereof will not prejudice such rights, and shall allow to the Subcontractor, unless specifically provided otherwise in the subcontract agreement, the benefit of all rights, remedies and redress against the Contractor that the Contractor, by the Contract Documents, has against the Owner. Where appropriate, the Contractor shall require each Subcontractor to enter into similar agreements with Sub-subcontractors. The Contractor shall make available to each proposed Subcontractor, prior to the execution of the subcontract agreement, copies of the Contract Documents to which the Subcontractor will be bound, and, upon written request of the Subcontractor, identify to the Subcontractor terms and conditions of the proposed subcontract agreement that may be at variance with the Contract Documents. Subcontractors will similarly make copies of applicable portions of such documents available to their respective proposed Sub-subcontractors.

AIA Document A201™ – 2007. Copyright © 1911, 1915, 1918, 1925, 1937, 1951, 1958, 1961, 1963, 1966, 1970, 1976, 1987, 1997 and 2007 by The American Institute of Architects. **All rights reserved.** WARNING: This AIA® Document is protected by U.S. Copyright Law and International Treaties. Unauthorized reproduction or distribution of this AIA® Document, or any portion of it, may result in severe civil and criminal penalties, and will be prosecuted to the maximum extent possible under the law. This document was produced by AIA software at 13:50:02 on 02/19/2015 under Order No.2014561723_1 which expires on 02/09/2016, and is not for resale.
User Notes:

(1415799623)

§ 5.4 CONTINGENT ASSIGNMENT OF SUBCONTRACTS

§ 5.4.1 Each subcontract agreement for a portion of the Work is assigned by the Contractor to the Owner, provided that

- **.1** assignment is effective only after termination of the Contract by the Owner for cause pursuant to Section 14.2 and only for those subcontract agreements that the Owner accepts by notifying the Subcontractor and Contractor in writing; and
- **.2** assignment is subject to the prior rights of the surety, if any, obligated under bond relating to the Contract.

When the Owner accepts the assignment of a subcontract agreement, the Owner assumes the Contractor's rights and obligations under the subcontract.

§ 5.4.2 Upon such assignment, if the Work has been suspended for more than 30 days, the Subcontractor's compensation shall be equitably adjusted for increases in cost resulting from the suspension.

§ 5.4.3 Upon such assignment to the Owner under this Section 5.4, the Owner may further assign the subcontract to a successor contractor or other entity. If the Owner assigns the subcontract to a successor contractor or other entity, the Owner shall nevertheless remain legally responsible for all of the successor contractor's obligations under the subcontract.

ARTICLE 6 CONSTRUCTION BY OWNER OR BY SEPARATE CONTRACTORS

§ 6.1 OWNER'S RIGHT TO PERFORM CONSTRUCTION AND TO AWARD SEPARATE CONTRACTS

§ 6.1.1 The Owner reserves the right to perform construction or operations related to the Project with the Owner's own forces, and to award separate contracts in connection with other portions of the Project or other construction or operations on the site under Conditions of the Contract identical or substantially similar to these including those portions related to insurance and waiver of subrogation. If the Contractor claims that delay or additional cost is involved because of such action by the Owner, the Contractor shall make such Claim as provided in Article 15.

§ 6.1.2 When separate contracts are awarded for different portions of the Project or other construction or operations on the site, the term "Contractor" in the Contract Documents in each case shall mean the Contractor who executes each separate Owner-Contractor Agreement.

§ 6.1.3 The Owner shall provide for coordination of the activities of the Owner's own forces and of each separate contractor with the Work of the Contractor, who shall cooperate with them. The Contractor shall participate with other separate contractors and the Owner in reviewing their construction schedules. The Contractor shall make any revisions to the construction schedule deemed necessary after a joint review and mutual agreement. The construction schedules shall then constitute the schedules to be used by the Contractor, separate contractors and the Owner until subsequently revised.

§ 6.1.4 Unless otherwise provided in the Contract Documents, when the Owner performs construction or operations related to the Project with the Owner's own forces, the Owner shall be deemed to be subject to the same obligations and to have the same rights that apply to the Contractor under the Conditions of the Contract, including, without excluding others, those stated in Article 3, this Article 6 and Articles 10, 11 and 12.

§ 6.2 MUTUAL RESPONSIBILITY

§ 6.2.1 The Contractor shall afford the Owner and separate contractors reasonable opportunity for introduction and storage of their materials and equipment and performance of their activities, and shall connect and coordinate the Contractor's construction and operations with theirs as required by the Contract Documents.

§ 6.2.2 If part of the Contractor's Work depends for proper execution or results upon construction or operations by the Owner or a separate contractor, the Contractor shall, prior to proceeding with that portion of the Work, promptly report to the Engineer apparent discrepancies or defects in such other construction that would render it unsuitable for such proper execution and results. Failure of the Contractor so to report shall constitute an acknowledgment that the Owner's or separate contractor's completed or partially completed construction is fit and proper to receive the Contractor's Work, except as to defects not then reasonably discoverable.

AIA Document A201™ – 2007. Copyright © 1911, 1915, 1918, 1925, 1937, 1951, 1958, 1961, 1963, 1966, 1970, 1976, 1987, 1997 and 2007 by The American Institute of Architects. **All rights reserved.** WARNING: This AIA® Document is protected by U.S. Copyright Law and International Treaties. Unauthorized reproduction or distribution of this AIA® Document, or any portion of it, may result in severe civil and criminal penalties, and will be prosecuted to the maximum extent possible under the law. This document was produced by AIA software at 13:50:02 on 02/19/2015 under Order No.2014561723_1 which expires on 02/09/2016, and is not for resale.
User Notes: (1415799623)

§ 6.2.3 The Contractor shall reimburse the Owner for costs the Owner incurs that are payable to a separate contractor because of the Contractor's delays, improperly timed activities or defective construction. The Owner shall be responsible to the Contractor for costs the Contractor incurs because of a separate contractor's delays, improperly timed activities, damage to the Work or defective construction.

§ 6.2.4 The Contractor shall promptly remedy damage the Contractor wrongfully causes to completed or partially completed construction or to property of the Owner or separate contractors as provided in Section 10.2.5.

§ 6.2.5 The Owner and each separate contractor shall have the same responsibilities for cutting and patching as are described for the Contractor in Section 3.14.

§ 6.3 OWNER'S RIGHT TO CLEAN UP

If a dispute arises among the Contractor, separate contractors and the Owner as to the responsibility under their respective contracts for maintaining the premises and surrounding area free from waste materials and rubbish, the Owner may clean up and the Engineer will allocate the cost among those responsible.

ARTICLE 7 CHANGES IN THE WORK

§ 7.1 GENERAL

§ 7.1.1 Changes in the Work may be accomplished after execution of the Contract, and without invalidating the Contract, by Change Order, Construction Change Directive or order for a minor change in the Work, subject to the limitations stated in this Article 7 and elsewhere in the Contract Documents.

§ 7.1.2 A Change Order shall be based upon agreement among the Owner, Contractor and Engineer; a Construction Change Directive requires agreement by the Owner and Engineer and may or may not be agreed to by the Contractor; an order for a minor change in the Work may be issued by the Engineer alone.

§ 7.1.3 Changes in the Work shall be performed under applicable provisions of the Contract Documents, and the Contractor shall proceed promptly, unless otherwise provided in the Change Order, Construction Change Directive or order for a minor change in the Work.

§ 7.2 CHANGE ORDERS

§ 7.2.1 A Change Order is a written instrument prepared by the Engineer and signed by the Owner, Contractor and Engineer stating their agreement upon all of the following:

.1 The change in the Work;
.2 The amount of the adjustment, if any, in the Contract Sum; and
.3 The extent of the adjustment, if any, in the Contract Time.

§ 7.2.2 If unit prices are stated in the Contract Documents or subsequently agreed upon, and if quantities originally contemplated are materially changed in a proposed Change Order so that application of such unit prices to quantities of Work proposed will cause substantial inequity to the Owner or Contractor, the applicable unit prices shall be equitably adjusted.

§ 7.2.3 If the Contractor does not respond promptly or disagrees with the method for adjustment in the Contract Sum, the Engineer shall determine the method and the adjustment on the basis of reasonable expenditures and savings of those performing the Work attributable to the change, including, in case of an increase in the Contract Sum, an amount for overhead and profit as set forth in the Agreement, or if no such amount is set forth in the Agreement, a reasonable amount. In such case, and also under Section 7.3.3.3, the Contractor shall keep and present, in such form as the Engineer may prescribe, an itemized accounting together with appropriate supporting data. Unless otherwise provided in the Contract Documents, costs for the purposes of this Section 7.3.7 shall be limited to the following:

.1 Costs of labor, including social security, unemployment insurance, fringe benefits required by agreement or custom, and workers' compensation insurance;
.2 Costs of materials, supplies and equipment, including cost of transportation, whether incorporated or consumed;

AIA Document A201™ – 2007. Copyright © 1911, 1915, 1918, 1925, 1937, 1951, 1958, 1961, 1963, 1966, 1970, 1976, 1987, 1997 and 2007 by The American Institute of Architects. **All rights reserved.** WARNING: This AIA® Document is protected by U.S. Copyright Law and International Treaties. Unauthorized reproduction or distribution of this AIA® Document, or any portion of it, may result in severe civil and criminal penalties, and will be prosecuted to the maximum extent possible under the law. This document was produced by AIA software at 13:50:02 on 02/19/2015 under Order No.2014561723_1 which expires on 02/09/2016, and is not for resale.
User Notes: (1415799623)

.3 Rental costs of machinery and equipment, exclusive of hand tools, whether rented from the Contractor or others;

.4 Costs of premiums for all bonds and insurance, permit fees, and sales, use or similar taxes related to the Work; and

.5 Additional costs of supervision and field office personnel directly attributable to the change.

§ 7.2.4 The amount of credit to be allowed by the Contractor to the Owner for a deletion or change that results in a net decrease in the Contract Sum shall be actual net cost as confirmed by the Engineer. When both additions and credits covering related Work or substitutions are involved in a change, the allowance for overhead and profit shall be figured on the basis of net increase, if any, with respect to that change.

§ 7.2.5 When the Owner and Contractor agree with a determination made by the Engineer concerning the adjustments in the Contract Sum and Contract Time, or otherwise reach agreement upon the adjustments, such agreement shall be effective immediately after issuance of a Change Order.

§ 7.3 MINOR CHANGES IN THE WORK

The Engineer has authority to order minor changes in the Work not involving adjustment in the Contract Sum or extension of the Contract Time and not inconsistent with the intent of the Contract Documents. Such changes will be effected by written order signed by the Engineer and shall be binding on the Owner and Contractor.

(Paragraphs deleted)

ARTICLE 8 TIME

§ 8.1 DEFINITIONS

§ 8.1.1 Unless otherwise provided, Contract Time is the period of time, including authorized adjustments, allotted in the Contract Documents for Substantial Completion of the Work.

§ 8.1.2 The date of commencement of the Work is the date established in the Agreement.

§ 8.1.3 The date of Substantial Completion is the date certified by the Engineer in accordance with Section 9.8.

§ 8.1.4 The term "day" as used in the Contract Documents shall mean calendar day unless otherwise specifically defined.

§ 8.2 PROGRESS AND COMPLETION

§ 8.2.1 Time limits stated in the Contract Documents are of the essence of the Contract. By executing the Agreement the Contractor confirms that the Contract Time is a reasonable period for performing the Work.

§ 8.2.2 The Contractor shall not knowingly, except by agreement or instruction of the Owner in writing, prematurely commence operations on the site or elsewhere prior to the effective date of insurance required by Article 11 to be furnished by the Contractor and Owner. The date of commencement of the Work shall not be changed by the effective date of such insurance.

§ 8.2.3 The Contractor shall proceed expeditiously with adequate forces and shall achieve Substantial Completion within the Contract Time.

§ 8.3 DELAYS AND EXTENSIONS OF TIME

§ 8.3.1 If the Contractor is delayed at any time in the commencement or progress of the Work by an act or neglect of the Owner or Engineer, or of an employee of either, or of a separate contractor employed by the Owner; or by changes ordered in the Work; or by labor disputes, fire, unusual delay in deliveries, unavoidable casualties or other causes beyond the Contractor's control; or by delay authorized by the Owner pending mediation and arbitration; or by other causes that the Engineer determines may justify delay, then the Contract Time shall be extended by Change Order for such reasonable time as the Engineer may determine.

§ 8.3.2 Claims relating to time shall be made in accordance with applicable provisions of Article 15.

§ 8.3.3 This Section 8.3 does not preclude recovery of damages for delay by either party under other provisions of the Contract Documents.

AIA Document A201™ – 2007. Copyright © 1911, 1915, 1918, 1925, 1937, 1951, 1958, 1961, 1963, 1966, 1970, 1976, 1987, 1997 and 2007 by The American Institute of Architects. **All rights reserved.** WARNING: This AIA® Document is protected by U.S. Copyright Law and International Treaties. Unauthorized reproduction or distribution of this AIA® Document, or any portion of it, may result in severe civil and criminal penalties, and will be prosecuted to the maximum extent possible under the law. This document was produced by AIA software at 13:50:02 on 02/19/2015 under Order No.2014561723_1 which expires on 02/09/2016, and is not for resale.
User Notes: (1415799623)

ARTICLE 9 PAYMENTS AND COMPLETION

§ 9.1 CONTRACT SUM

The Contract Sum is stated in the Agreement and, including authorized adjustments, is the total amount payable by the Owner to the Contractor for performance of the Work under the Contract Documents.

§ 9.2 SCHEDULE OF VALUES

Where the Contract is based on a stipulated sum or Guaranteed Maximum Price, the Contractor shall submit to the Engineer, before the first Application for Payment, a schedule of values allocating the entire Contract Sum to the various portions of the Work and prepared in such form and supported by such data to substantiate its accuracy as the Engineer may require. This schedule, unless objected to by the Engineer, shall be used as a basis for reviewing the Contractor's Applications for Payment.

§ 9.3 APPLICATIONS FOR PAYMENT

§ 9.3.1 At least ten days before the date established for each progress payment, the Contractor shall submit to the Engineer an itemized Application for Payment prepared in accordance with the schedule of values, if required under Section 9.2, for completed portions of the Work. Such application shall be notarized, if required, and supported by such data substantiating the Contractor's right to payment as the Owner or Engineer may require, such as copies of requisitions from Subcontractors and material suppliers, and shall reflect retainage if provided for in the Contract Documents.

§ 9.3.1.1 As provided in Section 7.3.9, such applications may include requests for payment on account of changes in the Work that have been properly authorized by Construction Change Directives, or by interim determinations of the Engineer, but not yet included in Change Orders.

§ 9.3.1.2 Applications for Payment shall not include requests for payment for portions of the Work for which the Contractor does not intend to pay a Subcontractor or material supplier, unless such Work has been performed by others whom the Contractor intends to pay.

§ 9.3.2 Unless otherwise provided in the Contract Documents, payments shall be made on account of materials and equipment delivered and suitably stored at the site for subsequent incorporation in the Work. If approved in advance by the Owner, payment may similarly be made for materials and equipment suitably stored off the site at a location agreed upon in writing. Payment for materials and equipment stored on or off the site shall be conditioned upon compliance by the Contractor with procedures satisfactory to the Owner to establish the Owner's title to such materials and equipment or otherwise protect the Owner's interest, and shall include the costs of applicable insurance, storage and transportation to the site for such materials and equipment stored off the site.

§ 9.3.3 The Contractor warrants that title to all Work covered by an Application for Payment will pass to the Owner no later than the time of payment. The Contractor further warrants that upon submittal of an Application for Payment all Work for which Certificates for Payment have been previously issued and payments received from the Owner shall, to the best of the Contractor's knowledge, information and belief, be free and clear of liens, claims, security interests or encumbrances in favor of the Contractor, Subcontractors, material suppliers, or other persons or entities making a claim by reason of having provided labor, materials and equipment relating to the Work.

§ 9.4 CERTIFICATES FOR PAYMENT

§ 9.4.1 The Engineer will, within seven days after receipt of the Contractor's Application for Payment, either issue to the Owner a Certificate for Payment, with a copy to the Contractor, for such amount as the Engineer determines is properly due, or notify the Contractor and Owner in writing of the Engineer's reasons for withholding certification in whole or in part as provided in Section 9.5.1.

§ 9.4.2 The issuance of a Certificate for Payment will constitute a representation by the Engineer to the Owner, based on the Engineer's evaluation of the Work and the data comprising the Application for Payment, that, to the best of the Engineer's knowledge, information and belief, the Work has progressed to the point indicated and that the quality of the Work is in accordance with the Contract Documents. The foregoing representations are subject to an evaluation of the Work for conformance with the Contract Documents upon Substantial Completion, to results of subsequent tests and inspections, to correction of minor deviations from the Contract Documents prior to completion and to specific qualifications expressed by the Engineer. The issuance of a Certificate for Payment will further

AIA Document A201™ – 2007. Copyright © 1911, 1915, 1918, 1925, 1937, 1951, 1958, 1961, 1963, 1966, 1970, 1976, 1987, 1997 and 2007 by The American Institute of Architects. **All rights reserved.** WARNING: This AIA® Document is protected by U.S. Copyright Law and International Treaties. Unauthorized reproduction or distribution of this AIA® Document, or any portion of it, may result in severe civil and criminal penalties, and will be prosecuted to the maximum extent possible under the law. This document was produced by AIA software at 13:50:02 on 02/19/2015 under Order No.2014561723_1 which expires on 02/09/2016, and is not for resale.
User Notes: (1415799623)

constitute a representation that the Contractor is entitled to payment in the amount certified. However, the issuance of a Certificate for Payment will not be a representation that the Engineer has (1) made exhaustive or continuous on-site inspections to check the quality or quantity of the Work, (2) reviewed construction means, methods, techniques, sequences or procedures, (3) reviewed copies of requisitions received from Subcontractors and material suppliers and other data requested by the Owner to substantiate the Contractor's right to payment, or (4) made examination to ascertain how or for what purpose the Contractor has used money previously paid on account of the Contract Sum.

§ 9.5 DECISIONS TO WITHHOLD CERTIFICATION

§ 9.5.1 The Engineer may withhold a Certificate for Payment in whole or in part, to the extent reasonably necessary to protect the Owner, if in the Engineer's opinion the representations to the Owner required by Section 9.4.2 cannot be made. If the Engineer is unable to certify payment in the amount of the Application, the Engineer will notify the Contractor and Owner as provided in Section 9.4.1. If the Contractor and Engineer cannot agree on a revised amount, the Engineer will promptly issue a Certificate for Payment for the amount for which the Engineer is able to make such representations to the Owner. The Engineer may also withhold a Certificate for Payment or, because of subsequently discovered evidence, may nullify the whole or a part of a Certificate for Payment previously issued, to such extent as may be necessary in the Engineer's opinion to protect the Owner from loss for which the Contractor is responsible, including loss resulting from acts and omissions described in Section 3.3.2, because of

- **.1** defective Work not remedied;
- **.2** third party claims filed or reasonable evidence indicating probable filing of such claims unless security acceptable to the Owner is provided by the Contractor;
- **.3** failure of the Contractor to make payments properly to Subcontractors or for labor, materials or equipment;
- **.4** reasonable evidence that the Work cannot be completed for the unpaid balance of the Contract Sum;
- **.5** damage to the Owner or a separate contractor;
- **.6** reasonable evidence that the Work will not be completed within the Contract Time, and that the unpaid balance would not be adequate to cover actual or liquidated damages for the anticipated delay; or
- **.7** repeated failure to carry out the Work in accordance with the Contract Documents.

§ 9.5.2 When the above reasons for withholding certification are removed, certification will be made for amounts previously withheld.

§ 9.5.3 If the Engineer withholds certification for payment under Section 9.5.1.3, the Owner may, at its sole option, issue joint checks to the Contractor and to any Subcontractor or material or equipment suppliers to whom the Contractor failed to make payment for Work properly performed or material or equipment suitably delivered. If the Owner makes payments by joint check, the Owner shall notify the Engineer and the Engineer will reflect such payment on the next Certificate for Payment.

§ 9.6 PROGRESS PAYMENTS

§ 9.6.1 After the Engineer has issued a Certificate for Payment, the Owner shall make payment in the manner and within the time provided in the Contract Documents, and shall so notify the Engineer.

§ 9.6.2 The Contractor shall pay each Subcontractor no later than seven days after receipt of payment from the Owner the amount to which the Subcontractor is entitled, reflecting percentages actually retained from payments to the Contractor on account of the Subcontractor's portion of the Work. The Contractor shall, by appropriate agreement with each Subcontractor, require each Subcontractor to make payments to Sub-subcontractors in a similar manner.

§ 9.6.3 The Engineer will, on request, furnish to a Subcontractor, if practicable, information regarding percentages of completion or amounts applied for by the Contractor and action taken thereon by the Engineer and Owner on account of portions of the Work done by such Subcontractor.

§ 9.6.4 The Owner has the right to request written evidence from the Contractor that the Contractor has properly paid Subcontractors and material and equipment suppliers amounts paid by the Owner to the Contractor for subcontracted Work. If the Contractor fails to furnish such evidence within seven days, the Owner shall have the right to contact Subcontractors to ascertain whether they have been properly paid. Neither the Owner nor Engineer

AIA Document A201™ – 2007. Copyright © 1911, 1915, 1918, 1925, 1937, 1951, 1958, 1961, 1963, 1966, 1970, 1976, 1987, 1997 and 2007 by The American Institute of Architects. **All rights reserved.** WARNING: This AIA® Document is protected by U.S. Copyright Law and International Treaties. Unauthorized reproduction or distribution of this AIA® Document, or any portion of it, may result in severe civil and criminal penalties, and will be prosecuted to the maximum extent possible under the law. This document was produced by AIA software at 13:50:02 on 02/19/2015 under Order No.2014561723_1 which expires on 02/09/2016, and is not for resale.
User Notes:

shall have an obligation to pay or to see to the payment of money to a Subcontractor, except as may otherwise be required by law.

§ 9.6.5 Contractor payments to material and equipment suppliers shall be treated in a manner similar to that provided in Sections 9.6.2, 9.6.3 and 9.6.4.

§ 9.6.6 A Certificate for Payment, a progress payment, or partial or entire use or occupancy of the Project by the Owner shall not constitute acceptance of Work not in accordance with the Contract Documents.

§ 9.6.7 Unless the Contractor provides the Owner with a payment bond in the full penal sum of the Contract Sum, payments received by the Contractor for Work properly performed by Subcontractors and suppliers shall be held by the Contractor for those Subcontractors or suppliers who performed Work or furnished materials, or both, under contract with the Contractor for which payment was made by the Owner. Nothing contained herein shall require money to be placed in a separate account and not commingled with money of the Contractor, shall create any fiduciary liability or tort liability on the part of the Contractor for breach of trust or shall entitle any person or entity to an award of punitive damages against the Contractor for breach of the requirements of this provision.

§ 9.7 FAILURE OF PAYMENT

If the Engineer does not issue a Certificate for Payment, through no fault of the Contractor, within seven days after receipt of the Contractor's Application for Payment, or if the Owner does not pay the Contractor within the time frame established in the Contract Documents the amount certified by the Engineer or awarded by binding dispute resolution, then the Contractor may, upon seven additional days' written notice to the Owner and Engineer, stop the Work until payment of the amount owing has been received. The Contract Time shall be extended appropriately and the Contract Sum shall be increased by the amount of the Contractor's reasonable costs of shut-down, delay and start-up, plus interest as provided for in the Contract Documents.

§ 9.8 SUBSTANTIAL COMPLETION

§ 9.8.1 Substantial Completion is the stage in the progress of the Work when the Work or designated portion thereof is sufficiently complete in accordance with the Contract Documents so that the Owner can occupy or utilize the Work for its intended use.

§ 9.8.2 When the Contractor considers that the Work, or a portion thereof which the Owner agrees to accept separately, is substantially complete, the Contractor shall prepare and submit to the Engineer a comprehensive list of items to be completed or corrected prior to final payment. Failure to include an item on such list does not alter the responsibility of the Contractor to complete all Work in accordance with the Contract Documents.

§ 9.8.3 Upon receipt of the Contractor's list, the Engineer will make an inspection to determine whether the Work or designated portion thereof is substantially complete. If the Engineer's inspection discloses any item, whether or not included on the Contractor's list, which is not sufficiently complete in accordance with the Contract Documents so that the Owner can occupy or utilize the Work or designated portion thereof for its intended use, the Contractor shall, before issuance of the Certificate of Substantial Completion, complete or correct such item upon notification by the Engineer. In such case, the Contractor shall then submit a request for another inspection by the Engineer to determine Substantial Completion.

§ 9.8.4 When the Work or designated portion thereof is substantially complete, the Engineer will prepare a Certificate of Substantial Completion that shall establish the date of Substantial Completion, shall establish responsibilities of the Owner and Contractor for security, maintenance, heat, utilities, damage to the Work and insurance, and shall fix the time within which the Contractor shall finish all items on the list accompanying the Certificate. Warranties required by the Contract Documents shall commence on the date of Substantial Completion of the Work or designated portion thereof unless otherwise provided in the Certificate of Substantial Completion.

§ 9.8.5 The Certificate of Substantial Completion shall be submitted to the Owner and Contractor for their written acceptance of responsibilities assigned to them in such Certificate. Upon such acceptance and consent of surety, if any, the Owner shall make payment of retainage applying to such Work or designated portion thereof. Such payment shall be adjusted for Work that is incomplete or not in accordance with the requirements of the Contract Documents.

AIA Document A201™ – 2007. Copyright © 1911, 1915, 1918, 1925, 1937, 1951, 1958, 1961, 1963, 1966, 1970, 1976, 1987, 1997 and 2007 by The American Institute of Architects. **All rights reserved.** WARNING: This AIA® Document is protected by U.S. Copyright Law and International Treaties. Unauthorized reproduction or distribution of this AIA® Document, or any portion of it, may result in severe civil and criminal penalties, and will be prosecuted to the maximum extent possible under the law. This document was produced by AIA software at 13:50:02 on 02/19/2015 under Order No.2014561723_1 which expires on 02/09/2016, and is not for resale.
User Notes: (1415799623)

§ 9.9 PARTIAL OCCUPANCY OR USE

§ 9.9.1 The Owner may occupy or use any completed or partially completed portion of the Work at any stage when such portion is designated by separate agreement with the Contractor, provided such occupancy or use is consented to by the insurer as required under Section 11.3.1.5 and authorized by public authorities having jurisdiction over the Project. Such partial occupancy or use may commence whether or not the portion is substantially complete, provided the Owner and Contractor have accepted in writing the responsibilities assigned to each of them for payments, , security, maintenance, heat, utilities, damage to the Work and insurance, and have agreed in writing concerning the period for correction of the Work and commencement of warranties required by the Contract Documents. When the Contractor considers a portion substantially complete, the Contractor shall prepare and submit a list to the Engineer as provided under Section 9.8.2. Consent of the Contractor to partial occupancy or use shall not be unreasonably withheld. The stage of the progress of the Work shall be determined by written agreement between the Owner and Contractor or, if no agreement is reached, by decision of the Engineer.

§ 9.9.2 Immediately prior to such partial occupancy or use, the Owner, Contractor and Engineer shall jointly inspect the area to be occupied or portion of the Work to be used in order to determine and record the condition of the Work.

§ 9.9.3 Unless otherwise agreed upon, partial occupancy or use of a portion or portions of the Work shall not constitute acceptance of Work not complying with the requirements of the Contract Documents.

§ 9.10 FINAL COMPLETION AND FINAL PAYMENT

§ 9.10.1 Upon receipt of the Contractor's written notice that the Work is ready for final inspection and acceptance and upon receipt of a final Application for Payment, the Engineer will promptly make such inspection and, when the Engineer finds the Work acceptable under the Contract Documents and the Contract fully performed, the Engineer will promptly issue a final Certificate for Payment stating that to the best of the Engineer's knowledge, information and belief, and on the basis of the Engineer's on-site visits and inspections, the Work has been completed in accordance with terms and conditions of the Contract Documents and that the entire balance found to be due the Contractor and noted in the final Certificate is due and payable. The Engineer's final Certificate for Payment will constitute a further representation that conditions listed in Section 9.10.2 as precedent to the Contractor's being entitled to final payment have been fulfilled.

(Paragraph deleted)

§ 9.10. Final payment shall not become due until the Contractor submits to the Engineer (1) an affidavit that payrolls, bills for materials and equipment, and other indebtedness connected with the Work for which the Owner or the Owner's property might be responsible or encumbered (less amounts withheld by Owner) have been paid or otherwise satisfied, (2) a certificate evidencing that insurance required by the Contract Documents to remain in force after final payment is currently in effect and will not be canceled or allowed to expire until at least 30 days' prior written notice has been given to the Owner, (3) a written statement that the Contractor knows of no substantial reason that the insurance will not be renewable to cover the period required by the Contract Documents, (4) consent of surety, if any, to final payment and (5), if required by the Owner, other data establishing payment or satisfaction of obligations, such as receipts, releases and waivers of liens, claims, security interests or encumbrances arising out of the Contract, to the extent and in such form as may be designated by the Owner. If a Subcontractor refuses to furnish a release or waiver required by the Owner, the Contractor may furnish a bond satisfactory to the Owner to indemnify the Owner against such lien. If such lien remains unsatisfied after payments are made, the Contractor shall refund to the Owner all money that the Owner may be compelled to pay in discharging such lien, including all costs and reasonable attorneys' fees.

§ 9.10.3 If, after Substantial Completion of the Work, final completion thereof is materially delayed through no fault of the Contractor or by issuance of Change Orders affecting final completion, and the Engineer so confirms, the Owner shall, upon application by the Contractor and certification by the Engineer, and without terminating the Contract, make payment of the balance due for that portion of the Work fully completed and accepted. If the remaining balance for Work not fully completed or corrected is less than any retainage stipulated in the Contract Documents, and if bonds have been furnished, the written consent of surety to payment of the balance due for that portion of the Work fully completed and accepted shall be submitted by the Contractor to the Engineer prior to certification of such payment. Such payment shall be made under terms and conditions governing final payment, except that it shall not constitute a waiver of claims.

AIA Document A201™ – 2007. Copyright © 1911, 1915, 1918, 1925, 1937, 1951, 1958, 1961, 1963, 1966, 1970, 1976, 1987, 1997 and 2007 by The American Institute of Architects. **All rights reserved.** WARNING: This AIA® Document is protected by U.S. Copyright Law and International Treaties. Unauthorized reproduction or distribution of this AIA® Document, or any portion of it, may result in severe civil and criminal penalties, and will be prosecuted to the maximum extent possible under the law. This document was produced by AIA software at 13:50:02 on 02/19/2015 under Order No.2014561723_1 which expires on 02/09/2016, and is not for resale.
User Notes:

(1415799623)

§ 9.10.4 The making of final payment shall constitute a waiver of Claims by the Owner except those arising from

- .1 liens, Claims, security interests or encumbrances arising out of the Contract and unsettled;
- .2 failure of the Work to comply with the requirements of the Contract Documents; or
- .3 terms of special warranties required by the Contract Documents.

§ 9.10.5 Acceptance of final payment by the Contractor, a Subcontractor or material supplier shall constitute a waiver of claims by that payee except those previously made in writing and identified by that payee as unsettled at the time of final Application for Payment.

ARTICLE 10 PROTECTION OF PERSONS AND PROPERTY

§ 10.1 SAFETY PRECAUTIONS AND PROGRAMS

The Contractor shall be responsible for initiating, maintaining and supervising all safety precautions and programs in connection with the performance of the Contract.

§ 10.2 SAFETY OF PERSONS AND PROPERTY

§ 10.2.1 The Contractor shall take reasonable precautions for safety of, and shall provide reasonable protection to prevent damage, injury or loss to

- .1 employees on the Work and other persons who may be affected thereby;
- .2 the Work and materials and equipment to be incorporated therein, whether in storage on or off the site, under care, custody or control of the Contractor or the Contractor's Subcontractors or Sub-subcontractors; and
- .3 other property at the site or adjacent thereto, such as trees, shrubs, lawns, walks, pavements, roadways, structures and utilities not designated for removal, relocation or replacement in the course of construction.

§ 10.2.2 The Contractor shall comply with and give notices required by applicable laws, statutes, ordinances, codes, rules and regulations, and lawful orders of public authorities bearing on safety of persons or property or their protection from damage, injury or loss.

§ 10.2.3 The Contractor shall erect and maintain, as required by existing conditions and performance of the Contract, reasonable safeguards for safety and protection, including posting danger signs and other warnings against hazards, promulgating safety regulations and notifying owners and users of adjacent sites and utilities.

§ 10.2.4 When use or storage of explosives or other hazardous materials or equipment or unusual methods are necessary for execution of the Work, the Contractor shall exercise utmost care and carry on such activities under supervision of properly qualified personnel.

§ 10.2.5 The Contractor shall promptly remedy damage and loss (other than damage or loss insured under property insurance required by the Contract Documents) to property referred to in Sections 10.2.1.2 and 10.2.1.3 caused in whole or in part by the Contractor, a Subcontractor, a Sub-subcontractor, or anyone directly or indirectly employed by any of them, or by anyone for whose acts they may be liable and for which the Contractor is responsible under Sections 10.2.1.2 and 10.2.1.3, except damage or loss attributable to acts or omissions of the Owner or Engineer or anyone directly or indirectly employed by either of them, or by anyone for whose acts either of them may be liable, and not attributable to the fault or negligence of the Contractor. The foregoing obligations of the Contractor are in addition to the Contractor's obligations under Section 3.18.

§ 10.2.6 The Contractor shall designate a responsible member of the Contractor's organization at the site whose duty shall be the prevention of accidents. This person shall be the Contractor's superintendent unless otherwise designated by the Contractor in writing to the Owner and Engineer.

§ 10.2.7 The Contractor shall not permit any part of the construction or site to be loaded so as to cause damage or create an unsafe condition.

§ 10.2.8 INJURY OR DAMAGE TO PERSON OR PROPERTY

If either party suffers injury or damage to person or property because of an act or omission of the other party, or of others for whose acts such party is legally responsible, written notice of such injury or damage, whether or not

AIA Document A201™ – 2007. Copyright © 1911, 1915, 1918, 1925, 1937, 1951, 1958, 1961, 1963, 1966, 1970, 1976, 1987, 1997 and 2007 by The American Institute of Architects. **All rights reserved.** WARNING: This AIA® Document is protected by U.S. Copyright Law and International Treaties. Unauthorized reproduction or distribution of this AIA® Document, or any portion of it, may result in severe civil and criminal penalties, and will be prosecuted to the maximum extent possible under the law. This document was produced by AIA software at 13:50:02 on 02/19/2015 under Order No.2014561723_1 which expires on 02/09/2016, and is not for resale.
User Notes:

insured, shall be given to the other party within a reasonable time not exceeding 21 days after discovery. The notice shall provide sufficient detail to enable the other party to investigate the matter.

§ 10.3 HAZARDOUS MATERIALS

§ 10.3.1 The Contractor is responsible for compliance with any requirements included in the Contract Documents regarding hazardous materials. If the Contractor encounters a hazardous material or substance not addressed in the Contract Documents and if reasonable precautions will be inadequate to prevent foreseeable bodily injury or death to persons resulting from a material or substance, including but not limited to asbestos or polychlorinated biphenyl (PCB), encountered on the site by the Contractor, the Contractor shall, upon recognizing the condition, immediately stop Work in the affected area and report the condition to the Owner and Engineer in writing.

§ 10.3.2 Upon receipt of the Contractor's written notice, the Owner shall obtain the services of a licensed laboratory to verify the presence or absence of the material or substance reported by the Contractor and, in the event such material or substance is found to be present, to cause it to be rendered harmless. Unless otherwise required by the Contract Documents, the Owner shall furnish in writing to the Contractor and Engineer the names and qualifications of persons or entities who are to perform tests verifying the presence or absence of such material or substance or who are to perform the task of removal or safe containment of such material or substance. The Contractor and the Engineer will promptly reply to the Owner in writing stating whether or not either has reasonable objection to the persons or entities proposed by the Owner. If either the Contractor or Engineer has an objection to a person or entity proposed by the Owner, the Owner shall propose another to whom the Contractor and the Engineer have no reasonable objection. When the material or substance has been rendered harmless, Work in the affected area shall resume upon written agreement of the Owner and Contractor. By Change Order, the Contract Time shall be extended appropriately and the Contract Sum shall be increased in the amount of the Contractor's reasonable additional costs of shut-down, delay and start-up.

§ 10.3.3 To the fullest extent permitted by law, the Owner shall indemnify and hold harmless the Contractor, Subcontractors, Engineer, Engineer's consultants and agents and employees of any of them from and against claims, damages, losses and expenses, including but not limited to attorneys' fees, arising out of or resulting from performance of the Work in the affected area if in fact the material or substance presents the risk of bodily injury or death as described in Section 10.3.1 and has not been rendered harmless, provided that such claim, damage, loss or expense is attributable to bodily injury, sickness, disease or death, or to injury to or destruction of tangible property (other than the Work itself), except to the extent that such damage, loss or expense is due to the fault or negligence of the party seeking indemnity.

§ 10.3.4 The Owner shall not be responsible under this Section 10.3 for materials or substances the Contractor brings to the site unless such materials or substances are required by the Contract Documents. The Owner shall be responsible for materials or substances required by the Contract Documents, except to the extent of the Contractor's fault or negligence in the use and handling of such materials or substances.

§ 10.3.5 The Contractor shall indemnify the Owner for the cost and expense the Owner incurs (1) for remediation of a material or substance the Contractor brings to the site and negligently handles, or (2) where the Contractor fails to perform its obligations under Section 10.3.1, except to the extent that the cost and expense are due to the Owner's fault or negligence.

§ 10.3.6 If, without negligence on the part of the Contractor, the Contractor is held liable by a government agency for the cost of remediation of a hazardous material or substance solely by reason of performing Work as required by the Contract Documents, the Owner shall indemnify the Contractor for all cost and expense thereby incurred.

§ 10.4 EMERGENCIES

In an emergency affecting safety of persons or property, the Contractor shall act, at the Contractor's discretion, to prevent threatened damage, injury or loss. Additional compensation or extension of time claimed by the Contractor on account of an emergency shall be determined as provided in Article 15 and Article 7.

ARTICLE 11 INSURANCE AND BONDS

§ 11.1 CONTRACTOR'S LIABILITY INSURANCE

§ 11.1.1 The Contractor shall purchase from and maintain in a company or companies lawfully authorized to do business in the jurisdiction in which the Project is located such insurance as will protect the Contractor from claims

AIA Document A201™ – 2007. Copyright © 1911, 1915, 1918, 1925, 1937, 1951, 1958, 1961, 1963, 1966, 1970, 1976, 1987, 1997 and 2007 by The American Institute of Architects. **All rights reserved.** WARNING: This AIA® Document is protected by U.S. Copyright Law and International Treaties. Unauthorized reproduction or distribution of this AIA® Document, or any portion of it, may result in severe civil and criminal penalties, and will be prosecuted to the maximum extent possible under the law. This document was produced by AIA software at 13:50:02 on 02/19/2015 under Order No.2014561723_1 which expires on 02/09/2016, and is not for resale.
User Notes: (1415799623)

set forth below which may arise out of or result from the Contractor's operations and completed operations under the Contract and for which the Contractor may be legally liable, whether such operations be by the Contractor or by a Subcontractor or by anyone directly or indirectly employed by any of them, or by anyone for whose acts any of them may be liable:

.1 Claims under workers' compensation, disability benefit and other similar employee benefit acts that are applicable to the Work to be performed;
.2 Claims for damages because of bodily injury, occupational sickness or disease, or death of the Contractor's employees;
.3 Claims for damages because of bodily injury, sickness or disease, or death of any person other than the Contractor's employees;
.4 Claims for damages insured by usual personal injury liability coverage;
.5 Claims for damages, other than to the Work itself, because of injury to or destruction of tangible property, including loss of use resulting therefrom;
.6 Claims for damages because of bodily injury, death of a person or property damage arising out of ownership, maintenance or use of a motor vehicle;
.7 Claims for bodily injury or property damage arising out of completed operations; and
.8 Claims involving contractual liability insurance applicable to the Contractor's obligations under Section 3.18.

§ 11.1.2 The insurance required by Section 11.1.1 shall be written for not less than limits of liability specified in the Contract Documents or required by law, whichever coverage is greater. Coverages, whether written on an occurrence or claims-made basis, shall be maintained without interruption from the date of commencement of the Work until the date of final payment and termination of any coverage required to be maintained after final payment, and, with respect to the Contractor's completed operations coverage, until the expiration of the period for correction of Work or for such other period for maintenance of completed operations coverage as specified in the Contract Documents.

§ 11.1.3 Certificates of insurance acceptable to the Owner shall be filed with the Owner prior to commencement of the Work and thereafter upon renewal or replacement of each required policy of insurance. These certificates and the insurance policies required by this Section 11.1 shall contain a provision that coverages afforded under the policies will not be canceled or allowed to expire until at least 30 days' prior written notice has been given to the Owner. An additional certificate evidencing continuation of liability coverage, including coverage for completed operations, shall be submitted with the final Application for Payment as required by Section 9.10.2 and thereafter upon renewal or replacement of such coverage until the expiration of the time required by Section 11.1.2. Information concerning reduction of coverage on account of revised limits or claims paid under the General Aggregate, or both, shall be furnished by the Contractor with reasonable promptness.

§ 11.1.4 The Contractor shall cause the commercial liability coverage required by the Contract Documents to include (1) the Owner, the Engineer and the Engineer's consultants as additional insureds for claims caused in whole or in part by the Contractor's negligent acts or omissions during the Contractor's operations; and (2) the Owner as an additional insured for claims caused in whole or in part by the Contractor's negligent acts or omissions during the Contractor's completed operations.

§ 11.2 OWNER'S LIABILITY INSURANCE

The Owner shall be responsible for purchasing and maintaining the Owner's usual liability insurance.

§ 11.3 PERFORMANCE BOND AND PAYMENT BOND

§ 11.3.1 The Owner shall have the right to require the Contractor to furnish bonds covering faithful performance of the Contract and payment of obligations arising thereunder as stipulated in bidding requirements or specifically required in the Contract Documents on the date of execution of the Contract.

(Paragraphs deleted)

§ 11.3.2 Upon the request of any person or entity appearing to be a potential beneficiary of bonds covering payment of obligations arising under the Contract, the Contractor shall promptly furnish a copy of the bonds or shall authorize a copy to be furnished.

AIA Document A201™ – 2007. Copyright © 1911, 1915, 1918, 1925, 1937, 1951, 1958, 1961, 1963, 1966, 1970, 1976, 1987, 1997 and 2007 by The American Institute of Architects. **All rights reserved.** WARNING: This AIA® Document is protected by U.S. Copyright Law and International Treaties. Unauthorized reproduction or distribution of this AIA® Document, or any portion of it, may result in severe civil and criminal penalties, and will be prosecuted to the maximum extent possible under the law. This document was produced by AIA software at 13:50:02 on 02/19/2015 under Order No.2014561723_1 which expires on 02/09/2016, and is not for resale.
User Notes:

(Paragraphs deleted)

ARTICLE 12 UNCOVERING AND CORRECTION OF WORK

§ 12.1 UNCOVERING OF WORK

§ 12.1.1 If a portion of the Work is covered contrary to the Engineer's request or to requirements specifically expressed in the Contract Documents, it must, if requested in writing by the Engineer, be uncovered for the Engineer's examination and be replaced at the Contractor's expense without change in the Contract Time.

§ 12.1.2 If a portion of the Work has been covered that the Engineer has not specifically requested to examine prior to its being covered, the Engineer may request to see such Work and it shall be uncovered by the Contractor. If such Work is in accordance with the Contract Documents, costs of uncovering and replacement shall, by appropriate Change Order, be at the Owner's expense. If such Work is not in accordance with the Contract Documents, such costs and the cost of correction shall be at the Contractor's expense unless the condition was caused by the Owner or a separate contractor in which event the Owner shall be responsible for payment of such costs.

§ 12.2 CORRECTION OF WORK

§ 12.2.1 BEFORE OR AFTER SUBSTANTIAL COMPLETION

The Contractor shall promptly correct Work rejected by the Engineer or failing to conform to the requirements of the Contract Documents, whether discovered before or after Substantial Completion and whether or not fabricated, installed or completed. Costs of correcting such rejected Work, including additional testing and inspections, the cost of uncovering and replacement, and compensation for the Engineer's services and expenses made necessary thereby, shall be at the Contractor's expense.

§ 12.2.2 AFTER SUBSTANTIAL COMPLETION

§ 12.2.2.1 In addition to the Contractor's obligations under Section 3.5, if, within one year after the date of Substantial Completion of the Work or designated portion thereof or after the date for commencement of warranties established under Section 9.9.1, or by terms of an applicable special warranty required by the Contract Documents, any of the Work is found to be not in accordance with the requirements of the Contract Documents, the Contractor shall correct it promptly after receipt of written notice from the Owner to do so unless the Owner has previously given the Contractor a written acceptance of such condition. The Owner shall give such notice promptly after discovery of the condition. During the one-year period for correction of Work, if the Owner fails to notify the Contractor and give the Contractor an opportunity to make the correction, the Owner waives the rights to require correction by the Contractor and to make a claim for breach of warranty. If the Contractor fails to correct nonconforming Work within a reasonable time during that period after receipt of notice from the Owner or Engineer, the Owner may correct it in accordance with Section 2.4.

§ 12.2.2.2 The one-year period for correction of Work shall be extended with respect to portions of Work first performed after Substantial Completion by the period of time between Substantial Completion and the actual completion of that portion of the Work.

§ 12.2.2.3 The one-year period for correction of Work shall not be extended by corrective Work performed by the Contractor pursuant to this Section 12.2.

§ 12.2.3 The Contractor shall remove from the site portions of the Work that are not in accordance with the requirements of the Contract Documents and are neither corrected by the Contractor nor accepted by the Owner.

§ 12.2.4 The Contractor shall bear the cost of correcting destroyed or damaged construction, whether completed or partially completed, of the Owner or separate contractors caused by the Contractor's correction or removal of Work that is not in accordance with the requirements of the Contract Documents.

§ 12.2.5 Nothing contained in this Section 12.2 shall be construed to establish a period of limitation with respect to other obligations the Contractor has under the Contract Documents. Establishment of the one-year period for correction of Work as described in Section 12.2.2 relates only to the specific obligation of the Contractor to correct the Work, and has no relationship to the time within which the obligation to comply with the Contract Documents may be sought to be enforced, nor to the time within which proceedings may be commenced to establish the Contractor's liability with respect to the Contractor's obligations other than specifically to correct the Work.

AIA Document A201™ – 2007. Copyright © 1911, 1915, 1918, 1925, 1937, 1951, 1958, 1961, 1963, 1966, 1970, 1976, 1987, 1997 and 2007 by The American Institute of Architects. **All rights reserved.** WARNING: This AIA® Document is protected by U.S. Copyright Law and International Treaties. Unauthorized reproduction or distribution of this AIA® Document, or any portion of it, may result in severe civil and criminal penalties, and will be prosecuted to the maximum extent possible under the law. This document was produced by AIA software at 13:50:02 on 02/19/2015 under Order No.2014561723_1 which expires on 02/09/2016, and is not for resale.
User Notes:

§ 12.3 ACCEPTANCE OF NONCONFORMING WORK

If the Owner prefers to accept Work that is not in accordance with the requirements of the Contract Documents, the Owner may do so instead of requiring its removal and correction, in which case the Contract Sum will be reduced as appropriate and equitable. Such adjustment shall be effected whether or not final payment has been made.

ARTICLE 13 MISCELLANEOUS PROVISIONS

§ 13.1 GOVERNING LAW

The Contract shall be governed by the law of the place where the Project is located except that, if the parties have selected arbitration as the method of binding dispute resolution, the Federal Arbitration Act shall govern Section 15.4.

§ 13.2 SUCCESSORS AND ASSIGNS

§ 13.2.1 The Owner and Contractor respectively bind themselves, their partners, successors, assigns and legal representatives to covenants, agreements and obligations contained in the Contract Documents. Except as provided in Section 13.2.2, neither party to the Contract shall assign the Contract as a whole without written consent of the other. If either party attempts to make such an assignment without such consent, that party shall nevertheless remain legally responsible for all obligations under the Contract.

§ 13.2.2 The Owner may, without consent of the Contractor, assign the Contract to a lender providing construction financing for the Project, if the lender assumes the Owner's rights and obligations under the Contract Documents. The Contractor shall execute all consents reasonably required to facilitate such assignment.

§ 13.3 WRITTEN NOTICE

Written notice shall be deemed to have been duly served if delivered in person to the individual, to a member of the firm or entity, or to an officer of the corporation for which it was intended; or if delivered at, or sent by registered or certified mail or by courier service providing proof of delivery to, the last business address known to the party giving notice.

§ 13.4 RIGHTS AND REMEDIES

§ 13.4.1 Duties and obligations imposed by the Contract Documents and rights and remedies available thereunder shall be in addition to and not a limitation of duties, obligations, rights and remedies otherwise imposed or available by law.

§ 13.4.2 No action or failure to act by the Owner, Engineer or Contractor shall constitute a waiver of a right or duty afforded them under the Contract, nor shall such action or failure to act constitute approval of or acquiescence in a breach there under, except as may be specifically agreed in writing.

§ 13.5 TESTS AND INSPECTIONS

§ 13.5.1 Tests, inspections and approvals of portions of the Work shall be made as required by the Contract Documents and by applicable laws, statutes, ordinances, codes, rules and regulations or lawful orders of public authorities. Unless otherwise provided, the Contractor shall make arrangements for such tests, inspections and approvals with an independent testing laboratory or entity acceptable to the Owner, or with the appropriate public authority, and shall bear all related costs of tests, inspections and approvals. The Contractor shall give the Engineer timely notice of when and where tests and inspections are to be made so that the Engineer may be present for such procedures. The Owner shall bear costs of (1) tests, inspections or approvals that do not become requirements until after bids are received or negotiations concluded, and (2) tests, inspections or approvals where building codes or applicable laws or regulations prohibit the Owner from delegating their cost to the Contractor.

§ 13.5.2 If the Engineer, Owner or public authorities having jurisdiction determine that portions of the Work require additional testing, inspection or approval not included under Section 13.5.1, the Engineer will, upon written authorization from the Owner, instruct the Contractor to make arrangements for such additional testing, inspection or approval by an entity acceptable to the Owner, and the Contractor shall give timely notice to the Engineer of when and where tests and inspections are to be made so that the Engineer may be present for such procedures. Such costs, except as provided in Section 13.5.3, shall be at the Owner's expense.

§ 13.5.3 If such procedures for testing, inspection or approval under Sections 13.5.1 and 13.5.2 reveal failure of the portions of the Work to comply with requirements established by the Contract Documents, all costs made necessary

AIA Document A201™ – 2007. Copyright © 1911, 1915, 1918, 1925, 1937, 1951, 1958, 1961, 1963, 1966, 1970, 1976, 1987, 1997 and 2007 by The American Institute of Architects. **All rights reserved.** WARNING: This AIA® Document is protected by U.S. Copyright Law and International Treaties. Unauthorized reproduction or distribution of this AIA® Document, or any portion of it, may result in severe civil and criminal penalties, and will be prosecuted to the maximum extent possible under the law. This document was produced by AIA software at 13:50:02 on 02/19/2015 under Order No.2014561723_1 which expires on 02/09/2016, and is not for resale.
User Notes:

(1415799623)

by such failure including those of repeated procedures and compensation for the Engineer's services and expenses shall be at the Contractor's expense.

§ 13.5.4 Required certificates of testing, inspection or approval shall, unless otherwise required by the Contract Documents, be secured by the Contractor and promptly delivered to the Engineer.

§ 13.5.5 If the Engineer is to observe tests, inspections or approvals required by the Contract Documents, the Engineer will do so promptly and, where practicable, at the normal place of testing.

§ 13.5.6 Tests or inspections conducted pursuant to the Contract Documents shall be made promptly to avoid unreasonable delay in the Work.

(Paragraphs deleted)

§ 13.7 TIME LIMITS ON CLAIMS

The Owner and Contractor shall commence all claims and causes of action, whether in contract, tort, breach of warranty or otherwise, against the other arising out of or related to the Contract in accordance with the requirements of the final dispute resolution method selected in the Agreement within the time period specified by applicable law, but in any case not more than 10 years after the date of Substantial Completion of the Work. The Owner and Contractor waive all claims and causes of action not commenced in accordance with this Section 13.7.

ARTICLE 14 TERMINATION OR SUSPENSION OF THE CONTRACT

§ 14.1 TERMINATION BY THE CONTRACTOR

§ 14.1.1 The Contractor may terminate the Contract if the Work is stopped for a period of 30 consecutive days through no act or fault of the Contractor or a Subcontractor, Sub-subcontractor or their agents or employees or any other persons or entities performing portions of the Work under direct or indirect contract with the Contractor, for any of the following reasons:

- .1 Issuance of an order of a court or other public authority having jurisdiction that requires all Work to be stopped;
- .2 An act of government, such as a declaration of national emergency that requires all Work to be stopped;
- .3 Because the Engineer has not issued a Certificate for Payment and has not notified the Contractor of the reason for withholding certification as provided in Section 9.4.1, or because the Owner has not made payment on a Certificate for Payment within the time stated in the Contract Documents; or
- .4 The Owner has failed to furnish to the Contractor promptly, upon the Contractor's request, reasonable evidence as required by Section 2.2.1.

§ 14.1.2 The Contractor may terminate the Contract if, through no act or fault of the Contractor or a Subcontractor, Sub-subcontractor or their agents or employees or any other persons or entities performing portions of the Work under direct or indirect contract with the Contractor, repeated suspensions, delays or interruptions of the entire Work by the Owner as described in Section 14.3 constitute in the aggregate more than 100 percent of the total number of days scheduled for completion, or 120 days in any 365-day period, whichever is less.

§ 14.1.3 If one of the reasons described in Section 14.1.1 or 14.1.2 exists, the Contractor may, upon seven days' written notice to the Owner and Engineer, terminate the Contract and recover from the Owner payment for Work executed, including reasonable overhead and profit, costs incurred by reason of such termination, and damages.

§ 14.1.4 If the Work is stopped for a period of 60 consecutive days through no act or fault of the Contractor or a Subcontractor or their agents or employees or any other persons performing portions of the Work under contract with the Contractor because the Owner has repeatedly failed to fulfill the Owner's obligations under the Contract Documents with respect to matters important to the progress of the Work, the Contractor may, upon seven additional days' written notice to the Owner and the Engineer, terminate the Contract and recover from the Owner as provided in Section 14.1.3.

§ 14.2 TERMINATION BY THE OWNER FOR CAUSE

§ 14.2.1 The Owner may terminate the Contract if the Contractor

- .1 repeatedly refuses or fails to supply enough properly skilled workers or proper materials;

AIA Document A201™ – 2007. Copyright © 1911, 1915, 1918, 1925, 1937, 1951, 1958, 1961, 1963, 1966, 1970, 1976, 1987, 1997 and 2007 by The American Institute of Architects. **All rights reserved.** WARNING: This AIA® Document is protected by U.S. Copyright Law and International Treaties. Unauthorized reproduction or distribution of this AIA® Document, or any portion of it, may result in severe civil and criminal penalties, and will be prosecuted to the maximum extent possible under the law. This document was produced by AIA software at 13:50:02 on 02/19/2015 under Order No.2014561723_1 which expires on 02/09/2016, and is not for resale.
User Notes:

.2 fails to make payment to Subcontractors for materials or labor in accordance with the respective agreements between the Contractor and the Subcontractors;
.3 repeatedly disregards applicable laws, statutes, ordinances, codes, rules and regulations, or lawful orders of a public authority; or
.4 otherwise is guilty of substantial breach of a provision of the Contract Documents.

§ 14.2.2 When any of the above reasons exist, the Owner, upon certification by the Initial Decision Maker that sufficient cause exists to justify such action, may without prejudice to any other rights or remedies of the Owner and after giving the Contractor and the Contractor's surety, if any, seven days' written notice, terminate employment of the Contractor and may, subject to any prior rights of the surety:

.1 Exclude the Contractor from the site and take possession of all materials, equipment, tools, and construction equipment and machinery thereon owned by the Contractor;
.2 Accept assignment of subcontracts pursuant to Section 5.4; and
.3 Finish the Work by whatever reasonable method the Owner may deem expedient. Upon written request of the Contractor, the Owner shall furnish to the Contractor a detailed accounting of the costs incurred by the Owner in finishing the Work.

§ 14.2.3 When the Owner terminates the Contract for one of the reasons stated in Section 14.2.1, the Contractor shall not be entitled to receive further payment until the Work is finished.

§ 14.2.4 If the unpaid balance of the Contract Sum exceeds costs of finishing the Work, including compensation for the Engineer's services and expenses made necessary thereby, and other damages incurred by the Owner and not expressly waived, such excess shall be paid to the Contractor. If such costs and damages exceed the unpaid balance, the Contractor shall pay the difference to the Owner. The amount to be paid to the Contractor or Owner, as the case may be, shall be certified by the Initial Decision Maker, upon application, and this obligation for payment shall survive termination of the Contract.

§ 14.3 SUSPENSION BY THE OWNER FOR CONVENIENCE

§ 14.3.1 The Owner may, without cause, order the Contractor in writing to suspend, delay or interrupt the Work in whole or in part for such period of time as the Owner may determine.

§ 14.3.2 The Contract Sum and Contract Time shall be adjusted for increases in the cost and time caused by suspension, delay or interruption as described in Section 14.3.1. Adjustment of the Contract Sum shall include profit. No adjustment shall be made to the extent

.1 that performance is, was or would have been so suspended, delayed or interrupted by another cause for which the Contractor is responsible; or
.2 that an equitable adjustment is made or denied under another provision of the Contract.

§ 14.4 TERMINATION BY THE OWNER FOR CONVENIENCE

§ 14.4.1 The Owner may, at any time, terminate the Contract for the Owner's convenience and without cause.

§ 14.4.2 Upon receipt of written notice from the Owner of such termination for the Owner's convenience, the Contractor shall

.1 cease operations as directed by the Owner in the notice;
.2 take actions necessary, or that the Owner may direct, for the protection and preservation of the Work; and
.3 except for Work directed to be performed prior to the effective date of termination stated in the notice, terminate all existing subcontracts and purchase orders and enter into no further subcontracts and purchase orders.

§ 14.4.3 In case of such termination for the Owner's convenience, the Contractor shall be entitled to receive payment for Work executed, and costs incurred by reason of such termination, along with reasonable overhead and profit on the Work not executed.

AIA Document A201™ – 2007. Copyright © 1911, 1915, 1918, 1925, 1937, 1951, 1958, 1961, 1963, 1966, 1970, 1976, 1987, 1997 and 2007 by The American Institute of Architects. **All rights reserved.** WARNING: This AIA® Document is protected by U.S. Copyright Law and International Treaties. Unauthorized reproduction or distribution of this AIA® Document, or any portion of it, may result in severe civil and criminal penalties, and will be prosecuted to the maximum extent possible under the law. This document was produced by AIA software at 13:50:02 on 02/19/2015 under Order No.2014561723_1 which expires on 02/09/2016, and is not for resale.
User Notes: (1415799623)

ARTICLE 15 CLAIMS AND DISPUTES

§ 15.1 CLAIMS

§ 15.1.1 DEFINITION

A Claim is a demand or assertion by one of the parties seeking, as a matter of right, payment of money, or other relief with respect to the terms of the Contract. The term "Claim" also includes other disputes and matters in question between the Owner and Contractor arising out of or relating to the Contract. The responsibility to substantiate Claims shall rest with the party making the Claim.

§ 15.1.2 NOTICE OF CLAIMS

Claims by either the Owner or Contractor must be initiated by written notice to the other party and to the Initial Decision Maker with a copy sent to the Engineer, if the Engineer is not serving as the Initial Decision Maker. Claims by either party must be initiated within 21 days after occurrence of the event giving rise to such Claim or within 21 days after the claimant first recognizes the condition giving rise to the Claim, whichever is later.

§ 15.1.3 CONTINUING CONTRACT PERFORMANCE

Pending final resolution of a Claim, except as otherwise agreed in writing or as provided in Section 9.7 and Article 14, the Contractor shall proceed diligently with performance of the Contract and the Owner shall continue to make payments in accordance with the Contract Documents. The Engineer will prepare Change Orders and issue Certificates for Payment in accordance with the decisions of the Initial Decision Maker.

§ 15.1.4 CLAIMS FOR ADDITIONAL COST

If the Contractor wishes to make a Claim for an increase in the Contract Sum, written notice as provided herein shall be given before proceeding to execute the Work. Prior notice is not required for Claims relating to an emergency endangering life or property arising under Section 10.4.

§ 15.1.5 CLAIMS FOR ADDITIONAL TIME

§ 15.1.5.1 If the Contractor wishes to make a Claim for an increase in the Contract Time, written notice as provided herein shall be given. The Contractor's Claim shall include an estimate of cost and of probable effect of delay on progress of the Work. In the case of a continuing delay, only one Claim is necessary.

§ 15.1.5.2 If adverse weather conditions are the basis for a Claim for additional time, such Claim shall be documented by data substantiating that weather conditions were abnormal for the period of time, could not have been reasonably anticipated and had an adverse effect on the scheduled construction.

§ 15.1.6 CLAIMS FOR CONSEQUENTIAL DAMAGES

The Contractor and Owner waive Claims against each other for consequential damages arising out of or relating to this Contract. This mutual waiver includes

.1 damages incurred by the Owner for rental expenses, for losses of use, income, profit, financing, business and reputation, and for loss of management or employee productivity or of the services of such persons; and

.2 damages incurred by the Contractor for principal office expenses including the compensation of personnel stationed there, for losses of financing, business and reputation, and for loss of profit except anticipated profit arising directly from the Work.

This mutual waiver is applicable, without limitation, to all consequential damages due to either party's termination in accordance with Article 14. Nothing contained in this Section 15.1.6 shall be deemed to preclude an award of liquidated damages, when applicable, in accordance with the requirements of the Contract Documents.

§ 15.2 INITIAL DECISION

§ 15.2.1 Claims, excluding those arising under Sections 10.3, 10.4, 11.3.9, and 11.3.10, shall be referred to the Initial Decision Maker for initial decision. The City of Santa Fe will serve as the Initial Decision Maker, unless otherwise indicated in the Agreement. Except for those Claims excluded by this Section 15.2.1, an initial decision shall be required as a condition precedent to mediation of any Claim arising prior to the date final payment is due, unless 30 days have passed after the Claim has been referred to the Initial Decision Maker with no decision having been rendered. Unless the Initial Decision Maker and all affected parties agree, the Initial Decision Maker will not decide disputes between the Contractor and persons or entities other than the Owner.

AIA Document A201™ – 2007. Copyright © 1911, 1915, 1918, 1925, 1937, 1951, 1958, 1961, 1963, 1966, 1970, 1976, 1987, 1997 and 2007 by The American Institute of Architects. **All rights reserved.** WARNING: This AIA® Document is protected by U.S. Copyright Law and International Treaties. Unauthorized reproduction or distribution of this AIA® Document, or any portion of it, may result in severe civil and criminal penalties, and will be prosecuted to the maximum extent possible under the law. This document was produced by AIA software at 13:50:02 on 02/19/2015 under Order No.2014561723_1 which expires on 02/09/2016, and is not for resale.
User Notes: (1415799623)

§ 15.2.2 The Initial Decision Maker will review Claims and within ten days of the receipt of a Claim take one or more of the following actions: (1) request additional supporting data from the claimant or a response with supporting data from the other party, (2) reject the Claim in whole or in part, (3) approve the Claim, (4) suggest a compromise, or (5) advise the parties that the Initial Decision Maker is unable to resolve the Claim if the Initial Decision Maker lacks sufficient information to evaluate the merits of the Claim or if the Initial Decision Maker concludes that, in the Initial Decision Maker's sole discretion, it would be inappropriate for the Initial Decision Maker to resolve the Claim.

§ 15.2.3 In evaluating Claims, the Initial Decision Maker may, but shall not be obligated to, consult with or seek information from either party or from persons with special knowledge or expertise who may assist the Initial Decision Maker in rendering a decision. The Initial Decision Maker may request the Owner to authorize retention of such persons at the Owner's expense.

§ 15.2.4 If the Initial Decision Maker requests a party to provide a response to a Claim or to furnish additional supporting data, such party shall respond, within ten days after receipt of such request, and shall either (1) provide a response on the requested supporting data, (2) advise the Initial Decision Maker when the response or supporting data will be furnished or (3) advise the Initial Decision Maker that no supporting data will be furnished. Upon receipt of the response or supporting data, if any, the Initial Decision Maker will either reject or approve the Claim in whole or in part.

§ 15.2.5 The Initial Decision Maker will render an initial decision approving or rejecting the Claim, or indicating that the Initial Decision Maker is unable to resolve the Claim. This initial decision shall (1) be in writing; (2) state the reasons therefor; and (3) notify the parties and the Engineer, if the Engineer is not serving as the Initial Decision Maker, of any change in the Contract Sum or Contract Time or both. The initial decision shall be final and binding on the parties but subject to mediation and, if the parties fail to resolve their dispute through mediation, to binding dispute resolution.

§ 15.2.6 Either party may file for mediation of an initial decision at any time, subject to the terms of Section 15.2.6.1.

§ 15.2.6.1 Either party may, within 30 days from the date of an initial decision, demand in writing that the other party file for mediation within 60 days of the initial decision. If such a demand is made and the party receiving the demand fails to file for mediation within the time required, then both parties waive their rights to mediate or pursue binding dispute resolution proceedings with respect to the initial decision.

§ 15.2.7 In the event of a Claim against the Contractor, the Owner may, but is not obligated to, notify the surety, if any, of the nature and amount of the Claim. If the Claim relates to a possibility of a Contractor's default, the Owner may, but is not obligated to, notify the surety and request the surety's assistance in resolving the controversy.

§ 15.2.8 If a Claim relates to or is the subject of a mechanic's lien, the party asserting such Claim may proceed in accordance with applicable law to comply with the lien notice or filing deadlines.

§ 15.3 MEDIATION

§ 15.3.1 Claims, disputes, or other matters in controversy arising out of or related to the Contract except those waived as provided for in Sections 9.10.4, 9.10.5, and 15.1.6 shall be subject to mediation as a condition precedent to binding dispute resolution.

§ 15.3.2 The parties shall endeavor to resolve their Claims by mediation which, unless the parties mutually agree otherwise, shall be administered by the American Arbitration Association in accordance with its Construction Industry Mediation Procedures in effect on the date of the Agreement. A request for mediation shall be made in writing, delivered to the other party to the Contract, and filed with the person or entity administering the mediation. The request may be made concurrently with the filing of binding dispute resolution proceedings but, in such event, mediation shall proceed in advance of binding dispute resolution proceedings, which shall be stayed pending mediation for a period of 60 days from the date of filing, unless stayed for a longer period by agreement of the parties or court order. If an arbitration is stayed pursuant to this Section 15.3.2, the parties may nonetheless proceed to the selection of the arbitrator(s) and agree upon a schedule for later proceedings.

AIA Document A201™ – 2007. Copyright © 1911, 1915, 1918, 1925, 1937, 1951, 1958, 1961, 1963, 1966, 1970, 1976, 1987, 1997 and 2007 by The American Institute of Architects. **All rights reserved.** WARNING: This AIA® Document is protected by U.S. Copyright Law and International Treaties. Unauthorized reproduction or distribution of this AIA® Document, or any portion of it, may result in severe civil and criminal penalties, and will be prosecuted to the maximum extent possible under the law. This document was produced by AIA software at 13:50:02 on 02/19/2015 under Order No.2014561723_1 which expires on 02/09/2016, and is not for resale.
User Notes:

§ 15.3.3 The parties shall share the mediator's fee and any filing fees equally. The mediation shall be held in the place where the Project is located, unless another location is mutually agreed upon. Agreements reached in mediation shall be enforceable as settlement agreements in any court having jurisdiction thereof.

§ 15.4 ARBITRATION

§ 15.4.1 If the parties have selected arbitration as the method for binding dispute resolution in the Agreement, any Claim subject to, but not resolved by, mediation shall be subject to arbitration which, unless the parties mutually agree otherwise, shall be administered by the American Arbitration Association in accordance with its Construction Industry Arbitration Rules in effect on the date of the Agreement. A demand for arbitration shall be made in writing, delivered to the other party to the Contract, and filed with the person or entity administering the arbitration. The party filing a notice of demand for arbitration must assert in the demand all Claims then known to that party on which arbitration is permitted to be demanded.

§ 15.4.1.1 A demand for arbitration shall be made no earlier than concurrently with the filing of a request for mediation, but in no event shall it be made after the date when the institution of legal or equitable proceedings based on the Claim would be barred by the applicable statute of limitations. For statute of limitations purposes, receipt of a written demand for arbitration by the person or entity administering the arbitration shall constitute the institution of legal or equitable proceedings based on the Claim.

§ 15.4.2 The award rendered by the arbitrator or arbitrators shall be final, and judgment may be entered upon it in accordance with applicable law in any court having jurisdiction thereof.

§ 15.4.3 The foregoing agreement to arbitrate and other agreements to arbitrate with an additional person or entity duly consented to by parties to the Agreement shall be specifically enforceable under applicable law in any court having jurisdiction thereof.

§ 15.4.4 CONSOLIDATION OR JOINDER

§ 15.4.4.1 Either party, at its sole discretion, may consolidate an arbitration conducted under this Agreement with any other arbitration to which it is a party provided that (1) the arbitration agreement governing the other arbitration permits consolidation, (2) the arbitrations to be consolidated substantially involve common questions of law or fact, and (3) the arbitrations employ materially similar procedural rules and methods for selecting arbitrator(s).

§ 15.4.4.2 Either party, at its sole discretion, may include by joinder persons or entities substantially involved in a common question of law or fact whose presence is required if complete relief is to be accorded in arbitration, provided that the party sought to be joined consents in writing to such joinder. Consent to arbitration involving an additional person or entity shall not constitute consent to arbitration of any claim, dispute or other matter in question not described in the written consent.

§ 15.4.4.3 The Owner and Contractor grant to any person or entity made a party to an arbitration conducted under this Section 15.4, whether by joinder or consolidation, the same rights of joinder and consolidation as the Owner and Contractor under this Agreement.

AIA Document A201™ – 2007. Copyright © 1911, 1915, 1918, 1925, 1937, 1951, 1958, 1961, 1963, 1966, 1970, 1976, 1987, 1997 and 2007 by The American Institute of Architects. **All rights reserved.** WARNING: This AIA® Document is protected by U.S. Copyright Law and International Treaties. Unauthorized reproduction or distribution of this AIA® Document, or any portion of it, may result in severe civil and criminal penalties, and will be prosecuted to the maximum extent possible under the law. This document was produced by AIA software at 13:50:02 on 02/19/2015 under Order No.2014561723_1 which expires on 02/09/2016, and is not for resale.
User Notes:

(1415799623)

BONDS, CERTIFICATES AND NOTICES
(006100-6200)

(00 6101) BID BOND

(Insert AIA Document A310 with bid.)

(00 6113.13) PERFORMANCE BOND

(Insert copy of executed Performance Bond later.)

(00 6113.16) LABOR AND MATERIAL BOND

(Insert copy of executed Labor and Material Payment Bond later.)

(00 6216) CERTIFICATE OF LIABILITY INSURANCE

(Insert copy of project-specified Certificate of Liability Insurance later.)

(00 6217) WORKERS' COMPENSATION INSURANCE

(Insert copy of project-specified Workers' Compensation Insurance later.)

(00 6218) NOTICE TO PROCEED

SAMPLE

DATE
NAME
ADDRESS
CITY/STATE/ZIP

RE:

Dear:

"OFFICIAL NOTICE-TO-PROCEED"

On _____, the City Council awarded a Construction Contract to your firm for the above noted project.

This letter shall serve as official Notice-to-Proceed with the work described for this project in the Contract Documents and _____.

The award of the Contract is based on your Bid proposal dated _____, in the amount of $_____.

Based on the date of issuance of this notice, as starting date, _____, and the ( ) calendar day time limit, the entire work under this Contract shall be substantially completed by _____, after which time liquidated damages as outlined in the project specifications will apply.

At the Pre-Construction conference on _____, the City Contract Compliance Officer provided you with a Wage Rate Poster which you are to display on the job site. Please comply with the requirements for filing payroll statements with the State Labor Commission and the City Contract Compliance Officer.

Please acknowledge receipt of this notice and return signed copies to the Owner (City of Santa Fe, Public Works Department, Facilities Division).

Sincerely,

xc: Project/Book File

RECEIPT ACKNOWLEDGED:

_____
By:

_____
Date

GENERAL CONDITIONS OF THE CONTRACT
(00 7200)

In the case of conflicting requirements between the AIA General Conditions and these General Conditions, the most stringent requirement will apply.

(00 7213) GENERAL CONDITIONS

NOTICE

This document has been prepared by the Capital Improvements Program (CIP) and Contract Compliance staff of the City of Santa Fe for use in construction projects.

DOCUMENT - DIVISION 00 7213

GENERAL CONDITIONS OF THE CONTRACT FOR CONSTRUCTION

(THIS DOCUMENT HAS IMPORTANT LEGAL CONSEQUENCES;
CONSULTATION WITH AN ATTORNEY IS ENCOURAGED WITH
RESPECT TO ITS COMPLETION OR MODIFICATION.)

TABLE OF ARTICLES

1. CONTRACT DOCUMENTS
2. OWNER'S REPRESENTATIVE - FACILITIES DIVISION
3. OWNER
4. CONTRACTOR
5. SUBCONTRACTORS
6. WORK BY OWNER OR BY SEPARATE CONTRACTORS
7. MISCELLANEOUS PROVISIONS
8. TIME
9. PAYMENTS AND COMPLETION
10. PROTECTION OF PERSONS AND PROPERTY
11. INSURANCE
12. CHANGES IN THE WORK
13. UNCOVERING AND CORRECTION OF WORK
14. TERMINIATION OF THE CONTRACT
15. EQUAL OPPORTUNITY
16. MINIMUM WAGE RATES

ARTICLE 1

CONTRACT DOCUMENTS

1.1 DEFINITIONS

1.1.1 THE CONTRACT DOCUMENTS

The Contract Documents consist of the Owner-Contractor Agreement, the Conditions of the Contract (General, Supplementary, and Other Conditions), the Drawings, the Specifications, and all Addenda issued prior to and all Modifications issued after execution of the Contract. A Modification is (1) a written amendment to the Contract signed by both parties, (2) a Change Order, (3) a written interpretation issued by the Owner's Representative pursuant to Subparagraph 2.2.6, or (4) a written order for a minor change in the work issued by the Owner's Representative pursuant to Paragraph 12.4. The Contract Document do not include Bidding Documents such as the Advertisement or Invitation to Bid, the Instructions to Bidders, sample forms, the Contractor's Bid, or portions of Addenda relating to any of these, or any other documents, unless specifically enumerated in the Owner-Contractor Agreement.

1.1.2 THE CONTRACT

The Contract Documents form the Contract for Construction. This Contract represents the entire and integrated agreement between the parties hereto and supersedes all prior negations, representations, or agreements, either written or oral. The Contract may be amended or modified only by a Modification as defined in Subparagraph 1.1.1. The Contract Documents shall not be construed to create any contractual relationship of any kind between the Owner's Representative and the Contractor, but the Owner's Representative shall be entitled to performance of obligations intended for his benefit, and to enforcement thereof. Nothing contained in the Contract Documents shall create any contractual relationship between the Owner or the Owner's Representative and any Subcontractor or Sub-subcontractor.

1.1.3 THE WORK

The work comprises the design and completed construction required by the Contract Documents, and includes design specifications, and all labor necessary to produce such construction, and all materials and equipment incorporated or to be incorporated in such construction.

1.1.4 THE PROJECT

The Project is the total design and construction of which the work performed under the Contract Documents may be the whole or a part.

1.2 EXECUTION, CORRELATION AND INTENT

1.2.1 No fewer than two (2) copies of the Contract Documents shall be signed by the Owner and the Contractor. If either the Owner or the Contractor or both do not sign the Conditions of the Contract, Drawings, Specifications, or any of the other Contract Documents, the Owner's Representative shall identify such Documents.

1.2.2 By executing the Contract, the Contractor represents that he has visited the site, familiarized himself with the local conditions under which the work is to be performed, and correlated his observations with the requirements of the Contract Documents.

1.2.3 The intent of the Contract Documents is to include all items necessary for the proper execution and completion of the work. The Contract Documents are complementary, and what is required by any one shall be as binding as if required by all work not covered in the Contract Documents will not be required unless it is consistent therewith and is reasonably inferable therefrom as being necessary to produce the intended results. Words and abbreviations which have well-known technical or trade meanings are used in the Contract Documents in accordance with such recognized meanings. In the event of a conflict between the Contract Documents, the more stringent requirements shall govern.

1.2.4 The organization of the Specifications into divisions, sections and articles, and the arrangement of Drawings shall not control the Contractor in dividing the work among Subcontractors or in establishing the extent of work to be performed by any trade.

1.3 OWNERSHIP AND USE OF DOCUMENTS

1.3.1 All designs, drawings, specifications, notes, and other work developed in the performance of this Contract shall be and remain the sole property of the Owner and may be used on any other work without additional compensation to the Owner's Representative. With respect thereto, the Owner's Representative agrees not to asset any rights and not to establish any claims under the design patent of copyright laws.

ARTICLE 2

OWNER'S REPRESENTATIVE

2.1 DEFINITION

2.1.1 The Owner's Representative is the person or persons designated by the City of Santa Fe as the administrator responsible for overseeing the project, identified as such in the Owner-Contractor Agreement, and is referred to throughout the Contract Documents as if singular in number and masculine in gender. The term "Owner's Representative" means the Owner's Representative or another authorized representative.

2.2 ADMINISTRATION OF THE CONTRACT – FACILITIES DIVISION

2.2.1 The Owner's Representative will provide administration of the Contract as hereinafter described.

2.2.2 The Owner's Representative will be the Owner's Agent during construction and until final payment is due. The Owner's Representative will advise and consult with the Owner. The Owner's instructions to the Contractor shall be forwarded through the Owner's Representative. The Owner's Representative shall have the authority to act on behalf of the Owner only to the extent provided in the Contract Documents, unless otherwise modified by written instrument in accordance with Subparagraph 2.2.17.

2.2.3 The Owner's Representative shall submit to the Owner, for approval, a list of critical inspection points based upon the construction schedule furnished by the Contract (Paragraph 4.11.1). The Owner's Representative and his staff (including the on-site representative, if agreed upon) shall make weekly visits to the site(s) at those critical points and at other times as the Owner's Representative deems appropriate during the progress of the work. Additionally, the Owner's Representative shall familiarize himself with the progress and quality of the work and determine if the work is proceeding in accordance with the Contract Documents. On the basis of on-site observations, as the Owner's Representative, he shall guard the Owner against defects and deficiencies in the construction. Should the Owner's Representative determine that any portion of the work varies from the intent of the Contract Documents he shall immediately notify the Contractor and the Owner of the non-compliance and the nature of the work required to correct such non-compliance. The Owner's Representative shall recommend to the Owner, in writing, to issue a "stop work order" for any portion of the work that does not substantially comply with the intent of the Contract Documents, except as follows.

2.2.4 The Owner's Representative shall not be responsible for construction means, methods, techniques, sequences, or procedures, or for safety precautions and programs in connection with the work. Additionally, the Owner's Representative shall not be responsible for the Contractor's failure to carry out the work in accordance with the Contract Documents. The Owner's Representative shall reject work, which does not meet or exceed the standards established by the Contract Documents. Whenever, in his reasonable opinion, he considers it necessary or advisable to ensure the proper implementation of the intent of the Contract Documents, he will have authority to require special inspection or testing of any work in accordance with the provisions of the Contract Documents whether or not such work is then fabricated, installed or completed.

2.2.5 The Owner's Representative shall at all times have access to the work wherever it is in preparation and progress. The Contractor shall provide facilities for such access so the Owner's Representative may perform his functions under the Contract Documents.

2.2.6 Based on the Owner's Representative's observations and an evaluation of the Contractor's Application for Payment, the Owner's Representative will determine the amounts owing to the Contractor and will issue Certificates for Payment in such amounts, as provided in Paragraph 9.4.

2.2.7 The Owner's Representative will be the interpreter of the requirements of the Contract Documents and the initial decision maker regarding the performance thereunder by the Contractor.

2.2.8 The Owner's Representative will render interpretations necessary for the proper execution or progress of the work, with reasonable promptness and in accordance with any time limit agreed upon. The Contractor may make a written request to the Owner's Representative for such interpretations.

2.2.9 (Not used)

2.2.10 All interpretations and decisions of the Owner's Representative shall be consistent with the intent of and reasonably inferable from the Contract Documents and will be in writing or in the form of drawings. In his capacity as interpreter, he will endeavor to secure faithful performance by the Contractor, will not show partiality, and will not be liable for the result of any interpretation or decision rendered in good faith in such capacity.

2.2.11 The Owner's Representative's decisions in matters relating to artistic effect will be final if consistent with the intent of the

Contract Documents.

2.2.12 The Owner's Representative will have authority to reject work which does not conform to the Contract Documents. Whenever, in his opinion, he considers it necessary or advisable for the implementation of the intent of the Contract Documents, he will have authority to require special inspection or testing of the work in accordance with Subparagraph 7.7.2 whether or not such work is then fabricated, installed or completed. However, neither the Owner's Representative's authority to act under this Subparagraph 2.2.12, nor any decision made by him in good faith either to exercise or not to exercise such authority, shall give rise to any duty or responsibility of the Owner's Representative to the Contractor, any Subcontractor, any of their agents or employees, or any other person performing any of the work.

2.2.13 The Owner's Representative will review and approve or take other appropriate action upon Contractor's submittals such as Shop Drawings, Product Data and samples, but only for conformance with the design concept of the work and with the information given in the Contract Documents. Such action shall be taken with reasonable promptness so as to cause no delay. The Owner's Representative's approval of a specific item shall not indicate approval of an assembly of which the time is a component.

2.2.14 The Owner's Representative will prepare Change Orders in accordance will Article 12 and will have authority to order minor changes in the work as provided in Subparagraph 12.4.1.

2.2.15 The Owner's Representative will conduct inspections to determine the dates of Substantial Completion and Final Completion, will receive and forward to the Owner for the Owner's review of written warranties and related documents required by the Contract and assembled by the Contractor and will issue a final Certificate of payment upon compliance with the requirements of Paragraph 9.9

2.2.16 If the Owner and Owner's Representative agree, the Owner's Representative will provide one or more Project Representatives to assist the Owner's Representative in carrying out his responsibilities at the site. The duties, responsibilities and limitations of authority of any such Project Representative shall be as set forth in an exhibit to be incorporated in the Contract Documents.

2.2.17 The duties, responsibilities and limitations of authority of the Owner's Representative as the Owner's representative during construction as set for in the Contract Documents will not be modified or extended without written consent of the Owner, the Contractor and the Owner's Representative.

2.2.18 In case of the termination of the employment of the Owner's Representative, the Owner shall appoint an Owner's Representative whose status under the Contract Documents shall be that of the former Owner's Representative.

ARTICLE 3

OWNER

3.1 DEFINITION

3.1.1 The Owner is the person or entity identified as such in the Owner-Contractor Agreement and is referred to throughout the Contract Documents as if singular in number and masculine in gender. The term "Owner" means the Owner or his authorized representative.

3.2 INFORMATION AND SERVICES REQUIRED OF THE OWNER

3.2.1 The Owner shall, at the request of the Contractor, at the time of execution of the Owner-Contractor Agreement, furnish to the Contractor reasonable evidence that he had made financial arrangements to fulfill his obligations under the Contract. Unless such reasonable evidence is furnished, the Contractor is not required to execute the Owner-Contractor Agreement or to commence the work.

3.2.2 (Not used)

3.2.3 Except as provided in Subparagraph 4.7.1, the Owner shall secure and pay for necessary approvals, easements, assessments, and charges required for the construction, use or occupancy of permanent structures or for permanent changes in existing facilities.

3.2.4 Information or services under the Owner's control shall be furnished by the Owner with reasonable promptness to avoid delay in the orderly progress of the work.

3.2.5 Unless otherwise provided in the Contract Documents, the Contractor will be furnished, free of charge, all copies of Drawings and Specifications reasonable necessary for the execution of the work.

3.2.6 The Owner shall forward all instructions to the Contractor through the Owner's Representative.

3.2.7 The foregoing are in addition to other duties and responsibilities of the Owner enumerated herein and especially those in respect to work by Owner or by Separate Contractors, Payments and Completion, and Insurance in Articles 6, 9 and 11 respectively.

3.3 OWNER'S RIGHT TO STOP THE WORK

3.3.1 If the Contractor fails to correct defective work as required by Paragraph 13.2 or persistently fails to carry out the work in accordance with the Contract Documents, the Owner, by a written order signed personally or by an agent specifically so empowered by the Owner in writing, may order the Contractor to stop the work, or any portion thereof, until the cause of such order has been eliminated; however, this right of the Owner to stop the work shall not give rise to any duty on the part of the Owner to exercise this right for the benefit of the Contractor or any other person or entity, except to the extent required by Subparagraph 6.1.3.

3.4 OWNER'S RIGHT TO CARRY OUT THE WORK

3.4.1 If the Contractor defaults or neglects to carry out the work in accordance with the Contract Documents and fails within seven days after receipt of written notice from the Owner to commence and continue correction of such default or neglect with diligence and promptness, the Owner may, after seven days following receipt by the Contractor of an additional written notice and without prejudice to any other remedy he may have, make good such deficiencies. In such case, an appropriate Change Order shall be issued deducting from the payments then or thereafter due the Contractor the cost of correcting such deficiencies, including compensation for the Owner's Representative's additional services made necessary by such default, neglect or failure. Such action by the Owner and the amount charged to the Contractor are both subject to the prior approval of the Owner's Representative. If the payments then or thereafter due to the Contractor are not sufficient to cover such amount, the Contractor shall pay the difference to the Owner.

ARTICLE 4

CONTRACTOR

4.1 DEFINITION

4.1.1 The Contractor is the person or entity identified as such in the Owner-Contractor Agreement and is referred to throughout the Contract Documents as if singular in number and masculine in gender. The term "Contractor" means the Contractor or his authorized representative.

1.2 REVIEW OF CONTRACT DOCUMENTS

4.1.2 The Contractor shall carefully study and compare the Contract Documents and shall at once report to the Owner's Representative and the Owner any error, inconsistency or omission he may discover. The Contractor shall not be liable to the Owner or the Owner's Representative for any damage resulting from any such errors, inconsistencies or omissions in the Contract Documents. The Contractor shall perform no portion of the work at any time without Contract Documents or, where required, approved Shop Drawings, Product Data or Samples for such portion of the work.

4.3 SUPERVISION AND CONSTRUCTION PROCEDURES

4.3.1 The Contractor shall supervise and direct the work, using his best skill and attention. He shall be solely responsible for all construction means, methods, techniques, sequences and procedures and for coordinating all portions of the work under the contract.

4.3.2 The Contractor shall be responsible to the Owner for the acts and omissions of his employees, Subcontractors and their agents and employees, and other persons performing any of the work under a contract with the Contractor.

4.3.3 The Contractor shall not be relieved from his obligations to perform the work in accordance with the Contract Documents either by the activities or duties of the Owner's Representative in his administration of the Contract, or by inspections, tests or approvals required or performed under Paragraph 7.8 by persons other than the Contractor.

4.4 LABOR AND MATERIALS

4.4.1 Unless otherwise provided in the Contract Documents, the Contractor shall provide and pay for all labor, materials, equipment, tools, construction equipment and machinery, water, heat, utilities, transportation, and other facilities and services necessary for the proper execution and completion of the work, whether or not incorporated or to be incorporated in the work.

4.4.2 The Contractor shall at all times enforce strict discipline and good order among his employees and shall not employ on the work any unfit person or anyone not skilled in the task assigned to him.

4.5 WARRANTY

4.5.1 The Contractor warrants to the Owner and Owner's Representative that all materials and equipment furnished under this Contract will be new unless otherwise specified, and that all work will be of good quality, free from faults and conforming to these requirements, including substitutions not properly approved and authorized, may be considered defective. If required by the Owner's Representative, the Contractor shall furnish satisfactory evidence as to the kind and quality of materials and equipment. This warranty is not limited by the provisions in Paragraph 13.2.

4.5.2 The Contractor shall and hereby does warrant and guarantee all workmanship, labor, and materials performed and supplied by him or his Subcontractors for a period of one (1) year from the date of completion as evidenced by the date of the Owner's Certificate of Final Completion of this Contract. This also includes all labor required for replacing materials or equipment found to be defective with the one (1) year period. All guarantees for a longer period of time required by the work sections of these Specifications shall be secured by the Contractor from Subcontractors and delivered to the Owner's Representative and are hereby warranted by the Contractor as much as if countersigned by him.

4.6 TAXES

4.6.1 The Contractor shall pay all sales, consumer gross receipts tax, use and other similar taxes for the work or portions thereof provided by the Contractor which are legally enacted at the time Bids are received, whether or not yet effective.

4.7 PERMITS, FEES AND NOTICES

4.7.1 Unless otherwise provided in the Contract Documents, the Contractor shall secure and pay for the construction permit and for all other permits and governmental fees, licenses and inspections necessary for the proper execution and completion of the work which are customarily secured after execution of the Contract and which are legally required at the time the Bids are received.

4.7.2 The Contractor shall give all notices and comply with all laws, ordinances, rules, regulations and lawful orders of any public authority bearing on the performance of the work.

4.7.3 It is not the responsibility of the Contractor to make certain that the Contract Documents are in accordance with applicable laws, statutes, building codes and regulations. If the Contractor observes that any of the Contract Documents are at variance therewith in any respect, he shall promptly notify the Owner's Representative in writing, and any necessary changes shall be accomplished by appropriate Modification.

4.7.4 If the Contractor performs any work knowing it to be contrary to such laws, ordinances, rules and regulations, and without such notice to the Owner's Representative, he shall assume full responsibility therefore and shall in turn notify the Owner's Representative of such action.

4.8 ALLOWANCES

4.8.1 The Contractor shall include in the Contract Sum all allowances stated in the Contract Documents. Items covered by these allowances shall be supplied for such amounts and by these allowances shall be supplied for such amounts and by such persons as the Owner may direct, but the Contractor will not be required to employ persons against whom he makes a reasonable objection.

4.8.2 Unless otherwise provided in the Contract Documents:

A. These allowances shall cover the cost to the Contractor, less any applicable trade, discount of the materials and equipment required by the allowance delivered at the site, and all applicable taxes.

B. The Contractor's costs for unloading and handling on the site, labor, installations costs, overhead, profit and other expenses contemplated for the original allowance shall be included in the Contract Sum and not in this allowance;

C. Whenever the cost is more than or less than the allowance, the Contract Sum shall be adjusted accordingly by Change Order, the amount of which will recognize changes, if any, in handling costs on the site, labor, installation costs, overhead, profit and other expenses.

4.9 SUPERINTENDENT

4.9.1 The Contractor shall employ a competent Superintendent and necessary assistants who shall be in attendance at the project site during the progress of the work. The Superintendent shall represent the Contractor, and all communications given to the Superintendent shall be as binding as if given to the Contractor. Important communications shall be confirmed in writing. Other communications shall be so confirmed on written request in each case.

4.10 PROGRESS SCHEDULES

4.10.1 The Contractor shall, within ten (10) days after the effective date of Notice to Proceed, furnish five copies of a preliminary progress schedule covering his operations for the first thirty (30) days. The preliminary progress schedule shall be a bar graph or an arrow diagram showing the items the Contractor intends to commence and complete the various work stages, operations, and contract means planned to be started during the first thirty (30) days.

4.10.2 Unless otherwise specified in the Special Provisions, the Contractor shall submit for approval by the Owner's Representative, within thirty 30) days after the effective date of Notice to Proceed, five copies of a critical-path-type analysis. The critical-path-type analysis shall include as a minimum; a graphic network diagram; a computer printout or list of activities; and a brief written explanation of the proposed schedule.

4.10.3 The graphic network diagram shall consist of an arrow diagram or a geometric figure and connector diagram which clearly depicts the major subdivisions of the work, the order and interdependencies of activities planned by the Contractor, as well as, activities by others which affect the Contractor's planning. The intended time for starting and completing each activity, the associated float time and the quantity and kinds of major equipment to be used shall be shown for each construction operation. For those activities lasting more than 30 days, either the estimated time for 25-50 and 75 percent completion or other significant milestones in the course of the activity, shall be shown. In addition to the actual construction operations, the network diagram shall show such items as submittal of samples and Shop Drawings, delivery of materials and equipment, construction in the area by other forces, traffic detour controls, and other significant items related to the progress of construction. The graphic network diagram shall be printed or neatly and legibly drawn to a linear scale.

4.10.4 Activities shown shall be coordinated insofar as possible with the Contract Bid items, types of work and maximum number of activities of each type.

4.10.5 The computer printout or list of activities shall show for each activity the estimated duration, the earliest starting and finishing dates, the latest starting and finishing dates, and float or slack time. Activities which constitute the critical sequence shall be identified, showing a total job duration equal to the Contract Time.

4.10.6 The written explanation shall contain sufficient information to describe the construction methods to be used and to enable the Owner's Representative to evaluate the schedule and supporting analysis for validity and practicability. If the schedule or written explanation is not accepted by the Owner's Representative, the Contractor shall resubmit the rejected items within ten (10) days after rejection.

4.10.7 The analysis may employ the use of an electric computer or may consist of a non-computer analysis if the latter is suitable to analyze the number of activities required. The adequacy of the system selected shall be acceptable to the Owner's Representative.

4.10.8 The Contractor shall submit to the Owner's Representative monthly progress status reports on dates directed by the Owner's Representative. Such reports shall list those uncompleted activities which have less than 30 days float and which are either in progress or scheduled to be started within the next reporting period. For each of the listed activities, the following shall be shown:

A. Starting date scheduled in last critical-path-analysis.
B. Actual or intended starting date.
C. Revised activity duration, if any.

If the noted starting dates or duration delay the scheduled project completion date, the delay shall be named. Reasons for the delay shall be given with an explanation of the Contractor's proposed corrective action. The Contract shall also note each activity completed during the report period.

4.10.9 A revised critical-path-type analysis shall be submitted when one or more of the following conditions occur:

A. When an approved change Order significantly affects the contract completion date, or the sequence of activities.
B. When progress of any critical activity falls significantly behind the scheduled progress.
C. When delay on a non-critical activity is of such magnitude as to change the course of the critical

path.

D. At any time the Contractor elects to change any sequence of activities affecting the critical path.

The revised analysis shall be made in the same form and detail as the original submittal and shall be accompanied by an explanation of the reasons for the revisions.

4.10.10 The Contractor shall prosecute the work in accordance with the latest critical path type analysis. Deviations therefrom shall be submitted to the Owner's Representative for review. In the event that the progress of items along the critical path is delayed, the Contractor shall revise his planning to include additional forces, equipment, shifts or hours necessary to meet the contract completion date. All additional cost resulting therefrom will not be borne by the Owner.

4.11 DOCUMENTS AND SAMPLES AT THE SITE

4.11.1 The Contractor shall maintain at the site, for the Owner, one record copy of all Drawings, Specifications, Addenda, Change Orders and other Modifications, in good order and marked currently to record all changes made during construction, and approved Shop Drawings, Product Data and Samples. These shall be available to the Owner's Representative and shall be delivered to him for the Owner upon completion of the work.

4.12 SHOP DRAWINGS, PRODUCT DATA AND SAMPLES

4.12.1 Shop Drawings are drawings, diagrams, schedules and other data specially prepared for the work by the Contractor or any Subcontractor, manufacturer, supplier or distributor to illustrate some portion of the work.

4.12.2 Product Data are illustrations, standard schedules, performance charts, instructions, brochures, diagrams and other information furnished by the Contractor to illustrate a material, product or system for some portion of the work.

4.12.3 Samples are physical examples which illustrate materials, equipment or workmanship and establish standards by which the work will be judged.

4.12.4 The Contractor shall review, approve and submit, with reasonable promptness and in such sequence as to cause no delay in the work or in the work of the Owner of any separate Contractor, all Shop Drawings, Product Data and Sample required by the Contract Documents.

4.12.5 By approving and submitting Shop Drawings, Product Data and Samples, the Contractor represents that he has determined and verified all materials, field measurements, and field construction criteria related thereto, or will do so, and that he has checked and coordinated the information contained within such submittals with the requirements of the work and of the Contract Documents.

4.12.6 The Contractor shall not be relieved of responsibility for any deviation from the requirements of the Contract Documents by the Owner's Representative's approval of Shop Drawings, Product Data or Samples under Subparagraph 2.2.13 unless the Contractor has specifically informed the Owner's Representative in writing of such deviation at the time of submission and the Owner's Representative has given written approval to the specific deviation. The Contractor shall not be relieved from responsibility for errors or omissions in the Shop Drawings, Product Data or Samples by the Owner's Representative's approval thereof.

4.12.7 The Contractor shall direct specific attention, in writing or on resubmitted Shop Drawings, Product Data or Samples, to revisions other than those requested by the Owner's Representative on previous submittals.

4.12.8 No portion of the work requiring submission of a Shop Drawing, Product Data or Sample shall be commenced until the submittal has been approved by the Owner's Representative as provided in Subparagraph 2.2.13. All such portions of the work shall be in accordance with approved submittals.

4.13 USE OF SITE

4.13.1 The Contractor shall confine operations at the site to areas permitted by law, ordinances, permits and the Contract Documents and shall not reasonably encumber the site with any materials or equipment.

4.13.2 The Contractor shall hold and save the Owner free and harmless from liability of any nature or kind arising from use, trespass or damage occasioned by third persons.

4.14 CUTTING AND PATCHING OF WORK

4.14.1 The Contractor shall be responsible for all cutting, fitting or patching that may be required to complete the work or to make its

several parts fit together properly.

4.14.2 The Contractor shall not damage or endanger any portion of the work or the work of the Owner or any separate contracts by cutting, patching or otherwise altering any work, or by excavation. The Contractor shall not cut or otherwise alter the work of the Owner or any separate Contractor except with the written consent of the Owner and of such separate Contractor. The Contractor shall not unreasonably withhold from the Owner any separate Contractor his consent to cutting or otherwise altering the work.

4.15 CLEANING UP

4.15.1 The Contractor at all times shall keep the premises free from accumulation of waste materials or rubbish caused by his operations. At the completion of the work, he shall remove all his waste materials and rubbish from and about the Project as well as all his tools, construction equipment, machinery and surplus materials.

4.15.2 If the Contractor fails to clean up a the completion of the work, the Owner may do so as provide in Paragraph 3.4, and the cost thereof shall be charged to the Contractor.

4.15.3 The Contractor shall be solely responsible for performance of the following clean up:

1. Debris: Regardless of the nature of the debris, it shall be immediately cleared form the work area. Each trade shall cooperate with other trades in the removal of debris and in keeping a clean job throughout.

2. Cleaning of All Glazes: The Contractor shall remove sealant and caulking stains and paint from all glass and shall wash and polish same. Care shall be taken not to scratch glass.

3. Cleaning of All Painted, Decorated, and Stained Work: The Contractor shall remove all marks, stains, finger prints, and other soil or dirt from all painted, decorated, and stained work.

4. Removal of all Temporary Protections: The Contractor shall remove all temporary protections and shall clean all floors at completion.

5. Cleaning and Polishing of all Hardware: The Contractor shall clean and polish all hardware for all trades,. This shall include removal of all stains, dust dirt, paint, etc., upon completion, without scratching or otherwise marring the hardware.

6. Removal of all Spot, Soil, and Paint from all Tile Work: The Contractor shall remove all spots, soil and paint from all tile work and shall wash the same upon completion.

7. Cleaning of all Fixtures and Equipment: The Contractor shall clean all fixtures and equipment, removing all stains, paint, dirt, and dust.

4.16 COMMUNICATIONS

4.16.1 The Contractor shall communicate directly with the Owner's Representative for design clarifications. Any fabrication or installation issues that may result in a change order or may result in a delay to the project schedule shall be communicated to both the Owner and the Owner's Representative at the same time, and documented in writing within two business days. All oral directions from the Owner's Representative to the Contractor shall be documented in writing to the Contractor and the Owner within one business day.

4.17 ROYALTIES AND PATENTS

4.17.1 The Contractor shall pay all royalties and license fees. He shall defend all suits or claims for infringement of any patent rights and shall save the Owner harmless from loss on account thereof, except that the Owner shall be responsible for all such loss when a particular design, process or the product of a particular manufacturer or manufacturers is specified; but if the Contractor has reason to believe that the design, process or product specified is an infringement of a patent, he shall be responsible for such loss unless he promptly gives such information to the Owner's Representative.

4.18 INDEMNIFICATION

4.18.1 To the fullest extent permitted by law, the Contractor shall indemnify and hold harmless the Owner and the Owner's Representative and their agents and employees from and against all claims, damages, losses and expenses, including but not limited to attorneys' fees arising out of or resulting from the performance of the work, provided that any such claim, damage, loss or expense (1) is attributable to bodily injury, sickness, disease or death, or to injury to or destruction of tangible property (other

than the work itself), including the loss of use resulting therefrom, and (2) is caused in whole or in part by any negligent act or omission on the Contractor, any Subcontractor, anyone directly or indirectly employed by any of them, or anyone for whose acts an of them may be liable, regardless of whether or not it is caused in part by a party indemnified hereunder. Such negligent shall not be construed to negate, abridge, or otherwise reduce any other right or obligation of indemnify which would otherwise exist as to any party or person described in this Paragraph 4.18.

4.18.2 In any and all claims against the Owner or the Owner's Representative or any of their agents or employees by an employee of the Contractor, any Subcontractor, anyone directly or indirectly employed by any of them or anyone for whose acts any of them may be liable, the indemnification obligation under this Paragraph 4.18 shall not be limited in any way by any limitation on the amount or type of damages, compensation or benefits payable by or for the Contractor or any Subcontractor under workers' or workmen's compensation acts, disability benefit acts or other employee benefit acts.

4.18.3 The obligation of the Contractor under this Paragraph 4.18 shall not extend to the liability of the Owner's Representative, his agents or employees, arising out of (1) the preparation or approval of maps, drawings, opinions, reports, surveys, change orders, designs, or specifications, or (2) the giving of or the failure to give directions by the Owner's Representative, his agents or employees, provided such giving or failure to give is the primary cause of the injury or damage.

ARTICLE 5

SUBCONTRACTOR

5.1 DEFINITION

5.1.1 A Subcontractor is a person or entity who has a direct contract with the Contractor to perform any of the work at the site. The term "Subcontractor" is referred to throughout the Contract Documents as if singular in number and masculine in gender and means a Subcontractor or his authorized representative. The term "Subcontractor" does not include any separate Contractor or his Subcontractors.

5.1.2 A Sub-subcontractor is a person or entity who has a direct or indirect contract with a Subcontractor to perform any of the work at the Site.

5.2 AWARD OF SUBCONTRACTS AND OTHER CONTRACTS FOR PORTIONS OF THE WORK

5.2.1 Unless otherwise required by the Contract Documents of the Bidding Documents, the Contractor, as soon as practicable after the award of the Contract, shall furnish to the Owner and the Owner's Representative in writing the names of the persons or entities (including those who are to furnish materials or equipment fabricated to a special design) proposed for each of the principal portions of the work. The Owner's Representative will promptly reply to the Contractor in writing stating whether or not the Owner or the Owner's Representative, after due investigation, has reasonable objection to any such proposed person or entity. Failure of the Owner or the Owner's Representative to reply promptly shall constitute notice of no reasonable objection.

5.2.2 The Contractor shall not contract with any such proposed person or entity to whom the Owner or the Owner's Representative has made reasonable objection under the provisions of Subparagraph 5.2.1. The Contractor shall not be required to contract with anyone to whom he has a reasonable objection.

5.3 SUBCONTRACTUAL RELATION

5.3.1 By an appropriate written agreement, the Contractor shall require each Subcontractor, to the extent of the work to be performed by the Subcontractor, to be bound to the Contractor by the terms of the Contract Documents, and to assume toward the Contractor all the obligations and responsibilities which the Contractor, by these Documents, assumes toward the Owner and the Owner's Representative. Said agreement shall preserve and protect the rights of the Owner and the Owner's Representative under the Contract Documents with respect to the work to be performed by the Subcontractor so that the subcontracting thereof will not prejudice such rights, and shall allow to the Subcontractor, unless specifically provided otherwise in the Contractor-Subcontractor agreement, the benefit of all rights, remedies and redress against the Contractor that the Contractor, by these Documents, has against the Owner. Where appropriate, the Contractor shall require each Subcontractor to enter into similar agreements with his Sub-subcontractors. The Contractor shall make available to each proposed Subcontractor, prior to the execution of the Subcontract, copies of the Contract Documents to which the Subcontractor will be bound by this Paragraph 5.3, and identify the Subcontractor any terms and conditions of the proposed Subcontract which may be at variance with the Contract Documents. Each Subcontractor shall similarly make copies of such Documents available to his Subcontractors.

ARTICLE 6

WORK BY OWNER OR BY SEPARATE CONTRACTORS

6.1 OWNER'S RIGHT TO PERFORM WORK AND TO AWARD SEPARATE CONTRACTS

6.1.1 The Owner reserves the right to perform work related to the Project with his own forces, and to award separate contracts in connection with other portions of the Project or other work on the site under these or similar Conditions of the Contract. If the Contractor claims that delay or additional cost is involved because of such action by the Owner, he shall make such claim as provided elsewhere in the Contract Documents.

6.1.2 When separate contracts are awarded for different portions of the Project or other work on the site, the term "Contractor" in the Contract Documents in each case shall mean the Contractor who executes each separate Owner-Contractor Agreement.

6.1.3 The Owner will provide for the coordination of the work of his own forces and of each separate Contractor with the work of the Contractor, who shall cooperate therewith as provided in paragraph 6.2.

6.2 MUTUAL RESPONSIBILITY

6.2.1 The Contractor shall afford the Owner and the Separate Contractors reasonable opportunity for the introduction and storage of their materials and equipment and the execution of their work, and shall connect and coordinate his work with theirs as required by the Contract Documents.

6.2.2 If any part of the Contractor's work depends for proper execution or results upon the work of the Owner or any separate Contractor, the Contractor shall, prior to proceeding with the work, promptly report to the Owner's Representative any apparent discrepancies or defects in such other work that render it unsuitable for such proper execution and results. Failure of the Contractor so to report shall constitute an acceptance of the Owner's or the separate Contractor's work as fit and proper to receive his work, except as to defects which may subsequently become apparent in such work by others.

6.2.3 Any costs caused by defective or ill-timed work shall be borne by the party responsible thereof.

6.2.4 Should the Contractor wrongfully cause damage to the work or property of the Owner, or to other work on the promptly remedy such damage as provided in Subparagraph 10.2.5.

6.2.5 Should the Contractor wrongfully cause damage to the work or property of any separate Contractor, the Contractor shall upon due notice promptly attempt to settle with such other Contractor by agreement, or otherwise to resolve the dispute. If such separate Contractor sues or initiates an arbitration proceeding against the Owner on account of any damage alleged to have been cause by the Contractor, the Owner shall notify the Contractor, who shall defend such proceedings at the Owner's expense, and if any judgment or award against the Owner arises therefrom, the Contractor shall pay or satisfy it and shall reimburse the Owner for all attorneys' fees and court or arbitration costs which the Owner has incurred.

6.3 OWNER'S RIGHT TO CLEAN UP

6.3.1 If a dispute arises between the Contractor and separate Contractors as to their responsibility for cleaning up as required by Paragraph 4.15, the Owner may clean up and charge the cost thereof to the Contractors responsible therefor as the Owner's Representative shall determine to be just.

ARTICLE 7

MISCELLANEOUS PROVISIONS

7.1 GOVERNING LAW

7.1.1 The Contract shall be governed by the law of the State of New Mexico.

7.1.2 The Owner and the Contractor each binds himself, his partners, successors, assigns and legal representatives to the other party hereto and to the partners, successors, assigns and legal representatives of such other party in respect to all covenants, agreements, and obligations contained in the Contract Documents. Neither part to the Contract shall assign the Contract or sublet it as a whole without the written consent of the other, nor shall the Contractor assign any moneys due or to become due to him thereunder, without the previous written consent of the Owner.

7.2 WRITTEN NOTICE

7.2.1 Written notice shall be deemed to have dully served if delivered in person to the individual or member of the firm or entity or to an officer of the corporation for whom it was intended, or if delivered at or sent by registered or certified mail to the last business address known to him who gives the notice.

7.3 CLAIMS FOR DAMAGES

7.3.1 Should either party to the Contract suffer injury or damage to person or property because of any act or omission of the other party or of any of his employees, agents or others for whose acts he is legally liable, claim shall be made in writing to such other party within a reasonable time after the first observance of such injury or damage.

7.4 PERFORMANCE BOND AND LABOR AND MATERIAL PAYMENT BOND

7.4.1 The Contractor to whom the Contract is awarded shall furnish and pay for reputable and approved Performance and Labor and Material Payment Bonds, each for the full amount of the Contract Sum. Bonds shall be executed on standard AIA forms.

7.5 RIGHTS AND REMEDIES

7.5.1 The duties and obligations imposed by the Contract Documents and the rights and remedies available thereunder shall be in addition to and not a limitation of any duties, obligations, rights and remedies otherwise imposed or available by law.

7.5.2 No action or failure to act by the Owner, the Owner's Representative, or the Contractor shall constitute a waiver of any right or duty afforded any of them under the Contract, nor shall any such action or failure to act constitute an approval of or acquiescence in any breach thereunder, except as may be specifically agreed in writing.

7.6 TESTS

7.6.1 If the Contract Document, laws, ordinances, rules, regulations or orders of any public authority having jurisdiction require any portion of the work to be inspected, tested or approved, the Contractor shall give the Owner's Representative timely notice of its readiness so the Owner's Representative may observe such inspection, testing or approval. The Contractor shall bear all costs of such inspections, tests or approvals. Tests specifically called for by specifications shall be made by an independent, certified, professional testing laboratory acceptable to the Owner's Representative, and the Contractor shall employ same and pay all charges in connection therewith. Records of tests shall be delivered to the Owner's Representative in duplicate on acceptable forms.

7.6.2 If the Owner's Representative determines that any work requires special inspection, testing, or approval which Subparagraph 7.6.1 does not include, he will, upon written authorization from the Owner, instruct the Contractor to order such special inspection, testing or approval, and the Contractor shall give notice as provided in Subparagraph 7.6.1. If such special inspection or testing reveals a failure of the work to comply with the requirements of the Contract Documents, the Contractor shall bear all costs thereof, including compensation for the Owner's Representative's additional services made necessary by such failure; otherwise the Owner shall bear such costs, and an appropriate Change Order shall be issued.

7.7 INTEREST

7.7.1 The Owner will not pay interest on payments due and unpaid under the Contract Document.

ARTICLE 8

TIME

8.1 DEFINITIONS

8.1.1 Unless otherwise provided, the Contract Time is the period of time allotted in the Contract Documents for Substantial Completion of the work as defined in Subparagraph 8.1.3, including authorized adjustments thereto.

8.1.2 The date of commencement of the work is the date established in a Notice to Proceed. If there is no Notice to Proceed, it shall be the date of the Owner-Contractor Agreement or such other date as may be established therein.

8.1.3 The Date of Substantial Completion of the work or designated portion thereof is the Date certified by the Owner's Representative and approved by the Owner when construction is deficiently complete, in accordance with the Contract Documents, so the Owner can occupy or utilize the work or designated portion thereof for the use for which it is intended.

8.1.4 The term "day" as used in the Contract Document shall mean calendar day unless otherwise specifically designated.

8.2 PROGRESS AND COMPLETION

8.2.1 All time limits stated in the Contract Documents are the essence of the Contract.

8.2.2 The Contractor shall begin the work on the date of commencement as defined in Subparagraph 8.1.2. He shall carry the work forward expeditiously with adequate forces and shall achieve Substantial Completion within the Contract Time.

8.3 DELAYS AND EXTENSIONS OF TIME

8.3.1 If the Contractor is delayed at any time in the progress of the work by any act or neglect of the Owner or the Owner's Representative or by any employees of either, or by any separate Contractor employed by the Owner or by changes ordered in the work, or by labor disputes, fire, unusual delay in unavoidable casualties, or any causes beyond the Contractor's control or by delay authorized by the Owner pending arbitration, or by any other cause which the Owner's Representative determines may justify the delay, then the Contract Time shall be extended by Change Order for such reasonable time as the Owner's Representative may determine.

8.3.2 Any claim for extension of time shall be made in writing to the Owner's Representative not more than twenty days after the commencement of the delay; otherwise it shall be waived. In the case of a continuing delay, only one claim is necessary. The Contractor shall provide an estimate of the probable effect of such delay on the progress of the work.

8.3.3 If written agreement is made stating the dates upon which interpretations as provided in Subparagraph 2.28 shall be furnished, then no claim for delay shall be allowed on account of failure to furnish such interpretations until fifteen days after written request is made for them, and not then unless such claim is reasonable.

8.3.4 This Paragraph 8.3 does not exclude the recovery of damages for delay by either party under other provisions of the Contract Documents.

ARTICLE 9

PAYMENTS AND COMPLETION

9.1 CONTRACT SUM

9.1.1 The Contract Sum is stated in the Owner-Contractor Agreement and including authorized adjustments thereto, is the total amount payable by the Owner to the Contractor for the performance of the work under the Contract Documents.

9.2 SCHEDULE OF VALUES

9.2.1 Before the first Application for Payment, the Contractor shall submit to the Owner and Owner's Representative a schedule of values allocated to the various portion of the work, prepared in such form and supported by such data to substantiate its accuracy as the Owner or Owner's Representative may require. This schedule, unless objected to by the Owner or Owner's Representative, shall be used only as a basis for the Contractor's Applications for payment.

9.3 APPLICATIONS FOR PAYMENT

9.3.1 At least ten days before the date for each progress payment established in the Owner-Contractor Agreement, the Contractor shall submit to the Owner's Representative an itemized Application for Payment, notarized if required, supported by such data substantiating the Contractor's right to payment as the Owner or the Owner's Representative may require, as provided elsewhere in the Contract Documents.

9.3.2 Unless otherwise provided in the Contract Documents, payments will be made on account of materials or the Owner payments may similarly be made for materials or equipment suitably stored at some other location agreed upon in writing. Payments for materials or equipment stored on or off the site shall be conditioned upon submission by the Contractor of bills of sale or such other procedures satisfactory to the Owner to establish the Owner's title to such materials or equipment or otherwise protect the Owner's interest, including applicable insurance and transportation to the site for those materials and equipment stored off the site.

9.3.3 The Contractor warrants that title to all work, materials and equipment covered by an Application for Payment will pass to the Owner either by incorporation in the construction or upon the receipt of payment by the Contractor, whichever occurs first, free and clear of all liens, claims, security interest or encumbrances hereinafter referred to in this Article 9 as "liens"; and that no work, materials or equipment covered by an Application for Payment will have been acquired by the Contractor, or by any other person performing work at the site or furnishing materials or equipment for the Project, subject to an agreement under which an interest therein or an encumbrance thereon is retained by the seller or otherwise imposed by the Contractor or such other person.

9.4 CERTIFICATES FOR PAYMENT

9.4.1 The Owner's Representative will within three days after the receipt of the Contract's Application for Payment, approve the Application for Payment to the Owner with a copy to the Contractor for such amount as the Owner's Representative determines is properly due, or notify the Contractor in writing of his reasons for withholding his approval as provided in Subparagraph 9.6.1.

9.4.2 The issuance of an approval of the Application for Payment will constitute a representation by the Owner's Representative to the Owner, based on his observations at the site as provided in Subparagraph 2.2.3 and the data comprising the Application for Payment, that the work has progressed to the point indicated; that, to the best of his knowledge, information and belief, the quality of the work is in accordance with the Contract Documents (subject to an evaluation of the work for conformance with the Contract Documents upon Substantial Completion, to the results of any subsequent tests required by or performed under the Contract Documents correctable prior to completion, and that the Contractor is entitled to payment in the amount certified. However, by issuing an approval of the Application for Payment, the Owner's Representative shall not thereby be deemed to represent that he has made exhaustive or continuous on-site inspections to check the quality or quantity of the work or that he has reviewed the construction means, methods, techniques, sequences procedures, or that he has made any examination to ascertain how or for what purpose the Contractor has used the moneys previously paid on account of the Contract Sum.

9.5 PROGRESS PAYMENTS

9.5.1 After the Owner's Representative has issued an approval of the Application for Payment, the Owner shall make payment in the manner and within the time provided in the Contract Documents.

9.5.2 The Contractor shall promptly pay each Subcontractor upon receipt of payment from the Owner, out of the amount paid to the Contractor on account of such Subcontractor's work, the amount to which said Subcontractor is entitled, reflecting the percentage actually retained, if any, from payments to the Contractor on account of such Subcontractor's work. The Contractor shall, by an appropriate agreement with each Subcontractor, require each Subcontractor to make payment to his Subcontractors in similar manner.

9.5.3 The Owner's Representative may, on request and at his discretion, furnish to any Subcontractor, if practicable, information regarding the percentages of completion or the amounts applied for by the Contractor and the action taken thereon by the Owner's Representative on account of work done by such Subcontractor.

9.5.4 Neither the Owner nor the Owner's Representative shall have any obligation to pay or to see to the payment of any moneys to any Subcontractor except as may otherwise be required by law.

9.5.5 No Certificate for progress payment, no progress payment, nor any partial or entire use of occupancy of the Project by the Owner shall constitute an acceptance of any work not in accordance with the Contract Documents.

9.6 PAYMENT WITHHELD

9.6.1 The Owner's Representative may decline to certify payment and may withhold his Certificate in whole or in part, to the extent necessary to reasonably protect the Owner, if in his opinion he is unable to make representations to the Owner as provided in Subparagraph 9.4.2.

9.6.2. If the Owner's Representative is unable to make representations to the Owner, as provided in Subparagraph 9.4.2 and to certify payment in the amount of the Application, he will notify the Contractor as provided in Subparagraph 9.4.1. If the Contractor and Owner's Representative cannot agree on a revised amount, the Owner's Representative will promptly issue a Certificate for Payment for the amount for which he is able to make such representations to the Owner. The Owner's Representative may also decline to certify payment, or because of subsequently discovered evidence or subsequent observations, he may nullify the whole or any part of any Certificate for Payment previously issued, to such extent as may be necessary in his opinion to protect the Owner from loss because of:

A) Defective work not remedied;

B) Third party claims filed or reasonable evidence indicating probable filing of such claims;

C) Failure of the Contractor or make payments properly to Subcontractors or for labor, materials or equipment;

D) Reasonable evidence that the work cannot be completed for the unpaid balance of the Contract Sum.

E) Damage to the work of another Contractor;

F) Reasonable evidence that the work will not be completed within the Contract Time; or,

G) Failure to carry out the work in accordance with the Contract Documents.

9.6.2 When the above grounds in Subparagraph 9.6.1 are removed, payment shall be made for amounts withheld because of them.

9.7 FAILURE OF PAYMENT

9.7.1 If the Owner's Representative does not issue a Certificate for Payment, through no fault of the Contractor, within three days after receipt of the Contractor's Application for Payment, or if the Owner does not pay the Contractor within seven days after the date established in the Contract Documents any amount certified by the Owner's Representative, then the Contractor may, upon seven additional days' written notice to the Owner and the Owner's Representative, stop the work until payment of the amount owing has been received. The Contract Sum shall be increased by the amount of the Contractor's reasonable costs of shut-down, delay and start-up, which shall be effected by appropriate Change Order in accordance with Paragraph 12.3.

9.8 SUBSTANTIAL COMPLETION

9.8.1 When the Contractor considers that the work, or a designated portion thereof which is acceptable to the Owner, is substantially complete as defined in Subparagraph 8.1.3, the Contractor shall prepare for submission to the Owner's Representative a list of items to be completed or corrected. The failure to include any items on such list does not alter the responsibility of the Contractor to complete all work in accordance with the Contract Documents. When the Owner's Representative, with the Owner, on the basis of an inspection determines that the work or designated portion thereof is substantially complete, he will then prepare a Certificate of Substantial Completion Form, AIA Document G704-1978, which shall establish the Date of Substantial Completion, shall state the responsibilities of the Owner and the Contractor for security, maintenance within which the Contractor shall complete the items listed therein. Warranties required by the Contract Document shall commence on the date of Final Completion of the work or designated portion thereof unless otherwise provided in the Certificate of Substantial Completion. The Certificate of Substantial Completion shall be submitted to the Contractor and the Owner for their written acceptance of the responsibilities assigned to them in such Certificate.

9.8.2 Upon Substantial Completion of the work or designated portion thereof and upon application by the Contractor and certification by the Owner's Representative, the Owner shall make payment, reflecting adjustment in retainage, if any, for such work or portion thereof, as provided in the Contract Documents.

9.9 FINAL COMPLETION AND FINAL PAYMENT

9.9.1 Upon receipt of written notice that the work is ready for final inspection and acceptance and upon receipt of a final Application for Payment, the Owner's Representative will promptly make such inspection and, if he finds the work acceptable under the Contract Documents and the Contract fully performed, he will promptly issue final Certificate for Payment stating that, to the best of his observations and inspections, the work has been completed in accordance with the terms and conditions of the Contract Documents and that the entire balance found to be due the Contractor and noted in said Final Certificate, is due and payable. The Owner's Representative's Final Certificate of payment will constitute a further representation that the conditions precedent to the Contractor's being entitled to final payment as set forth in Subparagraph 9.9.2 have been fulfilled.

9.9.2 Neither the final payment nor the remaining retained percentage shall become due until the Contractor submits to the Owner's Representative (1) an affidavit that all payrolls, bills for materials and equipment, and other indebtedness connected with the work for which the Owner or his property might in any way be responsible have been paid or otherwise satisfied, (2) consent of surety, if any, to final payment, and (3) if required by the Owner, other data establishing payment or satisfaction of all such obligations, such as receipts, releases and waivers of liens arising out of the Contract, to the extent and in such form as may be designed by the Owner. If any Subcontractor refuses to furnish a release or waiver required by the Owner the Contractor may furnish a bond satisfactory to the Owner to indemnify him against any such lien. If any such lien remains unsatisfied after all payments are made, the Contractor shall refund to the Owner all moneys that the latter may be compelled to pay in discharging such lien, including all costs and reasonable attorneys' fees.

9.9.3 If, after Substantial Completion of the work, final completion thereof is materially delayed through no fault of the Contractor or by the issuance of Change Orders affecting final completion, and the Owner's Representative so confirms, the Owner shall, upon application by the Contractor and certification by the Owner's Representative and without terminating the Contract, make payment of the balance for that portion of the work fully completed and accepted. If the remaining balance for work not fully completed or corrected is less than the retainage stipulated in the Contract Document, and if bonds have been furnished as provided in Paragraph 7.5, the written consent of the surety to the payment of the balance due for that portion of the work fully completed and accepted shall be submitted by the Contractor to the Owner's Representative prior to certification of such payment. Such payment shall be made under the terms and conditions governing final payment, except that it shall not constitute a waiver of claims.

9.9.4 The making of final payment shall constitute a waiver of all claims by the Owner except those arising from:

A) Unsettled liens;

B) Faulty or defective work appearing after Substantial Completion;

C) Failure of the work to comply with the requirements of the Contract Documents; and

D) Terms of any special warranties required by the Contract Documents.

9.9.5 The acceptance of final payment shall constitute a waiver of all claims by the Contractor except those previously made in writing and identified by the Contractor as unsettled at the time of the final Application for Payment.

ARTICLE 10

PROTECTION OF PERSONS AND PROPERTY

10.1 SAFETY PRECAUTIONS AND PROGRAMS

10.1.1 The Contractor shall be responsible in initiating, maintaining and supervising all safety precautions and programs in connection with the work.

10.2. SAFETY OF PERSONS AND PROPERTY

10.2.1 The Contractor shall take all reasonable precautions for the safety of, and shall provide all reasonable protection to prevent damage, injury or loss to:

A) All employees on the work and all other persons who may be affected thereby;

B) All the work and all materials and equipment to be incorporated therein, whether in storage on or off the site, under the care, custody or control of the Contractor or any of his Subcontractors or Sub-subcontractors; and

C) Other property at the site or adjacent thereto, including trees, shrubs, lawns, walks, pavements, roadways, structures and utilities no designated for removal, relocation or replacement in the course of construction.

10.2.2 The Contractor shall give all notices and comply with all applicable laws, ordinances, rules, regulations, and lawful orders of any public authority bearing on the safety of persons or property or their protection from damage, injury or loss.

10.2.3 The Contractor shall erect and maintain, as required by existing conditions and progress of the work, all reasonable safeguards for safety and protection, including posting danger signs and other warnings against hazards, promulgating safety regulations and notifying Owners and users of adjacent utilities.

10.2.4 When the use of storage of explosives or other hazardous materials or equipment is necessary for the execution of the work, the Contractor shall exercise the utmost care and shall carry on such activities under the supervision of properly qualified personnel.

10.2.5 The Contractor shall promptly remedy all damage or loss (other than damage of loss insured under paragraph 11.3) to any property referred to in Clauses 10.2.1.2 and 10.2.1.3 caused in whole or in part by the Contractor, any Subcontractor or anyone directly or indirectly employed by any of them, or by anyone for whose acts any of them may be liable and for which the Contractor is responsible under clauses 10.2.1.2 and 10.2.1.3, except damage or loss attributable to the acts or omissions of the Owner or the Owner's Representative or anyone directly or indirectly employed by either of them, or by anyone for whose acts either of them may be liable, and no attributable to the fault or negligence of the Contractor. The foregoing obligations of the Contractor are in addition to his obligations under Paragraph 4.18.

10.2.6 The Contractor shall designate a responsible member of his organization at the site whose duty shall be the prevention of accidents. This person shall be the Contractor's Superintendent unless otherwise designated by the Contractor in writing to the Owner and the Owner's Representative.

10.2.7 The Contractor shall not load or permit any part of the work to be loaded so as to endanger its safety.

10.3 EMERGENCIES

10.3.1 In any emergency affecting the safety of persons or property, the Contractor shall act, at his reasonable

discretion, to prevent threatened damage, injury or loss. Any additional compensation or extension of time claimed by the Contractor on account of emergency work shall; be determined as provided in Article 12 for Changes in the work.

ARTICLE 11

INSURANCE

11.1 CONTRACTOR'S LIABILITY INSURANCE

11.1.1 The Contractor shall maintain in effect, and shall require all Subcontractors and others performing any portion of this Contract to maintain in effect, insurance of the types and respective minimum limits required. Such insurance shall cover all operations under this Contract. Maintenance of such insurance in at least the specified minimum amounts shall not relieve the Contractor or liability for loss in excess of the limits of liability specified herein or otherwise not covered by the coverage's required herein. The Contractor shall bear the cost of such insurance and include its costs in the Bid. The limits of insurance to be maintained are specified in the Agreement Between Owner and Contractor.

11.1.2 Certificates of Insurance acceptable to the Owner shall be filed with the Owner prior to commencement of the work. These Certificates shall contain a provision that coverage afforded under the policies will not be canceled until at least thirty days; prior written notice has been given to the Owner.

11.2 OWNER'S LIABILITY INSURANCE

11.2.1 The Owner shall be responsible for purchasing and maintaining his own liability insurance and, at his option, may purchase and maintain such insurance as will protect him against all claims which may arise from operations under the Contract.

11.3 PROPERTY INSURANCE

11.3.1 The Contractor shall maintain builder's risk property insurance or self-insurance, or a combination of insurance and self-insurance, upon the work at the site for at least the actual cash value thereof. The builder's risk insurance shall cover the interests of the Owner, the Contractor, Subcontractors, and Sub-subcontractors in the work. The insurance shall insure against at least the following perils: fire extended coverage, vandalism, and malicious mischief. The Contractor shall bear the cost of such insurance and include its cost in the Bid.

11.3.2 Any loss insured or self-insured under Subparagraph 11.3.1 is to be adjusted with the Owner and made payable to the Owner as trustee for the insured, as their interests may appear subject to the requirements of any applicable mortgage clause. The Owner shall deposit the proceeds in a separate account and shall distribute them in accordance with such agreement as the parties in interest, including the Owner, may reach. The Contractor shall pay each Subcontractor a just share of any insurance proceeds which the Contractor receives and shall require by written agreement signed by the Subcontractor that the Subcontractor will

make payments to his Sub-subcontractors in a similar manner. If after such loss no other special agreement is made, replacement of damaged work shall be covered by an appropriate order.

11.3.3 To the extent permitted under their respective property insurance policies, the Owner and the Contractor hereby waive all rights, each against the other, for damages caused by fire or other perils to the extent covered by Insurance obtained pursuant to this Article 11 or any other property insurance applicable to the work, except such rights as they may have to the proceeds of such Insurance held by the Owner as trustee. The Owner or the Contractor, as appropriate, shall require the Owner's Representative, other Contractors, Subcontractors, and Sub-subcontractors to similarly waive rights of subrogation or property insurers.

11.3.4 If the Owner finds it necessary to occupy use of any portion of the work prior to Substantial Completion, such occupancy or use shall not commence prior to the time mutually agreed to by the Owner and the Contractor and, if required by the applicable insurance or self-insurance coverage not prior to the time the builder's risk property insurer has consented to such occupancy or use. The Contractor's consent to such occupancy or use shall not be unreasonably withheld.

11.4 LOSS OF USE INSURANCE

11.4.1 The Owner, at his option, may purchase and maintain such insurance as will insure him against loss of use of his property due to fire or other hazards, however caused.

ARTICLE 12

CHANGES IN THE WORK

12.1 CHANGE ORDERS

12.1.1 A Change Order is a written order to the Contractor signed by the Owner's Representative and the Contractor and approved in writing by the Owner. A Change Order may be issued only after the execution of the Contract and shall be the only means used to order changes in the work for which the Contractor requires additional compensation, changes to the Contract Time, or changes to the Contract Sum. Minor changes in the work for which the Contractor requires no additional compensation or time shall be executed in accordance with the provision of Subparagraph 12.4.1.

12.1.2 The Owner, without invalidating the Contract, may order changes in the work within the general scope of the Contractor consisting of additions, deletions or other revisions, the Contract Sum and the Contract Time being adjusted accordingly. All such changes in the work shall be authorized by Change Order and shall be performed under the applicable conditions of the Contract Documents.

12.1.3 The cost or credit to the Owner resulting from a change in the work shall be determined in one or more of the following ways:

A) By mutual acceptance of a lump sum properly itemized an supported by sufficient substantiating data to permit evaluation;

B) By unit prices stated in the Contract Documents or subsequently agreed upon;

C) By cost to be determined in a manner agreed upon by the parties and a mutually acceptable fixed or percentage fee; or

D) By the method provided in Subparagraph 12.1.4.

12.1.4 If none of the methods set forth in Clauses 12.1.2., 12.1.3. or 12.1.3. is agreed upon, the Contractor, provided he receives a written order signed by the Owner, shall promptly proceed with the work involved. The cost of such work shall the be determined by the Owner's Representative on the basis of the reasonable expenditures and savings of those performing the work attributable to the change, including, in the case of an increase in the Contract Sum, a reasonable allowance for overhead and profit. In such case, the Contractor shall keep and present, in such form as the Owner's Representative may prescribe, an itemized accounting together with appropriate supporting data for inclusion in a Change Order. Unless otherwise provided in the Contract Documents, cost shall be limited to the following: cost of materials, including sales tax and cost of delivery; cost of labor, including social security, old age and unemployment insurance, and fringe benefits, required by agreement or custom, workers' or workmen's compensation insurance; bond premiums; rental value of equipment and machinery; and the additional costs of supervision and field office personnel directly attributable to the change. Pending final determination of cost to the Owner payments on account shall be made on the Owner's Representative's Certificate for payment. The amount of credit to be allowed by the Contractor to the Owner for any deletion or change which results in a net decrease in the Contract Sum will be the amount of the actual net cost as confirmed by the Owner's Representative. When both additions and credits covering related work or substitutions are involved in any one change, the allowance for overhead and profit shall be figured on the basis of the net increase, if any, with respect to that change.

12.1.5 If unit prices are stated in the Contract Documents or subsequently agreed upon, and if the quantities originally contemplated are so changed in a proposed Change Order that application of the agreed unit prices to the quantities of work proposed will cause substantial inequity to the Owner or the Contractor, the applicable unit prices shall be equitably adjusted.

12.1.6 By submission of a Bid, the Contractor agrees and binds himself to the following method of calculating Change Order costs. The Owner also agrees to the following method of calculating the cost of any changes to the Contract. With each proposal for a change in the amount of the Contract, the Contractor shall submit an itemized breakdown of all increases or decreases in the cost of the Contractor's and all Subcontractor's and Sub-subcontractor's work to include at least the following detail in the general order listed:

A) Material quantities and unit costs;

B) Labor amounts and hourly rates (identified with specific items of material to be placed or operation to be performed);

C) Costs inherent in use of Contractor/Sub-subcontractor owned equipment;

D) Equipment rental, if any;

E) Workmen's compensation and public liability insurance;

F) General administration, overhead, supervision, project insurance and profit, based on the following schedule:

Subtotal before Applying the Percentage Shown	$500 & Less	Over $500

Contractor for work performed by his own forces	22%	19%
Contractor for work performed by Subcontractor	10%	8%
Subcontractor for work performed by his own forces	18%	15%
Subcontractor for work performed by Sub-subcontractor	10%	8%
Sub-subcontractor for work performed by his own forces	18%	15%

G) Employment taxes under FICA and FUTA; and

H) State gross receipts tax (Contractor only).

12.1.7 The quotation for work under a Change Order shall be binding for sixty (60) days from the date submitted by the Contractor.

12.2 CONCEALED CONDITIONS

12.2.1 Should concealed conditions encountered in the performance of the work below the surface of the ground or should concealed or unknown conditions in an existing structure be at variance with the conditions indicated by the Contract Documents, or should unknown physical conditions below the surface of the ground or should concealed or unknown conditions in an existing structure of an unusual nature differing materially from those ordinarily encountered and generally recognized as inherent in work of the Character provided for in this Contract, be encountered, the Contract Sum shall be equitably adjusted by change Order upon verified claim by either party made within twenty days after the first observance of the conditions.

12.2.2 If the Contractor wishes to make a claim for an increase in the Contract Sum, he shall give the Owner's Representative and Owner written notice thereof within twenty days after the occurrence of the event giving rise to such claim. This notice shall be given by the Contractor before proceeding to execute the work, except in an emergency endangering life or property, in which case the Contractor shall proceed in accordance with Paragraph 10.3. No such claim shall be valid unless so made. If such claims are justified and the Owner authorizes an increase in the Contract Sum, the Owner and the Contractor shall proceed to negotiate the amount of the adjustment in the Contract Sum. If the Owner and the Contractor cannot agree on the amount of the adjustment in the Contract Sum, it shall be determined by the Owner's Representative. Any change in the Contract Sum resulting from such claim shall be authorized by Change Order.

12.2.3 If the Contractor claims that additional cost is involved because of, but not limited to, (1) any written interpretation pursuant to Subparagraph 2.2.8, (2) any order by the Owner to stop the work pursuant to Paragraph 3.3 where the Contractor was not at fault, (3) any written order for a minor change in the work issued pursuant to Paragraph 12.4, or (4) failure of payment by the Owner pursuant to Paragraph 9.7, the Contractor shall make such claims provided in Subparagraph 12.3.1.

12.3 MINOR CHANGES IN THE WORK

12.3.1 The Owner's Representative will have authority to order minor changes in the work not involving an adjustment in the Contract Sum or an extension of the Contract Time and not inconsistent with the intent of the Contract Documents. Such changes shall be effected by written order and shall be binding on the Owner and the Contractor. The Contractor shall carry out such written orders promptly.

ARTICLE 13

UNCOVERING AND CORRECTION OF WORK

13.1 UNCOVERING OF WORK

13.1.1 If any portion of the work should be covered contrary to the request of the Owner's Representative or to requirements specifically expressed in the Contract Documents, it must, if required in writing by the Owner's Representative, be uncovered for his observation and shall be replaced at the Contractor's expense.

13.1.2 If any portion of the work has been covered which the Owner's Representative has not specifically requested to observe prior to begin covered, the Owner's Representative may request to see such work and it shall be uncovered by the Contractor. If such work be found in accordance with the Contract Documents, the cost of uncovering and replacement shall, by appropriate Change Order, be charged to the Owner. If such work be found not in accordance with the Contract Documents, the Contractor shall pay such costs unless it be found that this condition was caused by the Owner or a separate Contractor as provided in Article 6, in which even the Owner shall be responsible for the payment of such costs.

13.2 CORRECTION OF WORK

13.2.1 The Contractor shall promptly correct all work rejected by the Owner's Representative as defective or as failing to conform to the Contract Documents whether observed before or after Substantial completion and whether or not fabricated, installed or completed. The Contractor shall bear all costs of correcting such rejected work, including compensation for the Owner's Representative's additional services made necessary thereby.

13.2.2 If, within one year after the Date of Substantial Completion of the work or designated portion thereof or within one year after acceptance by the Owner of designated equipment or within such longer period of time as may be prescribed by law or by the terms of any applicable special warranty required by the Contract Documents, any of the work is found to be defective or not in accordance with the Contract Documents, the Contractor shall correct it promptly after receipt of a written notice from the Owner to do so unless the Owner has previously given the Contractor a specific written acceptance of such condition. This obligation shall survive termination of the Contract. The Owner shall give such notice promptly after discovery of the condition.

13.2.3 The Contractor shall remove from the site all portions of the work which are defective or non-conforming and which have not been corrected under Subparagraphs 4.5, 13.2.1 and 13.2.2, unless removal is specifically waived in writing by the Owner.

13.2.4 If the Contractor fails to correct defective or non-conforming work as provided in Subparagraph 4.5.1, 13.2.1 and 13.2.2, the Owner may correct it in accordance with Paragraph 3.4.

13.2.5 If the Contractor does not proceed with the correction of such defective or non-conforming work within a reasonable time fixed by written notice from the Owner's Representative, the Owner may remove it and may store the materials or equipment at the expense of the Contractor. If the Contractor does not pay the cost of such removal and storage within ten days thereafter, the Owner may upon ten additional days' written notice sell such work at auction or at private sale and shall account for the net proceeds thereof, after deducting all the costs that should have been borne by the Contractor including compensation for the Owner's Representative's additional services made necessary thereby. If such proceeds of sale do not cover all costs which the Contractor should have borne, the difference shall be charged to the Contractor and an appropriate Change Order shall be issued. If the payments then or thereafter due the Contractor are not sufficient to cover such amount, the Contractor shall pay the difference to the Owner.

13.2.6 The Contractor shall bear the cost of making good all work of the Owner or separate Contractors destroyed or damaged by such correction or removal.

13.2.7 Nothing contained in this Paragraph 13.2 shall be construed to establish a period of limitation with respect to any other obligation which the Contractor might have under the Contract Documents, including Paragraph 4.5 hereof. The establishment of the time period of one year after the Date of Substantial Completion or such longer period of time as may be prescribed by law or by the terms of any warranty required by the Contract Documents relates only to the Contractor to correct the work and has no relationship to the time within which his obligation to comply with the Contract Documents may be sought to be enforced, nor to the time within which proceedings may be commenced to establish the Contractor's liability with respect to his obligations other than specifically to correct the work.

13.3 ACCEPTANCE OF DEFECTIVE OR NON-CONFORMING WORK

13.3.1 If the Owner prefers to accept defective or non-conforming work, he may do so instead of requiring its removal and correction, in which case a Change Order will be issued to reflect a reduction in the Contract Sum where appropriate and equitable. Such adjustment shall be effected whether or not final payment has been made.

ARTICLE 14

TERMINATION OF THE CONTRACT

14.1 TERMINATION BY THE CONTRACTOR

14.1.1 If the work is stopped for a period of thirty days under an order of court or other public authority having jurisdiction, or as a result of an act of government, such as a declaration of a national emergency making materials unavailable, through no act or fault of the Contractor or a Sub-contractor or their agents or employees or any other persons performing any of the work under a contract with the Contractor because the Owner's Representative has not issued a Certificate for payment as provided in Paragraph 9.7 or because the Owner has not made payment thereon as provided in paragraph 9.7, then the Contractor may, upon seven additional days' written notice to the Owner and the Owner's Representative, terminate the Contract and recover from the Owner payment for all work executed and for any proven loss sustained upon any materials, equipment, tools, construction equipment and machinery, including reasonable profit and damages.

14.2 TERMINATION BY THE OWNER

14.2.1 If the Contractor is adjudged bankrupt, or if he makes a general assignment for the benefit of his creditors, or if a receiver is appointed on account of his insolvency, or if he persistently or repeatedly refuses or fails, except in cases for which extension of time is provided, to supply enough properly skilled workmen or proper materials, or if he fails to make prompt payment to Subcontractors for material of labor, or persistently disregards laws, ordinances, rules, regulations, or orders of any public authority having jurisdiction, or otherwise is guilty of a substantial violation of a provision of the Contract Documents, then the Owner, upon certification by the Owner's Representative that sufficient cause exists to justify such action, may without prejudice to any right or remedy and after giving the Contractor and his surety, if any, seven days written notice, terminate the employment of the Contractor and take possession of the site and of all material, tools, construction equipment and machinery thereon owned by the Contractor and may finish the work by whatever method he may deem expedient. In such case, the Contractor shall not be entitled to receive any further payment until the work is finished.

14.2.2 If the unpaid balance of the Contract Sum exceeds the costs of finishing the work, including compensation for the Owner's Representative's additional services made necessary thereby, and any damages sustained by the Owner as a result of the Contractor's breach, such excess shall be paid to the Contractor. If such costs exceed the unpaid balance, the Contractor shall pay the difference to the Owner. The amount to be paid to the Contractor or to the Owner, as the case may be, shall be certified by the Owner's Representative upon application, in the manner provided in paragraph 9.4 and this obligation or to the Owner, as the case may be, shall be certified by the Owner's Representative upon application, in the manner provided in Paragraph 9.4 and this obligation for payment shall survive the termination of the Contract.

14.2.3 In the event that the Project is abandoned by the Owner, the Owner may terminate this contract at any time by giving at least seven (7) day notice to the Contractor. In the event of termination, all work completed shall become the property of the Owner. The Contractor shall be entitled to receive compensation for actual work satisfactorily completed hereunder, including reimbursable expenses authorized by the Owner which are then due.

14.2.4 In the event the Contractor fails to perform the work in accordance with the Contract Documents, the Owner may terminate the Contract after giving the Contractor five (5) working days notice.

ARTICLE 15

EQUAL OPPORTUNITY

15.1 The Contractor shall maintain policies of employment as follows:

15.1.1 The Contractor, all Subcontractors, and all Sub-subcontractors shall not discriminate against any employee or applicant for employment because of race, religion, color, sex or national origin. The Contractor shall take affirmative action to ensure that applicants are employed and that employees are treated during employment, upgrading, demotion, or transfer; recruitment or recruitment advertising; layoff or termination; rates of pay or other forms of compensation; and selection for training, including apprenticeship. The Contractor agrees to post in conspicuous place, available to employees and applicants for employment, notices setting forth the policies of non-discrimination.

15.1.2 The Contract, all Subcontractors, and all Sub-subcontractors shall, in all solicitation or advertisements for employees placed by them or on their behalf, state that all qualified applicant will receive consideration for employment without regard to race, religion, color, sex, or national origin.

ARTICLE 16

MINIMUM WAGE RATES

16.1 The Contractor warrants and agrees that he and all Subcontractors and Sub-subcontractors shall comply with all applicable provisions of the New Mexico Public Works Minimum Wage Act as outlined in the Contract Documents. Wage rates are not applicable to projects costing less than $60,000.00. Both the State of New Mexico Wage Rate Decision and the applicable Federal wage rates are included in this document.

SUPPLEMENTARY CONDITIONS
(00 7300)

(00 7301) CITY OF SANTA FE REQUIREMENTS

Document is intended to be used in conjunction with the General Conditions of the Contract.

ADDITIONAL CONDITIONS

1.0 DEFINITIONS - The following definitions shall apply through the Bidding Documents or Contract Documents unless otherwise specified.

1.1 ADDENDUM: Written or graphic instrument issued prior to the execution of the Contract which modifies or interpret the Bidding Documents, including Drawings and Specifications, by additions, deletions, clarifications, or corrections. Addenda will become part of the Contract Documents when the Construction Contract is executed. Plural: ADDENDA

1.2 ADDITIVE OR DEDUCTIVE ALTERNATE BID: Amount stated in the Bid to be added or deducted from the amount of the Base Bid if the corresponding change in project scope or alternate materials and/or methods of construction is accepted.

1.3 BASE BID: Amount of money stated in the Bid as the sum for which the Bidder offers to perform the work, not including that work for which Alternate Bids are also submitted.

1.4 BID: A complete and properly signed proposal to do the work or designated portion thereof for the sums stipulated therein, supported by data called for by the Bidding Documents.

1.5 BID LOT: A major item of work for which a separate quotation or proposal is requested.

1.6 BIDDER: One who submits a Bid for a Prime contract with the Owner, as distinct from a Subcontractor, who submits a Bid to a Bidder. Technically, a Bidder is not a Contractor on a specific project until a contract exists between him and the Owner.

1.7 BIDDING DOCUMENT: Documents that include the Invitation for Bid, Instructions to Bidders, the Bid Form, other sample bidding and contract forms, and the proposed Contract Documents, including any Addenda issued prior to receipt of Bids. The Contract Documents proposed for the work consist of the Owner-Contractor Agreement, the Conditions of the Construction Contract (General, Supplementary, and Other Conditions), the Drawings, the Specifications, and all Addenda issued prior to and all Modifications issued after execution of the Contract.

1.8 DAY: Calendar day, which is every day shown on the calendar, beginning and ending at midnight.

1.9 CENTRAL PURCHASING OFFICE: The Central Purchasing Office is the City of Santa Fe Purchasing Department.

1.10 GOVERNING AUTHORITY: The Governing Board of the City of Santa Fe for the execution of construction contracts is the Mayor and City Manager.

1.11 INVITATION FOR BID: The Bidding Documents utilized for soliciting sealed Bids. "Invitation to Bid" shall have the same meaning as "Invitation for Bid".

1.12 OWNER: The City of Santa Fe, New Mexico.

1.13 PROCUREMENT OFFICER: The Director of the Purchasing Division, or a designee authorized to enter into or administer contracts and make written determination with respect thereto.

1.14 RESPONSIBLE BIDDER: A Bidder who submits a responsive Bid and who has furnished, when required, information and data to prove that his financial resources, production or service facilities, personnel, service reputation, and experience are adequate to make satisfactory delivery of the services, construction, or items of tangible personal property described in the Bidding Documents (13-1-82, NMSA 1978).

1.15 SUCCESSFUL BIDDER: The lowest qualified and responsible Bidder to whom the Owner, on the basis of the Owner's evaluation, makes an award.

1.16 UNIT PRICES: Amounts stated in the Contract as prices per unit of measurement for materials or services as described in the Contract Documents.

1.17 USER: The City of Santa Fe or agencies or designated entity for whose use the Project is being constructed.

2.0 CONTRACT AUDIT

The Owner shall be entitled to audit the books and records of a Contractor or any Subcontractor under any negotiated contract or subcontract other than a firm fixed-price contract to the extent that such books and records relate to the performance of such contract or subcontract. Such books and records shall be maintained by the Contractor for a period of three years from the date of final payment under the prime contract and by the Subcontractor for a period of three years from the date of final payment under the subcontract unless a shorter period is otherwise authorized in writing (13-1-161, NMSA 1978).

3.0 DEBARRED OR SUSPENDED CONTRACTORS

A business (Contractor, Subcontractor, or Supplier) that has either been debarred or suspended pursuant to the requirements of Sections 13-1-177 through 13-1-180, and 13-4-11 through 13-4-17, NMSA 1978, shall not be permitted to do business with the State and shall not be considered for award of contract during the period for which it is debarred or suspended.

4.0 BRIBES, GRATUITIES, AND KICK-BACKS

4.1 It is illegal in the State of New Mexico for any public employee to solicit or accept anything of value in connection with award of this Bid and for any person to offer or pay anything of value to any such public employee (30-24-1 through 30-24-2, NMSA 1978).

4.2 Pursuant to Section 13-1-191, NMSA 1978, reference is hereby made to the Criminal Laws of New Mexico (including 30-24-1, 30-23-2, and 30-41-1 through 3-41-3, NMSA 1978), which prohibit bribes, kick-backs, and gratuities and violation of which constitutes a felon. Further, the Procurement Code (13-1-28 through 13-1-199, NMSA 1978), imposes civil and criminal penalties for its violation

5.0 PROTESTS

5.1 Any Contractor who is aggrieved in connection with a procurement may protest to the City Purchasing Agent and the Owner. The protest should be made in writing within twenty-four (24) hours after the facts or occurrences; giving rise thereto, but in no case, less that within fifteen (15) calendar days after the facts or occurrences giving rise thereto (13-1-173, NMSA 1978).

5.2 In the event of a timely protest under Section 5.1 (13-1-172 of the Procurement Code, NMSA 1978), the City Purchasing Agent and the Owner shall not proceed further with the procurement unless the State Purchasing Agent or the Owner makes a determination that the award of contract is necessary to protect substantial interests of the Owner (13-1-173, NMSA 1978).

5.3 The City Purchasing Agent or his designee shall have the authority to take any action reasonably necessary to resolve a protest of an aggrieved Contractor concerning a procurement.

5.4 This authority shall be exercised in accordance with adopted regulations, but shall not include the authority to award money damages or attorneys' fees (13-1-174, NMSA 1978).

5.5 The City Purchasing Agent or his designee shall promptly issue a determination relating to the protest. The determination shall:

A) State the reasons for the action taken; and,

B) Inform the protestant of the right to judicial review of the determination pursuant to Section 13-1-183, NMSA 1978 (13-1-175, NMSA 1978).

5.6 A copy of the determination issued under Section 13-1-175, NMSA 1978, shall be mailed immediately to the protestant (13-1-176, NMSA 1978).

6.0 CONTRACT BOND REQUIREMENTS

6.1 The Successful Bidder, where the Contract Price exceeds twenty five thousand dollars ($25,000), shall post a one hundred percent (100%) Performance Bond and a one hundred percent (100%) Labor and Material Payment Bond. Bonds shall be executed on Performance Bond and Labor and Material Payment Bond forms attached hereto, with amount payable conforming to the terms of the contract. Surety shall be a company licensed to do business in the State of New Mexico and acceptable to the Owner.

6.2 Personal sureties may be accepted if the Owner so determines in advance, but in such case the amount of the Bond shall be the full Contract Price, and the sureties shall justify under oath in amounts above liabilities and exemptions aggregating double the amount of the Bond.

6.3 Special attention of Bidders is called to the requirements of Section 13-4-18 through 13-4-20, NMSA 1978 regarding a Contractor who does not have his principal place of business in the State of New Mexico for all taxes due arising out of construction services rendered under the Contract.

6.3.1 The right to sue on this Bond accrues only to the Owner and the parties to whom Sections 13-4-18 through 13-4-20, NMSA 1978 grant such right; and any such right shall be exercised only in accordance with the provisions and limitations of said statues.

7.0 NON-RESIDENT CONTRACTOR'S REQUIREMENTS REGARDING GROSS RECEIPTS TAX SURETY BOND

7.1 Section 7-1-55A, NMSA 1978 provides that any person (as defined in Section 7-1-3, NMSA 1978) engaged in the construction business who does not have his principal place of business in New Mexico and enters into a prime construction contract to be performed in this State shall, at the time such contract is entered into, furnish the Director of the Revenue Division, Taxation and Revenue Department, or his delegate with a surety bond or other acceptable security in a sum equivalent to the gross receipts to be paid under the contract multiplied by the applicable rate of the gross receipts tax imposed by Section 7-9-4, NMSA 1978 to secure payment of the tax imposed on the gross receipts from the contract, and shall obtain a certificate form the Director of the Revenue Division, Taxation and Revenue Department, or his delegate that the requirements of this paragraph have been met.

7.2 If the total sum to be paid under the contract is changed by ten percent or more after the date the surety bond or other acceptable security is furnished, to the Director or his delegate, such person shall increase or decrease, as the case may be, the amount of the bond or security within fourteen days after the change (7-1-55B, NMSA 1978).

7.3 In addition to the above requirements, the Contractor will be subject to all the requirements of the City Procurement Code.

8.0 CONTRACTOR'S GROSS RECEIPTS TAX REGISTRATION

8.1 Section 7-10-4, NMSA 1978 provides that any person (as defined in Section 7-10-3, NMSA 1978) performing services for the City of Santa Fe, as those terms are used in the Gross Receipts and Compensating Tax Act (Section 7-10-1 to 7-10-5, NMSA 1978), must be registered and be issued an identification number with the Revenue Division of the Taxation and Revenue Department to pay the gross receipts tax.

8.2 The identification number is needed to properly complete the approval process of the contract; therefor, so as to cause no delay in the processing, the Contractor must register with the State of New Mexico, Taxation and Revenue Department. For information contact:

Revenue Division
Taxation and Revenue Department
1100 South St. Francis Drive
Santa Fe, New Mexico 87504
(505)827-0700

8.3 If any person who performs services for the City of Santa Fe is not registered to pay the gross receipts tax, the City shall withhold payment of the amount due until the person has presented evidence of registration with the Revenue Department to pay the gross receipts tax.

9.0 CONTRACT WITH NONRESIDENT PERSON OR PARTNERSHIPS OR UNADMITTED FOREIGN CORPORATIONS; AGENT FOR SERVICE OF PROCESS

9.1 Special attention of Bidders is called to requirements of Sections 13-4-21 through 13-4-24, NMSA 1978, whereby a public works contract with a nonresident person or partnership or foreign corporation not authorized to do business in the State shall contain a specific provision designating an agent resident within the State, and his address, upon whom process and writs in any action or proceeding against such business may be served in any action arising out of such contract.

11.0 STATE ALLOWANCES

11.1 The Contractor shall purchase the "Allowed Materials" as directed by the Owner through the Landscape Owner's Representative on the basis of the lowest and the best Bid of at least three competitive Bids. If the actual price for purchasing the "Allowed materials" is more or less than the "Cash Allowance", the Contract Price shall be adjusted accordingly. The adjustment in Contract Price made on the basis of the purchase price without additional charges for overhead, profit, insurance, or any other incidental expenses. The cost of installation of the "Allowed Materials" shall be included in the applicable section of the Specifications covering the work.

12.0 MINIMUM WAGE RATES

12.1 The Minimum Wage Rate Determinations for this Project are shown in this section. This project is subject to New Mexico State Wage Rate Decision No. SF-13-0607-B, if the amount of the base bid is equal to or greater than $60,000.

13.0 FORM OF CHANGE ORDER AND CHANGE ORDER NOTICE TO PROCEED

13.1 The forms issued by the Owner are to be utilized by the Contractor, Landscape Owner's Representative, and the Owner pursuant to the requirements of the General Conditions.

14.0 STATE OF NEW MEXICO STATE INDUSTRIES DIVISION

14.1 The Contractor, at his own expense, shall secure the required building permits from the State CID as required for this Project. Contractor shall adhere to the requirements established for inspections.

15.0 CITY OF SANTA FE REQUIREMENTS

15.1 The General Contractor shall include in the Bid the cost of all landfill dumping fees; additionally, the General Contractor shall be responsible that all rubble, excess materials, etc., are disposed of at an approved, legal dumping site.

15.2 The Contractor shall account for existing conditions affecting the work and the schedule and shall consult and coordinate with the Owner as applicable and make advance and timely provisions for these accordingly.

15.3 The Contractor shall coordinate with the Owner and provide for any temporary on-site facilities, staging or storage areas required for performance of the work.

15.4 The Contractor shall make advance and timely provisions for Large vehicle, crane, lift and special access, etc. to and on the site and conduct any necessary special coordination to facilitate this work and limit its impact , to the extent possible, on existing conditions and facility operations.

15.5 The Contractor shall take all reasonable precautions and make any provisions necessary to protect existing building features and conditions for the duration of the work and shall coordinate with Facilities and GCCC Staff to determine these measures as appropriate.

15.6 The Contractor shall make reasonable provisions to insure that the environments in areas of the facility that are in active use, remain free from excessive noise, dust, fumes and the like during periods of work.

15.7 The Contractor shall make reasonable efforts to contain the impact of work performance on daily facility operations and to prevent unnecessary contact of the Contractor's laborers, representatives and the like with patrons of the facility.

15.8 The Contractor shall coordinate with Facilities and GCCC Staff to determine provisions for temporary power, other temporary utilities or services that may be required to complete the work. If existing on-site amenities are determined insufficient, the Contractors shall provide these as necessary to complete the work as required.

15.9 The Contractor shall provide and maintain portable Chemical Toilet(s) on site for the duration of the work for use by the Contractor, sub-contractors, vendors, suppliers, inspectors and authorized City Staff. These toilet facilities shall be secured during non-work hours and shall be located as approved by the Owner. The Contractor shall not utilize existing facility amenities for personal use during performance of the work.

15.10 Work areas, and specifically pool area surfaces shall remain entirely free of debris and tools during non-work hours. Any rust or other stains induced by sitting tools, equipment or debris are of particular concern. Materials, tools and equipment shall not be stored in the Natatorium other than as specifically approved by the Owner and with necessary precautions in place.

15.11 The Contractor shall provide reasonable access to Facilities and GCCC Staff or other authorized vendors for any necessary periodic maintenance, repair and monitoring of the facility and systems that may be located in the area(s) of work.

15.12 The Contractor shall coordinate with Facilities and GCCC Staff to determine access locations and parameters required for the work. These shall be maintained for the duration of the work unless otherwise authorized by the Owner.

15.13 The Contractor shall coordinate with the Owner in a timely manner in advance of any work requiring temporary closure or downtime of the facility, an area of the facility or of any utilities and systems.

(00 7343) MINIMUM WAGE RATES & CITY LIVING WAGE

New Mexico Department of Workforce Solutions
Public Works
121 Tijeras Ave. NE, Suite 3000, Albuquerque, NM 87102
Phone: (505)-841-4400 fax to: (505) 841-4424 or Email to: public.works@state.nm.us

Wage Decision **# SF-15-0086 B**

NOTIFICATION OF AWARD (NOA)

THIS WAGE DECISION # EXPIRES FOR BIDS ON **05/20/15**

***Description and Location of Work*:** Chavez Center (GCCC) Pool Dehumidification System Remodeling
The facility Natatorium HVAC & mechanical system will receive remodeling and improvements to equipment, duct work, office

City of Santa Fe County of Santa Fe 3221 W. Rodeo Road

REMINDER for Agency Conducting BID Process:
After the Contracting Agency awards this project the Wage Rate Poster, Sub-List and the Project Requirement Document, excluding this NOA must be delivered to the ***GENERAL/PRIME CONTRACTOR.*** The Contracting Agency or its agent must complete this form and submit with the sub-list listing all of the subcontractors including all tiers of subcontractors and fax or email it to the address above. ***If the project is canceled,*** this form must be completed by the Contracting agency conducting the bid process and the wording "Cancelled" written on the form and send to the Labor Relations Division. Failure to submit the NOA in a timely manner is a violation of paragraph 11.1.2.9.B (3) of the Public Works Minimum Wage Act Policy Manual.

General/Prime Contractor Company Name:_____ License#:_____

Address:_____ City:_____ State:_____ Zip:_____

Telephone: _____ Fax:_____

Project Contact's name:_____E-Mail:_____

Approximate Date Work to Start:_____

Estimated Completion Date:_____

Estimated Cost of Project:_____

Bid Opening Date:_____

Note: The General/Prime Contractor **MUST** mail/fax in their Statement of Intent to Pay Prevailing Wages to the Contracting Agency or its agent before beginning work on the project. Each Subcontractor (and all tiers of subcontractors) **MUST** also mail/fax their Statement of Intent to Pay Prevailing Wages to the General/Prime Contractor 3 days after award of project. After work on the project is completed **and before, final payment,** is made to subcontractors and all tiers of subcontractors, the contractor and sub-contractors must mail/fax their Affidavit of Wages paid to the Contracting Agency for final payment.

Signature for Contracting Agency (or agent) _____
Printed Name_____
Email address for Contracting Agency (not agent)_____Required Field
Date _____

8/29/13

SUBCONTRACTOR LIST

DO NOT list suppliers or professional services (such as surveyors)

INCLUDE individual subcontractor dollar amount for project

Email to: public.works@state.nm.us or fax to: (505) 841-4424

Please include **2nd & 3rd Tier** subcontractors. Make extra copies of form if necessary.

Wage Decision. # **SF-15-0086 B**

General Contractor:_____

Company Name:_____
Address:_____City:_____State:____Zip:_____
E-Mail Address:_____ License No.:_____
Phone No.:_____Fax No.:_____ Sub ____ 2nd TIER ____ 3rd TIER ___
(To Whom) **(To Whom)**
Work to be performed: Start Date: Amount ($):

Company Name:_____
Address:_____City:_____State:____Zip:_____
E-Mail Address:_____ License No.:_____
Phone No.:_____Fax No.:_____ Sub ____ 2nd TIER ____ 3rd TIER ___
(To Whom) **(To Whom)**
Work to be performed: Start Date: Amount ($):

Company Name:_____
Address:_____City:_____State:____Zip:_____
E-Mail Address:_____ License No.:_____
Phone No.:_____Fax No.:_____ Sub ____ 2ne TIER ____ 3rd TIER ___
(To Whom) **(To Whom)**
Work to be performed: Start Date: Amount ($):

Company Name:_____
Address:_____City:_____State:____Zip:_____
E-Mail Address:_____ License No.:_____
Phone No.:_____Fax No.:_____ Sub ____ 2nd TIER ____ 3rd TIER ___
(To Whom) **(To Whom)**
Work to be performed: Start Date: Amount ($):

Company Name:_____
Address:_____City:_____State:____Zip:_____
E-Mail Address:_____ License No.:_____
Phone No.:_____Fax No.:_____ Sub ____ 2nd TIER ____ 3rd TIER ___
(To Whom) **(To Whom)**
Work to be performed: Start Date: Amount ($):

Company Name:_____
Address:_____City:_____State:____Zip:_____
E-Mail Address:_____ License No.:_____
Phone No.:_____Fax No.:_____ Sub ____ 2ne TIER ____ 3rd TIER ___

Work to be performed:	Start Date:	**(To Whom)** Amount ($):	**(To Whom)**

Chavez Center (GCCC) Pool Dehumidification System Remodeling : Wage Decision #SF-15-0086 B

The facility Natatorium HVAC & mechanical system will receive remodeling and improvements to equipment, duct work, office AC,roof top exhaust fans and associated work

Type "B" - GENERAL BUILDING Effective January 1, 2015

Trade Classification	Base Rate	Fringe Rate	Apprenticeship	Subsistence & Incentive Rates
Asbestos Worker - Heat & Frost Insulator	27.35	10.23	$0.56	
Boilermaker	18.40	3.78	$0.56	
Bricklayer/Blocklayer/Stonemason	22.85	6.00	$0.56	
Carpenter/Lather	20.86	6.25	$0.56	
Cement Mason	17.72	7.45	$0.56	
Electricians				
Outside Classifications				
Groundman	22.32	8.62	$0.56	
Equipment Operator	25.14	8.62	$0.56	
Lineman/Tech	25.73	8.62	$0.56	
Cable Splicer	26.91	8.62	$0.56	
Inside Classifications				
Wireman/Technician	27.80	8.06	$0.56	**Refer to Note 1**
Cable Splicer	29.53	8.06	$0.56	
Sound Classifications				
Installer	23.39	8.31	$0.56	
Technician	24.94	8.31	$0.56	
Soundman	27.01	8.31	$0.56	
Elevator Constructor	33.61	14.99	$0.56	
Elevator Constructor Helper	15.55	3.56	$0.56	
Glazier	20.15	4.15	$0.56	
Ironworker	25.00	10.00	$0.56	**Refer to Note 2**
Painter (Brush/Roller/Spray)	16.60	3.88	$0.56	
Paper Hanger	19.71	8.42	$0.56	
Drywall Finisher/Taper	19.64	3.91	$0.56	
Plasterer	18.65	7.15	$0.56	
Plumber/Pipefitter	28.30	11.00	$0.56	**Refer to Note 3**
Roofer	15.18	0.50	$0.56	
Sheetmetal Worker	26.56	13.41	$0.56	**Refer to Note 4**
Soft Floor Layer	20.74	4.40	$0.56	
Sprinkler Fitter	24.41	11.27	$0.56	
Tile Setter	14.80	1.20	$0.56	
Tile Setter Helper	13.00	1.02	$0.56	
Laborers				
Group I	15.04	4.25	$0.56	
Group II	15.61	4.25	$0.56	
Group III	15.91	4.25	$0.56	
Group IV	16.01	4.25	$0.56	
Group V	16.21	4.25	$0.56	
Group VI	16.36	4.25	$0.56	
Operators				
Group I	28.03	5.16	$0.56	
Group II	29.07	5.16	$0.56	
Group III	29.15	5.16	$0.56	
Group IV	29.21	5.16	$0.56	
Group V	29.27	5.16	$0.56	
Group VI	29.37	5.16	$0.56	
Group VII	29.47	5.16	$0.56	
Group VIII	30.55	5.16	$0.56	
Truck Drivers				
Group I	20.56	5.34	$0.56	
Group II	20.68	5.34	$0.56	
Group III	20.76	5.34	$0.56	
Group IV	20.88	5.34	$0.56	
Group V	20.93	5.34	$0.56	
Group VI	21.03	5.34	$0.56	
Group VII	21.13	5.34	$0.56	
Group VIII	21.27	5.34	$0.56	
Group IX	21.42	5.34	$0.56	

NOTE: SUBSISTENCE AND INCENTIVE RATES BY TRADE & LOCATION

#1 - Inside Electricians working at a Los Alamos County job site get $4.10/hr. subsistence pay plus base/fringe. Inside Electricians working at a Lea Co. job site get $75.00/day subsistence pay plus base/fringe.

#2 - Ironworkers working on projects 50+ miles over the most direct regularly traveled route from Albuquerque, or the employee's home, whichever is closer, shall be paid $5.00/hr. subsistence plus base/fringe. The "Big I" Interchange in Albuquerque, or the employee's home, respectively shall be used as basing points. The current State of New Mexico Official Highway Map shall be the reference for routes and distances. All of Santa Fe County shall be $5.00/hr subsistence area.

#3 - Plumbers/Pipefitters working at a Los Alamos County job site get $.80/hr. incentive pay plus base/fringe.

#4 - Sheet Metal Workers working at a Los Alamos County job site get $2.00/hr. incentive pay plus base/fringe.
#4 - Sheet Metal Workers living 60+ miles from a San Juan County job site get $3.00/hr. subsistence pay plus base/fringe. Sheet Metal Workers working 90+ miles from Contractors Homebase & employees home get $50.00/day subsistence pay plus base/fringe regardless of county.

SUSANA MARTINEZ
GOVERNOR

JOHN SANCHEZ
LT. GOVERNOR

CELINA BUSSEY
SECRETARY

STATE OF NEW MEXICO
DEPARTMENT OF WORKFORCE SOLUTIONS
121 Tijeras Ave NE Suite 3000
Albuquerque, NM 87102
Telephone (505) 841-4405
Fax (505) 841-4424

PUBLIC WORKS PROJECT REQUIREMENTS

As a participant in a Public Works project valued at more than $60,000 in the State of New Mexico, the following list addresses many of the responsibilities that are assigned by statute to each project stakeholder.

Contracting Agency

- Ensure that all contractors/prime contractors wishing to bid on a Public Works project when the project is $60,000 or more are actively registered with the Labor Relations Division, Labor Enforcement Fund (LEF) prior to bidding.
- Provide completed Notice of Award (NOA) and Sub-Contractor list to Labor Relations Division promptly after the project is awarded.
- Provide updates to the Sub-Contractor list to the Labor Relations Division

General Contractor

- Provide to the Contracting Agency within 3 (Three) days of award a complete sub-contractor list and Statements of Intent (SOI) to pay Prevailing Wages for each contractor.
- Ensure that all sub-contractors wishing to bid on a Public Works project when their portion is over $60,000 are actively registered with the Labor Relations Division prior to bidding.
- Submit bi-weekly certified payrolls to the owner/contracting agency.
- Make certain NM Apprenticeship and Training Fund payments are to be paid either to an approved Apprenticeship program or to the Labor Relations Division.
- Confirm the Wage Rate poster, provided by the Labor Relations Division, is displayed at the job site in an easily accessible place.
- Make sure, when a project has been completed, the Affidavits of Wages Paid (AWP) is sent to the Contracting Agency.

Sub-Contractor

- Ensure that all sub-contractors wishing to bid on a Public Works project when their portion is over $60,000 are actively registered with the Labor Relations Division prior to bidding.
- Submit bi-weekly certified payrolls to the General Contractor(s).
- Make certain NM Apprenticeship and Training Fund payments are to be paid either to an approved Apprenticeship program or to the Labor Relations Division.

Additional Information

Reference material and forms for these requirements are available through the following New Mexico Workforce Solutions Web Link.
www.dws.state.nm.us/new/Labor_Relations/publicworks.html.

Additional Information

Additional information, requirements, and documents on these topics can be found through the Public Works web pages.

- Labor Enforcement Fund (LEF)
- Weekly Certified Payroll
- Public Works Apprenticeship and Training Fund (PWAT)
- Forms: Statement of Intent (SOI), Affidavit of Wages Paid (AWP)
- Prevailing Wage Rates (Base Rates, Fringe, and Apprenticeship Contributions)

CONTACT INFORMATION

Contact us for any questions relating to Public Works Projects.

Kim Kew Kim.Kew@state.nm.us or 505-841-4405
Otis Caddy LynnO.Caddy@state.nm.us 505-841-4406
Stacey Lowrey Stacey.Lowrey@state.nm.us 505-841-4412
Violet Miera Violet.Miera2@state.nm.us 505-841-4418

City of Santa Fe

Living Wage Ordinance

Ordinance Number §28-1-28-1.12DSFCC 1987

Purpose:

The City of Santa Fe Living Wage Ordinance was adopted to establish minimum hourly wages.

Who it affects:

- All profit and nonprofit businesses required to have a business license or business registration with the City of Santa Fe.

Compliance:

- Affected businesses are required to pay employees an hourly wage of $10.66 effective March 1, 2014.
- Beginning January 1, 2009, and each year thereafter, the minimum wage shall be adjusted upward by an amount corresponding to the previous year's increase, if any, in the Consumer Price Index for the Western Region for Urban Wage Earners and Clerical Workers.
- For workers who customarily receive more than $100 per month in tips or commissions, any tips or commissions received and retained by a worker shall be counted as wages and credited toward satisfaction of the minimum wage provided that, for tipped workers, all tips received by such workers are retained by the workers, except that the pooling of tips among workers shall be permitted.
- The value of health care benefits and child care shall be considered as an element of wages.
- Nonprofit organizations whose primary source of funds is from Medicaid waivers are ***exempt.***

Prohibitions against retaliation and circumvention:

- It shall be unlawful for any business, employer or employer's agent or representative to take any action against an individual in retaliation for exercising or communicating rights under this ordinance. This includes retaliation against individuals who mistakenly but in good faith allege noncompliance with the ordinance.
- Taking adverse action against an individual within 60 days of the individual's assertion of or communication of information regarding rights raises a reputable presumption of retaliation for assertion of rights.
- It shall be unlawful for any business or employer to intentionally circumvent the requirements of this ordinance by contracting portions of its operations or leasing portions of its property.

Enforcement and Remedies:

- Administrative Enforcement—The city manager, or his/her designee, is authorized, as appropriate and as resources permit, to enforce this ordinance.
- Criminal Penalty—A person violating this ordinance shall be guilty of a misdemeanor and, upon conviction, for each offense may be subject to fines and imprisonment as set forth in Section 1-3 SFCC 1987. A person violating any of the requirements of this ordinance shall be guilty of a separate offense for each day or portion thereof and for each worker or person to whom any such violation occurred.
- Other Remedies—The city, any individual aggrieved by a violation of this ordinance, or any entity the members of which have been aggrieved by a violation of this ordinance, may bring a civil action in a court of competent jurisdiction to restrain, correct, abate or remedy any violation of this ordinance and, upon prevailing, shall be entitled to such legal or equitable relief as may be appropriate to remedy the violation including, without limitation, reinstatement, the payment of any wages due and an additional amount as liquidated damages equal to twice the amount of any wages due, injunctive relief, and reasonable attorney's fees and costs.

Nonexclusive Remedies and Penalties—The remedies provided in this section are not exclusive, and nothing in this ordinance shall preclude any person from seeking any other remedies, penalties, or relief provided by law.

Posting and Publication:

- Any business subject to the provisions of this ordinance shall as a condition to obtaining and holding a City of Santa Fe business license or registration, post and display in a prominent location next to its business license or registration on the business premises a notice, in English and Spanish, that the business is in compliance with the provisions of this ordinance and post the text of this notice. Failure to comply with this section shall be construed a violation of this ordinance and, in addition, shall be considered grounds for suspensions, revocation, or termination of the business license or registration.

For more information, please contact: Constituent Services at 505-955-6949 Email: constituentservices@santafenm.gov

Municipalidad de Santa Fe

Ordenanza Respecto al Sueldo Mínimo

Ordenanza Numero §28-1 28-1.12 SFCC 1987

Propósito:
La ordenanza respecto al Sueldo Mínimo fue adoptada por la municipalidad de Santa Fe con el fin de establecer un sueldo mínimo que determinadas empresas tienen que pagar.

A Quién Afecta la Ordenanza:
• A toda empresa con o sin fines de lucro se require que tenga una licencia comercial o estar registrada con la municipalidad de Santa Fe.

Cómo Se Tiene que Cumplir lo que Dispone la Ordenanza:
• A partir del día primero de marzo del 2014, las empresas que tienen que pagar el sueldo mínimo tienen la obligación de pagar un sueldo de $10.66 a la hora.
• A partir del día primero de enero del 2009, y cada año que sigue, el sueldo mínimo será ajustado de acuerdo con la inflación.
• Para trabajadores/as que regularmente reciben propinas o comisiones que sumen más de $100 por mes, todas esas propinas o comisiones que reciban contarán como si fueran sueldo y serán acreditadas para satisfacer la ordenanza, siempre y cuando los trabajadores se queden con todas sus propinas. También se permitirá acreditar propinas que se juntan ye se comparten.
• El valor de beneficios de seguro médico y de cuidado de niños se considerará como parte del sueldo mínimo.
• Las organizaciones sin fines de lucro que reciben la mayoría de sus fondos de *(Medicaid)* no tienen que pagar el sueldo mínimo de la ciudad.

Se Prohíben Represalias o Evasiones:
• Es en contra de la ley que una empresa o persona que emplea trabajadores o que el apoderado o persona que representa a la empresa tome represalias en contra del trabajador porque el o ella ejerce sus derechos o comunica sus derechos a otra persona. También es en contra de la ley tomar represalias contra un trabajador que erróneamente, pero de buena fe, alega que la empresa no ha cumplido con la ordenanza.
• Se presume como represalia, tomar cualquier acción dentro de los 60 días después de que un individuo quiso ejercer sus derechos.
• Es en contra de la ley que un empresario o empleador intencionalmente trate de evadir los requisitos de esta ordenanza contratando parte de su negocio a otra empresa o rentando partes de su propiedad, con el fin de no cumplir con la ordenanza.

Remedios Legales Para Implementar la Ley:
• Medidas Administrativas - El Administrador de la cuidad o su representante está autorizado a hacer cumplir la ordenanza hasta donde los recursos lo permitan.
• Castigo Judicial - El empleador que no cumpla con esta ordenanza será condenado por cada infracción. Pudiera estar sujeto a multas o encarcelamiento según dispone la sección 1-3 del Código Civil de Santa Fe de 1987. El empleador que no cumpla cualquiera de los requisitos en esta ordenanza será culpable de una infracción por cada trabajador afectado, por cada día o parte del día que no se cumpla la ordenanza.
• Ostros Recursos Judiciales - La Municipalidad de Santa Fe, cualquier individuo o cualquier grupo de individuos que han sido afectados porque no se cumplió la ordenanza, podrán presentar una queja en la corte civil que tiene jurisdicción para restringir, corregir, suprimir, o remediar toda infracción de esta ordenanza. La persona que gane el caso tiene derecho a un remedio legal o equitativo que sea adecuado para remediar la violación. Los remedios incluyen y sin limitar, que lo/la vuelvan a emplear, que le paguen el sueldo que le deben más una cantidad por daños determinados que son el igual a doble cantidad del sueldo que le deben, protección judicial y cuotas razonables que cobra el abogado más costos del caso.

Remedios Legales, Daños y Perjuicios No Exclusivos Los remedios legales en esta sección no son exclusivos. Eso quiere decir que esta ordenanza no prohíbe que el trabajador trate de plantear otros remedios en la corte, demandar por daños y perjuicios que la ley permite.

Colocación de Anuncios y Publicación de los Anuncios:
• Como condición para obtener y mantener una licencia o registro comercial toda empresa tendrá que colocar en un lugar prominente al lado de su licencia o registro en el lugar de trabajo este aviso en inglés y en español indicando que el negocio esta cumpliendo con la ordenanza y con el texto de este aviso. Si la empresa no cumple lo que esta sección ordena se considerará como violación a esta ordenanza y se podrá suspender, revocar o dar por terminada la licencia o registro de la empresa.

Para obtener más información, favor de comunicarse con la oficina de: Constituent Services al número 505-955-6949 o por correo electrónico a: constitutentservices@santafenm.gov.

CITY OF SANTA FE

SPECIFICATIONS

CIP #507N – GENOVEVA CHAVEZ COMMUNITY CENTER (GCCC) NATATORIUM DEHUMIDIFICATION SYSTEM REMODELING

INDEX TO SPECIFICATIONS: DIVISIONS 1-26

Division 01- General Requirements

Summary of Work	**01 0100**
Cutting and Patching	**01 0700**
Base Bid Alternates	**01 1020**
Project Meetings	**01 2000**
Construction Schedules	**01 3100**
Shop Drawings, Product Data and Samples	**01 3400**
Temporary Facilities and Controls	**01 5000**
Substitutions	**01 6400**
Contract Closeout	**01 7000**
Cleaning	**01 7100**
Project Record Documents	**01 7200**

Division 05 – Metals

Structural Steel Framing	**05 1200**

Division 23- Heating, Ventilating, and Conditioning (HVAC)

Common Work Results for HVAC	**23 0500**
Pipe and Tubes for HVAC Piping and Equipment	**23 0503**
General Duty Valves for HVAC Piping	**23 0523**
Testing, Adjusting and Balancing of Mechanical Systems	**23 0593**
HVAC Insulation	**23 0700**
Direct Digital Control System for HVAC	**23 0923**
Facility Natural Gas Piping	**23 1123**
Hydronic Piping	**23 2113**
Hydronic Piping Specialties	**23 2116**
HVAC Air Distribution	**23 3000**

Division 26- Electrical

General Provisions	**26 0100**
Raceways	**26 1100**
Wires and Cables	**26 1200**
Outlet Boxes	**26 1300**
Cabinets	**26 1330**
Wiring Devices	**26 1400**
Motors	**26 1500**
Motor Starters	**26 1550**
Panel boards	**26 1600**
Motor and Circuit Disconnects	**26 1700**
Fuses	**26 1810**
Relays and Contactors	**26 1900**
Grounding	**26 4500**
Ballasts and Accessories	**26 5020**

SUMMARY OF WORK
(01-0100)

PART 1 - GENERAL

1.1 Requirements

A. Contractor's duties:

1. Except as specifically noted, provide and pay for:

a. Labor, materials and equipment.

b. Tools, construction equipment and machinery.

c. Water, heat and utilities required for construction.

2. Pay all legally assessed taxes including State of New Mexico Gross Receipts Tax as applicable. Contractor shall pay sales, consumer, use and similar taxes for the Work provided by the Contractor that are legally enacted when bids are received or negotiations concluded, whether or not yet effective or merely scheduled to go into effect.

a. General Contractor and each subcontractor shall cooperate with the Owner in order to minimize the amount of Gross Receipts tax payable by the Contractor or subcontractors as a result of sums received under the agreement. At the request of the Owner, General Contractor shall reduce GRTX due based on implementation of cost segregation studies and/or pursuant to NMAC 3.2.1.11D(1), pursuant to Section 7-9-3.4 NMSA 1978, which indicates that "construction" does not include the installation of carpets or draperies.

b. General Contractor shall assist Owner in facilitation of Cost segregation studies and the reduction of GRTX for all carpet materials installed in Owner projects. Tax segregation studies on behalf of owner will be completed by consultants hired to perform that analysis and will be performed in accordance with New Mexico Statutes and relative regulations governing the application of MM gross receipts tax to tangible personal property and construction projects.

c. Owner will issue a non-tax certificate annually to General contractors. It is the joint responsibility of general contractor and Owner to ensure a non-tax certificate has been made available, as needed on an annual basis.

d. If deductions claimed by General Contractor at the request of owner and tax consultant are later rejected by the NM Taxation and Revenue Department, General Contractor will forward the NMGRTX deficiency notice to the Owner without delay. Contractor will cooperate with any protest or appeal process related

to any tax deficiency. Owner understands and agrees that the contractor shall not be required to pay any deficiency from their own funds. In the event that future determination regarding GRTX amounts due results in additional tax, penalties or interest the owner will make prompt submission of amounts due to NM taxation and Revenue.

3. Secure and pay for, as necessary, for proper execution and completion of Work, and as applicable at time of receipt of bids:

   a. Permits.

   b. Government fees.

   c. Licenses.

4. Give required notices.

5. Comply with codes, ordinances, rules, regulations, orders, and other legal requirements of public authorities which bear on performance of Work.

6. Promptly submit written notice to Engineer of observed variance of Contract Documents from legal requirements. It is not the Contractor's responsibility to make certain that drawings and specifications comply with codes and regulations.

   a. Appropriate Modifications to Contract Documents will adjust necessary changes.

   b. Assume responsibility for Work known to be contrary to such requirements, and attempted or completed without notice.

7. Enforce strict discipline and good order among employees. Do not employ on Work:

   a. Unfit person.

   b. Persons not skilled in assigned task.

1.2 SUPERINTENDENT:

A. General: The Contractor shall employ a competent superintendent and necessary assistants who shall be in attendance at the Project site during the progress of the Work. The superintendent shall represent the Contractor and all communications given to the superintendent shall be as binding as if given to the Contractor. He shall be experienced in administration and supervision of building construction, including mechanical and electrical work. This Superintendent is hereby authorized to act as the general coordinator of interfaces between the works of the separate prime contracts. For the purpose of this provision, "interface" is defined to include scheduling and sequencing of work, sharing of access to work spaces installations, protection of each

other's work, cutting and patching, tolerances, cleaning, selections for compatibility, preparation of coordination drawings, inspections, tests and temporary facilities and services. Important communications shall be confirmed in writing. Other communications shall be so confirmed on written request in each case.

1.3 OWNER-FURNISHED PRODUCTS

A. Items are identified on the drawings as Owner Furnished / Contractor Installed (OFCI).

B. Owner's Responsibilities:

1. Arrange for and deliver necessary product data and installation literature to Contractor.

2. Arrange and pay for product delivery to site, in accordance with the contract schedule.

3. Purchase and pay for products listed above.

4. Deliver Supplier's bill of materials to Contractor.

5. Inspect deliveries jointly with Contractor.

6. Submit claims for transportation damage.

7. Arrange for replacement of damaged, defective, or missing items.

8. Arrange for Manufacturers' warranties, bonds, service and inspection, as required.

C. Contractor's Responsibilities:

1. Designate delivery date for each product in the Construction Schedule.

2. Review data, product data and installation.

   a. Submit to Engineer with notification of any discrepancies or problems anticipated in the use of the product.

3. Promptly inspect products jointly with Owner, record shortages, damaged or defective items.
4. Handle products at the site, including uncrating and storage.

5. Protect products from exposure to elements, from damage.

6. Assemble, install, connect, adjust and finish products.

7. Repair or replace items damaged by Contractor.

1.4 WORK BY OTHERS

A. Work already under contract: Other work may be already under contract at the time this project commences. That work may or may not be on this same site.

B. Cooperate with other contractors as required.

1.5 FUTURE WORK

A. Project is planned for future use by buildings to be constructed under separate contracts.

B. Keep work clear of encroachment into areas required for future work.

1.6 CONTRACTOR'S USE OF PREMISES

A. Confine operations at site to areas permitted by:

1. Law.

2. Ordinances.

3. Permits.

4. Contract Documents.

5. Owner (as determined at Preconstruction Conference).

B. Do not unreasonably encumber site with materials or equipment.

C. Do not load structure with weight that will endanger structure.

D. Assume full responsibility for protection and safe-keeping of products stored on premises.

E. Move any stored products which interfere with operations of Owner or other Contractors.

F. Obtain and pay for use of additional storage or work areas needed for operations.

G. Existing utilities: Work site contains existing utility lines - gas, water and sewer. Before commencing operations, research and verify exact locations and exercise extreme caution during work. Repair all damage promptly to match existing.

H. Existing construction: Repair all damage caused to existing construction to "Like New" condition at no cost to Owner.

1.7 SALVAGE

A. Owner reserves the right of first refusal of ownership of all salvageable materials or vegetation; otherwise all such materials become the property of the Contractor.

B. Obtain permission prior to removal of any material.

C. Deliver materials retained by Owner to the location on site as designated by Owner.

1.8 Asbestos Containing Materials

A. No asbestos containing materials will be permitted to be used in the construction of this facility. Should any specified material in the Contract Documents contain asbestos, notify Engineer, and a substitution will be made.

END OF SECTION

CUTTING AND PATCHING
(01 0700)

PART 1 GENERAL

1.1 DESCRIPTION

A. The general provisions of the Contract, including General Conditions, Supplementary General Conditions (if any) and General Requirements apply to the work specified in this section.

B. Execute cutting (including excavating), fitting or patching of work required to:

1. Make several parts fit properly.
2. Uncover work to provide for installation of ill-timed work.
3. Remove and replace defective work.
4. Remove and replace work not conforming to requirements of contract documents.
5. Remove samples of installed work as specified for testing.
6. Install specified work in existing construction.

C. In addition to contract requirements, upon written instructions of Engineer:

1. Uncover work to provide for Engineer observation of covered work.
2. Remove samples of installed materials for testing.
3. Remove work to provide for alteration of existing work.

D. Do not endanger any work by cutting or altering work on any part of it.

E. Do not cut or alter work of another contractor without consent of Engineer.

F. Coordinate all utility outages with the Owner.

1.2 SUBMITTALS

A. Prior to cutting which affects structural safety of project, or work of another contractor, submit written notice to Engineer, requesting consent to proceed with cutting, including:

1. Identification of project.

2. Description of affected work.

3. Necessity for cutting.

4. Affect on other work, or structural integrity of project.

5. Description of proposed work. Designate:

   a. Scope of cutting and patching.

   b. Contractor and trades to execute work.

   c. Products proposed to be used.

   d. Extent of refinishing.

6. Alternative to cutting and patching.

7. Designation of party responsible for cost of cutting and patching.

B. Prior to cutting and patching done on instruction of Engineer, submit cost estimate consistent with 1.02 below.

C. Should conditions of work, or schedule, indicate change of materials or methods, submit written recommendation to Engineer, including:

1. Conditions indicating change:

2. Recommendations for alternative materials or methods.

3. Submittals as required for substitutions.

D. Submit written notice to Engineer, designating time work will be uncovered, to provide for observations.

1.3 PAYMENT FOR COSTS

A. Costs caused by ill-timed or defective work, or work not conforming to contract documents, including costs for additional services of Engineer, shall be paid by the Contractor.

B. Costs of work done on instruction of Engineer, other than defective or non-conforming work, will be paid by Owner.

PART 2 PRODUCTS

2.1 MATERIALS:

A. For replacement of work removed, match existing materials unless otherwise specified. Comply with specifications for type of work to be done.

PART 3 EXECUTION

3.1 INSPECTION

A. Inspect existing conditions of work, including elements subject to movement or damage during:

1. Cutting and patching.

2. Excavating and backfilling.

B. After uncovering work, inspect conditions affecting installation of new products.

3.2 PREPARATION: Prior to cutting.

A. Provide shoring, bracing, and support as required to maintain structural integrity of project.

B. Provide protection for other portions of project.

C. Provide protection from elements.

3.3 PERFORMANCE

A. Execute fitting and adjustment of products to provide finished installation to comply with specified tolerance, finishes.

B. Execute cutting and demolition by methods which will prevent damage to other work and will provide proper surfaces to receive installation of repairs and new work.

C. Execute excavating and backfilling by methods which will prevent damage to other work and will prevent settlement in accordance with applicable requirements of contract documents.

D. Restore work which has been cut or removed. Install new products to provide completed work in accordance with requirements of contract documents.

E. Refinish entire surfaces as necessary to provide an even finish.

1. Continuous surfaces: to nearest intersections.

2. Assembly: entire refinishing.

3.4 PATCHING AND REPAIRING: Existing and/or remodeled surfaces.

A. Perform all required demolition.

B. Examine all surfaces to be patched and/or repaired.

1. Remove all spauled areas, blisters, runs and sags, etc.

2. Remove all surface irregularities, bumps, depressions, etc.

3. Remove all rotten material.

4. Route or gouge out all cracks.

5. Remove all hollows.

6. Remove all unsound material down to a sound surface.

C. Patch and repair surfaces as required.

1. Clean thoroughly all surfaces to be patched and/or repaired.

2. Prepare area to receive patch (primer), weld-crete, etc.

3. Patch and/or repair area with material to match existing.

4. Fill all depressions.

5. Feather edges, flush with surfaces.

6. Texture to match existing.

7. Refinish, repaint, etc., as specified, entire surface.

D. End result shall conform to the following:

1. Entire surface shall be free of all irregularities.

2. Level, flush, even.

3. Uniform, unbroken texture.

END OF SECTION

BASE BID ALTERNATES
(01 1020)

PART 1 GENERAL

1.1 DESCRIPTION

A. The general provisions of the Contract, including General Conditions, Supplementary General Conditions (if any) and General Requirements apply to the work specified in this section.

1.2 RELATED REQUIREMENTS

A. Instructions to Bidders: Basis of award.

B. Proposal Form.

1.3 COORDINATION

A. Coordinate pertinent related work and modify surrounding work as required to complete the project under each alternate.

END OF SECTION

PROJECT MEETINGS
(01 2000)

PART 1 GENERAL

1.1 GENERAL

A. Related work specified elsewhere:

1. The general provisions of the Contract, including General Conditions, Supplementary General Conditions (if any) and General Requirements apply to the work specified in this section.

2. Pre-bid Conferences: Instructions to Bidders.

3. Summary of Work

4. Construction Schedules

5. Shop Drawings, Product Data and Samples

6. Project Records Documents

B. The Engineer will schedule and administer progress meetings at least once every two weeks or as required.

1. Prepare agenda.

2. Distribute written notice and agenda of regular and called meetings 4 days in advance of meeting date.

C. The Contractor will make physical arrangements for meetings.

D. Engineer will attend meetings to ascertain that work is expedited consistent with construction schedule and with Contract Documents.

1. Preside at meetings.

2. Record minutes; include significant proceedings and decisions.

3. Distribute copies of minutes to participants.

1.2 PRE-CONSTRUCTION MEETINGS

A. Schedule within **5 days** after date of Notice to Proceed.

B. Attendance:

1. Owner.

2. Contractor and his superintendent.

3. Major subcontractors.

4. Safety representative.

5. Representatives of governmental or other regulatory agencies.

C. Minimum agenda:

1. Distribute and discuss:

   a. List of major subcontractors.

   b. Tentative construction schedule.

2. Critical work sequencing.

3. Designation of responsible personnel.

4. Processing of field decisions and change orders.

5. Adequacy of distribution of contract documents.

6. Submittal of shop drawings, product data and samples.

7. Procedures for maintaining Record Documents.

8. Use of premises:

   a. Office and storage areas.

   b. Owner's requirements.

9. Major equipment deliveries and priorities.

10. Safety and first-aid procedures.

11. Security procedures.

12. Housekeeping procedures.

END OF SECTION

CONSTRUCTION SCHEDULES
(01 3100)

PART 1 GENERAL

1.1 DESCRIPTION

A. Related work specified elsewhere:

1. The general provisions of the Contract, including General Conditions, Supplementary General Conditions (if any) and General Requirements apply to the work specified in this section.

2. Summary of Work

3. Shop Drawings, Product Data and Samples

B. Provide projected construction schedules for entire work, revised periodically.

1.2 FORM OF SCHEDULES

A. Prepare in form of horizontal bar chart, as required by Engineer.

1. Provide separate horizontal bar column for each trade or operation.

2. Order: Chronological order of beginning of each item of work.

3. Identify each column:

a. By major specification section number.

b. By distinct graphic delineation.

4. Horizontal time scale: Identify first work day of each week.

5. Scale and spacing: To allow space for updating.

B. Minimum sheet size: 8 1/2 inches x 11 inches.

1.3 CONTENT OF SCHEDULES

A. Provide complete sequence of construction by activity.

1. Shop drawings, project data and samples:

a. Submittal dates.

b. Dates reviewed copies will be required.

2. Decision dates as required for:

a. Products specified by allowances.

b. Selection of finishes.

3. Product procurement and delivery dates.

4. Dates for beginning and completion of each element of construction.

5. Typical Work to be accomplished with responsible party in parenthesis. See drawings for specific work and responsible party.

A. Identify work of separate phases, or other logically grouped activities.

1. Inspections

a. Above ceiling

b. Walls

B. Show projected percentage of completion for each item of work as of 30 days following each application for payment.

C. Provide separate sub-schedule, showing submittals, review times, procurement schedules and delivery dates.

1.2 UPDATING

A. Show all changes occurring since previous submission of updated schedule.

B. Indicate progress of each activity, show completion dates.

C. Include:

1. Major changes in scope.

2. Activities modified since previous updating.

3. Revised projections due to changes.

4. Other identifiable changes.

D. Provide narrative report, including:

1. Discussion of problem areas, including current and anticipated delay factors and their impact.

2. Corrective action taken, or proposed and its effect.

3. Description of revisions:

a. Effect on schedule due to change of scope.

b. Revisions in duration of activities.

c. Other changes that may affect schedule.

1.3 SUBMITTALS

A. Unless specifically waived by Engineer in writing, submit initial schedule within **5 days** after date of Notice to Proceed.

1. Engineer will review schedules and return review copy within 10 days after receipt.

2. If required, resubmit within 7 days after return of review copy.

B. Submit with each Application for Payment an updated schedule accurately depicting progress to date since previous Application for Payment.

C. Submit the number of copies required by Contractor plus 3 copies to be retained by Engineer.

1.4 DISTRIBUTION

A. Distribute copies of reviewed schedules to:

1. Job site file.
2. Subcontractors.
3. Other concerned parties.

B. Instruct recipients to report any inability to comply, and provide detailed explanation with suggested remedies.

END OF SECTION

SHOP DRAWINGS, PRODUCT DATA AND SAMPLES
(01-3400)

PART 1 GENERAL

1.1 DESCRIPTION

A. Submit to the Engineer shop drawings, product data and samples required by specification sections.

B. Related work specified elsewhere:

1. The general provisions of the Contract, including General Conditions, Supplementary General Conditions (if any) and General Requirements apply to the work specified in this section.

2. Construction Schedule

3. Project Record Documents

C. Prepare and submit a separate schedule listing dates for submission and dates that reviewed shop drawings, product data and samples will be needed for each product.

1.2 SHOP DRAWINGS

A. Original drawings, prepared by Contractor, Subcontractor, Supplier or Distributor, which illustrate some portion of the work, showing fabrication, layout, setting or erection details.

B. Prepared by a qualified detailer.

C. Identify details by reference to sheet and detail numbers shown on contract drawings.

D. Minimum sheet size: 8-1/2 inches x 11 inches.

E. Reproductions for submittals: One sepia or reproducible, plus one blue print from the sepia.

1.3 PRODUCT DATA

A. Manufacturer's standard schematic drawings:

1. Modify drawings to delete information which is not applicable to project.

2. Supplement standard information to provide additional information applicable to project.

3. Manufacturer's catalog sheets, brochures, diagrams, schedules, performance charts, illustrations and other standard descriptive data. Clearly mark each copy to identify pertinent materials, products or models.

4. Show dimensions and clearances required.

5. Show performance characteristics and capacities.

6. Show wiring diagrams and controls.

1.4 SAMPLES

A. Physical examples to illustrate materials, equipment or workmanship, and to establish standards by which completed work is judged.

B. All samples shall be submitted within two (2) weeks after Notice to Proceed to permit timely selection of all materials. No colors will be selected until all samples are submitted.

C. Office samples shall be of sufficient size and quantity to clearly illustrate:

1. Functional characteristics of product or material, with integrally related parts and attachment device.

2. Full range of color samples.

3. After review, samples may be used in construction of project with written approval of the Engineer.

1.5 CONTRACTOR RESPONSIBILITIES:

A. Review shop drawings, product data and samples prior to submission.

B. Affix Contractor's approval stamp, sign and date prior to submission.

C. Verify:

1. Field measurements.

2. Field construction criteria.

3. Catalog numbers and similar data.

D. Coordinate each submittal with requirements of work and of Contract Documents.

E. The Contractor is responsible for all information that pertains solely to the fabrication processes and for techniques of assembly and construction.

1 The Contractor is responsible for all information that pertains solely to the fabrication processes and for techniques of assembly and construction.

2 The Contractor is responsible for the coordination of the work of all trades.

3 Contractor's responsibility for errors and omissions in submittals is not relieved by Engineer's review of submittals.

4 Contractor's responsibility for deviations in submittals from requirements of Contract Documents is not relieved by Engineer's review of submittals, unless Engineer gives written acceptance of specific deviations.

5 Notify Engineer in writing at time of submission of deviations in submittals from requirements of Contract Documents.

6 Begin no work which requires submittals until return of submittals with Engineer's shop drawing stamp and initials or signature indicating review.

7 After Engineer's review, distribute copies.

1.6 SUBMISSION REQUIREMENTS

A. Schedule submissions at least 30 days before dates that reviewed submittals will be needed.

B. Submit sepias of shop drawings as specified in 1.02 herein. Submit 3 copies each of product data which shall be retained by Engineer. Submit additional copies of product data as required by Contractor for his distribution.

C. Submit number of samples specified in each of specification sections.

D. Accompany submittals with transmittal letter, in duplicate, containing:

1. Date
2. Project title and number
3. Contractor’s name and address
4. Notification of deviations from Contract Documents
5. Other pertinent date

E. Address submittals to:
The Response Group, Inc.
Attention: Khamsone Phommalavong
11930 Menaul Blvd NE Suite 214
Albuquerque, NM 87112

F. Submittals shall include:

1. Project title and number.

2. The names of:

a. Engineer

b. Contractor

c. Subcontractor

d. Supplier

e. Manufacturer

f. Separate detailer when pertinent.

3. Identification of product or material.

4. Relation to adjacent structure or material.

5. Field dimensions, clearly identified as such.

6. Specification section number.

7. Applicable standards, such as ASTM number of Federal Specification.

8. Blank space, 3-1/2 inches x 3-1/2 inches, for the Engineer's stamp.

9. Identification of deviations from Contract Documents.

10. Contractor's stamp, initialed or signed and dated, certifying to review of submittal, verification of field measurements and compliance with contract documents.

1.7 RESUBMISSION REQUIREMENTS

A. Shop drawings:

1. Revise initial drawings as required and resubmit as specified for initial submittal.

2. Indicate on drawings any changes which have been made other than those requested by Engineer.

B. Product data and samples: Submit new datum and samples as required for initial submittal.

1.8 DISTRIBUTION OF SUBMTTALS AFTER REVIEW

C. Distribute copies of shop drawings and product data which carry Engineer's shop drawing stamp. (Engineer will retain three (3) copies of all submittals). Otherwise, distribute per following:

1. Contractor's file.
2. Job site file.

3. Subcontractors.

4. Supplier.

5. Fabricator.

D. Distribute samples as directed.

1.8 ENGINEER'S DUTIES

A. General: The Engineer's review does not relieve the Contractor of compliance with the Contract Documents.

B. Review submittals with reasonable promptness.

C. Review for:

1. Design concept of project.

2. Information given in contract documents.

D. Review of separate items does not constitute review of an assembly in which item functions.

E. Affix stamp and initials or signature certifying to review of submittal.

F. Return submittals to Contractor for distribution.

G. Request additional submittals if necessary.

END OF SECTION

TEMPORARY FACILITIES AND CONTROLS
(01 5000)

PART 1 GENERAL

1.1 GENERAL

A. The general provisions of the Contract, including General Conditions, Supplementary General Conditions (if any) and General Requirements apply to the work specified in this section.

B. Provide all facilities and controls of substantial construction, as required, to serve intended purpose during full life of project or for full extent of need during construction, and as approved by Engineer.

1.2 REQUIREMENTS OF REGULATORY AGENCIES

A. Comply with all regulations and ordinances of the local city and State Fire Code relating to provisions of facilities for building construction.

PART 3 EXECUTIONS

3.1 GENERAL

A. Project bulletin board: Install and maintain during life of project a weather tight or protected bulletin board approximately 3 ft. high x 5 ft. long, mounted in a conspicuous location. Remove from site upon completion of project. At all times display the following items on the bulletin board.

- Equal Opportunity Poster.
- Applicable State Wage Rates.
- Safety requirements.
- Official notices or announcements.
- Copy of building permit.
- Other items as appropriate.

B. Site maintenance:

- Rigidly observe good housekeeping practices.
- Maintain entire construction site in a clean and neat condition.

- Inspect area daily and clean up debris as necessary to maintain neatness. Stockpile debris in designated areas and remove to off-site disposal area no less than once weekly.

C. Approved waste and excess cut material disposal sites:

- Locate suitable site or sites.
- Obtain required and necessary approvals.
- Comply with all requirements of local health authorities.

D. Telephone:

- Provide a telephone for two-way communications during the Project.

3.2 BARRICADES

A. Erect and maintain all required barricades, lanterns, warning devices, etc. to comply with applicable provisions of municipal, State and Federal safety laws.

3.3 TEMPORARY ACCESS

A. Portions of the existing building will be used throughout construction. Provide temporary access to building as shown on the drawings.

3.4 REMOVAL OF TEMPORARY FACILITIES

A. Remove temporary facilities progressively as need no longer exists.

B. Clean up debris.

C. Leave no trace of installations at end of project.

END OF SECTION

SUBSTITUTIONS
(01 6400)

PART 1 GENERAL

1.1 RELATED WORK SPECIFIED ELSEWHERE:

A. The general provisions of the Contract, including General Conditions, Supplementary General Conditions (if any) and General Requirements apply to the work specified in this section.

B. Substitutions During Bidding: Instructions to Bidders.

C. Shop Drawings, Product Data, Samples

D. Read all specifications thoroughly for specific data, samples, etc. requirements.

1.2 CONSIDERATION OF REQUEST

A. Requests for substitutions are to be submitted in strict accordance with the requirements of this section and all related sections. Substitutions will not be considered if:

1. They are made outside of the period of time here specified.

2. They are incomplete according to the requirements here specified.

3. They are indicated or implied on shop drawings or product data submittals without formal written request submitted in accordance with Paragraph 1.05.

4. Acceptance will require revisions of Contract Documents without equitable reimbursement by Contractor to the Engineer.

1.3 PRODUCTS LIST

A. Within 15 days after the Notice to Proceed, submit to Engineer five copies of complete list of all products which are proposed for installation.

B. Tabulate list by each specification section.

C. For products specified under reference standards, include with listing of each product:
1. Name and address of manufacturer.

2. Trade name.

3. Model or catalog designation.

4. Manufacturer's data.

   a. Performance and test data.

   b. Reference standards.

1.4 CONTRACTOR'S OPTIONS

A. For products specified only by reference standards, select any product meeting standards, by any manufacturer.

B. For products specified by naming several products or manufacturer's select any product and manufacturer named.

C. For products specified by naming one or more products but indicating the option of selecting equivalent products by stating "or equal" after specified product, Contractor must submit request for prior approval, as required for Substitutions, for any product not specifically named.

D. For products specified by naming only one product and manufacturer, the Engineer may, at his discretion, allow a substitution. However, the Contractor shall submit request for prior approval as required for Substitutions, for any product not specifically named.

1.5 SUBSTITUTIONS

A. During bidding: (Prior approvals)

1. Engineer will consider written requests from prime bidders for substitutions received at least seven days prior to bid date; requests received after that time will not be considered. Such requests shall include the name of the material or equipment for which it is to be substituted and a complete description of the proposed substitution including drawings, performance and test data, and other information necessary for an evaluation. A statement setting forth changes in other materials, equipment or other portions of the Work including changes in the work of other contracts that incorporation of the proposed substitution would require shall be included. The burden of proof of the merit of the proposed substitution is upon the proposer. The Engineer's decision of approval or disapproval of a proposed substitution shall be final.

2. If Engineer approves any substitution, such approval will be set forth in an addendum.

B. Under contract: Within 30 days after date of Contract, Engineer at his discretion may consider written requests from Contractor for substitution

of products in place of those specified only in the following circumstance:

1. Specified material and/or procedures are unavailable within a reasonable time frame, causing undue hardship to the Contractor or delay of project.

2. Specified material is discontinued or no longer manufactured.

1.6 REQUEST: (PRIOR APPROVAL)

A. Prior approval request: Submit five copies of request for substitution. Include in request:

1. Complete data substantiating compliance of proposed substitution with Contract Documents.

2. For products:

a. Product identification, including manufacturer's name and address.

b. Manufacturer's literature:

- Product description.
- Performance and test date.
- Reference standards.

c. Samples.

d. Itemized comparison of proposed substitution with specified product which identifies the essential similarities or differences in design, construction, finish, operation, features, etc.

e. Name and address of similar projects on which product was used, and date of installation.

3. For Construction methods:

a. Detailed description of proposed method.

b. Drawings illustrating methods.

1.7 REQUEST (UNDER CONTRACT)

A. Under contract request: In addition to the requirements as indicated under 1.06 Item A above, the Contractor shall include in his request:

1. Data relating to changes in construction schedule.

2. Relation to separate contracts.

3. Accurate cost data on proposed substitution in comparison with product or method specified.

4. Amount of credit to the Owner.

1.8 IN MAKING REQUEST FOR SUBSTITUTION, BIDDER/CONTRACTOR REPRESENTS:

A. That the Owner will receive credit if the substitution proposed results in any savings.

B. He has personally investigated proposed product or method and determined that it is equal or superior in all respects to that specified.

C. He will provide the same guarantee for substitution as for product or method specified.

D. He will coordinate installation of accepted substitution into work, make such changes as may be required for work to be completed in all respects.

E. He waives all claims for additional costs related to substitution which subsequently become apparent.

F. Cost data is complete and includes all related costs under his contract, but exclude:

1. Cost under separate contracts.

2. Engineer's redesign.

END OF SECTION

CONTRACT CLOSEOUT
(01 7000)

PART 1 GENERAL

1.1 RELATED WORK SPECIFIED ELSEWHERE:

A. The general provisions of the Contract, including General Conditions, Supplementary General Conditions (if any) and General Requirements apply to the work specified in this section.

B. Time of Final Payment: The Agreement.

C. Completion, Waiver of Claims: General Conditions.

D. Liquidated Damages: Supplementary General Conditions.

E. Payments and Completion: Supplementary General Conditions.

F. Cleaning

G. Project Record Documents

H. Spare Parts and Maintenance Materials :Respective section of Specifications.

I. Closeout Submittals Required of Trades :Respective sections of Specifications.

1.2 SUBSTANTIAL COMPLETION

A. Contractor:

1. Submit written certification to Engineer, that project or designated portion of the project, is substantially complete.

2. Submit list of major items to be completed or corrected.

B. Engineer will make an inspection within seven days after receipt of certification, together with Owner's representative.

C. Should Engineer consider that work is substantially complete:

1. Contractor shall prepare, and submit to Engineer, a list of items to be completed or corrected, as determined by the inspection.

2. Engineer will prepare and issue a Certificate of Substantial Completion, containing:

a. Date of Substantial Completion.

b. Contractor's list of items to be corrected or completed, verified and amended by the Engineer.

c. The time within which the Contractor shall complete or correct the listed items.

d. Time and date Owner will assume possession of work or designated portion thereof.

e. Responsibilities of Owner and Contractor for:

- Insurance.
- Utilities.
- Operation of mechanical, electrical, and other systems.
- Maintenance and cleaning.
- Security.

f. Signatures of:

- Engineer.
- Contractor.
- Owner.

3. Owner occupancy of project or designated portion of project:

a. Contractor shall:

- Obtain certificate of occupancy.
- Perform final cleaning in accordance with Section 01710.

b. Owner will occupy project, under provisions stated in Certificate of Substantial Completion.

4. Contractor: Complete work listed for completion or correction, within designated time.

D. Should Engineer consider that Work is not Substantially Complete:

1. He shall immediately notify Contractor, in writing, stating reasons.

2. Contractor shall complete work, and send second written notice to Engineer, certifying that project, or designated portion of project, is substantially complete.

3. Engineer will re-inspect work.

1.3 FINAL INSPECTION

A. Contractor shall submit a written certificate that:

1. Contract Documents have been reviewed.
2. Project has been inspected for compliance with the Contract Documents.

3. Work has been completed in accordance with the Contract Documents.
4. Equipment and systems have been tested in presence of Owner's representative and are operational.

5. Project is completed and ready for final inspection.

B. Engineer will make final inspection within seven days after receipt of certification.

C. Should Engineer consider that work is finally complete in accordance with the Contract Documents, he shall request Contractor make Project Closeout Submittals.

D. Should Engineer consider that work is not finally complete:

1. He shall notify contractor, in writing, stating reasons.

2. Contractor shall take immediate steps to remedy the stated deficiencies, and send second written notice to Engineer certifying that Work is complete.

3. Engineer will re-inspect work.

1.4 REINSPECTION COSTS

A. Should Engineer be required to perform second inspections because of failure of work to comply with original certifications of Contractor, Owner will compensate Engineer for additional services, and deduct amount paid from final payment to Contractor.

1.5 CLOSEOUT SUBMITTALS

(Deliver directly to Engineer unless noted otherwise.)

A. Project record documents: To requirements of Section 01720.

B. Operation and maintenance data: 2 sets.

C. Guarantees and bond: 2 sets.

D. Keys and keying schedule: Deliver directly to Owner. All keys tagged and identified.

E. Deliver evidence of compliance with requirements of governing authorities:

1. Certificates of inspection.

2. Certificate of occupancy.

F. Mechanical systems: Deliver test and balance reports.

G. The following submittals shall be fully executed before delivery to the Engineer:

1. Contractor's Affidavit of Payment of Debts and Claims (AIA G706).

2. Contractor's Affidavit of Release of Liens (AIA G706A).

3. Consent of Surety to Final Payment (AIA G707).

H. Deliver maintenance materials directly to Owner as required in respective sections of these specifications.

I. List of subcontractors: Provide a typed list of all subcontractors identified on List of Subcontractors submitted with bid together with area of work, mailing address, and contact person and phone number.

J. Contractors Daily Safety / Inspection Checklists. (Per 01010).

1.6 INSTRUCTION

A. Instruct Owner's personnel in operation of all systems, mechanical, electrical, and other equipment.

B. Walk Owner thru project to verify all keys work as intended.

1.7 FINAL ADJUSTMENT OF ACCOUNTS

A. Submit final statement of accounting to Engineer.

B. Statement to reflect all adjustments.
1. Original contract sum.

2. Additions and deductions resulting from:

   a. Previous Change Orders.

   b. Cash allowances.

   c. Other adjustments.

   d. Deductions for uncorrected Work.

   e. Penalties and bonuses.

   f. Deductions for liquidated damages.

   g. Deductions for re-inspection payments.

3. Total Contract sum, as adjusted.

4. Previous payments.

5. Sum remaining due.

C. Submit other documents as required by General, Supplementary, and/or Special Conditions.

D. Engineer will prepare final Change Order, reflecting approved adjustments to Contract Sum not previously made by Change Orders.

1.8 FINAL APPLICATION AND CERTIFICATE FOR PAYMENT

A. Contractor shall submit final application in accordance with requirements of General, Supplementary, and/or Special Conditions.

1.9 POST-CONSTRUCTION INSPECTION

A. Prior to expiration of one year from date of Substantial Completion, the Owner will notify the Engineer to make visual inspection of project in company of Owner and Contractor to determine whether correction of work is required, in accordance with provisions of the General Conditions.

B. For guarantees beyond one year, Engineer will make inspections at request of Owner, after notification is given to Contractor.

C. Engineer will promptly notify Contractor, in writing, of any observed deficiencies.

END OF SECTION

CLEANING
(01 7100)

PART 1 GENERAL

1.1 DESCRIPTION

A. Related work specified elsewhere:

1. The general provisions of the Contract, including General Conditions, Supplementary General Conditions (if any) and General Requirements apply to the work specified in this section.

2. Read all specifications thoroughly and perform all cleaning operations required under each section.

B. Maintain premises and public properties free from accumulations of waste, debris and rubbish caused by operations.

C. At completion of work, remove waste materials, rubbish, tools, and equipment, machinery and surplus materials and clean all sight-exposed surfaces; leave project clean and ready for occupancy.

1.2 SAFETY REQUIREMENTS

A. Standards: Maintain project in accordance with following safety and insurance standards:

1. Local City ordinances and State and Federal safety laws.

2. Applicable insurance requirements.

3. OSHA.

B. Fire Protection:

1. Store volatile wastes in colored metal containers and remove from premises daily.

2. Prevent accumulation of wastes which create hazardous conditions.

3. Provide adequate ventilation during use of volatile or noxious substances.

C. Pollution Control:

1. Conduct cleaning and disposal operations to comply with local ordinances and anti-pollution laws.

2. Do not burn or bury rubbish and waste materials on project site.

3. Do not dispose of volatile wastes such as mineral spirits, oil or paint thinner in storm or sanitary drains.

4. Do not dispose of wastes into streams or waterways.

PART 2 PRODUCTS

2.0 MATERIALS

A. Use only cleaning materials recommended by manufacturer of surface to be cleaned.

B. Use cleaning materials only on surfaces recommended by cleaning material manufacturer.

PART 3 EXECUTIONS

3.0 DURING CONSTRUCTION

A. Execute cleaning (at least weekly) to ensure that building, grounds and public properties are maintained free from accumulations of waste materials and rubbish.

B. Wet down dry materials and rubbish to lay dust and prevent blowing dust.

C. At reasonable intervals during progress of work, clean site and public properties, and dispose of waste materials, debris and rubbish.

D. Provide on-site containers for collection of waste materials, debris and rubbish.

E. Remove waste materials, debris and rubbish from site and legally dispose of at public or private dumping areas off Owner's property.

F. Handle materials in a controlled manner with as few handlings as possible; do not drop or throw materials from heights.

G. Schedule cleaning operations so that dust and other contaminants resulting from cleaning process will not fall on wet, newly painted surfaces.

3.1 FINAL CLEANING

A. Use experienced workmen, or professional cleaners for final cleaning.

B. Clean all surfaces thoroughly as required by other sections of these specifications.

C. Maintain cleaning until project, or portion thereof, is occupied by Owner.

D. Clean those portions of the existing complex that were used as access to the construction area.

E. Broom clean exterior paved surfaces; rake clean other surfaces or grounds.

F. Beside general broom cleaning, do following special cleaning for all trades at completion of work:

1. Remove putty stains from glass: wash, polish same, inside and outside. Exercise care not to scratch glass.

2. Remove marks, stains, fingerprints, other soil, dirt from painted, decorated, or stained work.

3. Clean, polish and wax woodwork.

4. Clean and polish hardware for removal of stains, dust, dirt, paint and the like.

5. Remove spots, soil, paint from tile and similar work; wash same.

6. Clean fixtures, equipment; remove stains, paint, dirt, dust.

7. Remove temporary floor protections.

8. Clean and polish all floors.

9. Remove all temporary protections at the site.

10. Clean exterior and interior metal surfaces, including doors and windows, of oil, stains, dust, dirt, paint and the like.

G. Ventilating systems:

1. Clean permanent filters and replace disposable filters if units were operated during construction.

2. Clean ducts, blowers and coils if units were operated without filters during construction.

H. Make buildings ready for occupancy in all respects. Lay heavy building paper in main circulation areas to protect the floors until final inspection and acceptance.

END OF SECTION

PROJECT RECORD DOCUMENTS
(01 7200)

PART 1 GENERAL

1.1 RELATED WORK SPECIFIED ELSEWHERE:

A. The general provisions of the Contract, including General Conditions, Supplementary General Conditions (if any) and General Requirements apply to the work specified in this section.

B. Shop Drawings, Product Data and Samples

C. Contract Closeout

1.2 MAINTENANCE OF DOCUMENTS

A. Maintain at jobsite one copy of:

1. Contract drawings.

2. Specifications.

3. Addenda.

4. Reviewed shop drawings.

5. Change Orders.

6. Other modifications to contract.

7. Field test records.

B. Store documents in field office. Keep apart from documents used for construction.

C. Provide files and racks for storage of documents.

D. File documents in accordance with project filing format of Uniform Construction Index.

E. Maintain documents in clean, dry, legible condition.

F. Do not use record documents for construction purposes.

G. Make documents available at all times for inspection by Engineer and Client.

1.3 MARKING DEVICES

A. Provide red colored pencil for all marking.

1.4 RECORDING

A. Label each document "Project Record" in 2 inch high printed letters.

B. Keep record documents current. Make all entries within 24 hours after receipt of information.

C. Do not permanently conceal any work until required information has been recorded.

D. Contract drawings and/or logs:

1. Legibly mark to record actual construction:

a. Depths of various elements of foundation in relation to permanent surface improvements.

b. Horizontal and vertical location of underground utilities and appurtenances referenced to permanent surface improvements.

c. Location of internal utilities and appurtenances concealed in construction referenced to visible and accessible features of structure.

d. Field changes of dimension and detail.

e. Changes made by Change Order or Supplemental Instructions.

f. Details not in original contract drawings.

2. Making Entries on Drawings: Using an erasable colored pencil (not ink or indelible pencil), clearly describe the change by note and by graphic line, as required. Date all entries. Call attention to the entry by a "cloud" around the area or areas affected. In the event of overlapping changes, different colors may be used for each of the changes.

E. Specifications and addenda: Legibly mark up each section to record:

1. Manufacturer, trade name, catalog number and supplier of each product and item of equipment actually installed.

2. Changes made by Change Order or Supplemental Instructions.

3. Other matters not originally specified.

F. Shop drawings: Maintain as record documents: Legibly annotate drawings to record changes made after review.

G. Daily Inspection Reports: The Contractor's superintendent shall prepare a daily report for the entire duration of the project. When no work is being performed, the report shall indicate the reasons. The report should also include but the contents should not necessarily be limited to the following information: Date, temperature and weather conditions, trades working on the site and number of workers, heavy equipment on site, etc.

1.5 SUBMITTAL

A. General: The Engineer's approval of the current status of record documents will be a prerequisite to the Engineer's approval of requests for progress payment and request for final payment under the contract.

B. Progress Submittals: Prior to submitting each request for progress payment, secure the Engineer's approval of the record documents as currently maintained.

C. At completion of project, deliver record documents to Engineer.

1. Accompany submittal with transmittal letter, in duplicate, containing:

a. Date.

b. Project title and number.

c. Contractor's name and address.

d. Title and number of each record document.

e. Certification that each document as submitted is complete and accurate.

f. Signature of Contractor or his authorized representative.

END OF SECTION

STRUCTURAL STEEL FRAMING
(05 1200)

PART 1 - GENERAL

1.1 DESCRIPTION:

This section specifies structural steel and Code of Standard Practice for Steel Buildings and Bridges.

1.2 RELATED WORK:

A. Materials testing and inspection during construction.

B. Steel Joist: Section 05 21 00, STEEL JOIST FRAMING.

C. Composite Steel Deck: Section 05 36 00, COMPOSITE METAL DECKING.

1.3 QUALITY ASSURANCE:

A. Fabricator and erector shall maintain a program of quality assurance in conformance with Code of Standard Practice for Steel Buildings and Bridges. Work shall be fabricated in an AISC certified Category Std fabrication plant.

B. Before authorizing the commencement of steel erection, the controlling contractor shall ensure that the steel erector is provided with the written notification required by 29 CFR 1926.752. Provide copy of this notification to the Resident Engineer.

1.4 TOLERANCES:

Fabrication tolerances for structural steel shall be held within limits established by ASTM A6, by AISC 303, Code of Standard Practice for Buildings and Bridges, except as follows:

A. Elevation tolerance for closure plates at the building perimeter and at slab openings prior to concrete placement is 6 mm (1/4 inch).

1.5 DESIGN:

A. Connections: Design and detail all connections for each member size, steel grade and connection type to resist the loads and reactions indicated on the drawings or specified herein. Use details consistent with the details shown on the Drawings, supplementing where necessary. The details shown on the Drawings are conceptual and do not indicate the required weld sizes or number of bolts unless specifically noted. Use rational engineering design and standard practice in detailing, accounting for all loads and eccentricities in both the connection and the members. Promptly notify the Resident Engineer of any location where the connection design criteria is not clearly indicated. The design of all connections is subject to the review and acceptance of the Resident Engineer. Submit structural calculations prepared

and sealed by a qualified engineer registered in the state where the project is located. Submit calculations for review before preparation of detail drawings.

1.6 REGULATORY REQUIREMENTS:

A. AISC 360: Specification for Structural Steel Buildings

B. AISC 303: Code of Standard Practice for Steel Buildings and Bridges.

1.7 SUBMITTALS:

A. SHOP DRAWINGS, PRODUCT DATA, AND SAMPLES.

B. Shop and Erection Drawings: Complete

C. Certificates:

1. Structural steel.

2. Steel for all connections.

3. Welding materials.

4. Shop coat primer paint.

D. Test Reports:

1. Welders' qualifying tests.

E. Design Calculations and Drawings:

1. Connection calculations, if required.

F. Record Surveys.

1.8 APPLICABLE PUBLICATIONS:

A. Publications listed below form a part of this specification to extent referenced. Publications are referenced in text by basic designation only.

B. American Institute of Steel Construction (AISC):

1. AISC 360-10 Specification for Structural Steel Buildings

2. AISC 303-10 Code of Standard Practice for Steel Buildings and Bridges

C. American National Standards Institute (ANSI):

B18.22.1-65(R2008).....Plain Washers

B18.22M-81(R2000).....Metric Plain Washers

D. American Society for Testing and Materials (ASTM):

A6/A6M-11 .....Standard Specification for General Requirements for Rolled Structural Steel Bars, Plates, Shapes, and Sheet Piling

A36/A36M-08 .....Standard Specification for Carbon Structural Steel

A53/A53M-10 .....Standard Specification for Pipe, Steel, Black and Hot-Dipped, Zinc-Coated Welded and Seamless

A123/A123M-09 .....Standard Specification for Zinc (Hot-Dip Galvanized) Coatings on Iron and Steel Products

A242/A242M-04(R2009)....Standard Specification for High-Strength Low-Alloy Structural Steel

A283/A283M-03(R2007)....Standard Specification for Low and Intermediate Tensile Strength Carbon Steel Plates

A307-10.....Standard Specification for Carbon Steel Bolts and Studs, 60,000 psi Tensile Strength

A325-10.....Standard Specification for Structural Bolts, Steel, Heat Treated, 120/105 ksi Minimum Tensile Strength

A490-12.....Standard Specification for Heat-Treated Steel Structural Bolts 150 ksi Minimum Tensile Strength

A500/A500M-10a .....Standard Specification for Cold Formed Welded and Seamless Carbon Steel Structural Tubing in Rounds and Shapes

A501-07.....Standard Specification for Hot-Formed Welded and Seamless Carbon Steel Structural Tubing

A572/A572M-07 .....Standard Specification for High-Strength Low-Alloy Columbium-Vanadium Structural Steel

A992/A992M-11 .....Standard Specification for Structural Steel Shapes

E. American Welding Society (AWS):

D1.1/D1.1M-10 .....Structural Welding Code-Steel

F. Research Council on Structural Connections (RCSC) of The Engineering Foundation:

Specification for Structural Joints Using ASTM A325 or A490 Bolts

G. Military Specifications (Mil. Spec.):

MIL-P-21035.....Paint, High Zinc Dust Content, Galvanizing, Repair

H. Occupational Safety and Health Administration (OSHA):

29 CFR Part 1926-2001 ....Safety Standards for Steel Erection

PART 2 - PRODUCTS

2.1 MATERIALS:

A. Structural Steel: ASTM A242.

B. Structural Tubing: ASTM A500, Grade B.

C. Structural Tubing: ASTM A501.

D. Steel Pipe: ASTM A53, Grade B.

E. Bolts, Nuts and Washers:

1. High-strength bolts, including nuts and washers: ASTM A325

2. Bolts and nuts, other than high-strength: ASTM A307, Grade A.

3. Plain washers, other than those in contact with high-strength bolt heads and nuts: ANSI Standard B18.22.1

F. Zinc Coating: ASTM A123.

G. Galvanizing Repair Paint: Mil. Spec. MIL-P-21035.

PART 3 - EXECUTION

3.1 CONNECTIONS (SHOP AND FIELD):

A. Welding: Welding in accordance with AWS D1.1. Welds shall be made only by welders and welding operators who have been previously qualified by tests as prescribed in AWS D1.1 to perform type of work required.

B. High-Strength Bolts: High-strength bolts tightened to a bolt tension not less than 70% of their minimum tensile strength. Tightening done with properly calibrated wrenches, by turn-of-nut method or by use of direct tension indicators (bolts or washers). Tighten bolts in connections identified as slip-critical using Direct Tension Indicators. Twist-off torque bolts are not an acceptable alternate fastener for slip critical connections.

3.2 FABRICATION:

Fabrication in accordance with Chapter M, AISC 360. .

3.3 SHOP PAINTING:

A. General: Shop paint steel with primer in accordance with AISC 303.

B. Do not apply paint to following:

1. Surfaces within 50 mm (2 inches) of joints to be welded in field.

2. Surfaces which will be encased in concrete.

2. Surfaces which will receive sprayed on fireproofing.

3. Top flange of members which will have shear connector studs applied.

C. Structural steel in the interstitial space that does not receive sprayed on fireproofing shall be painted with primer in accordance with general requirement of shop painting.

D. Zinc Coated (Hot Dip Galvanized) per ASTM A123 (after fabrication): Touch-up after erection: Clean and wire brush any abraded and other spots worn through zinc coating, including threaded portions of bolts and welds and touch-up with galvanizing repair paint.

3.4 ERECTION

A. General: Erection in accordance with AISC 303. Temporary Supports: Temporary support of structural steel frames during erection in accordance with AISC 303.

3.5 FIELD PAINTING:

A. After erection, touch-up steel surfaces specified to be shop painted. After welding is completed, clean and prime areas not painted due to field welding.

3.6 SURVEY:

Upon completion of finish bolting or welding on any part of the work, and prior to start of work by other trades that may be supported, attached, or applied to the structural steel work, submit a certified report of survey to Resident Engineer for

approval. Reports shall be prepared by Registered Land Surveyor or Registered Civil Engineer as specified in Section 01 00 00, GENERAL REQUIREMENTS. Report shall specify that location of structural steel is acceptable for plumbness, level and alignment within specified tolerances specified in the AISC Manual.

END OF SECTION

STEEL JOIST FRAMING GENERAL
52 2100

1.1 DESCRIPTION:

This section specifies open web, longspan, and deep longspan steel joists.

1.2 RELATED WORK:

A. Structural Steel: Section 05 12 00, STRUCTURAL STEEL FRAMING.

1.3 DESIGN REQUIREMENTS:

Design all elements with the latest published version of applicable Codes.

1.4 TOLERANCES:

Deviation from a straight line between ends of any installed joist shall not exceed 10 mm in 3 m (3/8 inch in 10 feet).

1.5 REGULATORY REQUIREMENTS:

STEEL JOIST INSTITUTE: Standard Specifications, Load Tables and Weight Tables for Steel Joists and Joist Girders, (Latest Edition).

1.6 SUBMITTALS:

A. SHOP DRAWINGS, PRODUCT DATA, AND SAMPLES.

B. Shop and Erection Drawings: Complete.

1. Fabrication drawings including details and schedules for the fabrication and assembly of each joist.

2. Erection drawings showing the size and location of each joist, bridging, cross bracing, bearing details, connections, welds, bolts and bearing plates.

C. Design Calculations: If requested by the Resident Engineer, submit complete calculations covering the design of all members and connections. Calculations must be specifically applicable to the joists supplied.

1.7 QUALITY ASSURANCE:

Provide documentation that the joist manufacturer is a member of the Steel Joist Institute and has satisfactorily completed work of a similar scope and nature.

1.8 APPLICABLE PUBLICATIONS:

A. Publications listed below form a part of this specification to extent referenced. Publications are referenced in text by basic designation only.

B. American Institute of Steel Construction (AISC):

1. Specification for Structural Steel Buildings – Allowable Stress Design and Plastic Design (Latest Edition).

2. Load and Resistance Factor Design Specification for Structural Steel Buildings (Latest Edition).

C. American Society for Testing and Materials (ASTM):

A307-07.....Carbon Steel Bolts and Studs, 400 MPa (60,000 psi) Tensile Strength
A325-09.....Structural Bolts, Steel, Heat Treated, 800/700 MPa (120/105 ksi) Minimum Tensile Strength
A490-08.....Heat-Treated Steel Structural Bolts, 1000 MPA (150 ksi) Minimum Tensile Strengths

D. American Welding Society (AWS):

D1.1-08.....Structural Welding Code – Steel

D. SSPC: The Society for Protective Coatings:

Steel Structures Painting Manual, Volumes 1 and 2

E. Steel Joist Institute (STEEL JOIST INSTITUTE):

Standard Specifications, Load Tables and Weight Tables for Steel Joists and Joist Girders (Latest Edition).

PART 2 - PRODUCTS

2.1 OPEN WEB STEEL JOISTS:

K-Series conforming to STEEL JOIST INSTITUTE standard specifications.

2.2 LONGSPAN STEEL JOISTS AND DEEP LONGSPAN STEEL JOISTS:

LH-Series and DLH-Series conforming to STEEL JOIST INSTITUTE standard specifications.

2.3 ACCESSORIES – FITTINGS:

A. Accessories and fittings, including end supports and bridging, in accordance with standard STEEL JOIST INSTITUTE specification under which joists were designed.

B. Unfinished Threaded Fasteners: ASTM A307, Grade A, regular hexagon type, low carbon steel.

C. High-strength bolts, including nuts and washers: ASTM A325 or A490 heavy hexagon structural bolts.

2.4 BEDDING MORTAR:

A. For joist ends bearing on concrete or masonry, provide bedding mortar as follows:

1. Portland cement and sand, mixed at a ratio of 1 part cement to 3 parts sand, by volume, with enough water for placement and hydration.

2. Non-metallic, shrinkage-resistant mortar; premixed, non-corrosive, non-staining product containing selected silica sands, portland cement, shrinkage compensating agents, plasticizing and water reducing agents, complying with CRD-C-621.

PART 3 - EXECUTION

3.1 FABRICATION:

A. Fabrication and assembly in accordance with applicable standard STEEL JOIST INSTITUTE specification:

1. Make chord splices with full penetration welds capable of developing the ultimate strength in tension of the parent material. Make no allowance for the strength of back-up bars or other material incidental to welding.

2. Provide shop-welded connection plates at panel points to receive supplemental framing.

3. Holes in Chord Members: Provide holes in chord members where shown for securing other work to steel joists; however, deduct area of holes from the area of chord when calculating strength of member.

4. Extended Ends: Provide extended ends on joists where shown, complying with manufacturer’s standards and requirements of applicable STEEL JOIST INSTITUTE specifications.

5. Ceiling Extensions: Provide ceiling extension in areas having ceilings attached directly to joist bottom chord. Provide either an extended bottom chord element or a separate unit, to suit manufacturer’s standards, of sufficient strength to

support ceiling construction. Extend ends to within 12 mm (1/2 inch) of finished wall surface unless otherwise indicated.

6. Bridging: Provide horizontal or diagonal type bridging for joists and joist girders, complying with STEEL JOIST INSTITUTE specifications. Provide bridging anchors for ends of bridging lines terminating at walls or beams. Provide bridging adequate to resist the loads indicated on the Contract Documents.

7. End Anchorage: Provide end anchorages, including bearing plates, to secure joists to adjacent construction, complying with STEEL JOIST INSTITUTE specifications, unless otherwise indicated. Design all end anchorages to resist a minimum net uplift of 1.6 kPa (35 pounds per square foot) of supported area.

8. Header Units: Provide header units to support all joists at openings in floor or roof system not framed with steel shapes.

9. Provide supplemental steel support framing for metal deck where normal deck bearing is precluded by other framing members and minor openings.

3.2 SHOP PAINTING:

A. Shop painting in accordance with applicable STEEL JOIST INSTITUTE standard specification.

B. Shop paint joists and accessories with a rust-inhibiting primer paint. For joists which will be finish painted, limit paint to a primer which is compatible with specified finish paint. In high humidity areas, shop paint joists with a zinc-rich primer to receive top coats per the paint system manufacturer’s recommendations.

3.3 ERECTION:

A. Installation of joists in accordance with applicable STEEL JOIST INSTITUTE standard specification.

B. Handle joists in a manner to avoid damaging of joists. Remove damaged joists from site, except when field repair is approved and such repairs are satisfactorily made in accordance with manufacturer's recommendations.

C. Accurately set joists and end anchorage in accordance with the applicable STEEL JOIST INSTITUTE standard specification. Secure joists resting on masonry or concrete bearing surfaces by welding or bolting to the steel bearing plates as indicated on the Contract Documents. Secure bridging and anchoring in place prior to application of any construction loads. Distribute any temporary loads so that carrying capacity of any joist is not exceeded. Loads shall not be applied to bridging where joist lengths are 12 m (40 feet) and longer. Where joist lengths are 12 m (40 feet) and longer, install a center row of bolted diagonal bridging to provide lateral stability before slackening of hoisting lines.

3.4 FIELD PAINTING:

A. Clean abraded, corroded, and field welded areas and touch up with same type of paint used in shop painting.

END OF SECTION

COMPOSITE METAL DECKING
05 3600

GENERAL

1.1 DESCRIPTION:

This section specifies material and services required for installation of composite steel decking including shear connector studs and miscellaneous closures required to prepare deck for concrete placement as shown and specified.

1.2 RELATED WORK:

Materials testing and inspection during construction.

1.3 DESIGN REQUIREMENTS:

A. Design steel decking in accordance with American Iron And Steel Institute publication "Specifications for the Design of Cold Formed Steel Structural Members", except as otherwise shown or specified.

B. Design all elements with the latest published version of applicable codes.

1.4 SUBMITTALS:

A. SHOP DRAWINGS, PRODUCT DATA, AND SAMPLES.

B. Shop Drawings: Shop and erection drawings showing decking unit layout, connections to supporting members, and information necessary to complete the installation as shown and specified, including supplementary framing, cant strips, cut openings, special jointing or other accessories. Show welding, side lap, closure, deck reinforcing and closure reinforcing details. Show openings required for work of other trades, including openings not shown on structural drawings. Indicate where temporary shoring is required to satisfy design criteria.

C. Manufacturer's Literature and Data: Showing steel decking section properties and specifying structural characteristics as specified herein.

D. Manufacturer's written recommendations for:

1. Shape of decking section to be used.

2. Cleaning of steel decking prior to concrete placement.

E. Test Report - Establishing structural characteristics of composite concrete and steel decking system.

F. Test Report - Stud base qualification.

G. Welding power setting recommendation by shear stud manufacturer.

H. Shear Stud Layouts: Submit drawings showing the number, pattern, spacing and configuration of the shear studs for each beam and girder.

I. Certification: For each type and gauge of metal deck supporting concrete slab or fill, furnish certification of the specified fire ratings. Certify that the units supplied are U.L. listed as a “Steel Floor and Form Unit”.

1.5 QUALITY ASSURANCE:

Underwriters’ Label: Provide metal floor deck units listed in Underwriters’ Laboratories “Fire Resistance Directory”, with each deck unit bearing the UL label and marking for specific system detailed.

1.6 APPLICABLE PUBLICATIONS:

A. Publications listed below form a part of this specification to extent referenced. Publications are referenced in text by basic designation only. Refer to the latest edition of all referenced Standards and codes.

B. American Iron and Steel Institute (AISI):

Specification and Commentary for the Design of Cold-Formed Steel Structural Members (Latest Edition).

C. American Society of Testing and Materials (ASTM):

A36/A36M-08 .....Standard Specification for Carbon Structural Steel

A108-07.....Standard Specification for Steel Bars, Carbon, Cold Finished, Standard Quality

A653/A653M-10 .....Standard Specification for Steel Sheet, Zinc-Coated (Galvanized) or Zinc-Iron Alloy-Coated (Galvanized) by the Hot-Dip Process

D. American Institute of Steel Construction (AISC):

1. Specification for Structural Steel Buildings – Allowable Stress Design and Plastic Design (Latest Edition)

2. Load and Resistance Factor Design Specification for Structural Steel Buildings (Latest Edition)

E. American Welding Society (AWS):

D1.1/D1.1M-10 .....Structural Welding Code – Steel

D1.3/D1.3M-08 .....Structural Welding Code - Sheet Steel

E. Military Specifications (Mil. Spec.):

MIL-P-21035B .....Paint, High Zinc Dust Content, Galvanizing Repair

PART 2 - PRODUCTS

2.1 MATERIALS:

A. Steel Decking and all Flashings: ASTM A653, Structural Quality.

B. Galvanizing: ASTM A653, G60.

C. Shear connector studs: ASTM A108, Grades 1015-1020, yield 350 Mpa (50,000 psi) minimum, tensile strength - 400 Mpa (60,000 psi) minimum, reduction of area 50 percent minimum. Studs of uniform diameter; heads shall be concentric and normal to shaft; stud, after welding free from any substance or defect which would interfere with its function as a shear connector. Studs shall not be painted or galvanized. Size of studs shall be as shown on drawings. Studs manufactured by a company normally engaged in the manufacturer of shear studs and can furnish equipment suitable for weld-through installation of shear studs.

D. Galvanizing Repair Paint: Mil. Spec. MIL-P-21035B.

E. Miscellaneous Steel Shapes: ASTM A36.

F. Welding Electrode: E60XX minimum.

G. Sheet Metal Accessories: ASTM A653, galvanized, unless noted otherwise. Provide accessories of every kind required to complete the installation of metal decking in the system shown. Finish sheet metal items to match deck including, but not limited to, the following items:

1. Metal Cover Plates: For end-abutting deck units, to close gaps at changes in deck direction, columns, walls and openings. Same quality as deck units but not less than 1.3 mm (18 gauge) sheet steel.

2. Continuous sheet metal edging: at openings and concrete slab edges. Same quality as deck units but not less than 1.3 mm (18 gauge) steel. Side and end closures supporting concrete and their attachment to supporting steel shall be designed by the manufacturer to safely support the wet weight of concrete and construction loads. The deflection of cantilever closures shall be limited to 3 mm (1/8 inch) maximum.

3. Metal Closure Strips: For openings between decking and other construction, of not less than 1.3 mm (18 gauge) sheet steel of the same quality as the deck units. Form to the configuration required to provide tight-fitting closures at open ends of flutes and sides of decking.

4. Seat angles for deck: Where a beam does not frame into a column.

2.2 REQUIREMENTS:

A. Steel decking depth, gage, and section properties to be as shown. Provide edges of deck with vertical interlocking male and female lip providing for a positive mechanical connection.

B. Fabricate deck units with integral embossments to provide mechanical bond with concrete slab. In combination with concrete slab, capable of supporting total design loads on spans shown.

C. Steel decking capable of safely supporting total, normal construction service loads without damage to decking unit.

D. Steel decking units shall include an integral system which provides a simple point of attachment for light duty hanger devices for flexibility for attaching hangers for support of acoustical, lathing, plumbing, heating, air conditioning and electrical items. System shall provide for minimum spacing pattern of 300 mm (12 inches) on centers longitudinally and 600 mm or 900 mm (24 or 36 inches) on centers transversely. Suspension system shall be capable of safely supporting a maximum allowable load of 45 kg (100 pounds) concentrated at any one hanger attachment point. System may consist of fold-down type hanger tabs or a lip hanger.

PART 3 - EXECUTION

3.1 ERECTION:

A. Do not start installation of metal decking until corresponding steel framework has been plumbed, aligned and completed and until temporary shoring, where required, has been installed. Remove any oil, dirt, paint, ice, water and rust from steel surfaces to which metal decking will be welded.

B. Coordinate and cooperate with structural steel erector in locating decking bundles to prevent overloading of structural members.

C. Do not use floor deck units for storage or working platforms until permanently secured. Do not overload deck units once placed. Replace any deck units that become damaged after erection and prior to casting concrete at no cost to the owner.

D. Erect steel deck in accordance with manufacturer's printed instructions.

E. Ship steel deck units to project in standard widths and cut to proper length.

F. Provide steel decking in sufficient lengths to extend over 3 or more spans, except where structural steel layout does not permit.

G. Place steel decking units on supporting steel framework and adjust to final position before being permanently fastening. Bring each unit to proper bearing on supporting beams. Place deck units in straight alignment for entire length of run of flutes and with close registration of flutes of one unit with those of abutting unit. Maximum space between ends of abutting units is 13 mm (1/2 inch). If space exceeds 13 mm (1/2 inch), install closure plates at no additional cost to owner.

H. Ceiling hanger loops, if used, must be flattened or removed to obtain bearing of units on structural steel.

I. Fastening Deck Units:

1. Fasten floor deck units to steel supporting members by not less than 16 mm (5/8 inch) diameter puddle welds or elongated welds of equal strength, spaced not more than 305 mm (12 inches) o.c. with a minimum of two welds per unit at each support. Where two units abut, fasten each unit individually to the supporting steel framework.

2. Tack weld or use self-tapping No. 8 or larger machine screws at 915 mm (3 feet) o.c. for fastening end closures. Only use welds to attach longitudinal end closures.

3. Weld side laps of adjacent floor deck units that span more than 1524 mm (5 feet). Fasten at midspan or 915 mm (3 feet) o.c., whichever is smaller.

J. Welding to conform to AWS D1.3 and done by competent experienced welding mechanics.

K. Areas scarred during erection and welds shall be thoroughly cleaned and touched-up with zinc rich galvanizing repair paint. Paint touch-up is not required for welds or scars that are to be in direct contact with concrete.

L. Provide metal concrete stops at edges of deck as required.

M. Cutting and Fitting:

1. Cut all metal deck units to proper length in the shop prior to shipping.

2. Field cutting by the metal deck erector is restricted to bevel cuts, notching to fit around columns and similar items, and cutting openings that are located and dimensioned on the structural drawings.

3. Other penetrations shown on the approved metal deck shop drawings but not shown on the structural drawings are to be located, cut and reinforced by the trade requiring the opening.

4. Make all cuts neat and trim using a metal saw, drill or punchout device; cutting with torches is expressly prohibited.

5. Do not make any cuts in the metal deck that are not shown on the approved metal deck drawings. If an additional opening not shown on the approved shop drawings is required, submit a sketch, to scale, locating the required new opening and any other openings and supports in the immediate area. Do not cut the opening until the sketch has been reviewed and accepted by the Resident Engineer. Provide any additional reinforcing or framing required for the opening at no cost to the Government. Failure to comply with these requirements is cause for rejection of the work and removal and replacement of the affected metal deck.

6. Reinforcement at Openings: Provide additional metal reinforcement and closure pieces as required for strength, continuity of decking and support of other work shown.

N. Installation of shear connector studs through previously installed metal deck to conform to AWS D1.1, except all studs will be installed with automatically timed welding equipment and as specified below:

1. Do not place reinforcing steel temperature mesh or other materials and equipment which will interfere with stud installation on steel deck until shear connector studs are installed.

2. Steel deck sheets shall be free of oil, rust, dirt, and paint. Release water in deck's valley so that it does not become entrapped between deck and beam. Surface to which stud is to be welded shall be clean and dry.

3. Rest metal deck tightly upon top flange of structural member with bottom of deck rib in full contact with top of beam flange.

4. Weld studs only through a single thickness of deck. Place decking so that a butt joint is obtained. Place studs directly over beam web, where one row of studs are required.

5. Ferrules specially developed for the weld-through technique must be used. Ferrules shall be appropriate for size of studs used and be removed after welding.

6. Submit report of successful test program for stud base qualification as required by AWS D1.1, Appendix K.

3.2 CLEANING:

Clean deck in accordance with manufacturer's recommendation before concrete placement.

END OF SECTION

COMMON WORK RESULTS FOR HVAC
(23 0500)

PART 1 - GENERAL

1.1 Scope of Work

A. See General Conditions and Supplementary Conditions.

B. The requirements listed under General Conditions and Supplementary Conditions and the General Requirements are applicable to this section and all subsequent sections of Division 23 and form a part of the Contract.

C. The term “Contractor” as used in Division 23 refers to the Mechanical Contractor for the Project.

1.2 Mechanical Division Index

23 0500	Common Work Results for HVAC
23 0503	Pipe and Tubes for HVAC Piping and Equipment
23 0523	General Duty Valves for HVAC Piping
23 0593	Testing, Adjusting and Balancing of Mechanical Systems
23 0700	HVAC Insulation
23 0923	Direct Digital Control System for HVAC
23 1123	Facility Natural-Gas Piping
23 2113	Hydronic Piping
23 2116	Hydronic Piping Specialties
23 3000	HVAC Air Distribution

1.3 CODES AND PERMITS

A. The Mechanical work shall be performed in strict accordance with the applicable provisions of the International Building Code; the 2009 Edition Uniform Plumbing Code; the 2009 Edition Uniform Mechanical Code, as adopted and interpreted by the State of New Mexico, City of Santa Fe, and the National Fire Protection Association (NFPA Regulations), current adopted edition, regarding fire protection, heating and ventilating and air conditioning systems and Electrical Systems. All materials and labor necessary to comply with these, regulations and ordinances shall be provided. Where the Drawings and/or Specifications indicate materials or construction in excess of code requirements, the Drawings and/or Specifications shall govern. The Contractor shall hold and save the Engineer/Owner free and harmless from liability of any nature or kind arising from his failure to comply with codes and ordinances.

B. Permits necessary for performance of the work shall be secured and paid for by the Contractor. All utility connections, extensions, meter pits and meter sets and tap fees for water, storm sewer, sanitary sewer and natural gas shall be paid for by the Contractor, unless otherwise specified herein.

1.4 The following lists some applicable codes and standards that shall be followed:

A. Applicable city, county and state mechanical, plumbing, health and sanitary codes, laws and ordinances.

B. National Electrical Manufacturer's Association Standards.

C. National Electrical Safety Code.

D. Underwriters Laboratories, Inc. Standards.

E. American National Standards Institute.

F. American Society for Testing Materials Standards.

G. Standards and requirements of local utility companies.

H. National Fire Protection Association Standard.

I. American Society of Mechanical Engineers Boiler and Pressure Vessel Codes.

J. Occupational Safety and Health Act.

K. Uniform Mechanical, Plumbing, and Fire Codes.

L. Guidelines for Construction and Equipment of Hospitals and Medical Facilities (AIA).

M. ANSI Power Piping Code.

N. Commercial and Industrial Insulation Standards (MICA).

O. American Gas Association.

P. Applicable publications of Sheet Metal and Air Conditioning Contractors' National Association, Inc. (SMACNA).

1.5 Record Drawings: See Division 1 for requirements associated with Project Record Drawings.

1.6 Qualifications

A. All mechanics shall be skilled in their respective trade.

B. All welders shall be certified in accordance with the ASME Boiler Test Code, latest issue.

C. Unprofessional and incomplete work will be rejected and shall be corrected at no additional expense.

1.7 Qualification Procedures: The storage, handling, and transportation of all refrigerants, oils, lubricants, etc. shall be accomplished in strict compliance with all State, local, and Federal Regulations including all requirements set forth by the Environmental Protection Agency (EPA) for the safe handling of regulated refrigerants and materials. The Contractor shall utilize qualified and/or certified personnel and equipment as prescribed by these requirements. In no situation shall any refrigerant be discharged to the atmosphere. All refrigerants recovered from all systems shall be returned to the Owner.

1.8 Hazardous Conditions: Protruding metal (bolts, steel angles, etc.) potentially hazardous to maintenance and operation personnel, shall be cut back and/or protected to reduce the risk of injury.

1.9 Hazard Signs

A. Equipment rooms, fan plenums, and similar areas containing moving or rotating parts, or other potentially hazardous environments shall include signs on all doors entering such spaces that shall read similar to the following: "Hazardous Area - Authorized Personnel Only."

B. The Contractor shall survey the final premises to determine where any such potentially hazardous areas exist. If the Contractor feels that hazards exist, that cannot be suitably protected through the above typical methods, he shall forward in writing to the Engineer, his concerns, and request for a decision concerning the referenced hazard, prior to the final inspection of the facilities.

1.10 Submittals

A. The Contractor shall submit to the Engineer submittal brochures of all equipment, fixtures and materials to be furnished under Division 23, including but not limited to the following:

1. Piping materials, valves, insulation materials and installation methods, vibration isolation devices, fire protection material and piping as well as pipe penetration installation methods and products for fire rated assemblies, fans, pumps, duct materials, and all equipment listed on

equipment schedules, fixture schedules and in related construction documents.

B. Unauthorized Substitutions: If substitute materials, equipment or systems are installed without prior review or are installed in a manner which is not in conformance with the requirement of this Specification and for which the Contractor has not received a written review, removal of all the unauthorized materials and installation of those indicated or specified shall be provided at no change in Contract amount.

C. All equipment shall be installed in accordance with the manufacturer's recommendations. Provide all accessories and components for optimum operation as recommended by the manufacturer.

D. Expense: All costs for the preparation, correction, delivery, and return of the submittals shall be borne by the Contractor.

E. Submittals and a resubmittal will be reviewed by the Engineer. If the Contractor fails to provide the required data with his second submittal, he will be charged for the third and subsequent reviews.

F. See Division 1 for additional submission requirements.

G. The Contractor shall submit a maximum amount of seven (7) copies of submittal brochures for review. Brochures shall be submitted within thirty (30) days after Contract Award. One (1) copy of all submittals will be retained by the Engineer, with the remaining six (6) sets returned to the Engineer. Additional sets of submittals, if required by the Contractor, shall be reproduced by the Contractor from the reviewed and marked sets returned at the Contractor's expense.

H. Complete data must be furnished showing performance, quality and dimensions. No equipment or materials shall be purchased prior to receiving written notification from the Engineer that submittals have been reviewed and marked either "APPROVED" or "FURNISH AS CORRECTED." Submittals returned marked "FURNISH AS CORRECTED" do not require resubmittal provided that the Contractor agrees to comply with all exceptions noted in the submittal, and so states in a letter to the Engineer.

I. Review of Submittals: Submittals will be reviewed with reasonable promptness, but only for conformance with the design concept of the Project and for conformance with the information indicated on the Drawings and stated in the Specifications. Review of a separate item as such will not indicate review of the assembly in which the item functions. Review of submittals shall not relieve the Contractor of responsibility for any deviation from the requirements of the Contract Documents, nor for errors or omissions in the submittals; or for the accuracy of dimensions and quantities, the adequacy of connections, and the

proper and acceptable fitting, execution, functioning and completion of the work. Review shall not relieve the Contractor of responsibility for the equipment fitting within the allotted space shown on the Drawings with all clearances required for equipment operation. Any relocation of Mechanical and/or Electrical equipment, materials and systems required to comply with minimum clearances shall be provided by the Contractor without additional cost under the Contract.

J. Shop drawings will be returned unchecked unless the following information is included: cover sheet shall be provided for each submittal of equipment, products and material proposed for use on the project. A common cover sheet for similar equipment (example: all air handling units or all fire protection products) is acceptable. The cover sheet shall list equipment by symbol number; reference all pertinent data in the Specifications or on the Drawings; provide size and characteristics of the equipment, name of the project and a space large enough to accept a review stamp. The data submitted shall reflect the actual equipment performance under the specified conditions and shall not be a copy of the scheduled data on the Drawings. Cover sheet shall clearly identify any deviations from the Specifications for submitted equipment, products, and materials.

K. Use of substitutions reviewed and checked by the Engineer does not relieve the Contractor from compliance with the Contract Documents. Contractor shall bear all extra expense resulting from the use of any substitutions where substitutions affect adjoining or related work required in this Division or other Divisions of this Specification.

L. If Contractor substitutes equipment for that drawn to scale on the Drawings, he shall prepare a 1/4" = 1'-0" installation drawing for each equipment room where a substitution is made, using dimensions of substituted equipment, and including piping, and Electrical equipment requirements, to verify that equipment will fit space with adequate clearances for maintenance. This 1/4" = 1'-0" fabrication drawing shall be submitted, for review by the Engineer, with the shop drawing submittals of the substituted. Failure to comply with this requirement will result in the shop drawings being returned unchecked.

1.11 Prior Approval

A. Requests for proposed substitutions shall be accompanied with catalog and technical data. Actual equipment components and options shall be highlighted and any discrepancies with the specified equipment noted.

B. Prior Approval: If the Contractor wishes to substitute equipment in place of that specified, they must comply with the requirements for substitutions described in the Project Manual and obtain prior approval from The City of Santa Fe. This requirement will be enforced.

1.12 Guarantee-Warranty

A. The Contractor shall guarantee that all mechanical systems shall be free from defects in workmanship, materials and performance to specified capacities and, that if such defects shall appear during a period of one year from date of final acceptance, they will remedy such defects to the satisfaction of the Engineer at no extra cost to the Owner, within a reasonable time. *The temperature control system shall be guaranteed for two years from date of final acceptance.* The contractor shall provide all extended warrantees to owner for items such as water heater tanks, a/c compressors, heat exchangers, etc.

1.13 Definitions:

A. The following words and phrases as used in the Specifications or on the plans are hereby defined:

B. Provide: Furnish and install all material and labor required for a complete installation ready for operation in accordance with the intent of the Contract Documents.

C. As Required: Indicates that the Contractor shall perform the work or provide the material as indicated in accordance with manufacturer's installation instructions; and in accordance with applicable codes or regulations; and in a workmanlike manner as defined by good local practice.

D. Or Equal: Indicates that the Contractor may substitute equipment by another manufacturer if the salient features of the equipment indicated by manufacturer's name and/or described are, in the judgment of the Engineer, adequate. Submittals for approval are required where indicated.

E. Contractor: Where the word(s) "Contractor" or "this Contractor" is/are used, they refer to the Contractor engaged to execute the work under this division of the Specifications only, even though he may be technically described as a Sub-Contractor.

F. Intent of the Contract Documents: The specific intent of these documents is to provide to the Owner, in a thoroughly functional condition, all the various systems, equipment, etc., indicated herein. Final authority over interpretation of the "intent" shall rest with the Engineer.

G. Shall: Indicates a mandatory requirement.

1.14 Inspection of the Site

A. The Drawings are prepared from the best information available and reflect all conditions commensurate with this information. However, the Contractor should visit the site prior to submitting a proposal and should verify the locations, sizes, depths, pressures, etc., of all existing utilities and familiarize himself with working conditions, hazards, existing grades, soil conditions, obstructions, etc. If it becomes evident that existing site conditions will impair the proper operation of the utilities, the Engineer should be notified in writing.

B. All proposals shall take these existing conditions and any revisions required into consideration.

PART 2 - PRODUCTS

2.1 Quality of Materials: All equipment and materials shall be new, and shall be the standard product of manufacturers regularly engaged in the production of plumbing, heating, ventilating and air conditioning equipment and shall be the manufacturer's latest design. Specific equipment, shown in schedules on Drawings and specified herein, is to set forth a standard of quality and operation.

2.2 Altitude Ratings: Unless otherwise noted, all specified equipment capacities are for an altitude adjusted to the facility’s location and adjustments to manufacturer's ratings must be made accordingly.

2.3 Electrical Services - Motors

A. Each motor, unless otherwise specified of 3/4 hp and greater, shall be designed for operation with 3 phase, 60 Hz, and highest available facility voltage. Unless otherwise specified, motors of 1/2 hp and less shall be designed for operation with single phase, 60 Hz, 120 volt Electrical service. Motors shall be 1750 rpm, squirrel cage, normal starting torque and normal starting current, in accordance with NEMA standards unless otherwise specified.

B. All motors 1 hp and above shall be NEMA premium efficiency motors with a minimum power factor of 0.85 on 1800/3500 rpm motors bear the NEMA premium efficiency stamp:

C. Furnish and install high efficiency motors manufactured by General Electric (Energy Saver), Marathon (Series E), Reliance Electric (XE), Westinghouse (TEE II), or prior approved equivalent having equal efficiencies.

D. Each motor shall be of the horsepower as specified and suitable for use at an altitude adjusted for the facility’s location. All motors shall have grease lubricated sealed ball bearings. Motors shall be factory lubricated. Motors shall be commercially dynamically balanced and tested at the factory before shipment and shall be selected for quiet operation. Motors for V-belt drives shall be provided with a cast iron or steel base, with slide rail and adjustable belt tension

screw device. The Contractor shall line up motors and drives and place motors and equipment on foundations ready for operation.

E. Unless indicated otherwise, motors shall be NEMA design B with a service factor of 1.15 with 40ºC rise and total temperature rise of 65ºC ambient when powered from the system voltage feeding the motor. TEFC motors shall have a service factor of 1.00 with total temperature rise of 65ºC in the above conditions. Motors located in areas exceeding 40ºC in the ambient shall be factory rated for the ambient temperature of the motor environment. Single phase motors shall generally be NEMA type N split phase induction motors with built-in thermal protectors. Unless otherwise specified for a particular application use electric motors with the following requirements:

F. Single-phase Motors: Capacitor-start type for hard starting applications. Motors for centrifugal fans and pumps may be split phase or permanent split capacitor (PSC).

G. Polyphase Motors: NEMA Design B, Squirrel cage, induction type. Each two speed motor shall have two separate windings.

H. Rating: Continuous duty at 100% capacity in an ambient temperature of 40ºC; if the Contractor proposes to furnish motors varying in horsepower and/or characteristics from those specified, he shall first inform the Engineer of the change and shall then coordinate the change with the Electrical Contractor and shall pay all additional charges in connection with the change.

I. The Contractor shall insure proper coordination between motors and variable frequency drives. See Section 23 also.

2.4 Electrical Wiring and Control Equipment

A. All wiring and conduit shall be furnished and installed as scheduled in Section 23, unless otherwise noted or directed.

B. The Contractor shall coordinate completely with all trades and Sub-Contractors as required to ensure that all necessary components of control work are included and fully understood. No additional cost shall accrue to the Owner as a result of lack of such coordination.

C. The Mechanical piping system may be bonded to the Electrical ground bus at the Electrical service equipment, but shall not under any circumstances be used as the main grounding electrode for the Electrical service.

D. The Electrical design and Drawings are based on the equipment scheduled and shown on the Drawings and should any Mechanical equipment requiring changes to the Electrical design be approved, the required Electrical changes

shall be made at the expense of the trade furnishing the changed equipment and at no cost to the Owner.

2.5 V-Belt Drives: V-belt drives shall be of fabric and rubber construction of approved manufacturer. Multiple belts shall be matched and all belts shall be adjusted to drive the apparatus properly and to prevent slippage and undue wear in starting. Unless otherwise specified in the Mechanical Equipment Schedule, drive horsepower ratings shall be 150 percent of the specified motor nameplate rating. Motor sheave shall be adjustable unless otherwise specified in the Equipment Schedule on the Drawings. Belt data (for location and size) shall be included with maintenance and O&M data.

2.6 Belt and Fan Guards

A. The Contractor shall provide for each V-belt drive a galvanized iron belt guard which shall be constructed around an angle iron frame, securely bolted to the floor or apparatus. The guard shall completely enclose drives and pulleys and be constructed to comply with all safety requirements. Hinged access doors not less than 6"x 6" shall be provided for access to motors and fan shaft for test purposes. Furnish wire mesh screen cover reinforced with bars or rods for double inlet fans and for all open inlets and outlets for propeller fans, installed so as not to restrict the air flow. All zerk fittings and oil cups shall be accessible without removing belt guards. All belt guards shall be constructed in accordance with OSHA requirements.

B. All flexibly connected pumps shall be provided with protective steel coupling guards.

2.7 Identification of Valves: Each valve shall be provided with a stamped metal tag secured to the valve. Tag shall indicate the valve number, the service and function of each valve. Contractor shall furnish two sets of prints of drawing showing floor plan for each floor with all valves accurately located and labeled. Drawing shall be submitted to the Engineer. These drawings shall be neat and easily read. In addition the Contractor shall provide a valve chart, typed neatly on 8 1/2" x 11" sheets, framed under glass, listing the number, size, location, function, normal operating position, on each valve installed under this Contract. Valves shall be listed by system, i.e. domestic cold water, hot water, chilled water etc. Tags shall be stamped brass 1-1/2" diameter, and secured to valves by beaded chain.

2.8 Piping System Identification

A. Means of Identification: All piping installed and/or modified as part of this project shall be identified by each of the means described below.

B. Piping identification shall meet the standards of the Federal Occupational Safety Health Act (OSHA) which refers to the ANSI Standard A13.1.

C. Inside or weather-protected piping systems shall be identified by means of an identifying legend on color coded background appropriately worded to indicate the "service" name of the pipe as shown on the Drawings. Labels shall be Seton - CODE STANDARD MARKERS, Styles CC, EE, FF, properly sized to fit the pipe being labeled. Each pressure-sensitive label shall be applied to clean, dry pipe or insulation. The applied label shall then be banded on both ends using SETON - ARROWS-ON-A-ROLL TAPE of the same color as the label. The banding shall wrap completely around the pipe or insulation and shall overlap for a secure bond. The arrows on the band shall indicate the direction of flow in the piping system.

D. Outdoor or non-weather-protected piping systems shall be identified by means of an identifying legend on color coded background appropriately worded to indicate the "service" name of the pipe as shown on the Drawings. Labels shall be SETON - ULTRA-MARK, properly sized to fit the pipe being labeled. Each pressure-sensitive label shall be applied to clean, dry pipe or insulation. The label shall wrap completely around the pipe or insulation and shall overlap for a secure bond. The arrows on the label shall indicate the direction of flow in the piping system.

E. Locations of Piping System Identification: The identifying legends and directional arrows described in the paragraphs preceding shall be located at the following points on each piping system:

1. Adjacent to each valve in piping system

2. At every point of entry and exit where piping passes through a wall.

3. On each pipe riser and junction.

4. At a maximum interval of 20 feet on pipe lines exposed and concealed above accessible ceilings.

5. Adjacent to all special fittings (regulating valves, etc.) in piping systems.

6. At every access door.

7. All piping that is Electrically heat traced shall have the designation “ELECTRIC TRACED” on 20 feet centers.

F. Attach pipe markers to lower quarter of the pipe on horizontal runs and on the centerline of vertical piping where view is not obstructed. Fasten pipe labels circumferentially around pipes.

G. Piping systems in Mechanical rooms shall be painted with the following color schemes:

Fire Line	Red
Gas Pipe	Yellow*
Domestic Water	Green
Chilled Water	Blue
Condenser Water	Gray
Heating Water	Orange

* Gas piping on the roof shall also be painted yellow.

2.9 Identification of Control System Devices: All controls, control panels, zone valves, pressure electric, electric pressure switches, relays and starters shall be clearly tagged and identified. Wording shall be identical to that on the control diagram in the Contract Drawings..

2.10 Equipment Identification: Contractor shall furnish equipment identification tags and equipment data sheets. The contractor shall attach the labels to the equipment, fill out the data sheets for every piece of the mechanical equipment and deliver the completed equipment data sheets to the owner's representative.

2.11 Equipment Nameplate: Each piece of equipment shall have a metal nameplate engraved with the manufacturer's name, the equipment's model number, and the equipment's serial number. The metal nameplate shall also be engraved with the equipment's capacity, voltage, horsepower, manufactured date and the equipment designation (i.e. AHU-1, EF-1, etc.) corresponding with the plans. This metal nameplate shall be fastened to the equipment with pop rivets. Plastic or stick-on type labels will not be acceptable.

2.12 Access Doors

A. Provide all access doors required for access to valves, dampers, coils, filters, controls, or other items for which access is required for either operation or servicing. All costs incurred through failure to perform this function as the proper sequence of this work dictates shall be borne by the Contractor. The type of access door shall be as required by the room finish schedule. Acoustical tile access doors shall be equal to Krueger Style B, Style A for acoustical plaster or Style C-CE for sidewall drywall or plaster construction.

B. Access doors shall be not less than 18" x 18" in size (or largest practical) except that larger panels shall be furnished where required, and panels in tile or other

similar patterned ceilings shall have dimensions corresponding to the tile or pattern ceiling.

C. Where access doors are installed in walls or ceilings required to have a specific fire rating, the access door installed shall be fire rated access door with UL label, as manufactured by Milcor or equivalent. Access door in 1-hour construction shall be Class C and access doors in 2-hour construction shall be Class B.

2.13 Sleeves

A. Each and every pipe and duct, regardless of material, which passes through a concrete slab, (except slab on grade), masonry wall, roof or other portion of the building structure, shall be free from the structure and shall pass through a sleeve furnished and installed by the Sub-Contractor responsible for the work involved.

B. Above grade and dry location sleeves shall be constructed from 20 to 22 gauge galvanized steel and shall be flush on both sides of wall surface penetrated. The sleeves shall be sized to allow free passage of the pipe to be inserted, and when this pipe is to be insulated, the sleeves shall be large enough to pass the insulation. Floor sleeves located in pipe chases shall extend up two inches (2") above the floor slab.

C. Sleeves passing through walls or floors on or below grade and/or in moist areas shall be constructed of galvanized steel, schedule 40 pipe, and shall be designed with suitable flange in the center of the floor or wall to form a waterproof passage. After the pipes have been installed in the sleeves, void space around the pipe shall be caulked to insure a waterproof penetration. Fire ratings of rated walls and floors shall be maintained by the use of approved materials.

D. Sleeves for copper piping below grade shall be schedule 40 Polyvinyl Chloride (PVC). All copper piping below grade shall be sleeved.

2.14 Floor, Ceiling and Wall Plates: In addition to the requirements of the above-referenced portions of this Specification, all Sub-Contractors shall furnish a chromium plated sectional escutcheon in each finished space on each pipe or hanger rod penetrating a wall, floor or ceiling. Escutcheons shall be sized to fit snugly to all lines and where the lines are insulated, the escutcheons shall be fit snugly over the insulation. These plates shall be provided with set screws so that they fit snugly against the finished surface. All equipment rooms are classified as finished space.

2.15 Warranty Service Calls: The contractor shall include the cost of 3 service calls during the warranty period unrelated to warranty items. All warranty calls shall be

documented in writing and submitted to the owner's representative the same day as the warranty call.

PART 3 – EXECUTION

3.1 Cooperation With Other Trades: The Contractor shall refer to other parts of these Specifications covering the work of other trades which must be carried on in conjunction with the Mechanical work so that the construction operations can proceed without harm to the Owner from interference, delay, or absence of coordination. The Contractor shall be responsible for the size and accuracy of all openings.

3.2 Drawings

A. The Mechanical Drawings show the general arrangement of all piping, ductwork, equipment, etc., and shall be followed as closely as actual building construction and work of other trades will permit. Whenever discrepancies occur between plans and Specifications, the most stringent shall govern. All Contract Documents shall be considered as part of the work insofar as this information furnishes the Contractor with details relating to design and construction of the building. Architectural and Structural Drawings shall take precedence over the Mechanical Drawings. Because of the small scale of the Mechanical Drawings, it is not possible to indicate all offsets, fittings and accessories that may be required. The Contractor shall investigate the structural and finish conditions affecting the work and shall arrange his work accordingly, providing such fittings, valves, and accessories as may be required to meet such conditions. Should conditions necessitate a rearrangement of piping, such departures and the reasons therefor shall be submitted by the Contractor to the Engineer for review in the form of detailed drawings showing the proposed changes. No such changes shall be made without the prior written approval of the Engineer. All changes shall be marked on a set of drawings that shall subsequently be turned over to the Engineer.

B. Should any doubt or question arise in respect to the true meaning of the Drawings or Specifications, the question shall be posed to the Engineer, whose decision shall be final and conclusive.

C. Installation of all equipment, piping, ductwork, and Electrical Systems shall be arranged to provide all clearances required for equipment operation, service, code compliance, and maintenance. Piping and ductwork systems shall not be routed through or above Electrical equipment room or Electrical equipment space designed within Mechanical equipment rooms.

D. The installation of all concealed Mechanical Systems shall be carefully arranged to fit within the available space without interference with adjacent Structural and Electrical Systems. The Contractor shall make all necessary provisions for

penetrations of piping and ductwork, including sleeves and blocking in structural systems. The exact location of all exposed Mechanical Systems, including grilles, registers, and diffusers; access doors; sprinkler heads; piping and ductwork exposed within finished areas; and other equipment and devices as applicable, shall be coordinated with the Engineer, who shall have final authority for the acceptance of the work as it specifically relates to the Architectural aesthetic design requirements for the facility. No Mechanical Systems shall be installed within the exterior building envelope, including walls, roofs, and floors, except where specifically indicated on the Mechanical Drawings and approved by the Engineer, and when installation of the Mechanical Systems is on the interior room side of the insulation system.

E. Maintenance Accessibility: All equipment shall be located in accordance with applicable codes and as approved by Owner representatives. Locations shall be convenient, safe and serviceable.

3.2 Field Measurements: The Contractor shall verify the dimensions and conditions governing his work at the building. No extra compensation shall be claimed or allowed on account of differences between actual dimensions, including dimensions of equipment, fixtures and materials furnished, and those indicated on the Drawings. Contractor shall examine adjoining work, on which his work is dependent for perfect efficiency, and shall report any work that must be corrected. Coordination of all Mechanical work within the building will be the direct responsibility of the Contractor. Review of submittal data in accordance with paragraph "Submittals" shall in no manner relieve the Contractor of responsibility for the proper installation of the Mechanical work within the available space. Installation of equipment and systems within the building space shall be carefully coordinated by the Contractor with all building trades. Each Contractor shall so harmonize his work with that of the several other trades that it may be installed in the most direct and workmanlike manner without hindering or handicapping the other trades. Piping interferences shall be handled by giving precedence to pipe lines that require a stated grade for proper operation. Sewer lines shall take precedence over water lines in determination of elevations. In all cases, lines requiring a stated grade for their proper operation shall have precedence over Electrical conduit and ductwork. Existing conditions requiring deviation from this precedence will require the prior approval of the Engineer. Installation of Mechanical equipment within the ceiling cavity shall be in the following order of priority: plumbing waste lines; supply, return and exhaust ductwork; steam and condensate piping; fire sprinkler mains; fire sprinkler branch piping and sprinkler runouts; roof drains; heating hot water and chilled water piping; domestic hot and cold water; pneumatic control piping; and miscellaneous special piping systems.

3.3 Equipment Support: Contractor shall provide support for equipment to the building structure. Contractor shall furnish all necessary structures, inserts, sleeves, and hanging devices for installation of Mechanical and Plumbing equipment, ductwork and piping, etc. Contractor shall completely coordinate installation of such devices with all trades and Sub-Contractors. Contractor must further verify with the Engineer

that the devices and supports are adequate as intended and do not overload the building's structural components in any way.

3.4 Protection of Materials and Equipment

A. The Contractor shall be responsible for the protection of all work, materials and equipment furnished and installed under this section of the Specifications, whether incorporated in the building or not.

B. All items of Mechanical equipment shall be stored in a protected weatherproof enclosure prior to installation within the building, or shall be otherwise protected from the weather in a suitable manner approved by the Engineer.

C. The Contractor shall provide protection for all work where necessary and shall be responsible for all damage done to property, equipment and materials. Storage of materials within the building shall be approved by the Owner prior to such storage.

D. Pipe openings shall be closed with approved, commercial caps or plugs to prevent lodgment of dirt or trash during the course of demolition and installation. Plumbing fixtures shall not be used by the construction forces. At the completion of the work, fixtures, equipment and materials shall be cleaned and polished thoroughly and delivered in a condition satisfactory to the Engineer.

E. Pressurized, high-pressure duct openings shall be sealed with fabricated, metal covers. Other duct openings shall be sealed tight with plastic, cardboard or other reasonable means.

3.5 Equipment and Air Intake Arrangements

A. All equipment shall be installed in a manner to permit access to all surfaces requiring access. All valves, motors, drives, lubrication devices, filters and other necessary items shall be installed in a position to allow removal for service without disassembly of another part.

B. Outside air, ventilation and combustion air intakes shall be separated from exhaust air outlets, flues, plumbing vent stacks, etc. to avoid infiltration of odors, fumes and other contaminants. Separation shall be 30 feet minimum for Health Care facilities and 15 feet minimum for all other facilities.

3.6 Flashing and Waterproofing: All building penetrations to outside shall be flashed and counter flashed as required to eliminate leaks.

3.7 Concrete Bases and Housekeeping Pads

A. Concrete bases and housekeeping pads shall be installed under all pieces of Mechanical equipment unless specifically deleted by the Specifications or Drawings.

B. Contractor shall be responsible for the accurate dimensions of all pads and bases and shall furnish and install all vibration isolators, anchor bolts, etc. Coordinate weight of concrete bases and housekeeping pads with the Structural Engineer.

C. Contractor shall provide concrete housekeeping pad foundations for all floor mounted equipment installed under this section unless otherwise shown on the Drawings. All concrete bases and housekeeping pads shall conform to the requirements. Pad foundations shall be 4" high minimum, unless otherwise indicated on the Drawings. Chamfer edges shall be 1". Faces shall be free of voids and rubbed smooth with carborundum block after stripping forms. Tops shall be level. Provide dowel rods in floor for lateral stability and anchorage.

D. Anchor bolts shall be high strength steel, “L” shape. Anchor bolt design shall be arranged and paid for by the Contractor.

E. Machinery bases, bed plates, sole plates, or vibration isolation units shall be carefully aligned, shimmed, leveled, then grouted in place with commercial non-shrink grout. When a flexible coupling is employed as a part of the drive train, the coupling shall be aligned before the machinery base is grouted.

3.8 Equipment Furnished Under Other Sections of These Specifications: Certain items of Mechanical equipment as listed on the Drawings and/or Specifications will be furnished under other sections of this Specification for Mechanical rough-in and connection under Division 23, including plumbing, domestic water and waste, process cooling water, compressed air, exhaust, etc. All required Mechanical services, including connection of such services to equipment shall be provided under Division 23.

3.9 Alignment of Flexible Couplings: Flexible couplings between motors and driven equipment shall be aligned by the qualified service technician after the equipment is installed and ready for operation. Proper aligning shall be provided within manufacturer’s maximum alignment tolerance at equipment operating conditions and temperature. Alignment shall follow unit manufacturer's written procedures using approved dial indication methods for parallel and angular alignment. The Contractor shall provide written certification that each device has been so aligned.

3.10 Lubrication: The Contractor shall provide all oil for the operation of all equipment until acceptance. The Contractor shall be held responsible for all damage to bearings while the equipment is being operated by him up to the date of acceptance of the equipment. The Contractor shall protect all bearings and shafts during installation.

Bearings for items of Mechanical equipment shall be marked at each bearing location as to whether the bearing is a sealed type or relubricatable type unit.

3.11 Tests: All tests shall be conducted in the presence of the designated and authorized Owner's Representative. The Contractor shall notify the Engineer one week in advance of all tests. Requirements for testing are specified under the sections covering the various systems. The Contractor shall furnish all necessary equipment, materials, and labor to perform the required tests. Piping systems shall not be covered or otherwise concealed until tests have been made and approvals obtained.

3.12 Installation Check

A. An experienced, competent, and authorized representative of the equipment listed below shall visit the site of the work and inspect, check, adjust if necessary, start up, and approve the equipment installation. In each case, the equipment supplier's representative shall be present when the equipment is placed in operation. The equipment supplier's representative shall revisit the job site as often as necessary until all trouble is corrected and the equipment installation and operation is satisfactory to the Engineer and Owner.

B. Each equipment supplier's representative shall furnish to the Engineer a written report certifying that the equipment (1) has been properly installed and lubricated; (2) is in accurate alignment; (3) is free from any undue stress imposed by connecting piping or anchor bolts; and, (4) has been operated under full load conditions and that it has operated satisfactorily.

C. Equipment requiring installation check includes the following:

1. All Equipment to be commissioned - Refer to Commissioning Specification.

3.13 Operation and Maintenance Instructions

A. The Contractor shall provide Owner with two (2) hard copies and four (4) electronic copies of the O & M Manuals. These shall include the controls as-built drawings and the T & B report, bound in with the other documentation. O & M Manuals shall identify pieces of equipment by manufacturer and model number as well as by the codes used on the drawings. The name, address, and phone number of local supplier for equipment and equipment parts shall be included in the manuals. Final payment will not be made until this manual has been approved by the Engineer and delivered to the Owner. The manual shall include:

B. Binder: All of the items described below shall be assembled in a three-ring binder, with a hard cover and durable cloth or plastic finish.

C. Index: A complete index shall be included at the front of the manual with tabbed dividers for each section. This index shall include reference to the T&B report and a tab divider for the report which will be supplied to the contractor by the owner.

D. Startup and Shutdown Procedure: A written description of the procedure for starting up and shutting down each mechanical system shall be included in the manual. This description shall include motors to start, valves to open, etc., in proper sequence and location of switches, starters, push buttons and valves.

E. Seasonal Changeover Procedure: A written description of the procedures necessary for seasonal changeover from heating to cooling and vice-versa shall be included in the manual.

F. Maintenance Procedure: A written description of all procedures necessary for proper maintenance of all heating and cooling equipment shall be included in the manual. Listings shall include required time interval between maintenance procedures. This shall include recommendations for water treatment procedures.

G. V-Belt and Filter: A list of all V-belts and filters with sizes, types and quantities required by each piece of equipment shall be included in the manual.

H. Manufacturer's Manuals and Parts: Operating and maintenance manuals and parts lists furnished by equipment manufacturers shall be included in the manual. Each grouping of equipment shall be subdivided with tabs in this section.

I. Equipment Suppliers and Equipment Data Sheets: provide the name, address, and phone number of the local suppliers for all equipment and parts, and include an Equipment Data sheet for each piece of equipment.

J. Temperature control system Operation & Maintenance Data

K. Test and Balance Report

3.14 Close-Out Submittals: Contractor shall certify in writing that all equipment furnished and all work done is in compliance with all applicable codes mentioned in these Specifications. Submit certifications and acceptance certificates to the Engineer, including proof of delivery of O&M manuals, spare parts required, and equipment warranties which shall be bound with O&M manuals.

3.15 Interrupting Services: The Contractor shall coordinate the installation of all work within the building in order to minimize interference with the operation of existing building Mechanical, Plumbing, Fire Protection, and Utility systems during

construction. Connections to existing systems requiring the interruption of service within the building shall be carefully coordinated with the Owner to minimize system downtimes. Requests for the interruption of existing services shall be submitted to the Owner in writing a minimum of two (2) days before the scheduled date. Absolutely no interruption of the existing services will be permitted without the written review of the Engineer.

3.16 Operation Prior to Acceptance

A. Operation of equipment and systems installed by the Contractor for the benefit of the Owner prior to substantial completion will be allowed providing a written agreement between the Owner and the Contractor has established warranty and other responsibilities to the satisfaction of both parties.

B. Operation of equipment and systems installed by the Contractor, for the benefit of the Contractor, except for the purposes of testing and balancing will not be permitted without a written agreement between the Owner and the Contractor establishing warranty and other responsibilities.

3.17 Clean-Up

A. It shall be the responsibility of each trade to cooperate fully with the other trades on the job to help keep the job site in a clean and safe condition. At the end of each day's work, each trade shall properly store all of his tools, equipment, any surplus materials and all debris caused by his portion of the work.

B. When all work has been finally tested, the Contractor shall clean all work installed by him, including all fixtures, equipment, pipes, ducts and all exposed work. All pipes shall be flushed out and left free of all obstructions. All plates, grilles, and other finished products shall be thoroughly cleaned and polished.

3.18 Demolition and Salvage

A. Where demolition of equipment or materials is required, this Contractor shall minimize cutting and exercise all due caution to leave undamaged surfaces, material and equipment meant to remain.

B. All existing items that are to be removed shall remain the property of the Owner unless declared as unsalvageable. Unsalvageable materials shall become the property of the Contractor and be removed from the site. Items declared as Owner's property shall be neatly stored on the site as directed by the Owner.

3.19 Site Visits and Observation of Construction

A. The Engineer shall make periodic visits to the project site at various stages of construction in order to observe the progress and quality of various aspects of

the Contractor's work, in order to determine in general if such work is proceeding in accordance with the Contract Documents. This observation by the Engineer however, shall in no way release the Contractor from his complete responsibility to supervise, direct, and control all construction work and activities, nor shall the Engineer have authority over, or a responsibility to means, methods, techniques, sequences, or procedures of construction provided by the Contractor or for safety precautions and programs, or for failure by the Contractor to comply with all law, regulations, and codes.

B. Prior to the "Final" observation visit, the attached "Final Observation Checklist" shall be completed by the Contractor. Any non-applicable items shall be marked "N/A". The completed form shall be forwarded to the Engineer indicating that all necessary items are complete and requesting a final observation within 10 days. The Engineer shall review the form and notify the Contractor of any uncompleted items within 7 days. A re-submittal of the form and a new final observation request by the Contractor is required if the form is returned and noted as incomplete.

3.20 As-Built Drawings

A. This Contractor shall prepare as-built drawings for the various component portions of the mechanical installations. These drawings shall be furnished to the Engineer after completion of the work. These drawings shall be prepared by marking up a set of contract drawings with red pencil to show changes made during construction after the various installations have been completed.

3.21 Requirements:

A. Warranty Service Calls: Contractors to include in their bids the cost of three (3) service calls during the warranty period for services that are unrelated to warranty items (i.e., for operational or maintenance items). Any such visits by the Contractor shall be documented by email to all parties, including the FD & C Project Manager, M & O and the school administration, on the same day as the warranty call.

B. Equipment suppliers shall be responsible for certifying that equipment is installed properly and shall submit written reports on equipment installation and performance if so requested by Engineer. In addition, suppliers shall be responsible for furnishing qualified personnel at the job site at any time requested by the Engineer during construction or warranty periods.

C. Prior Approval: If the Contractor wishes to substitute equipment in place of that specified, they must comply with the requirements for substitutions described in the Project Manual and obtain prior approval from Owner/Engineer. This requirement will be enforced.

D. The prior approval requirement will be enforced. If the contractor wants to substitute equipment in place of that specified, contractor must comply with requirements for substitutions in Instructions to Bidders.

E. DDC Control Contractor: Contractor to include in their bids the cost of a new laptop and provide all hardware and software programming and configuration of a complete building automation system (BAS) to Owner.

F. Contractor shall perform start-up and shut-down of mechanical equipment for seasonal changeover during the three year warranty period.

1. Shutdown of the evaporative cooler shall be as follows:

   a. Shut-off main water supply to coolers; open drain valve.

   b. Open all evap cooler hose bibbs on roof, disconnect 1/4" tube from cooler and blow out water, and remove stand-pipe for draining of cooler pan.

   c. Typical room or area: Shutoffs disconnect on unit, close discharge damper, and remove belt from pulley/motor (leave hanging on fan pulley).

   d. Kitchens, computer rooms, and other rooms with year round cooling requirements: unplug pump motor, but leave fan system operational.

2. Start-up of the evaporative coolers shall be as follows:

   a. Close all evap cooler hose bibbs on roof, reconnect 1/4" tube to cooler, and reinstall stand-pipe in cooler pan.

   b. Shut-off drain valve and open main water supply to coolers.

   c. Typical room or area: install belt on fan/motor, open disharge damper, and turn on unit disconnect.

   d. Kitchens, computer rooms, and other rooms with year round cooling requirements: plug pump motor back in.

   e. Verify float is adjusted correctly, check for leaks in water piping, verify belt is adjusted properly, verify pump works and wets media.

G Test and Balance by Contractor: Test and Balance (T & B) will be provided by the Contractor. Note in Sections 23 0500 and 23 0593 that, if the Contractor

calls for T & B and the systems are not ready, the Contractor is responsible to pay for the visit. ‘‘Ready” means simply that **a)** the equipment is in place (including ductwork, diffusers, piping, electrical power, controls, etc.) and **b)** the equipment operates when turned on. Include in the contract documents a form for the Contractor to sign, such as the form in Appendix B of this document. “Contractor Request for Test and Balance.” NOTE: It is not the Owner’s responsibility to pay hourly for the T & B firm to perform start-up of equipment or address the Contractor’s punch list.

3.22 Punch Lists

A. The contractor shall respond to the Engineer generated site observations lists in writing after the item has been corrected or completed. The contractor shall list the number of each item that they corrected or completed on this written document.

3.23 Testing, Adjusting and Balancing:

Refer to Section 23 0593.

Project: _____

Date Submitted:_____

Date of final Mechanical System observation requested:_____

General Contractor:_____

Mechanical Contractor:_____

CONTRACTOR'S MECHANICAL and PLUMBING CHECK LIST
(All APPLICABLE ITEMS MUST BE COMPLETED PRIOR TO FINAL OBSERVATION)

In advance of requesting a final Mechanical observation for installed Mechanical Systems, please check all items to be completed. For all items not applicable to this project mark N/A.

3.24 Plumbing/Piping

A. All plumbing fixtures are set, sealed and cleaned.

B. All domestic & HVAC pipe systems are insulated.

C. All pipe systems are identified with specified labels and directional arrows.

D. Floor sinks and drain grates are cleaned and debris removed.

E. Valve tags are installed.

F. Special equipment (water softeners, water heaters, piping systems, etc.) have been checked and put into service.

G. Medical gas systems have been checked and certified.

H. Special piping systems have been cleaned and pressure tested.

I. Limestone chips have been installed in acid dilution sumps.

J. Plumbing/piping connections have been completed to Owner furnished equipment and equipment furnished by other Contractors/Sub-Contractors.

K. Exterior wall hydrants have been cleaned.

L. Concrete collars have been installed at cleanout to grade, valve box, or other specified plumbing items.

M. Drains and relief lines from plumbing and HVAC equipment have been installed and secured in proper manner.

N. All plumbing equipment and areas of equipment have been cleaned and debris removed.

O. Strainers/suction diffusers have been cleaned.

P. Backflow preventers have been successfully tested by a certified testor and verified by the AHJ.

Q. Air has been vented from all coils and systems.

R. Water treatment systems have been charged and tested.

Chilled Water	Condenser Water
Hot Water	Steam/Condensate

S. Ethylene glycol system has been charged with correct mixture and tested.

T. Water systems have been cleaned and pressure tested.

Chilled Water	Condenser Water
Hot Water	Non-potable Water

Steam	Domestic Hot Water
Condensate	Domestic Cold Water
Fire Protection	Acid Waste and Vent
Sanitary Sewer	Heat Recovery Piping & Vent
Roof and Overflow Drains	Other (list)

U. PRV's have been adjusted (water, steam, gasses)

3.25 HVAC Equipment and Ductwork

A. All ductwork has been sealed and insulated.

B. Return air paths and transfer openings have been verified.

C. Air handlers have been cleaned inside and out and construction filters removed and replaced with final filters.

D. All air handling equipment has been started and operated for the specified time. All equipment isolators have been adjusted for specified deflection.

E. All VAV boxes, fan coils, or fan powered boxes are completed and operational.

F. All pump shafts and couplings have been aligned.

G. Ductwork, coils, housing, diffusers, registers and grilles have been cleaned.

H. Boilers have been fired and certified by the supplier/installer.

I. Cooling towers have been started and inspected by the supplier/installer.

J. Chillers have been charged, started and certified for operation by the supplier.

K. Fire dampers are accessible and fully operational.

L. All HVAC equipment has been lubricated.

M. HVAC equipment has been labeled in accordance with the Specifications.

N. Duct pressure testing is complete and accepted.

O. "HAZARDOUS AREA" signs installed where applicable.

P. Belt guards installed where applicable.

Q. Variable frequency drives have been tested by the manufacturer's representative and certified to in compliance with all of the specified requirements.

R. Testing and balancing has been completed, and deficiencies noted have been corrected.

S. Special systems have been started and tested, such as: humidification, laboratory hoods, kitchen hoods, and Owner furnished items.

3.26 Temperature Controls

A. Temperature control panels and devices have been labeled in accordance with the Specifications.

B. All control dampers close completely and edge and blade seals form tight seal.

C. All control valves have been piped as required by the Drawings.

D. Controls systems are completed and all control points are operating and recording properly.

E. All temperature control tubing and wiring is installed and secured in accordance with the Specifications and the Electrical code.

F. Smoke removal fans and/or smoke detectors have been tested for operation and shut-down.

G. Freeze stats have been tested ensuring fan shut-down and full damper closure.

H. The following specified items have been submitted:

1. Record drawings (to be submitted prior to final payment to the Contractor).

2. Operation and maintenance manuals.

3. Manufacturer's representative installation check and certification submitted (see list of equipment (Section 23 0500).

4. Testing and Balancing reports.

5. Test kits furnished to Owner.

6. Temperature control schematics and sequence of operation.

7. Wall mounted lubrication, valve, and temperature control charts have been installed.

PART-4 Munters Air Handling Unit spec

4.01 RELATED DOCUMENTS

A. Drawings and general provisions of the contract.

4.02 DESCRIPTION OF WORK

A. Furnish and install where indicated, factory assembled, natatorium environmental control / energy recovery system, including the following:

1. Aluminum Plate-type air-to-air heat exchanger
2. Supply and exhaust fans
3. Supply fan and exhaust fan motor VFD
4. Control Air Dampers
5. Supply and return air filters
6. DX cooling coil
7. Indirect fired gas heater
8. Complete DDC control system, factory installed, wired, and programmed, including interface capability with BAS.

4.03 QUALITY ASSURANCE

A. Wiring internal to the unit shall be wired to a numbered terminal strip for simplified identification and ease of trouble shooting. Units shall be ETL listed and labeled, classified in accordance with UL 1995/CAN/CSA/ No. 236-M90.

B. The manufacturer must have a quality management system in place, equal to the quality assurance standard ISO 9001-2000, for the design, manufacture, and service of heat exchangers and packaged ventilation/air conditioning equipment.

C. Standard catalog units requiring modification to meet these specifications, or units that are field assembled, shall not be considered or accepted.

D. To ensure manufacturer credibility, the manufacturer must have a net worth greater than five times the value of the equipment being bid. The manufacturer must also be able to demonstrate prior experience manufacturing pool heat recovery air handling systems by providing to the consulting engineer, prior to bid, a reference list of at least five similar jobs manufactured over the prior five years.

4.04 WARRANTY

A. Manufacturer shall warrant products to be free of defects in workmanship and material under normal usage for a period of 12 months from factory documented start-up or 15 months from date of original shipment, whichever occurs first.

Manufacturer shall maintain a Service Department, sufficiently staffed to handle all warranty claims in a timely manner.

4.05 SUBMITTALS

Manufacturer shall provide detailed product submittals that include all physical data, performance, electrical, control, installation, and other product data as required for proper engineering evaluation and contractor installation.

4.06 PRODUCT DELIVERY, STORAGE AND HANDLING

A. Provide Pool Ventilation/Heat Recovery Dehumidification Air Handling Unit in accordance with this specification, plans, and the corresponding Schedule. Units shall be sized to deliver the scheduled ACFM values at the jobsite elevation.

B. The Pool Dehumidification System shall be manufactured by Munters-Des Champs Products of Buena Vista, VA. Overall unit dimensions, weight, and arrangement of internal components shall be as shown on the bid documents. All units shall be factory assembled, internally wired, and 100% run tested to check operation, fan and blower rotation, and control sequence (when controls are furnished and wired by factory) before leaving the factory.

C. Unit(s) shall be bid in accordance with the following direction:

1. Munters-Des Champs products shall be the Base Bid.

2. Other Approved Manufactures: Other Manufacturers shall be listed as an alternate add or deduct to the Base Bid, and contractors must include as part of the pricing for such adds or deducts the engineering costs associated with redesign, as required by deviations in dimensions, weight, electrical, thermal performance, etc.

3. All units shall be capable of providing 100% O/A and shall use Outside air as the primary source of dehumidification. Units using refrigeration as the only source of dehumidification and providing just the minimum outside air shall not be acceptable.

4. Hot gas reheat coil shall be the only source of reheat along with the Air to Air heat exchanger. Additional sources of heat like electric, gas, or HW shall not be acceptable.

5. Alternate manufactures must be pre-approved by the consulting engineer, in writing, at least two (2) weeks prior to the bid date.

   In order to gain approval, alternate manufacture must:

a. Provide factory drawings detailing the overall dimensions and weights of proposed equipment.
b. Submit equipment performance, including psychometric charts with all state points clearly indicated, detailing the performance at the ASHRAE summer ambient design dry bulb, dew-point, and wet bulb conditions, along with the winter ambient design condition. Manufacturer must provide a line-by-line comparison of proposed equipment specification versus the specification provided here, with highlights of how the proposed equipment meets or exceeds this specification.
c. Provide DDC control sequence of proposed equipment, including all sensor locations and wiring diagrams.

4.07 CASING

A. BASE FRAME: The base of the package shall consist of an all-welded structural "C" channel steel frame with tubular and angular cross-members as required to maintain floor rigidity and frame stiffness. The base shall be painted with one coat of a lead-free, rust-inhibiting, alkyd metal primer, followed by two coats corrosion and weather resistant 100% acrylic latex paint. Four or more lifting lugs designed to work with clevises shall be an integral part of the structural frame and shall be welded on, or shipped loose for bolt on in the field where required to reduce shipping width.

'C' channel base frames, on roof curb mounted units, shall include structural angle, welded to the inner side of the 'C' channel web, such that the angle rests on top of the roof curb, and the 'C' channel extends down, along the exterior of the curb to serve as flashing. Gasket is to be furnished and installed by the contractor, sandwiched between the angle and the top of the roof curb. Equipment that requires separate flashing strips between the curb and the base of the unit shall be unacceptable.

B. UNIT CASING**:** 2" double wall casing. Exterior walls and roof shall be constructed of 18ga. G90 galvanized steel, coated with a primer on both sides, and two coats polyester on exterior. Exterior coating shall pass a documented 2,000-hour salt spray test per ASTM B117. Inner liner shall be 0.05" thick aluminum. 2", 1.5# insulation shall be secured between inner and outer walls. The insulation shall be secured between the inner and outer walls and shall not be exposed to any air streams. All roof and sidewall seams shall be positively sealed to prevent water and air leakage. Air leakage shall be less than 1% of design airflow at 1-1/2 times maximum unit operating pressure. All fastening hardware between wall panels shall be concealed within the wall for a clean exterior appearance with minimal penetrations. Roofs of outdoor mounted units shall be pitched to one side, with a gutter on the low side. Unit shall be constructed to limit frame and panel deflection to 1/200th of its span in any direction. Tubular frame or aluminum post type construction shall not be accepted due to excessive thermal bridging at panel joints, and poor weather seal characteristics.

The casing shall house the fans, motors, coils, heat exchangers, and all factory-supplied optional equipment. For outdoor units, intake and exhaust hoods shall be provided. All intake and exhaust penetrations shall be covered with an aluminum bird-screen, which is separate from the hood. Hoods may ship loose for field assembly and installation by contractor. When hoods are field installed, the seam formed by the hood and casing must be caulked with silicone by the Contractor to prevent water leakage. All intake hoods shall have a maximum 500 feet per minute face velocity through the free area intake. Hood construction shall match that of the outer casing.

C. ACCESS DOORS**:** Hinged access doors shall be provided for inspection and maintenance of fans, coils, filters, heat exchangers, and other areas requiring routine inspection/maintenance. Access doors shall be gasketed around the perimeter with weather-resistant closed-cell neoprene gasket. The door shall be insulated the same as the unit casing, and double-wall constructed with full-length stainless steel piano-type hinges for rigidity and airtight enclosure. A minimum of two adjustable glass reinforced nylon door latches shall be furnished for each hinged door. Each door handle shall be provided with large nylon roller cam for ease of operation and superior gasket compression. Each hinged door shall include a locking mechanism that requires the use of a tool to open for safety and security purposes prior to unit startup. Handles shall be operable from either side of the door. Doorframes shall be a minimum 16 gauge aluminized steel or 304L stainless steel, welded at the corners. Doors shall have adhesive-backed stickers applied to their exterior surfaces which indicate the compartment contents and any safety/hazards within the enclosure. All exterior doors shall be equipped with rain gutters.

D. FLOORS: Floor shall be constructed of 16 ga. aluminized steel, with all seams fully welded. Underside of floor shall be totally insulated with R-8 closed cell foam insulation. Entire Floor of unit shall be coated with Heresite. Floors shall have an upturned flange around the entire perimeter and around all interior chases to contain moisture within the unit. The entire floor and upturn flanges must be factory water tested and certified leak proof for a period of five years from the date of shipment. Multiple 1-1/2 inch floor drains shall be provided to route moisture to either side, or bottom of unit (see plans for specific drain locations). Unit drains shall be sized remove any condensate that is created within the casing as a natural part of the recovery, dehumidification, or evaporative cooling blow-down/overflow process. Each drain must be trapped separately by the contractor and piped to a floor or roof drain. Heat tracing may be required for drains in cold climates. Drains shall be flush with the unit floor so as not to create a trip hazard. Each floor penetration/ drain hole shall be circumferentially fillet welded to prevent water leakage under the unit floor. The use of sealants for this purpose shall not be acceptable. All drains and associated piping are to be fully welded and tested. Expanded aluminized steel gratings shall be installed over supply and return air openings. Gratings shall be Heresite coated on pool applications.

4.08 COUNTERFLOW PLATE HEAT EXCHANGER

A. The plate type heat exchanger shall be manufactured by the unit manufacturer. Manufacturers that require third party heat exchangers shall be considered unacceptable for lack of experience. Energy recovery heat exchanger modules shall be constructed of galvanized steel housing and aluminum heat transfer surface. The heat transfer surface shall be a continuous sheet of die formed and folded 6 mil thick 1100 aluminum alloy that provides a smooth, continuous path for minimum air resistance and maximum energy transfer. The die formed surface shall have embossed ribs and have raised and depressed truncated conical dimples that bear on each adjacent plate. The die forming creates additional surface area, insures high differential pressure capability without plate surface collapse, and increased heat transfer coefficients. The ends of the folded and formed energy transfer surface shall be sealed with silicone or embedded in a refractory cement to prevent leaking or cross contamination.

B. Heat exchanger performance and pressure drops shall be as specified on equipment schedule. Airflow through the heat exchanger module shall be counter flow to ensure maximum performance. Cross flow heat exchangers, heat pipe heat exchangers, rotating wheel type heat exchangers, run-around coils, and straight-through air flow patterns will not be acceptable due to reduced performance concerns at design conditions or excessive maintenance costs. The heat exchanger shall be capable of withstanding up to 10 inches of differential pressure without deformation and shall operate at temperatures up to 400 degrees Fahrenheit.

C. Heat exchanger tests shall conform to ASHRAE Standard 84-1991, “Method of Testing Air-to-Air Heat Exchangers” and ARI Standard 1060, “Rating Air-to-Air Heat Exchangers for Energy Recovery Ventilation Equipment.”

D. Heat exchanger to be epoxy coated for corrosion resistance.

4.09 SUPPLY AND EXHAUST FAN(S)

A. Fans shall be Type EPFN centrifugal plenum (plug) type, as manufactured by Twin City Fan & Blower, Minneapolis, Minnesota.

B. Fans shall have a sharply rising pressure characteristic extending through the operating range and continuing to rise beyond the peak efficiency to ensure quiet and stable operation. Fans shall have a non-overloading design with self-limiting horsepower characteristics and shall reach a peak in the normal selection area. All fans shall be capable of operating over the minimum pressure class limits as specified in AMCA's Standard 2408-69.

C. PERFORMANCE - Fans shall be tested in accordance with AMCA 211 and AMCA 311 test codes for air moving devices and shall be guaranteed by the manufacturer

to deliver rated published performance levels. Fans shall be licensed to bear the AMCA certified ratings seal for both sound and air.

D. CONSTRUCTION - Fans shall be designed without a scroll type housing and shall incorporate a non-overloading type backward inclined airfoil blade wheel, heavy-gauge reinforced steel inlet plate, structural steel frame, and shaft and bearings.

E. FRAME AND INLET PLATE - Inlet plates shall be of heavy-gauge reinforced steel construction. The inlet plate incorporates a removable spun inlet cone designed for smooth airflow into the accompanying inlet retaining ring of the fan wheel. A square, formed lip suitable for attachment of a boot connector shall surround the unit, or an optional round inlet collar can be provided.

F. WHEEL - Wheels shall have a spun non-tapered style blade, retaining ring on the inlet side to allow higher efficiencies over the performance range of the fan. Sizes 245 and smaller shall have airfoil-shaped extruded aluminum blades. Sizes 270 and larger shall have die-formed airfoil steel blades with the option of extruded aluminum blades. All wheels on direct drive arrangement 4 fans shall have airfoil-shaped extruded aluminum blades. All hollow blade wheels shall be continuously welded around all edges. Wheels shall have nine blades for high efficiencies. All wheels shall be statically and dynamically balanced on precision electronic balancers to a level of G6.3 (per ANSI 2-19) or better.

G. SHAFT - Shafts shall be AISI 1040 or 1045 hot rolled steel, accurately turned, ground, polished, and ring gauged for accuracy. Shafts shall be sized for the first critical speed of at least 1.43 times the maximum speed. All shafts must be dial indicated for straightness after the keyways are cut and straightened as required.

H. BEARINGS - Bearings shall be heavy duty, grease lubricated, anti-friction ball or roller, self-aligning, pillow block type and selected for a minimum bearing life (AFBMA L-10) in excess of 40,000 hours at the maximum fan RPM. All bearings shall be equipped with regreasable zerk fittings and, where necessary, extended lube lines for easy access for relubrication.

I. DRIVE - Motor sheaves shall be cast iron, variable pitch on applications 10 HP and smaller, and fixed pitch on 15 HP and larger. Drives and belts shall be rated for 150% of the required motor HP.

J. FINISH AND COATING - The entire fan assembly, excluding the shaft, shall be thoroughly degreased and deburred before application of a rust-preventative primer. After the fan is completely assembled, a finish coat of paint shall be applied to the entire assembly. The fan shaft shall be coated with a petroleum-based rust protectant. Aluminum components shall be unpainted.

K. ACCESSORIES - When specified, accessories shall be provided by Twin City Fan & Blower to maintain one source responsibility.

L. FACTORY RUN TEST - All fans prior to shipment shall be completely assembled and test run as a unit at the specified operating speed or maximum RPM allowed for the particular construction type. Each wheel shall be statically and dynamically balanced in accordance with ANSI/AMCA 204-96 "Balance Quality and Vibration Levels for Fans" to Fan Application Category BV-3, Balance Quality Grade G6.3. Balance readings shall be taken by electronic type equipment in the axial, vertical, and horizontal directions on each of the bearings. Records shall be maintained and a written copy shall be available upon request.

4.10 MOTORS AND DRIVES

A. Motors shall be factory pre-wired to VFD as specified. Motors shall be direct drive, TEFC, premium efficiency type motors shall be furnished for all fans. Belt driven motors are not acceptable in order avoid bearing contamination on fans exposed to pool air.

B. A VFD shall control fans. VFD's shall be factory installed, wired, and programmed.
C. VFD's shall be ABB model ACH 550, and shall be warranted for two years following unit shipment when started by factory-trained technician.

4.11 DAMPERS

A. All dampers shall be of the low leakage airfoil blade type with blade edge and side seals. Dampers shall be constructed of extruded aluminum frames (6063T5) of not less than 2.03 mm thickness. Blades shall be of extruded aluminum profiles with blade gaskets of extruded EPDM. Frame seals shall be of extruded TPE. Gaskets shall be secured in an integral slot within aluminum extrusions.

B. Bearings to be comprised of a celcon inner bearing fixed to a 11.11 mm aluminum hexagon blade pin rotating within a polycarbonate outer bearing inserted in frame. Linkage hardware shall be installed in frame side and be constructed of aluminum and corrosion resistant zinc & nickel-plated steel complete with cup-point trunnion screws for slip-proof grip.

C. Air leakage through a 48" x 48" damper shall not exceed 10.3 CFM/sq. ft against 4" W.G. differential static pressure with standard air. Standard air leakage data to be certified under the AMCA certified ratings program. Pressure drop through a fully open 48" x 48" damper shall not exceed 0.02" W.G. at 1000 FPM.

D. The following dampers shall be provided:

- OA intake, with factory installed and wired modulating actuator
- Recirculation Air, with factory installed and wired modulating actuator
- Heat exchanger bypass dampers, with factory installed and wired modulating actuators

- Evaporator bypass air damper with modulating actuator

4.12 REFRIGERATION COOLING SECTION

A. The packaged heat recovery system manufacturer shall provide a complete integral factory piped and wired mechanical refrigeration system consisting of hermetic scroll compressors, air-cooled condenser, pool water heat exchanger tubes. The refrigeration shall use R-410a as the working fluid.
B. Compressors shall be direct drive, hermetic, scroll type with centrifugal gear type oil pump providing positive lubrication to moving parts. Motor shall be suction gas-cooled and shall have a voltage utilization range of plus or minus 10 percent unit nameplate voltage. Internal temperature and current sensitive motor overloads shall be included for maximum protection. Compressors shall have vibration isolation to minimize vibration transmission and noise.
C. Each refrigerant circuit shall have independent externally compensated thermal expansion valve, solenoid valve, service pressure ports and refrigerant line filter-drier factory installed as standard.
D. Compressors should be mounted in a vestibule and should not be exposed to the pool air. Five-year compressor warranty shall be provided.

Condenser coils shall be of internally finned 1/2-inch copper tubes mechanically bonded to configured aluminum plate fins. Coils shall be leak tested at the factory to insure pressure integrity. The coils shall be rated at 450 PSIG.

4.13 HEATING SECTION:
INDIRECT FIRED GAS FURNACE (DRUM AND TUBE TYPE)

Indirect fired natural gas furnace, with drum (primary) and tubes (secondary) heat exchanger surfaces, constructed and tested to the appropriate ANSI standards for efficiency and safety. Burners shall be ETL and UL Certified for electrical safety in compliance with UL 1995 safety standard for heating, ventilating and cooling equipment. The complete heat exchanger/burner assembly shall bear an active and current E.T.L. label as having been E.T.L. approved using Z83.8 standards. Gas heaters shall be of the scheduled input capacity, with the efficiency and pressure drop as scheduled.

The heat exchanger construction will be of 18-gauge minimum thickness 304 stainless steel secondary tubes, formed and stamped with the ASTM A-249 certification for heat exchanger application. The collection boxes and headers will be constructed of 16-gauge minimum 304 stainless steel sheet. The flue collector is to be of type 304 stainless steel construction.

The heat exchanger will have strategically located 304 stainless steel drains. The unit will be mounted on rails of 11-gauge minimum mild steel material. Integral to the design of the base will be accommodation for the heat exchanger to expand and contract without damage to any part of the assembly.

A front shroud constructed of 18-gauge minimum G90 will be provided to accommodate the air handler transitional ductwork. 2” thick insulation, rated to 850 F will be permanently attached to the shroud, which will encase the insulation on all sides

A U.L. and F.M. listed air flow proving switch shall be piped and wired to the front shroud. It will include piping to the air stream, strategically located for proper airflow detection purposes. The air switch will be wired in conduit to the burner limit circuit.

A U.L. and F.M. listed manual reset high temperature limit control with adjustable set point shall be attached to the front shroud. The capillary tubing will be extended to a location that will best detect high temperatures. The sensing bulb will be firmly mounted to a bracket within the air stream. The high limit will be wired in conduit to the burner limit circuit.

Each drain will be piped in galvanized steel and terminate with a plugged fitting on the burner side of the supplied shroud. Contractor will be required to trap and pipe the condensate drain.

All tubes shall be welded to the collector boxes. No swage fitting of tubes is allowed. The heating section shall be designed so there is no requirement for a powered venter in standard rooftop applications.

Gas burners will be completely packaged with a single electrical and piping connection.

Firing mode, shall be 10:1 High Turn Down Modulation

Burner(s) shall comply with FM (Factory Mutual) requirements. Burners shall be fitted with orifices suitable for higher elevations (over 2000 feet).

The burner and exchanger shall be mounted together as a single heating module, and the entire assembly will be factory fire tested, prior to shipment.

Stainless steel flue pipe shall be furnished and installed by contractor in the field.

Heat Exchanger shall be warranted for 10 years from unit shipment. In order to validate the warranty of the assembly, a factory trained and authorized technician must perform the initial start up.

4.14 FILTERS

A. Supply and Return air filters: 2” 30% pleated air filters. A Magnehelic filter gauge with integral switch shall be included for each filter bank, and shall be factory installed and wired to unit- mounted controls system.
B.

4.15 ELECTRICAL CONTROLS

A. Units shall require one 460/3/60 power feed. An integral electrical control panel shall be provided that has a hinged access door and an approved locking device. All

required safety and automatic operating controls, including motor protection, and motor thermal overloads shall be included.

B. A fused control power transformer shall be furnished. All components shall be fully wired and tested prior to shipment and all major electrical components shall be UL listed. Electrical system shall be ETL listed and labeled, in accordance with UL 1995. A non-fused disconnect switch shall be furnished and installed on the unit. All internal power and control wiring shall be connected to a numbered terminal strip for easy troubleshooting. Any conduit used shall not be run across or come into contact with the floor. All wiring penetrations between air handler sections, and into electrical panel, shall be completely sealed to eliminate air and moisture transfer.

4.16 TEMPERATURE, HUMIDITY, AND PRESSURE CONTROLS

A. An electronic programmable microprocessor-based logic controller (PLC) with key pad input and LCD display shall be furnished to control the unit. Temperature and humidity set points and occupied/unoccupied mode operation functions including daylight savings, holiday programming and user overrides, shall be easily input by the operator. All temperature, humidity, and pressure sensors, as required to accomplish the specified sequence of control, shall be provided and factory wired to the extent possible. All external sensors shall be installed by the contractor
B. (Optional) Furnish remote LCD display/control panel to allow remote monitoring of process variables, filter and fan status, and to allow set points to be changed. Remote panel shall be provided by the manufacturer, and installed and wired by contractor.

4.17 GENERAL

Units that ship in separate pieces shall be field assembled by installing contractor. Contractor shall perform interconnecting wiring and piping connections between sections in the field. All hardware required for assembly of units shall be furnished by air handling unit manufacturer. Installing contractor shall furnish all gasketing and sealant required in the assembly process, and additional refrigerant as may be required for final charge adjustment after assembly.

4.18 EXAMINATION

A. Examine areas and conditions, with Installer present, for compliance with requirements for installation tolerances and other conditions affecting performance of the Work.

B. Examine casing insulation materials and filter media before air-handling unit installation. Reject insulation materials and filter media that are wet, moisture damaged, or mold damaged.

C. Examine roughing-in for hydronic, and condensate drainage piping systems and electrical services to verify actual locations of connections before installation.

D. Proceed with installation only after unsatisfactory conditions have been corrected.

4.19 INSTALLATION

A. Equipment Mounting: Comply with requirements for vibration isolation devices specified in Division 15 Section "Vibration and Seismic Controls for HVAC Piping and Equipment."

B. Arrange installation of units to provide access space around air-handling units for service and maintenance.

C. Do not operate fan system until filters (temporary or permanent. are in place. Replace temporary filters used during construction and testing, with new, clean filters.

4.20 CONNECTIONS

A. Coordinate piping installations and specialty arrangements with schematics on Drawings and with requirements specified in piping systems. If Drawings are explicit enough, these requirements may be reduced or omitted.

B. Comply with requirements for piping specified in other Division 15 Sections. Drawings indicate general arrangement of piping, fittings, and specialties.

C. Install piping adjacent to air-handling unit to allow service and maintenance.

D. Connect piping to air-handling units mounted on vibration isolators with flexible connectors.

E. Connect condensate drain pans using ASTM B 88, Type M copper tubing. Extend to nearest equipment or floor drain. Construct deep trap at connection to drain pan and install cleanouts at changes in direction.

F. Hot- and Chilled-Water Piping: Comply with applicable requirements in Division 15 Section "Hydronic Piping." Install shutoff valve and union or flange at each coil supply connection. Install balancing valve and union or flange at each coil return connection.

G. Coordinate duct installations and specialty arrangements with schematics on Drawings and with requirements specified in Division 15 Sections "Metal Ducts" and "Duct Accessories."

H. Connect duct to air-handling units with flexible connections. Comply with requirements in Division 15 Section "Duct Accessories."

4.21 FIELD QUALITY CONTROL

A. Retain first paragraph below to require a factory-authorized service representative to perform inspections, tests, and adjustments.

B. Manufacturer's Field Service: Engage a factory-authorized service representative to inspect, test, and adjust components, assemblies, and equipment installations, including connections.

C. Perform tests and inspections.

D. Manufacturer's Field Service: Engage a factory-authorized service representative to inspect components, assemblies, and equipment installations, including connections, and to assist in testing.

E. Tests and Inspections:

F. Leak Test: After installation, fill water and steam coils with water, and test coils and connections for leaks.

G. Fan Operational Test: After electrical circuitry has been energized, start units to confirm proper motor rotation and unit operation.

H. Test and adjust controls and safeties. Replace damaged and malfunctioning controls and equipment.

I. Air-handling unit or components will be considered defective if unit or components do not pass tests and inspections.

J. Prepare test and inspection reports.

4.22 STARTUP SERVICE

A. Perform startup service with factory technician at the jobsite for 3 days (8hrs/day) in one trip.

B. Complete installation and startup checks according to manufacturer's written instructions.

C. Verify that shipping, blocking, and bracing are removed.

D. Verify that unit is secure on mountings and supporting devices and that connections to piping, ducts, and electrical systems are complete. Verify that proper thermal-overload protection is installed in motors, controllers, and switches.

E. Verify proper motor rotation direction, free fan wheel rotation, and smooth bearing operations. Reconnect fan drive system, align belts, and install belt guards.

F. Verify that bearings, pulleys, belts, and other moving parts are lubricated with factory-recommended lubricants.

G. Verify that face-and-bypass dampers provide full face flow.

H. Verify that outdoor- and return-air mixing dampers open and close, and maintain minimum outdoor-air setting.

I. Comb coil fins for parallel orientation.

J. Verify that proper thermal-overload protection is installed for electric coils.

K. Install new, clean filters.

L. Verify that manual and automatic volume control and fire and smoke dampers in connected duct systems are in fully open position.

M. Starting procedures for air-handling units include the following:

N. Energize motor; verify proper operation of motor, drive system, and fan wheel. Adjust fan to indicated rpm.

O. Measure and record motor electrical values for voltage and amperage.

P. Manually operate dampers from fully closed to fully open position and record fan performance.

Q. Manufacturer’s service technician shall submit a report of his field work to the engineer/owner for approval.

4.23 ADJUSTING

A. Adjust damper linkages for proper damper operation.

B. Comply with requirements in Division 15 Section "Testing, Adjusting, and Balancing" for air-handling system testing, adjusting, and balancing.

4.24 CLEANING

A. After completing system installation and testing, adjusting, and balancing air-handling unit and air-distribution systems and after completing startup service, clean air-handling units internally to remove foreign material and construction dirt and dust. Clean fan wheels, cabinets, dampers, coils, and filter housings, and install new, clean filters.

4.25 DEMONSTRATION

A. Train Owner's maintenance personnel to adjust, operate, and maintain air-handling units. A minimum of 2 day training shall be provided by the manufacturer's local representative.

END OF SECTION

PIPE AND TUBES FOR HVAC PIPING AND EQUIPMENT
(23 0503)

PART 1 - GENERAL

1.1 Requirements

A. Conform with applicable provisions of the General Conditions, Supplementary Conditions and General Requirements.

B. Lead Ban: All piping, solder and flux used in the installation of piping systems furnished and installed under Division 23, delivering water for human consumption shall be lead free. The term lead free is defined as pipe which does not contain more than 8.0 % lead and solder and flux which does not contain more than 0.2% lead.

1.2 Related Sections: See Section 23 0500 for Common Work Results for HVAC.

1.3 Submittal Data: Contractor shall furnish complete submittal data for all piping materials, including manufacturer's specifications, certifications, class, type and schedule. Submittal data shall additionally be furnished for pipe hangers and supports, pipe sleeves including sealing and fire safing materials and installation.

PART 2 - PRODUCTS

2.1 Pipe and Pipe Fittings

A. Piping system materials shall be furnished as specified under the Sections describing the various piping systems. Pipe fittings shall be compatible with the piping systems in which they are installed.

B. Pipe fittings for steel piping systems shall be weld, screwed or Mechanical couplings. Butt weld fittings shall be manufactured by Weld-Bend, Laddish, or equivalent, standard or extra strong as specified in the applicable Sections of this Specification, conforming to ANSI Standard B16.9. All 900 weld elbows shall be long radius unless otherwise specified. Wherever tee connections are required in the piping system, manufacturer's straight or reducing tees shall be utilized. The use of fittings formed from welded pipe or pipe sections will not be permitted. Forged steel "Weld-0-Lets", "Branch-O-lets", and "Thred-O-Lets", as manufactured by Bonney Forge or equivalent, may be utilized for welded branch and tap connections up to one-half the size of the main. Forged steel half-couplings conforming to ANSI B16.11 may be used for drain, vent and gauge connections. Flanges shall be forged steel weld neck or slip-on, raised face, Class 150 or 300 as specified in the applicable Sections of this Specification with full face or ring type non-asbestos gasket material suitable for the application.

C. Socket weld fittings shall be Schedule 40, 2000 pound or Schedule 80, 3,000 pound construction, as specified in the applicable Sections of this Specification, conforming to ANSI B16.11, as manufactured by Grinnell or equivalent.

D. Screwed fittings shall be Class 150 standard or Class 300 extra heavy, black or galvanized, malleable iron or cast iron, as specified in the applicable Sections of this Specification, as manufactured by Grinnell or equivalent. Screwed malleable iron fittings shall conform to ANSI B16.3 and cast iron screwed fittings shall conform to ANSI B16.4. Bushing reduction of a single pipe size or use of close nipples will not be permitted.

E. Mechanical pipe couplings and fittings as manufactured by Victaulic or equivalent may be utilized for steel piping systems in lieu of butt weld fittings, as specified in the applicable Sections of this Specification. Couplings shall consist of ductile or malleable iron housing, with gasket, and nuts and bolts required to secure the unit. Gaskets shall be molded of synthetic rubber or other compound as recommended by the manufacturer for the fluid application including required pressure and temperature operating ranges. Fittings utilized in conjunction with Victaulic type piping system shall be manufacturer’s full flow cast iron, malleable iron, or steel fittings with groves designed to accept Mechanical couplings. All piping shall be prepared in accordance with manufacturer's specifications, furnished for factory or field installed roll grooves without metal removal. Square cut grooves will not be permitted. Assembly of couplings, fittings and piping shall be in accordance with manufacturer's published instructions. Gaskets, pipe ends, fittings and coupling housings shall be properly lubricated with water-based type lubricant furnished by the coupling manufacturer. Couplings shall be Victaulic Style 07 "Zero-Flex" or equivalent, rigid coupling through 24" size. For applications in conjunction with flexible connections to items of equipment such as pumps, water chillers, air handling units, etc., Victaulic Style 75 or equivalent couplings shall be utilized. Adapter connections between Class 125 and 150 flanged components and grooved piping system shall be made utilizing Victaulic Style 74 1 and 742 or equivalent flange adapter. Branch and tap connections up to one-half the size of the main may be made utilizing Victaulic Style 72 outlet couplings and Style 920 or 921 branch outlet connections.

F. Pipe fittings for copper piping system shall be wrought copper conforming to ANSI B16.22. Cast brass fittings conforming to ANSI B16.23, may be utilized for sanitary drainage, waste and vent systems, HVAC gravity condensate drainage system, and other non-pressure applications as approved by the Engineer.

G. Bronze flanges, Class 125 and 150, shall conform to ANSI B16.24. "T-drill" or equivalent mechanically formed tee connections and couplings may be utilized for water and drainage services. Installation of mechanically formed connections shall be in strict accordance with the manufacturer's specifications. Mechanically extracted collars shall be formed in a continuous operation by drilling pilot hole

and drawing out tube surface to form collar, having a height of not less than three times the thickness of tube wall. Adjustable collaring device shall insure proper tolerance and complete uniformity of the joint. Branch tube shall be notched and dimpled in a single process to provide free flow such that the branch tube penetrates the fitting sufficiently for proper brazing and ensures that the branch tube does not obstruct the flow in the main line. All joints shall be brazed with cadmium brazing alloy. Mechanically formed collars shall be listed by the National Standard Plumbing Code, I.A.P.M.O., and Underwriters Laboratory. The recovered tube plug shall be available to the Engineer for inspection.

H. Fittings for special piping systems including acid resistant waste and vent systems, high purity water distribution systems, shall be compatible with the piping system requirements and shall be as specified in the applicable sections of this Specification.

2.2 Floor, Wall and Ceiling Plates: Where uncovered, exposed pipes pass through finished floors, finished walls, or finished ceilings, they shall be fitted with chromium plated spun brass escutcheon plates. Plates shall be large enough to completely close the hole around the pipe, and shall be not less than 1-1/2" or more than 2-1/2" larger than the diameter of the pipes. All plates shall be securely held in place.

2.3 Unions

A. Piping 2-1/2" and larger shall be provided with bolted flange union connections. Weld flanges and bolting shall conform to ANSI B16.5. Bronze flanges shall conform to ANSI B16.24. Flange class shall be as specified in the applicable Sections of the Specifications.

B. Malleable iron grooved joint unions with brass to iron seats, Class 125, 250, or 300, as required by the application and compatibility requirements with the piping system fitting classification, conforming to MSS SP-77 and ANSI B16.39, shall be provided in piping systems 2" and smaller. Copper unions conforming to ANSI B16.22 shall be provided in copper piping systems. Union connections shall be installed at all control valves, equipment connections, and at other locations shown on the Drawings, and required for proper system operation and maintenance.

2.4 Dielectric Fittings: Dielectric insulating fittings shall be provided to connect dissimilar metals, such as copper tubing to ferrous metal pipe. Connections 2" and smaller shall be threaded dielectric union conforming to ANSI B16.39. Connections 2-1/2" and larger shall be flange union with dielectric gasket and bolt sleeves, conforming to ANSI B16.42. Insulating fittings will not be required between bronze valves and copper piping, unless otherwise specified.

2.5 Pipe Hangers and Supports

A. All piping shall be rigidly supported from the building structure by means of hanger assemblies properly selected and sized for the application in accordance with the manufacturer's recommendations and specifications.

B. Piping hangers shall be spaced according to the schedule in the table below and shall have hangers not more than one foot (1') on each side of every change in direction. Piping system shall be installed in an approved manner and shall not overload the building structural frame.

C. Contractor shall provide additional hangers and miscellaneous steel supports as may be required to distribute the piping system load over several structural members where required or directed. Maximum allowable spacing for piping other than fire protection piping shall be as follows:

Steel Piping	Maximum Spacing
1 /2"	6'-0"
3/4" and 1"	8'-0"
1-1/4" through 4"	10'-0"
5" through 10"	12'-0"
12" and larger	16'-0"
Copper Piping	Maximum Spacing
3/4" through 1-1/2"	6'-0"
2" and larger	10'-0"

D. Round rods supporting the pipe hangers shall be of the following dimensions:

1/2" to 2" pipe	3/8" rod
2-1/2" to 3" pipe	1/2" rod
4" to 5" pipe	5/8" rod
6" pipe	3/4" rod
8" to 12" pipe	7/8" rod
14" and 16" pipe	1" rod
18" and 20" pipe	1-1/4" rod
24" and 30" pipe	1-1/2" rod

E. Hanger rods shall be hot-rolled steel, ATSM A-36 or A575, galvanized, all-thread. Provide for controlling level and slope by turnbuckles or other approved means of adjustment and incorporate locknuts.

F. Cast iron soil, waste and vent piping shall be provided with steel clevis type hangers. Elcen No. 12 through 2" and No. 12C for sizes 3" and greater, at intervals as specified in the current UBC.

G. Fire protection system shall be supported in strict accordance with the requirements contained in the applicable NFPA pamphlets and Fire Protection Systems.

H. Hangers, clamps and other support materials in contact with copper piping shall be copper or copper plated to prevent electrolysis. Hangers for copper piping shall be copper plated split ring type Elcen No. 310, clevis type Elcen No. 312, or Elcen No. 313, or equivalent.

I. Hangers for steel HVAC and plumbing piping, including chilled water, heating water, steam, condensate return, domestic water, natural gas, compressed air, and other services as applicable shall be steel clevis type hangers, Elcen No. 12, or equivalent. Where shown on the Drawings and as required for the proper control of the system expansion and contraction, provide roller type hangers, Elcen No. 14 or equivalent.

J. Where piping is installed side by side, the Contractor may support the piping utilizing trapeze type hanger assemblies. Horizontal trapeze member shall be powder-coated, baked-on enameled, steel channel, not less than 1-1/2" x 1-1/2" x 12" gauge, or power strut or equivalent. Contractor shall provide heavier steel members as required for the load to be supported and the distance span. Trapeze hangers shall not be utilized for steam and condensate piping, fire and sprinkler piping, or plumbing drain waste and vent piping. Hanger rods shall be as specified above, properly sized for the load supported but not less than 5/8" diameter. Uninsulated copper piping shall be isolated from the steel trapeze in a manner approved by the Engineer. Individual pipe shall be guided on the horizontal member at every hanger point with power strut clamps. Provide full circle insulation shield, Elcen No. 218 or equivalent, for insulated piping at trapeze hangers with power strut clamps. Where shown on the Drawings and as required for the proper control of the system expansion and contraction, provide rolled pipe supports at the trapeze hangers, Elcen No. 15, or equivalent.

K. Special piping supports including roof mounted piping support, wall support racks, floor mounting pedestal type supports shall be provided as indicated on the Drawings, and as required for the proper support for the piping systems. Contractor shall provide shop drawings for all special piping supports and attachment.

L. Supports for special piping systems including plastic piping, glass piping, refrigeration piping shall be provided as recommended by the pipe manufacturer and as specified in the applicable Sections of this Specification.

M. Vertical piping shall be supported at each floor level by means of riser clamps, Elcen No. 39 and No. 339 copper clad for copper piping systems, or equivalent. Proper allowance for the expansion and contraction of the vertical risers shall be provided. Contractor shall submit shop drawings indicating proposed method for support and control of expansion and contraction of vertical piping.

N. The use of pipe hooks, chains, or perforated iron for pipe hanger supports will not be permitted.

O. All insulated HVAC piping systems including chilled water, heating water, steam, condensate return, and other systems as specified shall be provided with individual hangers sized to encircle the insulation. Hangers for domestic water and roof drain piping systems may be installed under the insulation. Mechanical Systems Insulation, for insulation thickness requirements. The specified HVAC piping systems where supported by means of trapeze hangers shall not rest directly on the trapeze horizontal member. The insulation at hangers and trapeze hangers shall be protected by means of half or full insulation shield, Elcen Nos. 218, 219, 240, as required, or equivalent.

P. Attachment of piping hangers to the building structure shall be provided in a manner approved by the Engineer. The Contractor shall provide concrete inserts, Elcen No. 65 or equivalent, in the building construction at the time the concrete is poured and hangers shall be attached to these inserts. Self-drilling expansion anchors, Federal Specification FF-S-325, may be used in concrete construction not less than 4" thick. Applied load shall not exceed manufacturer’s approved ratings. Power driven fasteners may be used in existing concrete or masonry not less than 4" thick where approved by the Engineer. Attachment to steel construction shall be by means of beam clamps and C-clamps as required for the proper application. Attachment to wood construction shall be by means of wood screws or lag bolts.

2.6 Pipe Sleeves

A. Pipe sleeves shall be furnished and set by the Contractor and he shall be responsible for their proper and permanent location. Piping will not be permitted to pass through footings, beams or ribs except with written consent of the Engineer. Pipe sleeves shall be installed and properly secured in place at all points where pipes pass through gypboard stud walls and concrete, and masonry construction and at all fire and smoke rated walls and partitions. Pipe sleeves, except sleeves in footings and beams shall be equal to Pipe Shields Incorporated Model WFB for walls, DFB for decks, or QDFB for corrugated decks, or equivalent. Each sleeve shall be adjustable, with annular spacing

packed with approved fire stop. Where insulated piping is installed, calcium silicate inserts to match the insulation thickness and extending l" past the sleeve on body ends, shall be provided. Pipe sleeves in concrete and masonry construction, footings and beams shall be Schedule 40 black steel pipe. Pipe sleeves in gypboard construction shall be galvanized steel metal. Sleeves shall be not less than 1" or more than 2" larger in diameter than the pipe to be installed. Pipe sleeves in floors shall extend 2" above finished floor in chases and equipment room areas unless otherwise approved by the Engineer. Openings between piping and sleeves shall be made watertight with plastic cement installed to a minimum depth of 2". Where pipes pass through exterior walls, the annular space between the wall and the pipe shall be sealed by sealing elements made of synthetic rubber, pressure plates, and cadmium plated bolts as manufactured by Link-Seal, or equivalent.

B. Uninsulated piping passing through fire walls, smoke wall, sound control walls and air plenum separations shall be sealed airtight to the adjacent construction by means of approved fireproof caulking materials per specifications.

C. Insulated piping passing through fire walls and smoke walls, shall be provided with a section of UL approved fire safing insulation to match the required insulation thickness or Pipe Shields, Inc. pipe shield sleeves as specified above at the required wall penetrations. The space between the piping sleeve penetration and the adjacent wall construction shall be sealed airtight with UL approved fireproof caulking material. Penetrations of gypboard sound walls and air plenum separators shall be caulked airtight with an approved caulking compound.

D. Sleeves for copper piping below grade shall be schedule 40 Polyvinyl Chloride (PVC). All copper piping below grade shall be sleeved.

PART 3 - EXECUTION

3.1 Piping Installation: Provide and erect, according to the best practices of the trade, all piping shown on Drawings and required for the complete installation of these systems. The piping shown on the Drawings shall be considered as diagrammatic for clearness in indicating the general run and connections, and may or may not in all parts be shown in its true position. The piping may have to be offset, lowered or raised as required or as directed at the site. This does not relieve the Contractor from responsibility for the proper erection of systems or piping in every respect suitable for the work intended as described in the Specifications and approved by the Engineer. In the erection of all piping, it shall be properly supported and proper provisions shall be made for expansion, contraction and anchoring of piping. All piping shall be cut accurately for fabrication to measurements established at the construction site. Pipe shall be worked into place without springing and/or forcing, properly clearing all windows, doors, and other openings and equipment. Cutting or other weakening of the building structure to facilitate installation will not be permitted. All pipes shall have

burrs and/or cutting slag removed by reaming or other cleaning methods. All changes in direction shall be made with fittings. All open ends of pipes and equipment shall be properly capped or plugged to keep dirt and other foreign materials out of the system. Plugs of rags, wool, cotton waste or similar materials may not be used in plugging. All piping shall be arranged so as not to interfere with removal and maintenance of equipment or filters or devices; and so as not to block access to manholes, access openings, etc. Flanges or unions as applicable for the type of piping specified shall be provided in the piping at connections to all items of equipment including refrigeration machines. All piping shall be so installed to ensure noiseless circulation. All valves and specialties shall be so placed to permit easy operation and access, and all valves shall be regulated, packed and adjusted at the completion of the work before final acceptance. All piping shall be erected to ensure proper draining.

A. Copper piping below grade: Copper piping located below slab shall be installed in schedule 40 PVC sleeve.

3.2 Joints

A. Caulked Joints: Caulked joints in hub-and-spigot piping and vent piping shall be packed firmly with white oakum, "Sealite No. 110", or hemp and caulked with pure molten lead not less than l" deep. Resilient molded gasket joints or "Ty-Seal" may be used in lieu of lead and oakum for sanitary soil, waste and vent piping. No-hub pipe and fittings will be accepted with the exception that 4-band couplings, Husky or equivalent, be used for buried installation.

B. Screwed Joints: Shall have American Taper pipe threads. Ream pipe ends and remove burrs after threading. Make up joints using Teflon tape or other approved compound applied to the male threads only.

C. Solder Joints (1 ½” or smaller): Copper tubing shall be cut square and burrs removed. Both inside of fittings and outside of tubing shall be well cleaned before sweating. Care shall be taken to prevent annealing of fittings and hard drawn tubing when making connections. Joints for sweated fittings shall be made with a noncorrosive paste flux and solid 95-5 Tin-antimony wire solder, unless otherwise specified. Cored solder will not be permitted. 50/50 lead solder shall not be permitted for any applications.

D. Brazed Joints: Copper tubing shall be cut square and burrs removed. Both inside of fittings and outside of tubing shall be well cleaned before brazing. Silver brazed joints shall use brazing material containing approximately 45% silver, 15% zinc, 25% cadmium and 15% copper. Joints shall conform to ASTM B-260 Class BAg-1. Approved materials include Mueller #122, Handy and Harmon "Easy Flo45" and United Wire and Supply "Sil-Bond 45".

E. Welded Joints: On black steel piping 2-1/2" and above in size, the joints may be welded. Welding shall be done using either gas or electric welding equipment. Certified welders shall be used. Welders shall be certified in accordance with Section IX of ASME Boiler and Pressure Vessel Code, latest edition. All pipe surfaces shall be thoroughly cleaned before welding. Each joint shall be beveled before being welded. Piping shall be securely aligned and spaced, and the width of circumferential welds shall form a gradual increase in thickness from the outside surface to the center of the weld. All fittings used in the welded piping systems shall be standard ASA fittings, and shall be of standard pipe thickness. The Contractor shall provide a fireproof mat or blanket to protect the structure and adequate fire protection at all locations where welding is done, any damage will be repaired or replaced at the Contractor's expense. The use of fittings formed from welded pipe sections will not be permitted.

F. Flanged Joints: Flanged joints shall conform to the American Standard for cast iron flanged pipe fittings, Class 125, 150 or 300 as specified in the applicable Sections of these Specifications. Gaskets shall be full face or ring type, non-asbestos, suitable for the service on which used.

3.3 Pump and Equipment Connections: All piping connecting to pumps and other equipment whether connected utilizing flexible connectors or with solid pipe connectors, shall be installed without strain at the pipe connection of the equipment. The Contractor shall be required, if so directed, to disconnect piping to demonstrate that piping has been so connected.

3.4 Expansion and Contraction: The Contractor shall make all necessary provisions for expansion and contraction of piping with offsets or loops and anchors as required to prevent undue strain. Contractor shall provide shop drawings for proposed method and arrangement for control of expansion and contraction of piping.

3.5 Protective Coatings: All underground steel pipes shall be wrapped with "Scotchwrap" No. 50 tape or equivalent, to give not less than two complete layers on the entire underground piping system, or piping shall have X-Tru-Coat factory applied plastic protective covering.

3.6 Flushing, Draining and Cleaning Pipe Systems: The Contractor shall flush out all water systems with water before placing them in operation. Other systems shall be cleaned by blowing them out with compressed air or nitrogen. After systems are in operation and during the test period, all strainer screens shall be removed and thoroughly cleaned. The startup screens shall be left in place after cleaning (the Owner will remove these screens at a later date).

3.7 Testing

A. Before any insulation is installed or before piping is covered or enclosed, all piping systems shall be tested and proven tight at not less than 150% of the

maximum service pressure which the piping systems will be required to handle. Piping system tests shall be as specified in the applicable sections of this Specification. All tests shall be witnessed and approved by the Engineer and the AHJ as required.

B. All labor, material, and equipment required for testing shall be furnished by the Contractor. The Contractor shall be responsible for all repairs and retesting as required. All instruments and other equipment whose safe pressure range is below that of the test pressure shall be removed from the line or blanked off before applying the tests. To perform tests, all lines shall be flushed and cleaned.

C. All safety measures required by codes or ordinances or reasonably applicable to the situation shall be provided by the Contractor in conjunction with the testing of the piping systems.

D. Equipment or piping to be pressure tested shall not be insulated, covered, or concealed prior to that test. Underground piping may be partially backfilled prior to pressure test when required for application of the test except that joints shall remain exposed until after the test. Tie rods, clamps etc., shall be in place and fastened.

E. Tests shall not be used to establish pressure ratings.

F. Protect all piping and equipment against overpressure, collapse from vacuum, and hydraulic shock during the filling, testing and draining procedures. Seats of iron valves shall not be subjected to a pressure in excess of the maximum cold working pressure of the valve. Pressure tests against other closed valves shall not exceed twice the normal rating.

G. Apply test pressure only after the system and test medium are at approximately the same temperature, preferably not less than 60ºF. Note that some applicable codes may require testing above a specified minimum temperature.

H. Remove from the system all pumps, turbines, traps, expansion joints, instruments, control valves, safety valves, rupture discs, orifice plates, etc., which might be damaged by the test, or are designated by the Engineer. Also remove all items such as orifice plates which might trap air in a system to be hydrostatically tested. Disconnect all instruments and air lines where copper tubing starts.

I. Systems may be separated into sub-systems for testing if such action will expedite or simplify the testing.

J. During hydrostatic testing of lines, provide temporary supports to prevent overstressing supports or hangers. When tests are completed, remove all

temporary supports, locks, stops, etc., and adjust supports for their cold load and alignment.

END OF SECTION

GENERAL DUTY VALVES FOR HVAC PIPING
(23 0523)

PART 1 - GENERAL

1.1 Requirements

A. All Valves shall conform with current applicable provisions of the General Conditions, Supplementary Conditions, and General Requirements.

B. All Valves shall meet the current MSS Specifications covering Bronze & Iron Valves. MSS-SP-80, MSS-SP-70, MSS-SP71, MSS-SP-85 where applicable.

C. Lead Ban: Valves used in the installation of piping systems delivering water for human consumption shall be lead free. The term lead free is defined as valves that do not contain more than 8.0% lead.

1.2 Related Sections

A. See Section 23 0503 for Pipe and Tubes for HVAC Piping and Equipment.

B. See Section 23 0500 for Common Work Results for HVAC.

C. See Section 23 0923 for Direct Digital Control System for HVAC.

1.3 Scope: Contractor shall furnish and install all valves and accessories necessary for satisfactory operation of the systems.

1.4 Valve Requirements

A. All Gate, Globe, Check, Ball valves shall be manufactured by Milwaukee, Nibco, Stockham, Powell or equivalent.

B. All lubricated plug valves shall be as manufactured by Rockwell or Walworth or equivalent.

C. All valves of the same type shall be products of a single manufacturer. Provide gate and globe valves with packing that can be replaced with the valve under full working pressure.

D. Each valve shall be provided with a stamped metal tag secured to the valve with metal chain. Tag shall indicate both the service and function of each valve. The Contractor shall furnish two prints of drawings showing floor plan for each floor with all valves accurately located and labeled. These drawings shall be neat and easily read.

PART 2 - PRODUCTS

2.1 General Service Valves, HVAC and Plumbing Systems

A. Gate Valves - 2" and smaller, Class 125

B. Valves 2" and smaller shall be cast of ASTM B-62 bronze, Class 125 construction, solid disc, rising stem, gland packed, non-asbestos packing.

Milwaukee 148 (threaded) or equivalent
Milwaukee 149 (solder), or equivalent

C. Gate Valves - 2" and smaller, Class 150

D. Valves 2" and smaller shall be cast of ASTM B-62 bronze, Class 150 construction, solid wedge disc, rising stem, union bonnet, gland packed, non-asbestos packing.

Milwaukee 1151 (threaded) or equivalent
Milwaukee 1169 (solder), or equivalent

E. Gate Valves - 2" and smaller, Class 300

F. Valves 2" and smaller shall be cast of ASTM B-62 bronze, Class 300 construction, solid wedge disc, rising stem, union bonnet, gland packed, non-asbestos packing.

Milwaukee 1184 (threaded) or equivalent

G. Gate Valves - 2-1/2" and larger, Class 125

H. Valves 2-1/2" and larger shall be of ASTM A-126 Class B Cast Iron, flanged ends, Class 125 construction, OS & Y Type, rising stem, bronze trim, non-asbestos packing.

Milwaukee F2885, or equivalent

I. Gate Valves - 2-1/2" and larger, Class 250

J. Valves 2-1/2" and larger shall be of ASTM A-126 Class B Cast Iron, flanged ends, Class 250 construction, OS & Y Type, rising stem, bronze trim, non-asbestos packing.

Milwaukee F2894, or equivalent

K. Globe Valves - 2" and smaller. Class 125

L. Valves 2-1/2" and smaller shall be of ASTM B-62, Class 125 construction, bronze trim, gland packed, non-asbestos packing.

Milwaukee 502 (threaded), or equivalent Milwaukee 1502 (Solder), or equivalent

M. Globe Valves - 2" and smaller, Class 150

N. Valves 2" and smaller shall be of ASTM B-62, bronze, Class 150 construction, bronze trim, composition disc, union bonnet, gland packed, non-asbestos packing.

Milwaukee 590 (threaded) or equivalent
Milwaukee 1590 (solder), or equivalent

O. Globe Valves - 2" and smaller, Class 300

P. Valves 2" and smaller shall be of ASTM B-62, bronze, Class 300 construction, bronze trim, union bonnet, gland packed, and non-asbestos packing.

Milwaukee 572 (threaded) or equivalent

Q. Globe Valves - 2-1/2" and larger, Class 125

R. Valves 2-1/2" and larger shall be of ASTM A-126, Class B Cast Iron, flanged ends, Class 125 construction, bolted bonnet, gland packed, non-asbestos packing.

Milwaukee F2981M, or equivalent

S. Globe Valves - 2-1/2" and larger, Class 300

T. Valves 2-1/2" and larger shall be of ASTM A-126, Class B Cast Iron, flanged ends, Class 300 construction, bolted bonnet, gland packed, non-asbestos packing.

Milwaukee F2983, or equivalent

U. Check Valves - 2" and smaller. Class 125

V. Valves 2" and smaller shall be cast of ASTM B-62 bronze, Class 125 construction, Y-pattern, swing type design, teflon seat, disc for steam service, Buna-N for water service.

Milwaukee 509 (threaded) or equivalent

Milwaukee 1509 (solder), or equivalent

W. Check Valves - 2" and smaller, Class 150

X. Valves 2" and smaller shall be cast of ASTM B-62 bronze, Class 150 construction, Y-pattern, swing type design, bronze seat, composition disc, teflon seat disc for steam service, Buna-N for water service.

Milwaukee 510 (threaded) or equivalent
Milwaukee 1510 (solder), or equivalent

Y. Check Valves - 2" and smaller, Class 300

Z. Valves 2" and smaller shall be cast of ASTM B-62 bronze, Class 300 construction, Y-pattern, swing type design, bronze redrilling disc.

Milwaukee 507 (threaded) or equivalent

AA. Check Valves – 2-1/2" and larger, Class 125

BB. Valves 2-1/2" and larger shall be of ASTM A-126 Class B, cast iron, flanged ends, Class 125 construction, bolted bonnet, bronze trim, swing type design.

Milwaukee F2974M, or equivalent

CC. Check Valves – 2-1/2" and larger, Class 250

DD. Valves 2-1/2" and larger shall be of ASTM A-126 Class B, cast iron, flanged ends, Class 250 construction, bolted bonnet, bronze trim, swing type design.

Milwaukee F2970, or equivalent

2.2 Ball Valves

A. Valves 6" and smaller shall be cast of ASTM B-62 bronze, Class 150 construction, 600 psi W.O.G. Two-piece body, chrome plated ball, blowout proof stem, reinforced TFE seats, non-asbestos packing.

Milwaukee BA-100 (threaded) or equivalent.
Milwaukee BA-150 (solder) or equivalent.

B. Valves installed on insulated services shall be provided with extensions, as required, such that operator does not interfere with insulation or insulation jacketing. Cutting or notching of the insulation or bending of handles shall not be permitted.

2.3 Balance Valves

A. Valves 1" and smaller: Bronze square head bronze construction, 250 psi steam working pressure, 250 psi W.O.G., threaded connections.

Walworth No. 576, or equivalent.

B. Valves 2" and smaller: Ball valve, bronze, Class 150 construction, 600 psi W.O.G., two piece body.

Milwaukee BA-100 (threaded).
Milwaukee BA-150 (soldered), as specified herein, or equivalent.

C. Valves 2-1/2" and larger: Lubricated plug valve, cast iron construction, 175 psi W.O.G., Class 125 flange connections, level handle for valves 4" and smaller, manual gear operator with handle wheel for valve 5" and larger.

Walworth No. 1797F, or equivalent.

D. Valves 2-1/2" and larger: Butterfly valve, cast iron, 200 psig working pressure, full lug pattern, Milwaukee MC-123-E, as specified herein, or equivalent.

E. Furnish level handle with infinite throttling positions and locking device for securing handle in any position for valves 4" and small and manual gear operator with hand wheel for valves 5" and larger.

F. Flow control and Flow Balance Valves: For calibrated flow balance valves and automatic flow control valves, see Specification Section 23 0517, Piping Specialties.

2.4 Natural Gas Valves

A. Valves 1" and smaller: Bronze natural gas cock, Walworth No. 590 (square head), Walworth 591 (flat head), or equivalent.

B. Valves 1-1/4" and larger: Lubricated plug valve, cast iron construction, 175 psig W.O.G., threaded connection for valves 2" and smaller, Class 125 Flange connections for valves 2-1/2" and larger, level handle operator.

Walworth No. 1796 (threaded) or equivalent
Walworth No. 1797F (flanged) or equivalent

2.5 Manual Air Vents and Drain Valves: For manual air vents and drain valves, see Specification Section 23 0517, Piping Specialties.

2.6 Non-Slam Silent Check Valves

A. Check valves for pump discharge and other required non-slam silent operation, shall be center guided, suitable for vertical or horizontal installation position, cast iron in semi-steel body, bronze disc and trim, stainless steel spring, Buna-n seats, Class 125 or 250 construction, as required by the application, wafer or globe flanged pattern for valves 2" through 10" size and flanged pattern for valves 12" and larger.

Milwaukee 1400 series (wafer) or equivalent.
Milwaukee 1800 series (globe) or equivalent.

PART 3 - EXECUTION

3.1 Installation: All valves shall be installed in locations that will allow easy operation and facilitate maintenance.

END OF SECTION

TESTING, ADJUSTING, AND BALANCING OF MECHANICAL SYSTEMS (23 0593)

PART 1 – GENERAL

1.1 REQUIREMENTS

A. Testing and balancing of the mechanical systems shall be under the direction and coordination of the Test and Balance (TAB) Agency who shall be responsible for coordination, supervision, execution, furnishing the data required by the test procedures, and report preparation for the testing, adjusting, and balancing requirements outlined in this Section.

B. Test and Balance by Contractor: Test and Balance (T & B) will be provided by the Contractor and should be included in the Contractor's bid. Contractor shall request commencement of the T & B work through the Mechanical Engineer. Note in Sections 23 0500 and 23 0593 that, if the Contractor calls for T & B and the systems are not ready, the Contractor is responsible to pay for the visit. ''Ready" means simply that **a)** the equipment is in place (including ductwork, diffusers, piping, electrical power, controls, etc.) and **b)** the equipment operates when turned on. Include in the contract documents a form for the Contractor to sign, such as the form in Appendix B of this document. "Contractor Request for Test and Balance." NOTE: It is not the Owner's responsibility to pay hourly for the T & B firm to perform start-up of equipment or address the Contractor's punch list. This Section serves to clarify the responsibilities of the Contractors and the TAB Agency.

C. During the testing, adjusting, and balancing work, the TAB Agency may identify issues and recommend corrective measures to the Contractor. *IMPLEMENTATION OF CORRECTIONS SHALL BE PERFORMED BY THE CONTRACTOR AT NO ADDITIONAL CHARGE*. If the Contractor believes recommended corrections are beyond the scope of work specified in the contract, it shall be the Contractor's responsibility to request and receive written change order authorization from the Owner prior to undertaking those recommended corrections.

D. The Contractor shall provide services of a qualified manufacturer's representative of the Direct Digital Control System and qualified representatives of the mechanical and electrical subcontractors as required for the TAB work and *CONTRACTOR SHALL INCLUDE CONTRACTOR'S COST FOR THE CONTRACTOR'S TESTING, ADJUSTING, AND BALANCING REQUIREMENTS IN HIS CONTRACT PRICE. SERVICES OF THE TAB AGENCY SHALL BE PROVIDED BY THE OWNER AND ARE NOT PART OF THE CONTRACT PRICE*.

E. Mechanical system installation, start-up, initial testing, the preparation of Operation and Maintenance Manuals, and operator training are the responsibility of the Contractor. The testing, adjusting, and balancing requirements in this Section do not relieve the Contractor from the obligations to complete all portions of the work in a satisfactory and fully operational manner.

F. TAB Agency shall include the following in its Scope of Work:

1. Review plans and submittals for types and locations of balancing devices being installed by Contractor and make recommendations for modifications to improve systems potential for satisfactory balance. Review Contractor's submittals to verify acceptance of proposed balancing devices.

2. Provide installation checklists and/or readiness check forms to Contractor for completion and return to the TAB Agency.

3. Perform a minimum of two field observations during the construction period.

4. Perform Testing and Balancing of the systems.

5. Schedule and supervise a functional performance test of the Direct Digital Control System. Contractor shall provide full-time services of electrical and control subcontractors for this testing.

1.2 References

A. AABC – National Standards for Total System Balance

B. ASHRAE 111 – Practices for Measurement, Testing, Adjusting, and Balancing of Environmental Systems

C. NEBB – Procedural Standards for Measurement, Testing, Adjusting, and Balancing of Environmental Systems

D. SMACNA – HVAC Systems Testing, Adjusting, and Balancing

1.3 Submittals by Tab Agency

A. Report on review of contract documents and submittals for types and locations of balancing devices being installed by Contractor indicating agreement, deficiencies noted, and any recommendations for modifications .

B. Field Reports indicating deficiencies in systems that would prevent proper testing, adjusting, and balancing of systems and equipment to achieve specified performance.

C. Report forms or outlines indicating adjusting, balancing, and equipment data required. Submit prior to commencing work.

D. Test Reports including data on forms containing information indicated in Schedules.

E. Draft copies of TAB Report for review prior to final acceptance of Project.

F. Copies of final TAB Report for Engineer for review, approval, and inclusion in Operation and Maintenance Manuals

G. Provide reports in letter size, 3-ring binder manual format complete with index page, indexing tabs, and with cover identification at front and side. Include set of reduced drawings with air outlets and equipment identified to correspond with data sheets, and indicating thermostat/temperature sensor locations.

1.4 QUALITY ASSURANCE

A. Perform total system balance in accordance with NEBB Procedural Standards.

1.5 SEQUENCING

A. Sequence TAB work in conjunction with work by the Contractor.

B. Sequence TAB work to commence after completion of systems and schedule completion of TAB work to occur before Substantial Completion of the Project.

PART 2 – EXECUTION

2.1 AGENCIES

A. An independent TAB agency will be responsible for coordination, supervision, execution, and report preparation for the testing, adjusting, and balancing requirements of this Section.

2.2 SYSTEM READINESS

A. Contractor shall verify that systems are installed, complete and operable before the commencement of TAB work. The contractor shall insure the following conditions:

1. Systems are started and operating in a safe and normal condition.

2. Direct Digital Control System and temperature controls are installed complete and operable including verification of proper end device operation and installation of required software and programming.

3. Proper thermal overload protection is in place for electrical equipment

4. Final filters are new and in place.

5. Coil fins are clean and combed if needed

6. Duct systems are clean of debris.

7. Fans are rotating correctly

8. Motors and bearings are properly lubricated.

9. Any excessive vibration has been corrected.

10. Fire/Smoke and volume dampers are in place, open, and operating properly.

11. All ductwork connections are complete, access doors are closed, and duct end caps are in place.

12. Air outlets are installed and connected.

13. Duct system leakage is minimized per the Specifications.

14. Water systems have been flushed, refilled, and vented.

15. Strainers or filters are in place and clean.

16. Control valves, check valves, and flow meters are installed and operating properly.

17. All manual valves, balancing devices, and control valves are open.

18. Pump rotation is correct and water is flowing.

19. System make-up water pressure is properly adjusted.

B. Sample Construction Checklist forms to assist in determining the readiness of systems for TAB work are provided at the end of this Section. The Contractor shall have personnel with direct knowledge complete the individual checklists to verify that systems are installed, complete and operable prior to the commencement of TAB work. *These checklists do not replace any manufacturer-recommended procedures*.

C. Prior to commencement of TAB work, the Contractor shall submit a written request to the Owner, including completed construction checklists forms as required, for mechanical inspection of the project. This inspection shall be

conducted by a duly appointed representative of the Mechanical Engineer's office, the Mechanical Contractor's Superintendent, and a representative of the TAB Agency. The inspection shall establish to the satisfaction of all parties that the systems are ready for testing and balancing.

D. If the TAB Agency finds that systems are not ready for TAB services Contractor will be subject to charges for TAB Agency's lost time and expenses.

2.3 PREPARATION

A. TAB Agency shall provide necessary calibrated instruments required for testing, adjusting, and balancing operations. TAB Agency shall make instruments available to Engineer to facilitate spot checks during testing.

B. Additional balancing devices, if required, shall be furnished and installed by Contractor.

2.4 INSTALLATION TOLERANCES

A. Air Handling Systems: Adjust to within plus or minus 10 percent of design conditions for supply systems and within plus or minus 10 percent of design conditions for return and exhaust systems.

B. Air Outlets and Inlets: Adjust total to within plus or minus 10 percent of design conditions to space. Adjust outlets and inlets in space to within plus or minus 10 percent of design conditions.

C. If tested air quantities are not within the required limits, the Contractor must replace fan pulleys, sheaves, belts, or add balancing dampers, etc. as required to meet the Specifications. If acceptable to Contractor, TAB Agency may install replacement pulleys, sheaves, or belts as required to meet the Specifications. Installation of pulleys, sheaves, or belts by TAB Agency shall have no effect on Contractor's warranty.

D. Water: Adjust to within plus or minus 10 percent of design conditions.

2.5 ADJUSTING BY TAB AGENCY

A. Ensure recorded data represents actual measured or observed conditions.

B. Permanently mark settings of valves, dampers, and other adjustment devices to allow settings to be restored. Set and lock memory stops.

C. After adjustments, take measurement to verify balance has not been disrupted or that such disruption has been rectified.

D. Leave systems in proper working order, replace belt guards, close access doors, close doors to electrical switch boxes, restore thermostats to specified settings, and restore Direct Digital Control System to normal operation.

E. At Final Inspection, recheck random selections of data recorded in report. Recheck points or areas as selected and witnessed by the Owner.

2.6 PROCEDURE BY TAB AGENCY

A. Air Handling and Distribution Systems

1. Adjust air handling and distribution systems to provide required or design supply, return, and exhaust air quantities at site altitude.

2. Make air quantity measurements in ducts by Pitot tube traverse of entire cross sectional area of duct.

3. The total air volume handled by the system shall be determined by means of a Pitot tube and draft gauge. The total air delivered by each duct shall be measured by Pitot tube traverses.

4. The average velocity in the duct shall be determined by velocity readings which are taken in the center of equally divided areas in the cross section of the duct. The number of areas in which velocity readings are to be taken is determined by the size of the duct, based on a maximum size of equally divided areas of 8 inches.

5. Measure air quantities at air inlets and outlets. The volume dampers, pressure controllers, outlets and other devices shall be adjusted so the air volumes will be as shown on the drawings.

6. Adjust distribution system to obtain uniform space temperatures free from objectionable drafts and noise.

7. Use volume control devices to regulate air quantities only to the extent that adjustments do not create objectionable air motion or sound levels. Effect volume control by duct internal devices such as dampers and splitters.

8. Vary total system air quantities by adjustment of fan speeds. Provide drive changes required. Vary branch air quantities by damper regulation.

9. Provide system schematic with required and actual air quantities recorded at each outlet or inlet.

10. Measure air static pressure conditions on air supply units, including filter and coil pressure drops, and total pressure across the fan. Make allowances for 50 percent loading of filters.

11. Adjust outside air automatic dampers, outside air, return air, and exhaust dampers for design conditions.

12. Measure temperature conditions across outside air, return air, and exhaust dampers to check leakage.

13. Where modulating dampers are provided, take measurements and balance at extreme conditions.

14. Measure building static pressure and adjust supply, return, and exhaust systems to provide required relationship between each to maintain approximately 0.5 inches positive static pressure near the building entries.

15. On completion of the test, the TAB Agency shall submit four copies of a typewritten report showing the tested values. This report shall include all flows, temperatures, temperature drops, and motors for the plumbing and mechanical systems. The CFM of each supply outlet with corresponding room number shall be included. This report shall include the fan RPM, nameplate data, the voltage and amperage readings of the fan motors, and the fan suction and discharge static pressure.

2.7 WATER SYSTEMS

A. Verify that Contractor has installed all temperature and pressure test plugs as required to obtain a thorough flow test.

B. Balance all water flows using pump curve data. Balance all chilled water coils, hot water coils, heat exchangers, cooling towers, boilers, and chillers to specified flow rates.

C. Provide air and water entering and leaving conditions on all equipment.

D. Record pump flow rates, pressures, running amperage, and full load amperage at design flow and shut off conditions.

2.8 SCHEDULES BY TAB AGENCY

A. Equipment Requiring Testing, Adjusting, and Balancing:

1. Air Handling Units

2. Fans

3. Air Filters

4. Air Inlets and Outlets

5. Heating System Pumps and Water Flows

6. Direct Digital Control System

B. The TAB Agency's report shall contain all test, adjustment, and balance data and information on any discrepancies from the specifications or design conditions. The following should be included as a minimum:

1. Title Page

Name of TAB Agency

Address of TAB Agency

Telephone Number(s) of TAB Agency

Project Name

Project Location

Project Engineer

Project Contractor

Project Altitude

Report Data

2. Summary Comments

Final Performance versus Design

Notable characteristics of systems

Identify any instances where the actual control sequence of operation varies from the designed and submitted sequences.

Summary of outdoor and exhaust air flows to indicate amount of building pressurization

Nomenclature used throughout report

Test conditions

3. Instrument List

Instrument Used

Manufacturer

Model Number

Serial Number

Calibration Date

4. Electric Motors

Manufacturer

Model/Frame

HP/BHP
Phase, voltage, amperage, nameplate, actual, no load

RPM

Service factor

Starter size, rating, heater elements
Sheave make, size, bore (as installed and any replacement)

5. V-Belt Drive

Identification/Location

Required driven RPM

Driven sheave diameter and RPM (as installed and any replacement)

Belt size and quantity

Motor sheave diameter and RPM (as installed and any replacement)

6. Air Moving Equipment

Location

Manufacturer

Model Number

Serial Number

Supply air flow - specified and actual

Return air flow - specified and actual

Outside air flow - specified and actual

Total external static pressure – specified and actual

Inlet pressure

Discharge pressure

Sheave - make/size/bore (as installed and any replacement)

Belts - make/size/quantity

Fan RPM

7. Return Air/Outside Air Data

Identification/location
Design air flow

Actual air flow

Design return air flow

Actual return air flow

Design outside air flow

Actual outside air flow

Return air temperature

Outside air temperature

8. Exhaust Fan Data

Location

Manufacturer

Model Number

Serial Number

Air flow - specified and actual

Total external static pressure – specified and actual

Inlet pressure

Discharge pressure

Sheave - make/size/bore (as installed and any replacement)

Belts - make/size/quantity

Fan RPM

9. Duct Traverse

System zone/branch

Duct size
Area

Design velocity

Design air flow

Test velocity

Test air flow

Duct static pressure

Air Temperature

Air correction factor

10. Water Systems

Location

Pump Manufacturer

Pump Model Number

Pump Serial Number

Water flow - specified and actual

Total pressure – specified and actual

Suction pressure

Discharge pressure

Full load amperage at design flow and shut off conditions

11. Controls System

Verify specified operating sequences and programming installed

Verify completion of Point Verification Form to be developed and completed by Controls subcontractor.

Develop procedure and supervise a functional performance test of the

Direct Digital Control System (Full time support from Controls sub and

Electrical sub required.)

12. Vibration Test (by TAB if required by Owner)

Location of points

Fan/pump bearing drive end

Fan/pump bearing opposite end

Motor bearing drive end

Motor bearing center (if applicable)

Motor bearing opposite end

Casing bottom or top

Casing side

Duct after flexible connection (discharge)

Duct after flexible connection (suction)

13. Test readings

Horizontal - velocity and displacement

Vertical - velocity and displacement

Axial - velocity and displacement

Normally acceptable readings, velocity and acceleration

Unusual conditions at time of test

Vibration source if non-complying

14. Life Safety Systems

The Contractor shall be required to demonstrate satisfactory operation of Life Safety Controls and Smoke Damper operation to the Test and Balance Agency unless the appropriate Authority Having Jurisdiction requires separate verification by the local Fire Marshal.

END OF SECTION

HVAC INSULATION
(23 0700)

PART 1 - GENERAL

1.1 Requirements

A. Conform with applicable provisions of the General Conditions, Supplementary Conditions and General Requirements.

B. Common Work Results for HVAC.

C. The Midwest Insulation Contractors Association and Industrial Insulation Standards, 3rd Edition, 1988 shall be utilized as a standard for the work provided under this Specification.

D. Materials shall conform to applicable ASTM standards.

1.2 Scope

A. Domestic hot water pipe including circulating hot water, interior roof drains including roof drain bowls, interior overflow roof drains including overflow roof drain bowls, domestic cold water piping, hot water heating pipe, steam and condensate pipe, chilled water pipe, and condensate drain pipe.

B. Ducts, including supply air and outside air ducts and plenums. Return air ducts and plenum as specified herein and as indicated on the Drawings.

1.3 Fittings

A. All fittings except as otherwise specified, shall be insulated with the same material and thickness as specified for the pipe.

B. Unions, flanges and valves on hot water, will not require insulation.

1.4 Testing: All piping and ductwork shall be tested in accordance with the applicable Specification Sections, before any insulation is applied.

PART 2 - PRODUCTS

2.1 Insulation: Insulation shall be as manufactured by Owens-Corning Fiberglas, CertainTeed, Johns-Manville, or Armstrong, or equivalent, and shall be equal to that specified below. Insulation and all materials on the interior and exterior surfaces of ducts, pipes, and equipment shall have a composite fire and smoke hazard rating not exceeding: Flame spread - 25; fuel contribution - 50; smoke developed - 50, as determined in accordance with ASTM Standard E-84. Linings in ducts, plenums, and

equipment shall meet the Erosion Test Method described in Underwriters' Laboratory Publication No. 181. Insulation shall have a "k" factor of 0.23 at 750F mean temperature unless otherwise indicated. All insulation materials used for valves and fittings shall have the same ratings as the insulation. Information must be submitted to Engineer, by means of manufacturer's literature showing that the materials conform to above Specification without exception.

2.2 Fittings

A. Valves and fittings, where required to be insulated, shall be covered with the same fabricated or molded material and thickness as specified for the pipe insulation. The insulation shall be finished with two coats of fitting mastic with fiberglass fitting tape embedded between coats.

B. Valves and fittings with systems specified to be covered with metal, canvas, or polyvinyl chloride (PVC) jacket shall be covered with material to match piping system jacketing unless otherwise specified herein and accepted by the Engineer.

C. Polyvinyl chloride (PVC) preformed fitting covers with fiberglass inserts may be used on valves and fittings. PVC fitting covers shall have a composite fire and smoke hazard rating not exceeding; flame spread - 25; smoke development - 50.

2.3 Metal Jacketing: Metal jacket shall be 0.016-inch smooth or embossed aluminum backed with a moisture barrier. Aluminum jacketing shall be installed where specified herein or otherwise indicated on the Drawings.

2.4 Pipe Hangers and Supports

A. All insulated chilled water piping systems and other piping as specified herein, shall be provided with individual hangers sized to encircle the insulation. Hangers for domestic water, heating water, roof drains, and additional plumbing systems as specified herein may be installed under the insulation, provided that the vapor barrier system for cold piping and the hanger rods are protected from the formation of condensation by application of a heavy coating of vapor barrier mastic material.

B. Insulated piping supported by means of trapeze hangers or roller type hangers shall not rest directly on the hanger or support.

C. The insulation at hangers, trapezes and supports shall be protected by means of galvanized steel insulation shields. High density calcium silicated insulation or thermal hanger shields as manufactured by Pipe Shields, Inc., or equivalent shall be provided at hangers, trapezes, and supports.

2.5 Pipe Sleeves

A. Pipe sleeves shall be provided at all penetrations through concrete and masonry construction and at all fire rated and smoke rated walls and penetrations. Insulated piping passing through fire walls and smoke walls shall be provided with a section of UL approved fire safing insulation from metal through required insulation thickness, or Pipe Shield, Inc. insulated pipe sleeve, or equivalent. The space between the piping sleeve penetration and the adjacent wall construction shall be sealed air tight with UL approved fireproof caulking material.

PART 3 - EXECUTION

3.1 Hot Water Piping: All building heating water piping shall be insulated with 1" thick Fiberglas preformed pipe insulation with All Service Jacket (ASJ). Fittings shall be finished with fitting mastic reinforced with fiberglass fitting tape and finished to a smooth surface. PVC fitting covers shall be secured with staples and tacks. Piping exposed to the exterior shall have 2" thick insulation.

3.2 Suction Diffusers: Suction diffusers on chilled water and heating water pumps shall be insulated with the same insulation materials specified for the piping system, except that means shall be allowed to remove the suction strainers without damaging the insulation.

3.3 Supply Ducts

A. All supply air ducts shall be insulated except pre-insulated flexible duct, ducts with acoustical lining.

B. Concealed supply air ducts handling cold air or a mixture of hot and cold air and outside air ducts, except ducts insulated internally with acoustical lining shall be insulated with 1-1/2" thick, 3/4 lb. density (RC=6.0), foil scrim kraft faced fiberglass (FSK). The insulation shall be held in place with spot daubing of a quick tacking rubber base adhesive on approximately 6 " centers. All end and longitudinal joints shall be butted firmly and the vapor barrier jacket overlapped not less than 2", stapled, and sealed continuously with a vapor barrier mastic. Gaps or fishmouths shall be re-stapled and sealed with mastic. Ducts over 24" in width shall have Mechanical fasteners attached 18" on centers. Self locking washers shall be applied and the remaining pin clipped. All penetrations of the FSK jacket such as pins, tears, and shears shall be sealed with FSK tape and vapor barrier mastic. Damper rod controls shall have the insulation neatly trimmed and sealed to allow proper operation of the damper.

C. Exposed supply air ducts located in equipment rooms and in finished rooms, except sheet metal ducts insulated internally with acoustical lining, shall be insulated as specified above for cooling ducts and covered with glass cloth covering. Apply white mastic (Sealfas) at a rate of 60 to 70 sq.ft. per gallon,

embed fiberglass mesh, smooth all wrinkles and apply finish coat of Sealfas, or equivalent.

D. Return air and exhaust ducts and plenums shall be lined with acoustical lining where shown on the Drawings and where required to control noise.

3.4 Aluminum Jacketing

A. Aluminum jacketing shall be installed on all insulated piping systems exposed within the Mechanical equipment spaces, which are installed, exposed below 8 feet above the floor, where exposed to physical damage, on outdoor insulated piping and ductwork, and where noted on the Drawings.

B. The jacketing shall be applied with joints overlapped 2" and located at the 3 o'clock or 9 o'clock position to shed water. Joints and seams shall be caulked with an approved weatherproof caulking when located outdoors. The insulation will be banded 12" on centers or screwed in place 3 " on center.

C. Fittings and valves shall have insulation covered with metal jacket, as specified herein, or PVC fitting covers, painted to match adjacent metal jacket.

3.5 Termination of Insulation: The termination of all insulation on pipes, at uninsulated valve connections, or unions, etc., shall be beveled and finished same as called for on all fittings.

3.6 Acoustical Lining: Acoustical lining shall be 1" thick, 1-1/2 lb. density with a factory applied black coating for duct specified to be lined. All acoustic lining shall have a fire and smoke hazard rating not exceeding: Flame spread - 25; Smoke developed - 50. The lining shall be applied using Childers CP-88 adhesive and also secured on not more than 16" centers with Stick-Clips (on concrete) or welded pins (on metal) and held with washers not less than 1-1/4" diameter. The acoustic liner shall be installed to completely line the ducts. (Return air and exhaust only.)

3.7 Victaulic Couplings: Where Victaulic type couplings or similar piping systems are used, all couplings shall be insulated with insulation materials and thickness equal to the piping system. Insulation of couplings shall be as specified herein for fittings.

END OF SECTION

DIRECT DIGITAL CONTROL SYSTEM FOR HVAC
(23 0923)

PART 1 - GENERAL

1.1 SECTION INCLUDES

A. This specification provides the requirements for the installation, programming and configuration of a complete building automation system (BAS). Furnish all labor, materials, equipment, and service necessary for a complete and operating temperature control system, utilizing a high-speed, peer-to-peer network of Direct Digital Controls, color graphic displays, routers, repeaters, and pneumatic and electronic interfaces and actuation devices, as shown on the drawings and as described herein.

B. All hardware, software and laptop approved by required to interface the HVAC subsystem communications network with the Facility Building Automation System shall be included. All of the existing XBS graphics must be updated and/or new picture graphics added if necessary.

C. A Heating, Ventilating and Air Conditioning (HVAC) subsystem, consisting of Microcomputer based control processors (CP's), interfaced directly with sensors, actuators, and environmental delivery systems (i.e. HVAC units, pumps, electrical distribution systems, etc.). Specific hardware, control sequence and software requirements for these functions are as detailed in subsequent sections of these specifications and on the drawings.

D. Temperature control system to be DDC with electronic sensors and electronic actuation of mechanical equipment room (MER) valves and dampers, and electronic actuation of terminal equipment valves and actuators as specified. Pneumatic actuation will be allowed if it is necessary to meet the system close-off requirements on larger valves and dampers.

E. Work described in this section shall be installed, wired, circuit tested, and calibrated by factory-certified technicians qualified for this work and in the regular employment of the temperature control system manufacturer. Supervision, calibration, and checkout of the system shall be performed by the employees of the local factory-owned temperature control contracting field office. Supplier shall have an in-place support facility within 50 miles of the site with technical staff, spare parts inventory, and all necessary test and diagnostic equipment. The Building Automation System (BAS) shall use a client server architecture based around a modular PC network, utilizing industry standard operating systems, networks, and protocols.

1.2 PRODUCTS FURNISHED BUT NOT INSTALLED UNDER THIS SECTION

A. Hydronic Piping: Installation of control valves, flow switches, temperature sensor wells, gage taps, and flow meters.

B. Steam and Steam Condensate Piping: Installation of control valves, flow switches, temperature sensor wells, gage taps, and flow meters.

1.3 RELATED SECTIONS

A. Sequence of Operation.

B. Equipment Wiring Systems.

1.4 REFERENCES

A. ASHRAE 85 – Automatic Control Terminology for Heating, Ventilating, and Air Conditioning.

B. ASME MC85.1 – Terminology for Automatic Control.

C. NEMA EMC1 – Energy Management System Definitions.

D. All work, materials, and equipment shall comply with the rules and regulations of all codes and ordinances of the local, state, and federal authorities. Such codes, when more restrictive, shall take precedence over these plans and specifications. As a minimum, the installation shall comply with the current editions in effect 90 days prior to receipt of bids of the following codes:

1. National Electric Code (NEC)

2. Uniform Building Code (UBC)

1.5 DEFINITIONS

A. Ensure Terminology in submittals conforms to ASHRAE 85 and NEMA EMC1.

1.6 SYSTEM DESCRIPTION

A. Automatic temperature monitoring and control system using field programmable microprocessor based units with communications to Building Automation System.

B. Direct Digital Control of air handling units, heat exchangers, terminal units, fan coil units, and reheat coils.

C. Electric actuators should be utilized on all damper motors and valve actuators.

D. Arrange controllers and make provision for connection to the Building Automation System. Furnish and install required hardware and software to interface the new input/output points with the BAS. The Building Manager operator interface software applications (graphic generation, alarm management, trending, historical archiving, and event programs) shall be utilized to create displays to present system data to the control room operators. Software drivers shall be installed to meet the control interface requirements of this project.

1.8 QUALITY ASSURANCE

A. Bids by wholesalers, contractors, franchised dealers or any firm whose principal business is not that of manufacturing and installing automatic temperature control systems shall not be acceptable.

B. The system shall be installed by competent mechanics, regularly employed by the Control manufacturer with experience of not less than one year in the proper operation of the system installed, including debugging and calibration. Manufacturer shall have an in-place support facility within fifty (50) miles of the site with technical staff, spare parts inventory and all necessary test and diagnostic equipment.

C. All materials and equipment shall be standard products of the Control Manufacturer routinely installed in similar projects, but not custom designed for this project. Systems and components shall have been tested and proven reliability for a period of not less than one year.

D. The system shall be modular, permitting expansion by adding hardware and software without changes in communication or processing equipment.

E. Single source responsibility by the system supplier shall be for the complete installation and proper operation of the temperature control system and shall include debugging and proper calibration of each component.

F. All electronic equipment shall conform to the requirements of FCC regulation, Part 15, Class A, governing radio frequency electromagnetic interference and be so labeled.

G. The complete installation shall be in strict accordance to the national and local electrical codes and the electrical section of these specifications. All devices designed for or used in line voltage applications shall be UL listed.

1.9 COORDINATION

A. Coordinate work under the provisions of Division 1.

B. Ensure the installation of components is complimentary to installation of similar components of other systems.

C. Coordinate installation of system components with installation of mechanical systems equipment such as air handling units, air terminal units, domestic water softeners, domestic water heaters and heat exchangers.

D. Ensure system is completed and commissioned.

1.10 WARRANTY

A. Provide two year warranty under the provisions of Division 1.

B. The control manufacturer shall guarantee the system installed under this section of the specification to be free from defects in workmanship and material under normal use for a period of one year after acceptance by the Company's Representative. Any defects in workmanship or material during this time shall be corrected by the control manufacturer at no charge to the owner.

C. Local warranty service shall be available within fifty (50) miles of the project. Warranty service shall be accomplished by qualified employees of the temperature control manufacturer. The manufacturer shall have a quality history of at least five (5) years in the project area.

D. Temperature control service by independent contractors, distributors, and franchised installers is not acceptable.

E. Warranty shall include the following:

1. Replacing, repairing, and/or adjusting defective parts and components as required to maintain acceptable system operation.

2. Technical assistance to troubleshoot malfunctioning equipment or systems.

F. All work shall have a single warranty date, even when the Owner has received beneficial use due to an early system start-up. If the work specified is split into multiple contracts or a multi-phase contract, then each contract or phase shall have a separate warranty start date and period.

G. At the end of the final start-up, testing, and commissioning phase, if equipment and systems are operating satisfactorily to the Engineer, the Engineer shall sign

certificates certifying that the control system's operation has been tested and accepted in accordance with the terms of this specification. The date of acceptance shall be the start of warranty.

1.11 PROTECTION OF SOFTWARE RIGHTS

A. Prior to the delivery of software, the Owner and the party providing the software will enter into a software license agreement with the provisions for the following.

1. Limiting use of software to equipment provided under these specifications.

2. Limiting copying.

3. Preserving confidentiality.

4. Prohibiting transfer to a third party.

5. Provide manufacturer's technical support.

1.12 ACCEPTABLE MANUFACTURERS

A. Base bid: Owner Approved Controls contractor who is able to meet the intent of specification known contractors ACS.

PART 2 – DIGITAL PRODUCTS

2.1 GENERAL

A. The direct digital control system shall be a modular system of Control processors (CP's) selected and designed to provide the function specified. Each component shall comply with the respective component specifications.

B. The control system shall be engineered and equipment selected by the ontrol manufacturer as required to meet the performance requirements of the specifications.

2.2 CONTROL PROCESSORS

A. General. Provide an adequate number of 16-bit microprocessor control processors to achieve the performance specified in the Part 1 Article on "System Performance" and where shown on the drawings. Each of these panels shall meet the following requirements.

1. The BAS shall be composed of one or more independent, standalone, microprocessor-based building controllers to manage the global strategies described in the System Software section.

2. The building controller shall be programmable and have sufficient memory to support its operating system, database, and application requirements.

3. As a back-up, store DDC application programs and data files on non-volatile EEPROM or Flash memory to allow simple and reliable changes.

4. Data shall be shared between networked building controllers using a peer-to-peer communication mechanism at a speed of 78k baud minimum.

5. The operating system of the building controller shall manage the input and output communication signals to allow distributed controllers to share real and virtual object information for integration and interoperation with other devices on the network.

6. Controllers that perform scheduling shall have a 30-day, battery-backed, real-time clock.

7. Provide controller-based trending permitting historical values to be stored in the controller. Both time-based and value-hysteresis-based trending shall be supported.

8. The building controller shall continually check the status of its processor and memory circuits. If an abnormal operation is detected, the controller shall:

    a. Assume a predetermined failure mode, and

    b. Generate an alarm notification.

9. Two basic CP types may be installed: modular or fixed I/O. Both CP types shall be BacNET compliant.

    a. The first of these shall provide a modular hardware design that allows for optimum adaptation of the I/O mix to the plant to be controlled. The modular hardware design shall allow for installation of distributed I/O modules remote from the CP.

    b. The second type shall have a fixed input and output hardware configuration for use with small applications or to provide control for distributed I/O modules.

B. Environment: Controller hardware shall be suitable for the anticipated ambient conditions. Controllers used outdoors or in wet ambient conditions shall be mounted within waterproof enclosures and shall be rated for ambient temperature operation at –40 degrees C to +65 degrees C (-40 degrees F to +150 degrees F) and ambient humidity of 5 to 93 percent RH non-condensing. Controllers used in conditioned space shall be mounted in dust-proof enclosures and shall be rated for ambient temperature operation at 0 degree C to +50 degrees C (32 degrees F to +122 degrees F) and humidity of 5 to 93 percent RH noncondensing.

C. Serviceability: Provide CPU diagnostic LEDs for normal, system error, transmit, receive, ground loop, BacNET service, and communications bus transmit and receive. Provide power supply module diagnostic LEDs for power supply normal, watchdog, and battery. All wiring connections shall be made to field-removable, modular terminal strips or to a termination card connected by a ribbon cable.

D. Memory: The building controller shall maintain all BIOS and programming information in the event of a power loss for at least 30 days. Battery-backed systems shall monitor battery status under load and, if an abnormal condition is detected, the controller shall generate an alarm notification.

E. Immunity to power and noise: Controller shall be able to operate at 90 percent to 110 percent of nominal voltage rating and shall perform an orderly shutdown below 80 percent nominal voltage. Operation shall be protected against electrical noise of 5 to 120 Hz and from keyed radios up to 5 W at 3 ft.

2.3 UNITARY CONTROLLERS

A. General: Unitary Controllers (UC's) shall be standalone, EEPROM-based, configured to perform the sequences specified, and I/O selected for the application. All Unitary Controllers DDC controllers (UC’s) shall be BacNET-approved products and shall support the BacNET Functional Profile for the given application. UC’s shall be tested and listed under UL916 for computing devices. UC enclosures shall be flame retardant, compact plastic conforming to UL94-V5 for plenum mounting or plated steel. UC's shall be CE approved and meet FCC Part 15 class B requirements. UC’s shall be configured for DIN rail mounting, using industry-standard clip-on adapters, or for direct panel mounting. Each UC shall be capable of standalone operation and shall continue to provide control functions without being connected to the network. Each UC will contain sufficient I/O capacity to control the target system.

B. Environment: The hardware shall be suitable for the anticipated ambient conditions.

1. Controllers used outdoors or in wet ambient conditions shall be mounted within waterproof enclosures and shall be rated for ambient temperature

operation at -40 degrees C to +65 degrees C (-40 degrees F to +150 degrees F) and ambient humidity of 5 to 95 percent RH noncondensing.

2. Controllers used in conditioned space shall be mounted in dust-proof enclosures and shall be rated for ambient temperature operation at 0 degree C to +50 degrees C (32 degrees F to +122 degrees F) and humidity of 5 to 95 percent RH noncondensing.

C. Serviceability: Each UC shall be provided with face-mounted LED type annunciation to continually display its operational mode—power, normal, or in an alarm state. As an alternative to the face-mounted integral LED, the control contractor shall provide relay-driven pilot lights mounted at the UC location, which shall provide the specified annunciation. UC's shall be configured for DIN rail mounting, using industry-standard clip-on adapters, or for direct panel mounting. Each controller shall be designed with on-board jacks for quick commissioning and troubleshooting with a portable programming tool.

D. Immunity to power and noise: Controllers shall be able to operate at 90 percent to 110 percent of nominal voltage rating and shall perform an orderly shutdown below 80 percent. Operation shall be protected against electrical noise of 5-120 Hz and from keyed radios up to 5 W at 3 ft.

2.4 DATA COMMUNICATIONS

A. The design of the BAS communications network consists of three layers. The PC workstation layer shall be based on standard LAN protocols for TCP/IP communications over Ethernet and token Ring. The second layer shall consist of CP's and UC Network Management Devices interconnected via a Primary peer-to-peer communication network. UC's shall be connected together on the third layer via Secondary peer-to-peer network managed by CP's or UC network management devices to provide data concentration and parallel processing for Unitary DDC Controllers such that system expansion does not noticeably affect system response. Zone network shall utilize BacNET communications technology.

1 All communications shall be via twisted pairs wires, shielded where required.

2. DDC microprocessor failures shall not cause loss of communications of the remainder of any network.

3. All networks shall be peer-to-peer supporting sensor sharing, global application programs and bus to bus communications in a true peer-to-peer token passing manner.

4. For reliability, maintainability, and performance communications busses shall be extendible to 4000 feet with out active hubs, links or repeater.

5. Error detection, correction and retransmission to guarantee data integrity.

B. UC Network: UC's shall reside directly on a peer-to-peer open protocol BacNET communications(or equal) bus using a minimum transmission speed of 76K baud. This network shall be supported by a twisted pair cable utilizing T-Taps, star and mixed topologies on the same network. The Free Topology Transceiver (FTT) network shall not be polarity sensitive. Network media shall be Level IV, 22AWG, twisted pair wire and must conform to UL Category 4 for high speed networks. Cable shall be supplied in plenum and non-plenum rated versions. Network length shall not exceed 1640 ft without the addition of BacNET repeater achieving an additional length of 3280ft. For lengths in excess of 3280ft a daisy chain wiring scheme can be employed and using a repeater this length can be extended to 10,000ft. Lengths in excess of 10,000ft will not be allowed. Repeater Bus topologies shall include bus segments of 60 nodes unless routers are utilized. Systems communicating at slower speeds shall not exceed 30 nodes per segment to insure adequate global data and alarm response times.

2.5 INPUT AND OUTPUT INTERFACE

A. Hardwired inputs and outputs may tie into the system through general purpose, custom application, or unitary controllers.

B. All input points and output points shall be protected such that shorting of the point to itself, to another point, or to ground will cause no damage to the controller. All input and output points shall be protected from voltage up to 24 V of any duration, such that contact with this voltage will cause no damage to the controller. Inputs and outputs shall be arranged on interchangeable modules or circuit boards to allow the replacement of a damaged module or board without replacing the entire controller.

C. Digital inputs shall allow the monitoring of on and off signals from remote devices. The digital inputs shall provide a wetting current of at least 12 mA to be compatible with commonly available control devices, and shall be protected against the effects of contact bounce and noise. Digital inputs shall sense "dry contact" closure without external power (other than that provided by the controller) being applied.

D. Totalizer input points: This type of point shall conform to all requirements of digital input points, and also accept up to 15 pulses per second for pulse accumulation.

E. Analog inputs for CPs shall be minimum 12-bit resolution and allow the monitoring of low-voltage (0 to 10 VDC), current (0 to 20 mA), negative

temperature coefficient (NTC), and resistance to detector (RTD). Analog inputs shall be compatible with and field-configurable to commonly available sensing devices. To prevent thermal loading, RTDs and thermistors shall be scanned rather than have continuous power applied.

F. Inputs shall be electrically isolated from their associated field points.

G. Digital outputs shall provide for on and off operation, or a pulsed low-voltage signal for pulse width modulation control. Outputs shall be selectable for either normally open or normally closed operation.

H. Analog outputs shall be minimum 8-bit resolution and provide a modulating signal for the control of end devices. Outputs shall provide either a 0 to 10 VDC or a 4 to 20 mA signal as required to provide proper control of the output device. Analog outputs on general purpose or custom application controllers shall have status lights and a two-position (Auto and Manual) switch and manually adjustable potentiometer with feedback for manual operation. Analog outputs shall not exhibit a drift of greater than 0.4 percent of range per year.

I. Tri-State outputs: Provide tri-state outputs (two coordinated digital outputs) for control of three-point floating-type electronic actuators without feedback. Use of three-point floating devices shall be limited to zone control and terminal unit control applications (VAV terminal units, duct-mounted heating coils, zone dampers, radiation). Control algorithms shall run the zone actuator to one end of its stroke every 24 hours for verification of operator tracking.

2.6 CP SOFTWARE

A. Furnish the following application software for building control and energy management. All software applications shall reside and operate in the system controllers. Editing of applications shall occur at the operator workstation.

B. Scheduling: Provide the capability to schedule each object or group of objects in the controller system. Controllers shall have a minimum of 20 schedules. Each schedule shall consist of the following:

1. Daily schedule: Provide daily schedules that are the basic building blocks for any of the following time schedules. Using daily schedules, user shall enter the switching times with the desired setpoints and switching conditions for the data-points. When preparing a daily schedule and assigning the name, there is initially no specific relationship to a particular day in the week. The modular structure of the time schedule shall make it possible for the user to establish various different daily schedules, keep them in a library, and include them in the weekly schedule. The user shall be free to extend the list of daily schedules to meet his/her special requirements. The repeated use of the same daily schedule shall also be

possible (for example, the same daily schedule can apply from Monday to Friday in the weekly schedule). Changes in a daily schedule shall be immediately effective in the weekly and annual schedules, as well as in the special day list.

2. Weekly schedule: Provide a separate weekly schedule that shall be generated for each time schedule. The weekly schedule defines which daily schedule is to be used for which weekday. A daily schedule is assigned to each day of the week (Monday to Sunday). It shall also be possible to assign the same daily schedule to several weekdays. The weekly schedule, as defined, shall automatically be copied for each week in the annual schedule. If a change is made to a weekday in a weekly schedule, this change shall affect the weekday in every week of the year. If a daily schedule is entered directly in the annual schedule, this daily schedule shall have priority over the daily schedule from the weekly schedule. The definition of a weekly schedule forms the basis of the annual schedule.

3. Annual schedule: Provide an annual schedule that is structured like a calendar and consists of successive weekly schedules. It provides an overview of which daily schedules are valid on which calendar days. If the daily schedule in a weekly schedule does not apply on a particular calendar date, another daily schedule can be entered for it directly in the annual schedule. The annual schedule starts on the current day. Each day, the time frame shifts one day. Days added at the end shall automatically be assigned the daily schedule from the weekly schedule. This ensures that every day is assigned a daily schedule. Entries in the annual schedule shall therefore be made only if a daily schedule differing from the one selected is to be used. An undefined daily schedule to be inserted in the annual schedule can be defined in the daily schedule.

4. Holiday schedule: Provide one holiday day list that shall exist per time schedule. The list shall make a number of holidays and special days available to which a daily schedule can be assigned. This daily schedule will then apply to this holiday or special day every year. The date of floating holidays shall be calculated automatically by the controller. If no daily schedule is entered on certain holidays, the special day list is not taken into account on this day. Provide capability for 24 holidays and special days.

C. Digital alarms: Each digital object shall be set to alarm based on the operator-specified state. Provide the capability to automatically and manually disable alarming.

D. Analog alarms: Each analog object shall have two maximum limits (limit max 1) and limit max two 2), and two minimum limits (limit min 1) and (limit min 2).

E. Totalizer alarms: Each totalizer object shall be set to alarm based on a pulse input signal interval that, if exceeded, triggers an alarm signal. The alarm signal text shall be permanently programmed and needs no input from the user.

F. System alarms: Operating errors that occur in a control unit or during communication with other controllers shall be recognized and displayed by the computer module. These alarm signals can relate, for example, to a defective module, the need to change the buffer battery (data protection), or the presence of one digital output module too many (maximum 10). These alarm signal texts are preprogrammed. They are always critical alarms.

G. Alarm reporting: The operator shall be able to determine the action to take in the event of an alarm. Alarms shall be routed to the appropriate workstations based on time and other conditions. An alarm shall be able to start programs, print, be logged in the event log, generate custom messages, and display graphics.

H. Remote communication: The system shall have the ability to dial out in the event of an alarm. The system shall incorporate standard modem units so that modems can be connected for communications via public telephone network or via TCP/IP networks. The controller shall allow direct connection of analog modem, ISDN terminal adapter, or TCP/IP modem with data transmission rates of up to 38.4 Kbaud. In addition, wireless data communication via GSM 900 MHz network shall be supported

I. Demand limiting:

1. The demand-limiting program shall monitor building power consumption from signals generated by a pulse generator (provided by others) mounted at the building power meter or from a watt transducer or current transformer attached to the building feeder lines.

2. The demand-limiting program shall predict the probable power demand such that action can be taken to prevent exceeding the demand limit. When demand prediction exceeds demand limit, action will be taken to reduce loads in a predetermined manner. When demand prediction indicates the demand limit will not be exceeded, action will be taken to restore loads in a predetermined manner.

3. Demand reduction shall be accomplished by the following means:

a. Reset air-handling unit supply temperature set point up by 1 degree C (2 degrees F).

b. Reset space temperature set points up by 1 degree C (2 degrees F).

c. De-energize equipment based upon priority.

J. Demand-limiting parameters, frequency of calculations, time intervals, and other relevant variables shall be based on the means by which the local power company computes demand charges.

K. Provide demand-limiting prediction and control for any individual meter monitored by the system or for the total of any combination of meters.

L. Provide the means for an operator to make the following changes on-line:

1. Addition and deletion of loads controlled.

2. Changes in demand intervals.

3. Changes in demand limit for meter(s).

4. Maximum shutoff time for equipment.

5. Minimum shutoff time for equipment.

6. Select rotational or sequential shedding and restoring.

7. Shed and restore priority.

M. Provide the following information and reports, to be available on an hourly, daily, and monthly basis:

a. Total electric consumption

b. Peak demand

c. Date and time of peak demand

d. Daily peak demand

N. Sequencing: Provide application software based upon the sequences of operation specified to properly sequence chillers, boilers, and pumps.

O. EPID control: An EPID (enhanced proportional-integral-derivative) algorithm with additional features shall be supplied. The algorithm shall calculate a time-varying analog value that is used to position an output or stage a series of outputs. The enhanced features shall include a built-in start-up ramp, direct-reverse action selection, integral recalculation to prevent windup below minimum and above maximum, and an auxiliary input for limit applications and integral reset. The controlled variable, set point, and PID gains shall be user-selectable.

P. Staggered start: This application shall prevent all controlled equipment from simultaneously restarting after a power outage. The order in which equipment (or groups of equipment) is started, along with the time delay between starts, shall be user-selectable.

Q. Energy calculations:

1. Provide software to allow instantaneous power (e.g., kW) or flow rates (e.g. gpm) to be accumulated and converted to energy usage data.

2. Provide an algorithm that calculates a sliding window average (e.g., rolling average). The algorithm shall be flexible to allow window intervals to be user-specified (e.g., 15 minutes, 30 minutes, and 60 minutes).

3. Provide an algorithm that calculates a fixed window average. A digital input signal will define the start of the window period (e.g., signal from utility meter) to synchronize the fixed window average with that used by the utility.

R. Anti-short cycling: All digital output objects shall be protected from short cycling. This feature shall allow minimum on time and off time to be selected.

S. On and off control with differential: Provide an algorithm that allows a digital output to be cycled based on a controlled variable and set point. The algorithm shall be direct acting or reverse acting and incorporate an adjustable differential.

T. Duty cycle: Provide software to switch HVAC systems on and off at variable intervals to save energy while maintaining room conditions. The program shall have adjustable internal parameters for room comfort range, maximum off times, minimum off times, and motor cycle times.

U. Economizer: Provide software that determines the most economical system operation for full and partial air conditioning systems. For a full air conditioning plant, it calculates the control signal (Y output) for energy recovery on the basis of actual outdoor air enthalpy, return air enthalpy, and demand. In partial air conditioning systems, this control icon shall be used for heat recovery with temperature comparison. The economizer program shall make decisions based on the following information: Is the system a full or partial air conditioning system? A full system has temperature and humidity control. A partial system has temperature control only. Is there mixed air damper operation or heat and humidity recovery using a thermal wheel? Which has the higher energy cost: heating or cooling?

V. Enthalpy: Provide an algorithm that calculates enthalpy and humidity ratio based on temperature and relative humidity.

X. Night purge: Provide a program that outputs an on and off value to start and stop ventilation and air conditioning systems to precondition rooms when cold outdoor air is available during non-working hours (usually, nighttime). To switch on the air conditioning as late as possible, this function shall permit room temperature to drop below room temperature setpoint during night cooling. Night purge shall achieve this action by resetting the room temperature setpoint downward. Minimum outdoor air temperature shall be limited to prevent damage from excessively cold outdoor air.

X. Optimum start and stop: Provide a software program that calculates optimized values for starting and stopping the heating plant. The optimized start-stop function shall consider the residual heat in a building to avoid unnecessary heating operation. Required room conditions are met at all times. The optimum start and stop program calculates required flow temperature with an integrated heating curve. Two techniques shall be available: optimization without room sensor or optimization with room sensor. Optimization without room sensor uses outdoor air temperature to determine optimum start (the preheat point). Optimization with room sensor uses room control and needs a time constant (time program) and dead time to calculate the preheat point.

Y. Zero energy band: Provide a software program that determines setpoints to maintain a predetermined comfort band divided into heating, cooling, and zero energy bands. ZEB subdivides a predetermined comfort band into: Heating band Zero energy band Cooling band. The zero energy band represents a temperature range in which the room temperature may vary without a need for heating or cooling.

Z. Run-time totalization: Provide software to totalize run times for all digital input objects. A high run-time alarm shall be assigned, if required, by the operator.

2.7 UC SOFTWARE

A. UC Software shall be configured to meet the requirements of the "Sequence of Operation" specified and shall be field configurable. UC software shall support full PID control, and shall utilize separate PID gains for heating and cooling. Where UC space sensors are provided with temperature setpoint knobs, UC's shall be provided with unique software setpoint limits. Each UC shall have continuously running hardware diagnostics to detect malfunctions of the flow sensor, the temperature sensor, the remote setpoint sensor, and the A to D converter.

B. UC's shall have configured air flow calibration software to assist the test and balance (T&B) contractor in final calibrations. Using the UC contractors calibration tool, the T&B contractor shall be provided with a display allowing a simple command entry to place the UC in zero, minimum, and maximum CFM

control modes. At each mode, a display field shall be provided for the T&B contractor to enter the actual measured value in CFM. Upon completion of entering the three values, the UC shall automatically recalibrate based upon the actual values.

PART 3 - PRODUCTS

3.1 MOTORIZED DAMPERS

A. Motorized control dampers, unless otherwise specified elsewhere, shall be as follows:

1. Control dampers shall be parallel or opposed blade type as below or as scheduled on drawings.

   a. Outdoor, return air mixing dampers and face and bypass (F&BP) dampers shall be parallel blade, arranged to direct air-streams toward each other.

   b. Other modulating dampers shall be opposed blade type.

   c. Two-position shutoff dampers may be parallel or opposed blade type with blade and side seals.

2. Damper frames shall be 16 gauge galvanized steel channel or 1/8” extruded aluminum with reinforced corner bracing.

3. Damper blades shall not exceed 8” in width or 48” in length. Blades are to be suitable for medium-velocity performance (2,000 – 3,000 fpm). Blades shall be not less than 16 gauge.

4. Damper shaft bearings shall be as recommended by manufacturer for application, synthetic, impregnated sintered bronze or stainless steel.

5. All blade edges and top and bottom of the frame shall be provided with vinyl or neoprene seals. Side seals shall be spring-loaded aluminum. The blade seals shall provide for a maximum leakage rate of 10 cfm per sq. ft. at 4” w.c. differential pressure.

6. Individual damper sections shall not be larger than 48” x 60”. Provide a minimum of one damper actuator per section.

7. Modulating dampers shall provide a linear flow characteristic where possible.

8. Dampers shall have capability for internal and external linkages. Dampers over 48” in applications where sectioning is not applicable shall be supplied with a jackshaft to provide sufficient force throughout the intended operating range.

9. Dampers shall be AMCA Certified Performance in accordance with AMCA Standard 511.

3.2 CONTROL VALVES

A. Control valves shall be two-way or three-way type for two-position or modulating service as shown.

B. Close-off (differential) pressure rating: Valve actuator and trim shall be furnished to provide the following minimum close-off pressure ratings:

1. Water valves:

a. Two-way: 150 percent of total system pressure but not less than 45 psi.

b. Three-way: 300 percent of pressure differential between ports A and B at design flow or 100 percent of total system (pump) head.

2. Steam valves: 150 percent of operating (inlet) pressure.

C. Water valves:

1. Body and trim style and materials shall be per manufacturer’s recommendations for design conditions and service shown, with equal percentage ports for modulating service.

2. Sizing criteria:

a. Two-position service: Line size, unless otherwise shown.

b. Two-way modulating service: Pressure drop shall be equal to twice the pressure drop through heat exchanger (load), 50 percent of the pressure difference between supply and return mains, or 5 psi, whichever is greater.

c. Three-way modulating service: Pressure drop equal to twice the pressure drop through the coil exchanger (load), 5 psi maximum.

d. Valves 1/2” through 2” shall be bronze body or cast brass ANSI Class 150, spring-loaded, O-ring seal, EPDM packing, quick opening for two-

position service. Two-way valves to have replaceable composition disc, or stainless steel ball.

e. 2 1/2” valves and larger shall be cast iron ANSI Class 125 with guided plug and EDPM O-ring or Teflon packing, unless otherwise shown.

3. Water valves shall fail normally open or closed as scheduled on plans, or as follows:

a. Water zone valves—normally opened preferred.

b. Heating coils in air handlers—normally open.

c. Chilled water control valves—normally closed.

d. Other applications—as scheduled or as required by sequences of operation.

D. Steam valves:

1. Body and trim materials shall be per manufacturer’s recommendations for design conditions and service. Linear ports for modulating service.

2. Sizing criteria:

a. Two-position service: pressure drop 10 percent to 20 percent of inlet psig.

b. Modulating service: 15 psig or less; pressure drop 80 percent of inlet psig.

c. Modulating service: 16 to 50 psig; pressure drop 50 percent of inlet psig.

d. Modulating service: over 50 psig; pressure drop as scheduled on plans.

3.3 ELECTRIC VALVE AND DAMPER ACTUATORS

A. The actuator shall have mechanical or electronic stall protection to prevent damage to the actuator through the rotation of the actuator.

B. Where shown, for power-failure and safety applications, an internal mechanical spring-return mechanism shall be built into the actuator housing. Alternatively, an un-interruptible power supply (UPS) may be provided

C. All rotary spring-return actuators shall be capable of clockwise or counter-clockwise spring-return operation. Linear actuators shall spring-return to the retracted position.

D. Proportional actuators shall accept a 0 to 10 VDC or 0 to 20 mA control signal and provide a 2 to 10 VDC or 4 to 20 mA operating range.

E. All 24 VAC/VDC actuators shall operate on Class 2 wiring.

F. All non-spring-return actuators shall have an external manual gear release to allow manual positioning of the damper when the actuator is not powered. Spring-return actuators with more than 60 in-lb. torque capacity shall have a manual crank for this purpose.

G. All modulating actuators shall have an external, built-in switch to allow the reversing of rotation direction.

H. Actuators shall be provided with a raceway fitting and a minimum 1m electrical cable and shall be pre-wired to eliminate the necessity of opening the actuator housing to make electrical connections.

I. Actuators shall be UL Standard 873 Listed as meeting correct safety requirements and recognized industry standards.

J. Actuator housings shall be NEMA 2 and plenum rated.

K. Actuators shall be designed for a minimum of 60,000 full-stroke cycles at the actuator's rated torque and 1.5 million repositions.

3.4 TEMPERATURE SENSORS

A. Passive temperature sensors with NTC 20K ohm, Balco500 and PT1000 elements shall be available for different applications.

1. Outdoor temperature sensors (also combined with humidity sensors) with extra covers for protection and shielding the sun. Prewired and terminal block versions shall be available. Their temperature range shall be –40 to +60°C.

2. Earth temperature sensors for greenhouse applications. These prewired NTC 20 sensor shall be rated to IP65. Their temperature range shall be –50 to +90°C.

3. Room temperature sensors (also combined with setpoint adjustment and fan/presence switches). These shall be available with NTC 20, PT1000

and Balco500 elements in an attractive, appealing housing, with terminal blocks for wiring. Models shall also be available with LEDs. Their temperature range shall be –20 to +50°C.

4. Air duct temperature sensors. Prewired and terminal block versions shall be available to mount in and outside the duct. Their temperature range shall be –40 to +120°C.

5. Strap-on temperature sensors. These shall be used measure the temperature in a water pipe. Prewired and terminal block versions shall be available and shall be mounted on the pipe with a clamp. Their temperature range shall be –50 to 110°C.

6. Immersion temperature sensors. These shall be used to measure the temperature in a water pipe. Prewired and terminal block versions shall be available and shall be mounted in the pipe with a well. Lengths from 95 to 300 mm shall be available. Material shall be copper, brass or stainless steel depending on type. Their temperature range shall be –50 to +130°C.

7. Fast temperature sensors. These shall be used with domestic hot water applications in district heat stations and shall detect fast temperature changes. These shall be prewired stainless steel sensors and be available with a NTC 20 element. They shall be mounted directly into the pipe. Sensor lengths shall be 75, 220 and 300 mm. The length shall be adjustable to pipe diameters.

B. A single PT 1000 sensor over a length of 3.6m shall be used for sensing the average temperature in large air ducts with. Sensor holders shall be included for installation.

C. Stainless steel temperature sensors shall be available with PT 100 and PT 1000 elements and stainless steel temperature transmitters. They shall feature a 2-wire-system, 4-20 mA output, 12-36 Vdc supply voltage, and shall meet protection class IP 65.

3.5 CURRENT SENSING SWITCHES

A. Current sensing switch shall be self-powered with solid-state circuitry and a dry contact output. Current sensing switches shall consist of a solid state current sensing circuit, adjustable trip point, solid state switch, SPDT relay and an LED indicating the on or off status. A conductor of the load shall be passed through the window of the device. It shall accept overcurrent up to twice its trip into range.

PART 4 - EXECUTION

4.1 GENERAL

A. All installation required for a complete operating control system as described herein, unless otherwise noted, shall be provided as work of this Section. The system shall include all central and remote hardware, software, interconnecting wiring and conduit as required for a fully operational system, and shall be installed in accordance with local and national codes.

B. Installation of all conduit, wire, sleeves, outlet boxes, insulating bushings, system cabinets, terminal boxes, pull boxes, and junction boxes, shall be according to appropriate requirements and applicable sections of the current edition of the applicable codes for signaling systems.

C. Installation of sensor wiring in finished areas shall be concealed.

D. Unless otherwise shown on the drawings, all wiring for work described herein or required for the proper functioning of the automatic temperature control sequences shall be provided as work of this division.

4.2 CONTROL WIRING

A. General:

1. All control and interlock wiring shall comply with national and local electrical codes and Division 16 of this specification. Where the requirements of this section differ with those in Division 16, the requirements of this section shall take precedence.

2. All NEC Class 1 (line voltage) wiring shall be UL Listed in approved raceway per NEC and Division 16 requirements.

3. All low-voltage wiring shall meet NEC Class 2 requirements. (Low-voltage power circuits shall be sub-fused when required to meet the Class 2 current limit.)

4. Where NEC Class 2 (current limited) wires are in concealed and accessible locations, including ceiling return air plenums, approved cables not in the raceway may be used, provided that the cables are UL Listed for the intended application. For example, plenums shall be UL Listed specifically for that purpose.

5. Do not install Class 2 wiring in raceway containing Class 1 wiring. Boxes and panels containing high-voltage wiring and equipment may not be used for low-voltage wiring except for the purpose of interfacing the two (e.g., relays and transformers).

6. Do not install wiring in raceway containing tubing.

7. All wire-to-device connections shall be made at a terminal block or terminal strip. All wire-to-wire connections shall be made at a terminal block or wire nut at junction box.

8. All wiring within enclosures shall be neatly bundled and anchored to permit access and prevent restriction to devices and terminals.

9. Install plenum wiring in sleeves where it passes through walls and floors. Maintain fire rating at all penetrations.

10. Control and status relays are to be located in designated enclosures only. These enclosures include packaged equipment control panel enclosures, unless they also contain Class 1 starters.

11. Install insulated bushings on all raceway ends and openings to enclosures. Seal top end of all vertical raceways.

12. The contractor shall terminate all control and interlock wiring, and shall maintain updated wiring diagrams with terminations identified at the job site.

B. Temperature control wiring shall be jacketed cables installed with or without conduit as specified below or single conductors installed in conduit. Control wiring shall have minimum 300 volts for low voltage (up to 24V) wiring and 600 volts of line voltage (120V to 460V) wiring.

C. All line voltage control wiring, all low voltage control wiring which is exposed in the central plant, penthouse, and other similar spaces; all low voltage control wiring which is routed through concealed inaccessible locations and the main data communications loop shall be installed in conduit.

D. All low voltage control wiring which is routed through concealed accessible locations may be run without conduit provided that the wiring run without conduit is properly supported from the building structure on maximum 5 foot centers, smoke rated for plenum installation. Wiring shall not be supported from ceiling grid. Plenum cables shall be supported from or anchored to structural members. Cables shall not be supported by or anchored to ductwork, electrical raceways, piping, or ceiling suspension systems.

E. Line and low voltage control wiring shall not be installed in the same conduit and control wiring shall not be installed in the same conduit with power wiring.

4.3 PROGRAMMING

A. Provide sufficient internal memory for the specified sequences of operation and devices provided.

B. Point naming and point value: System point names and values shall be of sufficient size to allow flexibility in design, allowing easy operator interface without the use of a written point index or cryptic alphanumeric shorthand.

C. Software programming

1. Provide programming for the system and adhere to the sequences of operation provided. Imbed into the control program sufficient comment statements to clearly describe each section of the program.

D. Operator interface

1. Standard graphics. Provide graphics for BAS devices and locate on floor plans of the building. Point information on the graphic displays shall dynamically update. Show on each graphic all input and output points for the system. Show relevant calculated points if required by specifications.

2. The Contractor shall provide all labor necessary to install, initialize, start up, and troubleshoot all operator interface software and their functions as described in this section. This includes any operating system software, the operator interface database, and any third-party software installation and integration required for successful operation of the operator interface.

PART1: GENERAL

1.9 WORK INCLUDED

A. The existing Alerton Control System shall integrate to the Control System supplied with the Mechanical Equipment on this project using the protocols and network standards as defined by ANSI/ASHRAE Standard 135-2008, BACnet. In other words, all workstations and controllers, including unitary controllers, shall be native BACnet devices. No gateways shall be used for communication to controllers installed under this section. Gateways may be used for communication to existing systems or to systems installed under other sections.

B. Provide all necessary BACnet-compliant hardware and software to meet the system's functional specifications. Provide Protocol Implementation Conformance Statement (PIGS) for Windows-based control software and every controller in system, including unitary controllers.

C. Prepare individual hardware layouts, interconnection drawings, and software configuration from project design data.

D. Implement the detailed design for all analog and binary objects, system databases, graphic displays, logs, and management reports based on control descriptions, logic drawings, configuration data, and bid documents.

E. Design, provide, and install all equipment cabinets, panels, data communication network cables needed, and all associated hardware.

F. Provide and install all interconnecting cables between supplied cabinets, application controllers, and input/output devices.

1.10 SYSTEM DESCRIPTION

A. The existing Alerton System is a distributed logic control system complete with all software and hardware functions based on ANSI/ASHRAE Standard 135-2008, BACnet and achieved listing under the BACnet Testing Laboratories BACnet- Advanced Workstation Software (B-AWS). This system controls all mechanical equipment, including all unitary equipment such as VAV boxes, heat pumps, fan-coils, AC units, etc., and all air handlers, boilers, chillers, and any other listed equipment using native BACnet-compliant components.

B. The existing Alerton Operator's workstation software shall use Microsoft windows XP Professional, Microsoft Vista "Ultimate Enterprise" editions, or Microsoft Windows 7 as the computer operating system. The Energy Management and Control System (EMCS) application program shall be written to communicate specifically utilizing BACnet protocols. Software functions delivered on this project shall include password protection, scheduling (including optimum start), alarming, logging of historical data, full graphics including animation, after-hours billing program, demand limiting, and a full suite of field engineering tools including graphical programming and applications. Systems using operating systems other than that described above are strictly prohibited. All software required to program application specific controllers and all field level devices and controllers will be left with the owner. All software passwords required to program and make future changes to the system will also become the property of the owner. All software required to make any program changes anywhere in the system, along with scheduling and trending applications, will be left with the owner. All software passwords required to program and make future changes to schedules, trends and related program changes will also become the property of the owner. All software required for all field engineering tools including graphical programming and applications will be left with the owner. All software passwords required to program and make future changes to field engineering tools, including graphical programming and applications will be left with the owner.

C. The existing Alerton Building controllers shall include complete energy management software, including scheduling building control strategies with optimum start and logging routines. All energy management software and firmware shall be resident in field hardware and shall not be dependent on the operator's terminal. Operator's terminal software is to be used for access to field-based energy management functions only. Provide zone-by-zone direct digital logic control of space temperature, scheduling, runtime accumulation, equipment alarm reporting, and override timers for after-hours usage.

D. The existing Alerton Room sensors shall be provided with digital readout that allows the user to view room temperature, view outside air temperature, adjust the room setpoint within preset limits and set desired override time.

User shall also be able to start and stop unit from the digital sensor. Include all necessary wiring and firmware such that room sensor includes field service mode. Field service mode shall allow a technician to balance VAV zones and access any parameter in zone controller directly from the room sensor. Field service mode shall have the ability to be locked out.

E. The existing Alerton Application Controllers for every terminal unit (VAV, HP, UV, etc.) air handler, all central plant equipment, and any other piece of controlled equipment shall be fully programmable. Application controllers shall be mounted next to controlled equipment and communicate with building controller through BACnet LAN.

2.2 APPROVED MANUFACTURERS

Approved Control Manufacturers

A. Alerton

2.3 QUALITY ASSURANCE

4 The Building Automation System (BAS) system shall be designed, installed, commissioned, and serviced by manufacturer authorized and trained personnel. System provider shall have an in-place support facility within 2 hours response time of the site with technical staff, spare parts inventory, and necessary test and diagnostic equipment.

The contractor shall provide full-time, on-site, experienced project manager for this work, responsible for direct supervision of the design, installation, start-up and commissioning of the BAS system.

The Bidder shall be regularly engaged in the design, installation and maintenance of BAS systems and shall have demonstrated technical expertise and experience in the

design, installation and maintenance of BAS systems similar in size and complexity to this project. Bidders shall provide a list of at least 10 projects, similar in size and scope to this project completed within the past 3 years.

5 Materials and equipment shall be manufacturer's latest standard design that complies with the specification requirements.

6 All BAS peer-to-peer network controllers, central system controllers and local user displays shall be UL Listed under Standard UL 916, category PAZX.

7 All electronic equipment shall conform to the requirements of FCC Regulation, Part 15, Governing Radio Frequency Electromagnetic Interference and be so labeled.

8 Control system shall be engineered, programmed and supported completely by representative's local office that must be within **100 miles** of project site.

2.4 REFERENCE STANDARDS

6. The latest edition of the following standards and codes in effect and amended as of supplier's proposal date, and any applicable subsections thereof, shall govern design and selection of equipment and material supplied:

   a. American Society of Heating, Refrigerating and Air Conditioning Engineers (ASHRAE).

   b. ANSI/ASHRAE Standard 135-2008, BACnet.

   c. Uniform Building Code (UBC), including local amendments.

   d. UL 916 Underwriters Laboratories Standard for Energy Management Equipment. Canada and the US.

   e. National Electrical Code (NEC).

   f. FCC Part 15, Subpart J, Class A.

   g. EMC Directive 89/336/EEC (European CE Mark).

   h. UL-864 UUKL listing for Smoke Controls for any equipment used in smoke control sequences.

7. City, county, state, and federal regulations and codes in effect as of contract date.

8. Except as otherwise indicated, the system supplier shall secure and pay for all permits, inspections, and certifications required for his work, and arrange for necessary approvals by the governing authorities.

2.5 SUBMITTALS

A. Drawings

1. The system supplier shall submit engineered drawings, control sequence, and bill of materials for approval.

2. Drawings shall be submitted in the following standard sizes: 11" x 17" (ANSI B).

3. Eight complete sets (copies) of submittal drawings shall be provided.

4. Drawings shall be available on CD-ROM.

B. System Documentation

Include the following in submittal package:

1. System configuration diagrams in simplified block format.

2. All input/output object listings and an alarm point summary listing.

3. Electrical drawings that show all system internal and external connection points, terminal block layouts, and terminal identification.

4. Complete bill of materials, valve schedule and damper schedule.

5. Manufacturer's instructions and drawings for installation, maintenance, and operation of all purchased items.

6. Overall system operation and maintenance instructions-including preventive maintenance and troubleshooting instructions.

7. For all system elements-operator's workstation(s), building controller(s), application controllers, routers, and repeaters-provide BACnet Protocol Implementation Conformance Statements (PICS) as per ANSI/ASHRAE Standard 135-2001.

8. Provide complete description and documentation of any proprietary (non- BACnet) services and/or objects used in the system.

9. A list of all functions available and a sample of function block programming that shall be part of delivered system.

C. Project Management

1. The vendor shall provide a detailed project design and installation schedule with time markings and details for hardware items and software development phases. Schedule shall show all the target dates for transmission of project information and documents, and shall indicate timing and dates for system installation, debugging, and commissioning.

2.6 WARRANTY

A. Warranty shall cover all costs for parts, labor, associated travel, and expenses for a period of one year from completion of system acceptance.

B. Hardware and software personnel supporting this warranty agreement shall provide on-site or off-site service in a timely manner after failure notification to the vendor. The maximum acceptable response time to provide this service at the site shall be 48 hours, Monday through Friday and 72 hours on Saturday and Sunday.

C. This warranty shall apply equally to both hardware and software.

PART 2: PRODUCTS

2.1 OPERATOR'S WORKSTATION

A. The existing Alerton workstation interaction shall be a standard client/server relationship. Server shall be used to archive data and store system database. Clients shall access server for all archived data. Each client shall include flexibility to access graphics from server or local drive.

B. BACnet Conformance

1. Operator Work Station shall be approved by the BTL as meeting the BACnet Advanced Work Station requirements.

2. The operator's workstation shall comply with Annex J of the BACnet specification for IP connections. Must support remote connection to server using a thick client application. This device shall use Ethernet to connect

to the IP internetwork, while using the same Ethernet LAN for non-IP communications to other BACnet devices on the LAN. Must support interoperability on wide area networks (WANs) and campus area networks (CANs). Workstation shall support Foreign Device Registration to allow temporary workstation connection to IP network.

C. Displays

1. Operator's workstation shall display all data associated with project as called out on drawings and/or object type list supplied. Graphic files

shall be created using digital, full color photographs of system installation, AutoCAD or Visio drawing files of field installation drawings and wiring diagrams from as-built drawings. Operator's workstation shall display all data using three-dimensional graphic representations of all mechanical equipment. System shall be capable of displaying graphic file, text, and dynamic object data together on each display and shall include animation. Information shall be labeled with descriptors and shall be shown with the appropriate engineering units. All information on any display shall be dynamically updated without any action by the user. Workstation shall allow user to change all field-resident EMCS functions associated with the project, such as setpoints, weekly schedules, exception schedules, etc., from any screen, no matter if that screen shows all text or a complete graphic display. This shall be done without any reference to object addresses or other numeric/mnemonic indications.

2. All displays and programming shall be generated and customized by the local EMCS supplier and installer. Systems requiring factory development of graphics or programming of DDC logic are specifically prohibited.

D. Password Protection

1. Provide security system that prevents unauthorized use unless operator is logged on. Access shall be limited to operator's assigned functions when user is logged on. This includes displays as outlined above.

2. Each operator's terminal shall provide security for a minimum of 200 users. Each user shall have an individual User ID, User Name, and Password. Entries are alphanumeric characters only and are case sensitive (except for User ID). User ID shall be 0-8 characters, User Name shall be 0-29 characters, and Password shall be 4-8 characters long. Each system user shall be allowed individual assignment of only those control functions, menu items, and user specific system start display, as well restricted access to *discrete BACnet devices* to which that user requires access. All passwords, user names, and access assignments shall be adjustable online at the operator's terminal. Users should have the capability to be assigned to specific user type "groups" that can share the same access levels to speed setup. Users who are members of multiple "groups" shall have the ability to activate/deactivate membership to those groups while using the BAS (without logout). Users shall also have a set security level, which defines access to displays and individual objects the user may control. System shall include 10 separate and distinct security levels for assignment to users.

3. System shall include an Auto Logout Feature that shall automatically logout user when there has been no keyboard or mouse activity for a set period of time. Time period shall be adjustable by system administrator. Auto Logout may be enabled and disabled by system administrator. Operator terminal shall display message on screen that user is logged out after Auto Logout occurs.

4. The system shall permit the assignment of an effective date range, as well as an effective time of day, that the User IDs are permitted to authenticate.

E. Operator Activity Log

1. Operator Activity Log that tracks all operator changes and activities shall be included with system. System shall track what is changed in the system, who performed this change, date and time of system activity, and value of the change before and after operator activity. Operator shall be able to display all activity, sort the changes by user and also by operation. Operator shall be able to print the Operator Activity log display.

2. Log shall be gathered and archived to hard drive on operator's workstation as needed. Operator shall be able to export data for display and sorting in a spreadsheet.

3. Any displayed data that is changeable by the operator may be selected using the right mouse button and the operator activity log shall then be selectable on the screen. Selection of the operator activity log using this method shall show all operator changes of just that displayed data.

F. Scheduling

1. Operator's workstation shall show all information in easy-to-read daily format including calendar of this month and next. All schedules shall show actual ON/OFF times for day based on scheduling priority. Priority for scheduling shall be events, holidays and daily, with events being the highest.

2. Holiday and special event schedules shall display data in calendar format.

Operator shall be able to schedule holidays and special events directly from these calendars.

3. Operator shall be able to change all information for a given weekly or exception schedule if logged on with the appropriate security access.

4. System shall include a Schedule Wizard for set up of schedules. Wizard shall walk user through all steps necessary for schedule generation. Wizard shall have its own pull-down selection for startup or may be started by right-clicking on value displayed on graphic and then selecting Schedule.

5. Scheduling shall include optimum start based on outside air temperature, current heating/cooling setpoints, indoor temperature and history of previous starts. Each and every individual zone shall have optimum start time independently calculated based on all parameters listed. User shall input schedules to set time that occupied setpoint is to be attained. Optimum start feature shall calculate the startup time needed to match zone temperature to setpoint. User shall be able to set a limit for the maximum startup time allowed.

6. Any displayed data that is changeable by the operator may be selected using the right mouse button and the schedule shall then be selectable on the screen. Selection of the schedule using this method shall allow the viewing of the assigned schedule or launch the Schedule Wizard to allow the point to be scheduled.

G. Alarm Indication and Handling.

1. Operator's workstation shall provide audible, visual, printed, and email means of alarm indication. The alarm dialog box shall always become the top dialog box regardless of the application(s) currently running. Printout of alarms shall be sent to the assigned terminal and port. Alarm notification can be filtered based on the User ID's authorization level.

2. System shall provide log of alarm messages. Alarm log shall be archived to the hard disk of the system operator's terminal. Each entry shall include a description of the event-initiating object generating the alarm.

Description shall be an alarm message of at least 256 characters in length. Entry shall include time and date of alarm occurrence, time and date of object state return to normal, time and date of alarm acknowledgment, and identification of operator acknowledging alarm.

3. Alarm messages shall be in user-definable text (English or other specified language) and shall be delivered either to the operator's terminal, client or through remote communication using email (Authenticated SMTP supported).

4. System shall include an Alarm Wizard for set up of alarms. Wizard shall walk user through all steps necessary for alarm generation. Wizard shall have its own pull-down selection for startup or may be started by right- clicking on value displayed on graphic and then selecting alarm setup.

5. Any displayed data that is changeable by the operator may be selected using the right mouse button and the alarm shall then be selectable on the screen. Selection of the alarm using this method shall allow the viewing of the alarm history or launch the Alarm Wizard to allow the creation of a new alarm.

H. Trendlog Information

1. System server shall periodically gather historically recorded data stored in the building controllers and store the information in the system database. Stored records shall be appended with new sample data, allowing records to be accumulated. Systems that write over stored records shall not be allowed unless limited file size is specified. System database shall be capable of storing up to 50 million records before needing to archive data. Samples may be viewed at the operator's workstation. Operator shall be able to view all trended records, both stored and archived. All trendlog records shall be displayed in standard engineering units.

2. Software that is capable of graphing the trend logged object data shall be included. Software shall be capable of creating two-axis (X, Y) graphs that display up to 10 object types at the same time in different colors. Graphs shall show object values relative to time. Each trendlog shall support a custom scale setting for the graph view that is to be stored continuously. System shall be capable of trending on an interval determined by a polling rate, or change-of-value.

3. Operator shall be able to change Trendlog setup information. This includes the information to be logged as well as the interval at which it is to be logged. All input, output, and value object types in the system may be logged. All operations shall be password protected. Setup and viewing may be accessed directly from any and all graphics on which object is displayed.

4. System shall include a Trend Wizard for setup of logs. Wizard shall walk user through all necessary steps. Wizard shall have its own pull-down selection for startup, or may be started by right-clicking on value displayed on graphic, and then selecting Trendlogs from the displayed menu.

5. System shall be capable of using Microsoft SOL as the system database.

6. Any displayed data that is changeable by the operator may be selected using the right mouse button and the trendlog shall then be selectable on the screen. Selection of the trend log using this method shall allow the viewing of the trendlog view or launch the Trendlog wizard to allow the creation of a new trend.

I. Tenant Activity

1. System shall include program that monitors after-hours overrides by tenants, logs that data, and generates a bill based on usage and rate charged for each tenant space. Tenant Activity program shall be able to assign multiple zones, from a list of every zone connected to system, to a particular tenant. Every zone is monitored for after-hour override usage and that data logged in server. Operator may then generate a bill based on the usage for each tenant and the rate charged for any overtime use.

J. Reports

1. System server shall be capable of periodically producing reports of trendlogs, alarm history, tenant activities, device summary, energy logs, and override points. The frequency, content, and delivery are to be user adjustable.

2. All reports shall be capable of being delivered in multiple formats including text- and comma-separated value (CSV) files. The files can be printed, emailed, or saved to a folder, either on the server hard drive or on any network drive location.

K. Configuration/Setup

1. Provide means for operator to display and change system configuration. This shall include, but not be limited to, system time, day of the week, date of daylight savings set forward/set back, printer termination, port addresses, modem port and speed, etc. Items shall be modified using understandable terminology with simple mouse/cursor key movements.

L. Field Engineering Tools

1. Operator's workstation software shall include field engineering tools for programming all controllers supplied. All controllers shall be programmed using graphical tools that allow the user to connect function blocks on screen that provide sequencing of all control logic. Function blocks shall be represented by graphical displays that are easily identified and distinct from other types of blocks. Graphical

programming that uses simple rectangles and squares is not acceptable.

2. Field engineering tool shall include Device Manager for detection of devices connected anywhere on the BACnet network by scanning of the entire network. This function shall display device instance, network identification, model number, and description of connected devices. It shall record and display software file loaded into each controller. A copy of each file shall be stored on the computer's hard drive. If needed, this file shall

be downloaded to the appropriate controller using the mouse.

3. System shall include backup/restore function that will back up entire system to selected medium and then restore system from that media. The system shall be capable of creating a backup for the purpose of instantiating a new client PC.

4. The system shall provide a means to scan, detect, interrogate, and edit third-party BACnet devices and BACnet objects within those devices.

M. Workstation Hardware

1. The existing Alerton Workstation/Server Computer minimum requirements

a. PC Processor of 2 GHz dual-core or better

b. 2 GB RAM or better

c. 80GB hard disk or better

d. High-performance graphics adapter

e. Ethernet 10/100 network interface card

f. Keyboard, monitor, mouse, USB port and CD-ROM

g. Windows XP Professional; Vista Business, Ultimate, or Enterprise; Server 2003; or Windows 7

h. Modem, 56Kbm Minimum

i. Color printer (inkjet, color dye or laser)

N. Software

1. At the conclusion of project, contractor shall leave with owner a CD ROM that includes the complete software operation system and project

graphics, setpoints, system parameters, etc. This backup shall allow the owner how to completely restore the system in the case of a computer malfunction.

2.2 WEB INTERFACE

A. General

The existing Alerton BAS supplier provides Web-based access to the system as part of standard installation. User must be able to access all displays of real-time data that are part of the BAS using a standard Web browser. Web browser shall tie into the network through owner-supplied Ethernet network connection. Web page host shall be a separate device that resides on the BAS BACnet network, but is not the BAS server for the control system. BAS server must be a separate computer from the Web page host device to ensure data and system integrity. The Web page software shall not require a per-user licensing fee or annual fees. The Web page host must be able to support on average 50 simultaneous users with the ability to expand the system to accommodate an unlimited number of users.

B. Browser Technology

Browser shall be standard version of Microsoft Internet Explorer v6.0 or later, Firefox v2.0 or later and Safari v2.0 or later (on Mac OS X). PDA browser connection shall be Pocket PC 2003, Windows Mobile 5.0, or Blackberry. No special vendor-supplied software shall be needed on computers running browser. All displays shall be viewable and the Web page host shall directly access real-time data from the BAS BACnet network. Data shall be displayed in real-time and update automatically without user interaction. User shall be able to change data on displays if logged in with the appropriate user name and password.

C. Communications

1. Web page host shall include two Ethernet network connections. One network connection shall be dedicated to BAS BACnet network and shall be used to gather real-time data from all the BACnet devices that form the BAS. This network shall communicate using BACnet, allowing the Web page host to gather data directly from units on the local LAN or from other projects connected over a WAN. This network shall also provide the connection to the BAS server for Web page generation.

2. The second Ethernet connection shall provide the physical connection to the Internet or an IP-based WAN. It shall be the port that is used for the browser to receive Web pages and data from the Web page host. The Web page host shall act as a physical barrier between the BAS network and the WAN or Internet connection that allows the browser to receive Web pages and data. The two separate network connections

provide for a physical barrier to prevent raw BACnet traffic being exposed on the IP network.

3. The Web page host shall provide for complete isolation of the IP and BACnet networks by not routing networking packets between the two networks.

4. BAS BACnet Ethernet network shall be provided and installed by the BAS supplier. Owner shall provide and incur any monthly charges of WAN/Internet connection.

D. Display of Data

1. Web page graphics shown on browser shall be replicas of the BAS displays. User shall need no additional training to understand information presented on Web pages when compared to what is shown on BAS displays. Web page displays shall include animation just as BAS displays. Fans shall turn, pilot lights shall blink, coils shall change colors, and so on.

2. Real-time data shall be shown on all browser Web pages. This data must be directly gathered using the BACnet network and automatically updated on browser Web page displays without any user action. Data on the browser shall automatically refresh as changes are detected without re- drawing the complete display.

E. Logging of Information User shall use standard browser technology to view all trend logs in system. User shall be able to view logged data in tabular form or graphical format. User shall be able to adjust time interval of logged data viewed and shall be able to adjust Y axis of data viewed in graphical format. User shall also be able to download data through the Web interface to local computer. Data shall be in CSV format.

F. Alarm Handling Web interface shall display alarms as they occur. User shall be able to acknowledge alarms using browser technology. In addition, user shall be able to view history of alarm occurrence over a user-selected time frame. In addition, those alarms may be filtered for viewing per user-selected options. A single selection shall display all alarms that have not been acknowledged.

G. Web Page Generation Web pages shall be automatically generated from the BAS displays that reside on the BAS server. User shall access Web page host through the network and shall initiate a Web page generation utility that automatically takes the BAS displays and turns them into Web pages. The Web pages generated are automatically installed on the Web page host for access using any computer's standard browser. Any system

that requires use of an HTML editor for generation of Web pages shall not be considered.

H. Password Security and Activity Log Access through Web browser shall utilize the same hierarchical security scheme as BAS system. User shall be asked to log on once the browser makes connection to Web page host. Once the user logs in, any and all changes that are made shall be tracked by the BAS system. The user shall be able to change only those items he or she has authority to change. A user activity report shall show any and all activity of the users who have logged in to the system, regardless of whether those changes were made using a browser or through the BAS workstation.

I. BACnet Communication Web server shall directly communicate to all devices on the BAS network using BACnet protocol. No intermediate devices shall be necessary for BACnet communication.

2.3 EXISTING BUILDING CONTROLLER

A. General Requirements

1. BACnet Conformance

   a. Building Controller shall be approved by the BTL as meeting the BACnet Building Controller requirements.

   b. Please refer to section 22.2, BACnet Functional Groups, in the BACnet standard, for a complete list of the services that must be directly supported to provide each of the functional groups listed above. All proprietary services, if used in the system, shall be thoroughly documented and provided as part of the submittal data. All necessary tools shall be supplied for working with proprietary information.

2. Building controller shall be of modular construction such that various modules may be selected to fit the specific requirements of a given project. At a minimum, modules shall consist of a power supply module, a BACnet Ethernet-MS/TP (master slave token passing) module, a BACnet MS/TP-only module, and a modem module for telephone communication. Those projects that require special interfaces may use Modbus modules as needed. However, all Ethernet communications and all controllers- including central plant controllers, advanced application controllers and unitary controllers-supplied by BAS manufacturer shall utilize the BACnet protocol standard.

3. Modules shall be selected to fit the particular project application. Up to seven modules shall be powered by a single power supply module. All

modules shall be panel-mounted on DIN rail for ease of addition and shall be interconnected using a simple plug-in cable. A module in the middle shall be replaceable without removing any other modules.

4. All modules shall be capable of providing global control strategies for the system based on information from any objects in the system, regardless if the object is directly monitored by the building controller module or by another controller. The software program implementing these strategies shall be completely flexible and user-definable. All software tools necessary for programming shall be provided as part of project software. Any systems utilizing factory pre-programmed global strategies that cannot be modified by field personnel on-site, using a WAN or downloaded through remote communications are not acceptable. Changing global strategies using firmware changes is also unacceptable.

5. Programming shall be object-oriented using control function blocks, and support DOC functions, 1000 Analog Values and 1000 Binary Values. All flowcharts shall be generated and automatically downloaded to controller. Programming tool shall be supplied and be resident on workstation. The same tool shall be used for all controllers.

6. Provide means to graphically view inputs and outputs to each program block in real-time as program is executing. This function may be performed using the operator's workstation or field computer.

7. Controller shall have sufficient memory to ensure high performance and data reliability. Battery shall provide power for orderly shutdown of controller and storage of data in nonvolatile flash memory. Battery backup shall maintain real-time clock functions for a minimum of 20 days.

8. Global control algorithms and automated control functions shall execute using 32-bit processor.

9. Schedules

10. Each building controller module shall support a minimum of 80 BACnet Schedule Objects and 80 BACnet Calendar Objects.

11. Building controller modules shall provide normal seven-day scheduling, holiday scheduling and event scheduling.

PART 3: EXECUTION

3.1 EXAMINATION

A. Prior to starting work, carefully inspect installed work of other trades and verify that such work is complete to the point where work of this Section may properly commence.

B. Notify the owner's representative in writing of conditions detrimental to the proper and timely completion of the work.

C. Do not begin work until all unsatisfactory conditions are resolved.

3.2 INSTALLATION (GENERAL)

A. Install in accordance with manufacturer's instructions.

B. Provide all miscellaneous devices, hardware, software, interconnections, installation, and programming required to ensure a complete operating system in accordance with the sequences of operation and point schedules.

3.3 LOCATION AND INSTALLATION OF COMPONENTS

A. Locate and install components for easy accessibility; in general, mount 48 inches above floor with minimum 3 feet of clear access space in front of units. Obtain approval on locations from owner's representative prior to installation.

B. All instruments, switches, transmitters, etc., shall be suitably wired and mounted to protect them from vibration, moisture, and high or low temperatures.

C. Identify all equipment and panels. Provide permanently mounted tags for all panels.

D. Provide stainless steel or brass thermowells suitable for respective application and for installation under other sections, and sized to suit pipe diameter without restricting flow.

3.4 INTERLOCKING AND CONTROL WIRING

A. Provide all interlock and control wiring. All wiring shall be installed neatly and professionally, in accordance with Specification Division 16 and all national, state and local electrical codes.

B. Provide wiring as required by functions as specified and as recommended by equipment manufacturers, to serve specified control functions. Provide shielded low capacitance wire for all communications trunks.

C. Control wiring shall not be installed in power circuit raceways. Magnetic starters and disconnect switches shall not be used as junction boxes. Provide auxiliary junction boxes as required. Coordinate location and

arrangement of all control equipment with the owner's representative prior to rough-in.

D. Provide auxiliary pilot duty relays on motor starters as required for control function.

E. Provide power for all control components from nearest electrical control panel or as indicated on the electrical drawings; coordinate with electrical contractor.

F. All control wiring in the mechanical, electrical, telephone and boiler rooms to be installed in raceways. All other wiring to be installed neatly and inconspicuously per local code requirements. If local code allows, control wiring above accessible ceiling spaces may be run with plenum-rated cable (without conduit).

3.5 DOC OBJECT TYPE SUMMARY

A. Provide all database generation.

B. Displays

1. System displays shall show all analog and binary object types within the system. They shall be logically laid out for easy use by the owner. Provide outside air temperature indication on all system displays associated with economizer cycles.

C. Run Time Totalization

1. At a minimum, run time totalization shall be incorporated for each monitored supply fan, return fan, exhaust fan, hot water and chilled water pumps. Warning limits for each point shall be entered for alarm and or maintenance purposes.

D. Trendlog

1. All binary and analog object types (including zones) shall have the capability to be automatically trended.

E. Alarm

1. All analog inputs (High/Low Limits) and selected binary input alarm points shall be prioritized and routed (locally or remotely) with alarm message per owner's requirements.

F. Database Save

1. Provide backup database for all standalone application controllers on disk.

3.6 FIELD SERVICES

A. Prepare and start logic control system under provisions of this section.

B. Start up and commission systems. Allow sufficient time for startup and commissioning prior to placing control systems in permanent operation.

C. Provide the capability for off-site monitoring at control contractor's local or main office. At a minimum, off-site facility shall be capable of system diagnostics and software download. Owner shall provide phone line for this service for one year or as specified.

D. Provide owner's representative with spare parts list. Identify equipment critical to maintaining the integrity of the operating system.

3.7 TRAINING

A. Provide application engineer to instruct owner in operation of systems and equipment.

B. Provide on-site training for the End-Users of the Alerton System. The Users are to be interviewed to create a curriculum for Training On-site for up to 16 hours as part of this contract.

3.8 DEMONSTRATION

A. Demonstrate complete operating system to owner's representative.

B. Provide certificate stating that control system has been tested and adjusted for proper operation.

Note: Refer to the system drawing for components mentioned in the sequence below.

Unit Control Overview

Return Air Temperature and Return Air Dew Point Temperature Control
The unit will operate to maintain the Return Air Temperature at set point and the Return Air Dew Point Temperature at set point.

The unit will operate in the "Occupied" Mode if the unoccupied Mode binary value is set to "Off" and will operate in the "Unoccupied" Mode if the unoccupied *Mode* binary value is set to "On".

Start Sequence

The DDC Start Sequence will be initiated whenever the HAND-OFF-AUTO (HOA) Switch is placed in the “HAND” position or when the DDC Remote Enable Contact (by others) is closed while the HOA Switch is in the “AUTO” position. The *Unit Enable* binary value must also be set to “On” by the BMS or LCD Display. The fan control sequence will then be executed.

To allow automatic dry-out of the evaporative media and shut-down the unit, it is only necessary to move the HOA switch from the "AUTO" to the "OFF" position or set the *Unit Enable* binary value to "Off".

Note that the "HAND" position will operate the unit in the Occupied Mode regardless of the *Unoccupied Mode* binary value and is intended to be a "Service Man's" function. In addition, if the HOA Switch is moved from "HAND" to "OFF", the automatic dry-out cycle will be terminated immediately and the unit will shut down.

Supply and Exhaust Fans

The Fan Motors will be started immediately and go to the Minimum Frequency Setting in the VFD Drive (typically 20Hz) when the Start Sequence is completed. Once fan operation has been proven by the respective airflow proving switches, The Supply Fan will modulate to deliver the supply airflow set point. The Exhaust Fan will modulate to maintain the space pressure. Air flow status is monitored by airflow switches. If the airflow switches are not made within 3 minutes after initial startup or for more than 30 seconds after the unit is running, a Fan Alarm will be generated and the unit will shut down. The HOA Switch or the *Unit Enable* binary value must be cycled "Off" to reset the Fan Alarm. After air flow has been proven and as long as a Fan Alarm does not exist, the following Sequence of Operation for component control will be allowed to execute.

Modulating Outside and Return Air Dampers for Return Dew Point Control

The unit will energize the Outside and Return Air Dampers Motors.

Whenever the Outside Air Dew Point is less than the Return Air Dew Point Set Point, the Outside and Return Air Dampers will modulate to maintain the Return Air Dew Point at the Return Air Dew Point Set Point. The dampers will be modulated above their minimum positions**.** Heat Exchanger Face and bypass dampers will modulate to maintain the R/A temperature at set point.

Heat Exchanger Dampers

a) The heat exchanger face and bypass dampers will be modulated to maintain the return air temperature at the return air temperature set point.

b) The heat exchanger face and bypass dampers will be used to protect the heat exchanger from freezing conditions and air flow volume overload. The face and bypass dampers will modulate as required to maintain the exhaust leaving air temperature above

the minimum allowed. Additionally, as the outside damper modulates above the outside air damper position to start heat exchanger bypass set point, the bypass damper will begin to open to allow the additional airflow volume to pass without overloading the heat exchanger.

c) The heat exchanger exhaust side bypass damper will modulate open as the outside air damper modulates above the outside air damper position to start heat exchanger bypass set point.

Direct Evaporative Cooling (DEC)

The DEC Sump will be enabled and filled when the Return Air temperature is greater than Return temperature set point, the Outdoor Dew Point is less than the Return Air *Dew Point set point* and the unit is not currently in the scheduled dump mode. The DEC Sump will be disabled but remain filled when the O/A Temperature drops below the calculated DEC change over set point. The DEC Sump will be disabled and dumped immediately if the Outdoor Air Temperature drops below the *Minimum Temperature for Sump* set point.

The DEC Pump will cycle on when the DEC Sump is enabled and full and the Supply Air Dew Point is less than the *S/A Dew Point Maximum to Allow DEC* set point. The pump will not run during the dump and flush cycle however the unit will continue to run the Fan and Damper control.

Whenever the DEC Sump is filled, it will remain filled until the unit is shut down or the nightly scheduled dump occurs. The Dump Schedule Time will initiate a sump dump for 55 minutes followed by a sump flush for 5 minutes. The fans will be forced to run for the *DEC Sump Dry Out Time* after the pump has been disabled. The DEC face and bypass dampers will modulate to maintain the R/A dew point at the set point.

Cooling and Dehumidification

DX Cooling will be enabled if the DEC is enabled and the R/A temperature is higher than the R/A temperature set point.

DX Dehumidification will be enabled when the return air Dew Point is greater than the *Return Air dew point Set Point.*

The DX system will be staged as required to maintain the Return Air Temperature at set point.

HEATING

HW coil will be enabled if the R/A temperature is less than the R/A temperature set point.

The HW coil valve will be modulated as required to maintain the R/A Temperature at set point.

END OF SECTION

FACILITY NATURAL GAS PIPING
(23 1123)

PART 1 - GENERAL

1.1 Related Documents

A. The general provisions of the Contract, including General and Special Conditions and the General Requirements, apply to the work specified in this section.

1.2 Description of Work

A. The Contractor shall furnish and install the Natural Gas System as shown on the drawings including specialties necessary for satisfactory operation of the system.

1.3 Related Work in Other Sections

23 0500 – COMMON WORK RESULTS FOR HVAC
23 0503 - PIPE AND TUBES FOR HVAC PIPING AND EQUIPMENT
23 0523 - GENERAL DUTY VALVES FOR HVAC PIPING

PART 2 - PRODUCTS

2.1 Pipe and Pipe Fittings

A. Natural gas piping system

1. Black steel: Above grade piping shall be Schedule 40, black steel pipe conforming to ASTM A-53, with 150 pound malleable iron screwed fittings conforming with ANSI B16.3 or seamless carbon steel weld fittings conform to ASTM A-234.

2. Underground piping shall be schedule 40 black steel pipe conforming to ASTM A-53 machine wrapped with Scotchwrap PVC tape using 50% overlap. Fittings and joints shall be double wrapped to a minimum 6 inches beyond the fitting. Pipe shall be primed prior to wrapping per manufacturer's recommendations. PVC or similar plastic piping materials may be used underground with written approval of the code authority and serving utility company.

B. All underground gas piping shall be welded.

C. All gas piping in any utilities tunnel shall be welded.

PART 3 - EXECUTION

3.1 Installation

A. Furnish and install all piping as indicated on the drawings, and all accessories in strict accordance with the applicable gas code.

B. All gas piping in any utilities tunnel shall be isolated from any metal to metal contact with hangers, supports, rails, etc.

C. Ventilated conduit shall be used to carry natural gas piping whenever such piping is run under any building, building sidewalk, structure, or through or within a concealed return air space. Ventilated conduit construction shall conform to the details shown on the drawings.

D. Gas trains connecting gas fired equipment shall conform to state requirements.

3.2 Tests

A. All gas piping shall be tested with air pressure of 60 psi and shall show no loss in pressure for a period of 24 hours on a gauge for recording pressure.

END OF SECTION

HYDRONIC PIPING
(23 2113)

PART 1 - GENERAL

1.1 SUMMARY

Section Includes:

1. Heating water piping, above ground.
2. Condenser water piping, above ground.
3. Radiant heating piping.
4. Equipment drains and over flows.
5. Unions and flanges.
6. Pipe hangers and supports.
7. Valves.
8. Bedding and cover materials.

Related Sections:

1. Pipes and Tubes for HVAC Piping and Equipment: Product and installation requirements for piping materials applying to various system types.
2. General-Duty Valves for HVAC Piping: Product requirements for valves for placement by this section.
3. Hangers and Supports for HVAC Piping and Equipment: Product requirements for pipe hangers and supports, sleeves, and firestopping for placement by this section.
4. HVAC Insulation: Product requirements for Piping Insulation for placement by this section.
5. Hydronic Piping Specialties: Product and execution requirements for piping specialties used in heating and cooling piping systems.

1.2 REFERENCES

A. American Society of Mechanical Engineers:

1. ASME B16.3 - Malleable Iron Threaded Fittings.

2. ASME B16.4 - Gray Iron Threaded Fittings.

3. ASME B16.18 - Cast Copper Alloy Solder Joint Pressure Fittings.

4. ASME B16.22 - Wrought Copper and Copper Alloy Solder Joint Pressure Fittings.

5. ASME B31.1 - Power Piping.

6. ASME B31.9 - Building Services Piping.

7. ASME Section IX - Boiler and Pressure Vessel Code - Welding and Brazing Qualifications.

B. ASTM International:
1. ASTM A53/A53M - Standard Specification for Pipe, Steel, Black and Hot-Dipped, Zinc-Coated, Welded and Seamless.

2. ASTM A234/A234M - Standard Specification for Piping Fittings of Wrought Carbon Steel and Alloy Steel for Moderate and High Temperature Service.

3. ASTM A395/A395M - Standard Specification for Ferritic Ductile Iron Pressure-Retaining Castings for Use at Elevated Temperatures.

4. ASTM A536 - Standard Specification for Ductile Iron Castings.

5. ASTM B32 - Standard Specification for Solder Metal.

6. ASTM B88 - Standard Specification for Seamless Copper Water Tube.

7. ASTM B584 - Standard Specification for Copper Alloy Sand Castings for General Applications.

8. ASTM D1784 - Standard Specification for Rigid Poly (Vinyl Chloride) (PVC) Compounds and Chlorinated Poly (Vinyl Chloride) (CPVC) Compounds.

9. ASTM D1785 - Standard Specification for Poly (Vinyl Chloride) (PVC) Plastic Pipe, Schedules 40, 80, and 120.

10. ASTM D2235 - Standard Specification for Solvent Cement for Acrylonitrile-Butadiene-Styrene (ABS) Plastic Pipe and Fittings.
11. ASTM D2241 - Standard Specification for Poly (Vinyl Chloride) (PVC) Pressure-Rated Pipe (SDR Series).

12. ASTM D2310 - Standard Classification for Machine-Made "Fiberglass" (Glass-Fiber-Reinforced Thermosetting-Resin) Pipe.

13. ASTM D2464 - Standard Specification for Threaded Poly (Vinyl Chloride) (PVC) Plastic Pipe Fittings, Schedule 80.

14. ASTM D2466 - Standard Specification for Poly (Vinyl Chloride) (PVC) Plastic Pipe Fittings, Schedule 40.

15. ASTM D2467 - Standard Specification for Poly (Vinyl Chloride) (PVC) Plastic Pipe Fittings, Schedule 80.

16. ASTM D2564 - Standard Specification for Solvent Cements for Poly (Vinyl Chloride) (PVC) Plastic Piping Systems.

17. ASTM D2661 - Standard Specification for Acrylonitrile-Butadiene-Styrene (ABS) Schedule 40 Plastic Drain, Waste, and Vent Pipe and Fittings.

18. ASTM D2680 - Standard Specification for Acrylonitrile-Butadiene-Styrene (ABS) and Poly (Vinyl Chloride) (PVC) Composite Sewer Piping.

19. ASTM D2751 - Standard Specification for Acrylonitrile-Butadiene-Styrene (ABS) Sewer Pipe and Fittings.

20. ASTM D2846/D2846M - Standard Specification for Chlorinated Poly(Vinyl Chloride) (CPVC) Plastic Hot- and Cold-Water Distribution Systems.

21. ASTM D2855 - Standard Practice for Making Solvent-Cemented Joints with Poly (Vinyl Chloride) (PVC) Pipe and Fittings.

22. ASTM D3309 - Standard Specification for Polybutylene (PB) Plastic Hot- and Cold-Water Distribution Systems.

23. ASTM F437 - Standard Specification for Threaded Chlorinated Poly (Vinyl Chloride) (CPVC) Plastic Pipe Fittings, Schedule 80.

24. ASTM F439 - Standard Specification for Socket-Type Chlorinated Poly (Vinyl Chloride) (CPVC) Plastic Pipe Fittings, Schedule 80.

25. ASTM F441/F441M - Standard Specification for Chlorinated Poly (Vinyl Chloride) (CPVC) Plastic Pipe, Schedules 40 and 80.

26. ASTM F493 - Standard Specification for Solvent Cements for Chlorinated Poly (Vinyl Chloride) (CPVC) Plastic Pipe and Fittings.

27. ASTM F708 - Standard Practice for Design and Installation of Rigid Pipe Hangers.

28. ASTM F845 - Standard Specification for Plastic Insert Fittings for Polybutylene (PB) Tubing.

29. ASTM F876 - Standard Specification for Crosslinked Polyethylene (PEX) Tubing.

30. ASTM F877 - Standard Specification for Crosslinked Polyethylene (PEX) Plastic Hot-and Cold-Water Distribution Systems.

31. ASTM F1476 - Standard Specification for Performance of Gasketed Mechanical Couplings for Use in Piping Applications.

C. American Welding Society:
   1. AWS A5.8 - Specification for Filler Metals for Brazing and Braze Welding.

   2. AWS D1.1 - Structural Welding Code - Steel.

D. American Water Works Association:
   1. AWWA C105 - American National Standard for Polyethylene Encasement for Ductile-Iron Pipe Systems.

   2. AWWA C110 - American National Standard for Ductile-Iron and Grey-Iron Fittings, 3 in. through 48 in. (75 mm through 1200 mm), for Water and Other Liquids.

   3. AWWA C111 - American National Standard for Rubber-Gasket Joints for Ductile-Iron Pressure Pipe and Fittings.

   4. AWWA C151 - American National Standard for Ductile-Iron Pipe, Centrifugally Cast, for Water.

E. Manufacturers Standardization Society of the Valve and Fittings Industry:
   1. MSS SP 58 - Pipe Hangers and Supports - Materials, Design and Manufacturer.

   2. MSS SP 67 - Butterfly Valves.

   3. MSS SP 69 - Pipe Hangers and Supports - Selection and Application.

   4. MSS SP 70 - Cast Iron Gate Valves, Flanged and Threaded Ends.

   5. MSS SP 71 - Cast Iron Swing Check Valves, Flanged and Threaded Ends.

   6. MSS SP 78 - Cast Iron Plug Valves, Flanged and Threaded Ends.

   7. MSS SP 80 - Bronze Gate, Globe, Angle and Check Valves.

   8. MSS SP 85 - Cast Iron Globe & Angle Valves, Flanged and Threaded.

   9. MSS SP 89 - Pipe Hangers and Supports - Fabrication and Installation Practices.

   10. MSS SP 110 - Ball Valves Threaded, Socket-Welding, Solder Joint, Grooved and Flared Ends.

1.3 SYSTEM DESCRIPTION

A. Where more than one piping system material is specified, provide compatible system components and joints. Use non-conducting dielectric connections whenever jointing dissimilar metals in open systems.

B. Provide flanges, union, and couplings at locations requiring servicing. Use unions, flanges, and couplings downstream of valves and at equipment or apparatus connections. Do not use direct welded or threaded connections to valves, equipment or other apparatus.

C. Provide pipe hangers and supports in accordance with ASME B31.1, and MSS SP 89.

D. Use ball or butterfly valves for shut-off and to isolate equipment, part of systems, or vertical risers.

E. Use globe ball or butterfly valves for throttling, bypass, or manual flow control services.

F. Use spring loaded check valves on discharge of hot water pumps.

G. Use plug valves for throttling service. Use non-lubricated plug valves only when shut-off or isolating valves are also provided.

H. Use butterfly valves in heating and chilled water systems interchangeably with gate and globe valves.

I. Use only butterfly valves in chilled and condenser water systems for throttling and isolation service.

J. Use lug end butterfly valves to isolate equipment.

K. Use 3/4 inch ball valves with cap for drains at main shut-off valves, low points of piping, bases of vertical risers, and at equipment. Pipe to nearest floor drain.

L. Flexible Connectors: Use at or near motor driven equipment where piping configuration does not absorb vibration.

1.4 SUBMITTALS

A. Shop Drawings: Indicate schematic layout of piping system, including equipment, critical dimensions, and sizes.

B. Product Data:

1. Piping: Submit data on pipe materials, fittings, and accessories. Submit manufacturers catalog information.

2. Valves: Submit manufacturers catalog information with valve data and ratings for each service.

3. Hangers and Supports: Submit manufacturers catalog information including load capacity.

C. Design Data: Indicate pipe size. Indicate load carrying capacity of trapeze, multiple pipe, and riser support hangers.

D. Test Reports: Indicate results of piping system pressure test.

E. Manufacturer's Installation Instructions: Submit hanging and support methods, joining procedures and isolation.

F. Manufacturer's Certificate: Certify products meet or exceed specified requirements.

G. Welders' Certificate: Include welders' certification of compliance with ASME Section IX.

1.5 CLOSEOUT SUBMITTALS

A. Execution and Closeout Requirements: Closeout procedures.

B. Project Record Documents: Record actual locations of valves, equipment and accessories.

C. Operation and Maintenance Data: Submit instructions for installation and changing components, spare parts lists, exploded assembly views.

1.6 QUALITY ASSURANCE

A. Perform Work in accordance with ASME B31.1 code for installation of piping systems and ASME Section IX for welding materials and procedures.

B. Perform Work in accordance with applicable authority for welding hanger and support attachments to building structure.

C. Maintain one copy of each document on site.

1.7 QUALIFICATIONS

A. Manufacturer: Company specializing in manufacturing products specified in this section with minimum three years experience, and with service facilities within 100 miles of Project.

B. Fabricator or Installer: Company specializing in performing Work of this section with minimum three years experience approved by manufacturer.

1.8 PRE-INSTALLATION MEETINGS

A. Convene minimum one week prior to commencing work of this section.

1.9 DELIVERY, STORAGE, AND HANDLING

A. Product Requirements: Product storage and handling requirements.

B. Accept valves on site in shipping containers with labeling in place. Inspect for damage.

C. Provide temporary end caps and closures on piping and fittings. Maintain in place until installation.

D. Protect piping systems from entry of foreign materials by temporary covers, completing sections of the Work, and isolating parts of completed system.

1.10 ENVIRONMENTAL REQUIREMENTS

A. Product Requirements.

B. Do not install underground piping when bedding is wet or frozen.

1.11 FIELD MEASUREMENTS

A. Verify field measurements prior to fabrication.

1.12 COORDINATION.

A. Coordinate trenching excavating bedding backfilling of buried piping systems with requirements of these specifications.

1.13 WARRANTY

A. Execution and Closeout Requirements: Product warranties and product bonds.

B. Furnish five year manufacturer warranty for valves excluding packing.

1.14 EXTRA MATERIALS

A. Execution and Closeout Requirements: Spare parts and maintenance products.

B. Furnish two packing kits for each size and valve type.

PART 2 – PRODUCTS

2.1 HEATING WATER PIPING, ABOVE GROUND

A. Steel Pipe: ASTM A53/A53M, Schedule 40, 0.375 inch wall for sizes 12 inch and larger, black.
   1. Fittings: ASME B16.3, malleable iron or ASTM A234/A234M, forged steel welding type.
   2. Joints: Threaded for pipe 2 inch and smaller; welded for pipe 2-1/2 inches and larger.

B. Copper Tubing: ASTM B88, Type K, hard drawn.
   1. Fittings: ASME B16.18, cast brass, or ASME B16.22 solder wrought copper.
   2. Tee Connections: Mechanically extracted collars with notched and dimpled branch tube.
   3. Joints: Solder, lead free, ASTM B32, 95-5 tin-antimony, or tin and silver, with melting range 430 to 535 degrees F.

2.2 CHILLED WATER PIPING, ABOVE GROUND

A. Steel Pipe: ASTM A53/A53M, Schedule 40, 0.375 inch wall for sizes 12 inch and larger, black.
   1. Fittings: ASME B16.3, malleable iron or ASTM A234/A234M, forged steel welding type.
   2. Joints: Threaded for pipe 2 inch and smaller; welded for pipe 2-1/2 inches and larger.

B. Copper Tubing: ASTM B88, Type K, hard drawn.
   1. Fittings: ASME B16.18, cast brass, or ASME B16.22, solder wrought copper.
   2. Tee Connections: Mechanically extracted collars with notched and dimpled branch tube.
   3. Joints: Solder, lead free, ASTM B32, 95-5 tin-antimony, or tin and silver, with melting range 430 to 535 degrees F.

2.3 EQUIPMENT DRAINS AND OVERFLOWS

A. Steel Pipe: ASTM A53/A53M Schedule 40, galvanized.
   1. Fittings: ASME B16.3, malleable iron or ASME B16.4, cast iron.

2. Joints: Threaded for pipe 2 inch and smaller; flanged for pipe 2-1/2 inches and larger.

B. Copper Tubing: ASTM B88, Type L, hard drawn.
1. Fittings: ASME B16.18, cast brass, or ASME B16.22 solder wrought copper.
2. Joints: Solder, lead free, ASTM B32, 95-5 tin-antimony, or tin and silver, with melting range 430 to 535 degrees F.

2.4 FLUE AND COMBUSTION AIR PIPING

A. CPVC Pipe: ASTM F441/F441M, Schedule 40, chlorinated polyvinyl chloride (CPVC) material.
1. Fittings: ASTM F438, CPVC, Schedule 40, socket type.
2. Joints: ASTM D2846/D2846M, solvent weld with ASTM F493 solvent cement. Prime joints with a contrasting color.

2.5 UNIONS AND FLANGES

A. Unions for Pipe 2 inches and Smaller:
1. Ferrous Piping: Class 150, malleable iron, threaded.
2. Copper Piping: Class 150, bronze unions with soldered.
3. Dielectric Connections: Union with galvanized or plated steel threaded end, copper solder end, water impervious isolation barrier.
4. PVC Piping: PVC.
5. CPVC Piping: CPVC.

B. Flanges for Pipe 2-1/2 inches and Larger:
1. Ferrous Piping: Class 150, forged steel, slip-on flanges.
2. Copper Piping: Class 150, slip-on bronze flanges.
3. PVC Piping: PVC flanges.
4. CPVC Piping: CPVC flanges.
5. Gaskets: 1/16 inch thick preformed neoprene gaskets.

C. PVC Pipe Materials: For connections to equipment and valves with threaded connections, furnish solvent-weld socket to screwed joint adapters and unions, or ASTM D2464, Schedule 80, threaded, PVC pipe.

2.6 GATE VALVES

A. Manufacturers:
1. Crane Valve, North America
2. Hammond Valve
3. Milwaukee Valve Company
4. NIBCO, Inc.
5. Stockham Valves & Fittings
6. Substitutions: Section 01 60 00 - Product Requirements.

B. 2 inches and Smaller: MSS SP 80, Class 125, bronze body, bronze trim, threaded bonnet, rising stem, lock-shield stem, inside screw with back-seating stem, solid wedge disc, alloy seat rings, solder or threaded ends.

C. 2-1/2 inches and Larger: MSS SP 70, Class 125, cast iron body, bronze trim, bolted bonnet, rising stem, hand-wheel, outside screw and yoke, solid wedge disc with bronze seat rings, flanged ends. Furnish chain-wheel operators for valves 6 inches and larger mounted over 8 feet above floor.

2.7 GLOBE VALVES

A. Manufacturers:
   1. Crane Valve, North America
   2. Hammond Valve
   3. Milwaukee Valve Company
   4. NIBCO, Inc.
   5. Stockham Valves & Fittings
   6. Substitutions: Section 01 60 00 - Product Requirements.

B. 2 inches and Smaller: MSS SP 80, Class 125, bronze body, bronze trim, threaded bonnet, hand wheel, teflon composition disc, solder or threaded ends.

C. 2-1/2 inches and Larger: MSS SP 85, Class 125, cast iron body, bronze trim, hand wheel, outside screw and yoke, flanged ends. Furnish chain-wheel operators for valves 6 inches and larger mounted over 8 feet above floor.

2.8 BALL VALVES

A. Manufacturers:
   1. Crane Valve, North America
   2. Hammond Valve
   3. Milwaukee Valve Company
   4. NIBCO, Inc.
   5. Stockham Valves & Fittings
   6. Substitutions: Section 01 60 00 - Product Requirements.

B. 2 inches and Smaller: MSS SP 110, 400 psi WOG, one piece bronze body, chrome plated brass ball, full port, teflon seats, blow-out proof stem, solder or threaded ends with union, lever handle with balancing stops.

C. 2 inches and Smaller: MSS SP 110, Class 150, bronze, two piece body, chrome plated bronze ball, full port, teflon seats, blow-out proof stem, solder or threaded ends with union, lever handle with balancing stops.

D. 2 inches and Smaller: MSS SP 110, Class 150, bronze, three piece body, chrome plated bronze ball, full port, teflon seats, blow-out proof stem, solder or threaded ends, lever handle with balancing stops.

E. 2 inches and Smaller: MSS SP 110, Class 150, bronze, two piece body, type 316 stainless steel ball with vent hole, full port, reinforced teflon seats, stainless steel stem, threaded ends, lever handle with balancing stops.

F. 2 inches and Smaller: MSS SP 110, Class 150 Stainless steel, two piece body, stainless steel ball, reinforced teflon seats and stuffing box ring, threaded ends, lever handle with balancing stops.

G. 2 inches and Smaller: 150 psi at 73 degrees F water temperature, maximum service temperature: 140 degrees F ASTM D1784 PVC body and ball, double lever handle, EPDM seals, teflon seats, full port, single union type with threaded ends.

H. 2 inches and Smaller: 150 psi at 73 degrees F water temperature, maximum service temperature: 210 degrees F, ASTM D1784 CPVC body and ball, double lever handle, EPDM seals, teflon seats, full port, single union type with threaded ends.

2.9 PLUG VALVES

A. Manufacturers:
   1. DeZURIK, Unit of SPX Corp.
   2. Flow Control Equipment, Inc.
   3. Homestead Valve
   4. Substitutions: Section 01 60 00 - Product Requirements.

B. 2 inches and Smaller: MSS SP 78, Class 150, semi-steel construction, round port, full pipe area, pressure lubricated, teflon packing, threaded ends. Furnish one plug valve wrench for every ten plug-valves with minimum of one wrench.

C. 2-1/2 inches and Larger: MSS SP 78, Class 150, semi-steel construction, round port, full pipe area, pressure lubricated, teflon packing, flanged ends. Furnish wrench-operated.

2.10 BUTTERFLY VALVES

A. Manufacturers:
   1. Crane Valve, North America
   2. Hammond Valve
   3. Milwaukee Valve Company
   4. NIBCO, Inc.

5. Stockham Valves & Fittings
6. Substitutions: Section 01 60 00 - Product Requirements.

B. 2-1/2 inches and Larger: MSS SP 67, Class 150.
   1. Body: Cast or ductile iron, wafer ends, stainless steel stem, extended neck.
   2. Disc: Nickel-plated ductile iron or stainless steel.
   3. Seat: Resilient replaceable EPDM.
   4. Handle and Operator: 10 position lever handle. Furnish gear operators for valves 8 inches and larger, and chain-wheel operators for valves mounted over 8 feet above floor.

C. 2 inches through 10 inches: 150 psi at 73 degrees F water temperature, maximum service temperature: 140 degrees F, one piece body, ASTM D1784 PVC, lug type flange facing, disc encapsulated with EPDM, stainless steel shaft, locking lever handle.

D. 2 inches through 10 inches: 150 psi at 73 degrees F water temperature, maximum service temperature 210 degrees F, one piece body, ASTM D1784 CPVC, lug type flange facing, disc encapsulated with EPDM, stainless steel shaft, locking lever handle.

2.11 CHECK VALVES

A. Horizontal Swing Check Valves:
   1. Manufacturers:
      a. Crane Valve, North America
      b. Hammond Valve Milwaukee Valve Company
      c. NIBCO, Inc.
      d. Stockham Valves & Fittings
      e. Substitutions: Section 01 60 00 - Product Requirements.
   2. 2 inches and Smaller: MSS SP 80, Class 150, bronze body and cap, bronze seat, teflon disc, solder or threaded ends.
   3. 2-1/2 inches and Larger: MSS SP 71, Class 125, cast iron body, bolted cap, bronze or cast iron disc, renewable disc seal and seat, flanged ends.

B. Spring Loaded Check Valves:
   1. Manufacturers:
      a. Crane Valve, North America
      b. Hammond Valve
      c. Milwaukee Valve Company
      d. NIBCO, Inc.
      e. Stockham Valves & Fittings
      f. Substitutions: Section 01 60 00 - Product Requirements.
   2. 2 inches and Smaller: MSS SP 80, Class 250, bronze body, in-line spring lift check, silent closing, teflon disc, integral seat, solder or threaded ends.

3. 2-1/2 inches and Larger: MSS SP 71, Class 125, wafer style, cast iron body, bronze seat, center guided bronze disc, stainless steel spring and screws, flanged ends.

2.12 PIPE HANGERS AND SUPPORTS

A. Manufacturers:
   1. Carpenter & Paterson Inc.
   2. Creative Systems Inc.
   3. Flex-Weld, Inc.
   4. Glope Pipe Hanger Products Inc.
   5. Michigan Hanger Co.
   6. Superior Valve Co.
   7. Substitutions: Section 01 60 00 - Product Requirements.

B. Conform to ASME B31.1, and MSS SP 89.

C. Hangers for Pipe Sizes 1/2 to 1-1/2 inch: Carbon steel, adjustable swivel, split ring.

D. Hangers for Cold Pipe Sizes 2-1/2 inches and Larger: Carbon steel, adjustable, clevis.

E. Hangers for Hot Pipe Sizes 2 to 4 inches: Carbon steel, adjustable, clevis.

F. Hangers for Hot Pipe Sizes 6 inches and Larger: Adjustable steel yoke, cast iron roll, double hanger.

G. Multiple or Trapeze Hangers: Steel channels with welded spacers and hanger rods.

H. Multiple or Trapeze Hangers for Hot Pipe Sizes 6 inches and Larger: Steel channels with welded spacers and hanger rods, cast iron roll.

I. Wall Support for Pipe Sizes 3 inches and Smaller: Cast iron hooks.

J. Wall Support for Pipe Sizes 4 inches and Larger: Welded steel bracket and wrought steel clamp.

K. Wall Support for Hot Pipe Sizes 6 inches and Larger: Welded steel bracket and wrought steel clamp with adjustable steel yoke and cast iron roll.

L. Vertical Support: Steel riser clamp.

M. Floor Support for Cold Pipe: Cast iron adjustable pipe saddle, lock nut, nipple, floor flange, and concrete pier or steel support.

N. Floor Support for Hot Pipe 4 inches and Smaller: Cast iron adjustable pipe saddle, lock nut, nipple, floor flange, and concrete pier or steel support.

O. Floor Support for Hot Pipe Sizes 6 inches and Larger: Adjustable cast iron roll and stand, steel screws, and concrete pier or steel support.

P. Copper Pipe Support: Carbon steel rings, adjustable, copper plated.

Q. Hanger Rods: Mild steel threaded both ends, threaded one end, or continuous threaded.

R. Inserts: Malleable iron case of galvanized steel shell and expander plug for threaded connection with lateral adjustment, top slot for reinforcing rods, lugs for attaching to forms; size inserts to suit threaded hanger rods.

2.13 BEDDING AND COVER MATERIALS

A. Soil Backfill from Above Pipe to Finish Grade: Subsoil with no rocks over 6 inches in diameter, frozen earth or foreign matter.

PART 3 – EXECUTION

3.1 EXAMINATION.

A. Verify excavations are to required grade, dry, and not over-excavated.

3.2 PREPARATION

A. Ream pipe and tube ends. Remove burrs. Bevel plain end ferrous pipe.

B. Remove scale and dirt on inside and outside before assembly.

C. Prepare piping connections to equipment with flanges or unions.

D. Keep open ends of pipe free from scale and dirt. Protect open ends with temporary plugs or caps.

3.3 INSTALLATION – INSERTS

A. Provide inserts for placement in concrete forms.

B. Provide inserts for suspending hangers from reinforced concrete slabs and sides of reinforced concrete beams.

C. Provide hooked rod to concrete reinforcement section for inserts carrying pipe 4 inches and larger.

D. Where concrete slabs form finished ceiling, locate inserts flush with slab surface.

E. Where inserts are omitted, drill through concrete slab from below and provide through-bolt with recessed square steel plate and nut recessed into and grouted flush with slab.

3.4 INSTALLATION - PIPE HANGERS AND SUPPORTS

A. Install in accordance with ASME B31.9 and MSS SP 89.

B. Support horizontal piping as scheduled.

C. Install hangers to provide minimum 1/2 inch space between finished covering and adjacent work.

D. Place hangers within 12 inches of each horizontal elbow.

E. Use hangers with 1-1/2 inch minimum vertical adjustment. Design hangers for pipe movement without disengagement of supported pipe.

F. Support vertical piping at every floor. Support riser piping independently of connected horizontal piping.

G. Where installing several pipes in parallel and at same elevation, provide multiple pipe hangers or trapeze hangers.

H. Provide copper plated hangers and supports for copper piping.

I. Prime coat exposed steel hangers and supports. Hangers and supports located in crawl spaces, pipe shafts, and suspended ceiling spaces are not considered exposed.

J. Provide clearance in hangers and from structure and other equipment for installation of insulation and access to valves and fittings.

3.5 INSTALLATION - BURIED PIPING SYSTEMS

A. Verify connection to existing piping system size, location, and invert are as indicated on Drawings.

B. Establish elevations of buried piping with not less than two ft of cover.

C. Establish minimum separation of services in accordance with local code.

D. Remove scale and dirt on inside of piping before assembly.

E. Install heating water chilled water and steam supply and steam condensate return piping in accordance with ASME B31.1.

F. Install pipe to elevation as indicated on Drawings.

G. Place bedding material at trench bottom to provide uniform bedding for piping, level bedding materials in one continuous layer not exceeding 4 inches compacted depth; compact to 95 percent maximum density.

H. Install pipe on prepared bedding.

I. Route pipe in straight line.

J. Install pipe to allow for expansion and contraction without stressing pipe or joints.

K. Install trace wire continuous buried 6 inches below finish grade, above pipe line; coordinate with Section.

L. Install Work in accordance with State of New Mexico standards.

3.6 INSTALLATION - ABOVE GROUND PIPING SYSTEMS

A. Install heating water and chilled water piping in accordance with ASME B31.1.

B. Install Work in accordance with State of New Mexico standards.

C. Route piping parallel to building structure and maintain gradient.
D. Install piping to conserve building space, and not interfere with use of space.

E. Group piping whenever practical at common elevations.

F. Sleeve pipe passing through partitions, walls and floors.

G. Install firestopping at fire rated construction perimeters and openings containing penetrating sleeves and piping.

H. Provide access where valves and fittings are not exposed.

I. Slope hydronic piping and arrange systems to drain at low points. Use eccentric reducers to maintain top of pipe aligned.

J. Where pipe support members are welded to structural building framing, scrape, brush clean, and apply one coat of zinc rich primer to welds.

K. Install valves with stems upright or horizontal, not inverted.

L. Insulate piping and equipment.

3.7 FIELD QUALITY CONTROL

A. Execution and Closeout Requirements: Field inspecting, testing, adjusting, and balancing.

B. Test heating water piping system chilled water piping system in accordance with ASME B31.9.

3.8 SCHEDULES

A. Copper and Steel Pipe Hanger Spacing:

PIPE SIZE Inches	COPPER TUBING MAXIMUM HANGER SPACING Feet	STEEL PIPE MAXIMUM HANGER SPACING Feet	COPPER TUBING HANGER ROD DIAMETER Inches	STEEL PIPE HANGER ROD DIAMETER Inches
1/2	5	7	3/8	3/8
3/4	5	7	3/8	3/8
1	6	7	3/8	3/8
1-1/4	7	7	3/8	3/8
1-1/2	8	9	3/8	3/8
2	8	10	3/8	3/8
2-1/2 (Note 1)	9	11	1/2	1/2
3	10	12	1/2	1/2
4	12	14	1/2	5/8
5	13	16	1/2	5/8
6	14	17	5/8	3/4

8	16	19	3/4	3/4
10	18	22	3/4	7/8
12	19	23	3/4	7/8
14	22	25	7/8	1
16	23	27	7/8	1
18	25	28	1	1
20	27	30	1	1-1/4
24	28	32	1-1/4	1-1/4

B. Note 2: 20 feet maximum spacing, minimum of one hanger for each pipe section close to joint behind bell. Provide hanger at each change of direction and each branch connection. For pipe sizes 6 inches and smaller, subjected to loadings other than weight of pipe and contents, limit span to maximum spacing for water service steel pipe.

END OF SECTION

HYDRONIC PIPING SPECIALTIES
(23 2116)

PART 1 - GENERAL

1.1 Requirements: Contractor shall furnish and install all piping specialties necessary for satisfactory operation of the systems. Conform with applicable provisions of the General Conditions, Supplementary Conditions and General Requirements.

1.2 Related Sections

A. See Section 23 0523 for General Duty Valves for HVAC Piping.

B. See Section 23 0503 for Pipe and Tubes for HVAC Piping and Equipment.

C. See Section 23 0500 for Common Work Results for HVAC.

1.3 Submittal Data: Contractor shall furnish complete submittal data for all piping specialties including manufacturer's specifications, performance characteristics, ratings, installation instructions, certifications and approvals of listing agencies, wiring diagrams, and selection analysis.

PART 2 - PRODUCTS

2.1 Strainers

A. Strainers suitable for the application shall be furnished and installed on the high pressure side of pressure reducing valves, pressure regulating valves, suction side of pumps, inlet of indicating and control instruments and equipment subject to sediment damage, and as shown on the Drawings. Strainers shall be "Y"-type unless basket strainers are indicated. Tee-type strainers will not be accepted. Strainer element shall be removable without disconnecting piping. Screens shall be Type 304 stainless steel with 1/8" perforations for water service, and 1/16" perforations for steam, air and gas services. Every strainer shall be provided with a blow-off ball valve the full size of the strainer outlet tapping. Startup screens shall be provided and installed in all strainers.

B. Strainers 2" and under for copper piping systems shall be threaded connection, bronze body, 250 psig maximum working pressure, suitable for steam, oil, gas and liquid service, Sarco BT or equivalent.

C. Strainers 2" and under for steel piping systems shall be threaded connection, bronze body, as specified above or cast iron body as specified herein, except all strainers in galvanized steel domestic water systems shall be bronze body. Cast

iron strainers shall be threaded connection, 250 Psig maximum working pressure, suitable for steam, oil, gas and liquid service, Sarco IT or equivalent.

D. Strainers 2-1/2" or larger shall be standard flanged connection ANSI-125 cast iron body, suitable for steam, oil , gas, and liquid service, 125 maximum working pressure at 353º F maximum temperature, Sarco C1-125 or equivalent.

2.2 Suction Diffusers: Suction diffusers shall be furnished and installed at the suction of pumps where indicated on the Drawings. Suction diffuser outlet shall be not less than pump suction size and suction diffuser system inlet shall be a minimum of one size larger than suction diffuser outlet size. Suction diffuser shall provide for a smooth flow of water into the pump inlet, and shall be complete with strainer, adjustable support leg, and start-up strainer. Start-up strainer shall be removed at the final testing and balancing phase.

2.3 Pressure Gauges

A. Pressure gauges for water, non-corrosive liquids, and gases shall be Weiss Series UG-1, Style B, Marshalltown, Ashcroft, Trerice, or equivalent. Gauges shall be 4-1/2" diameter, unless otherwise indicated, aluminum case with back flange, black enamel finish, aluminum threaded ring, aluminum dial with white background and black lines and numerals, bronze bourdon tube with brass socket and 1/4" NPT bottom connection. Accuracy shall be 1/2 of 1% of full scale range, minimum.

B. Pressure range shall be indicated on the Drawings or if not indicated shall be selected so that the normal operating pressure is approximately 50% of the scale range. Provide compound and vacuum ranges when required by the application.

C. Provide 1/2" NPT brass pressure snubber for all gauges with properly selected filter disc for the application. Steam gauges shall be provided with 1/2" brass straight coil siphon. Provide a 1/2" brass gauge valve, Hoke 300 Series, or equivalent, for each gauge. Where a single gauge is shown with multiple pressure sensing points, such as pump suction, discharge and strainer pressure drop applications, provide a gauge valve for each pressure sensing point.

D. Gauges shall be installed in such a manner as to be easily readable from floor level. This shall include piping to an adjacent location and mounting gauges on wall or frames where required.

2.4 Thermometer and Thermometer Wells

A. Thermometers shall be Weiss, Moeller, Trerice, Duro, or equivalent, 9" case, straight form, back angle, or vari-angle arrangement as required by the installation requirements. Cases shall be v-shaped design, high pressure die cast aluminum, baked enamel finish, with heavy glass protected front firmly

secured with spring action. Tube and capillary shall be mercury filled-magnifying lens "red reading" with accuracy of 1% of scale range, minimum. Stem shall be 3-1/2" for piping sizes through 6" and 6" for piping sizes 8" and larger. Provide brass separable sockets sized for stem lengths required for the applications. Extension neck separable sockets shall be provided for installation in conjunction with insulated piping systems.

B. Thermometer scale ranges shall be as indicated on the Drawings or if not indicated shall be selected as required for the services. Typical ranges shall be follows:

Chilled water	0 - 120 degrees F
Heating water < 120 degrees F	0 - 160 degrees F
Heating water > 120 degrees F	30 - 240 degrees F
Condenser/cooling tower water	0 - 120 degrees F
Domestic cold water	0 - 120 degrees F
Domestic hot water	30 - 180 degrees F

C. Thermometers shall be field calibrated as required to provide accurate readings.

D. Thermometers shall be installed in such a manner as to be easily readable from floor level. Provide vari-angle thermometers as necessary to meet this requirement.

2.5 Manual Air Vents

A. Provide manual air vents at locations indicated on the Drawings, at the high point of all liquid piping system and as otherwise required for proper air elimination and liquid circulation.

B. Manual air vents shall be 1/2" brass ball valves, Class 125. Provide brass square head plug on valve outlet.

2.6 Automatic Air Vent: Provide automatic air vents at locations indicated on the Drawings. Automatic air vents shall be 3/4" size, minimum. Provide manual shut-off ball valve between automatic air vent and piping system. Automatic air vents shall be float type, 150 Psig maximum working pressure, 3/4" NPT system connection, Amtrol Model No. 720 or equivalent.

2.7 Manual Drain Valves: Provide manual drain valves at locations indicated on the Drawings, at the low points of all liquid piping systems, and as otherwise required for proper draining of systems. Manual drain valves shall be sized as shown on the Drawings but not less than 3/4" size, brass ball valve, Class 125. Pipe discharge from

drain valves to floor drain, floor sink, or as otherwise directed for indirect discharge into sanitary sewer system. For drain valves located above ceiling or in location outside Mechanical equipment areas provide hose connection for valve discharge.

2.8 Temperature And Pressure Test Plugs: Where shown on the Drawings, and on the inlet and outlet of each coil, heat exchanger, heating and cooling water generating equipment, heat rejection equipment and heat recovery equipment and 3-way control valve, furnish and install temperature and pressure test plugs with Nordel valve cores and 1/2" NPT brass body with gasketed cap. Test plugs shall be Peterson Equipment #110, or equivalent. The combination pressure temperature test wells shall be a minimum of 1/2" standard pipe thread.

2.9 Water Flow Measuring Devices: Furnish and install cast iron water type flow meter equivalent to Bell & Gossett "OP-Series", at locations indicated in the Drawings. Flow meters shall be equipped with two brass readout valves with integral EPT insert and check valve designed to minimize system fluid loss during monitoring process. Flow meter shall be furnished with a calibrated nameplate specifying the flow range through a range of differential pressures. Water flow measuring devices shall be not less than full line size with maximum pressure drop of 10 feet.

2.10 Flexible Connectors

A. Furnish and install flexible connectors at locations indicated on the Drawings and at all piping connections associated with equipment mounted on or hung from vibration isolators. Flexible connectors shall be constructed of multiple ply nylon cord fabric and neoprene, operating pressure 150 Psig at 220ºF through 12" size and operating pressure of 125 Psig high pressure design at 220ºF for sizes 14" through 24". Provide butyl or hypolon liner and applications with fluid temperatures in excess of 225ºF.

B. Flexible connectors shall be single or twin sphere with Class 150 flange connections for sizes 2-1/2" and larger and threaded connections with galvanized female unions for sizes 3/4" through 2". Mason Industries MFNC, or equivalent.

C. Installation of flexible connectors shall be in strict accordance with manufacturer's recommendations. Spacing between piping system flanges shall be based on the flexible connector's expanded length corresponding to the system's operating pressure. Control rods or cables shall be provided for units installed in unanchored applications where system operating pressure and dynamic forces exceeds manufacturer's recommendations for unrestrained installations.

D. For piping systems utilizing grooved pipe with Mechanical couplings, flexible connectors consisting of a minimum of three (3) stacked couplings, equivalent to

Victaulic Style 75, between 6" long grooved nipples may be substituted for the neoprene units specified herein.

2.11 Expansion Tank: Furnish and install diaphragm type, pre-pressurized, ASME code construction 125 Psig working pressure, expansion tank in horizontal or vertical arrangement as shown on the Drawing and required for equipment space allocation. Properly sized expansion tanks shall be provided for all closed circuit hydronic systems. Connect expansion tank to the low pressure side of the piping system with 3/4" minimum line size, provide quarter-turn ball valve with handle removed for manual isolation valve. Contractor shall field verify expansion tank air charge and re-charge as required to maintain correct system pressurization and tank expansion volume. Expansion tanks shall be Amtrol, Woods, Armstrong, or equivalent.

2.12 Air Separator

A. Furnish and install air separator, inline or tangential type as shown on the Drawings for all closed circuit hydronic systems. Inline air separators shall be fabricated of steel or cast iron, 125 Psig working pressure. Tangential type air separators shall be ASME code construction for 125 Psig working pressure and shall be furnished with internal perforated stainless steel air collection tube, bottom blow down connection and removable stainless steel strainer element with 3/16" perforations and free area of not less than five times the cross-sectional area of the connecting piping.

B. Each air separator shall be provided with an automatic air vent, 3/4" size, Amtrol Model No. 720 or equivalent, with manual shut-off ball valve between automatic air vent and air separator.

C. Air separators shall be full line size and installed at the high point of the piping system unless otherwise indicated in the Drawings.

D. Air separators shall be Amtrol, Woods, Armstrong or equivalent.

2.13 Water Pressure Regulating Valves

A. Furnish and install water pressure regulating valves, Watts U5B or equivalent, 3/4" size minimum for water makeup to all hydronic systems and at other locations as shown on the Drawings. Water pressure regulating valves shall be brass body, union inlet with integral strainers, 300 Psig maximum working pressure, with built-in thermal expansion bypass.

B. For high water capacity applications provide Watts 2235B or equivalent.

C. Provide high or low pressure range depending on application requirements. Set pressure shall be as shown on the Drawings, or as required to provide a

minimum system pressurization of 12 psig at the system's highest point for closed circuit hydronic systems or as recommended by equipment manufacturers.

2.14 Water Pressure Relief Valves

A. Furnish and install ASME labeled, National Board Stamped, water pressure relief valves, Watts Series 174A or 740 or equivalent, 3/4" size minimum for relief of all water makeup to all closed circuit hydronic systems. Properly sized relief valves shall be provided where required for over-pressure protection on heat exchangers, converters, boiler, and pressure vessels, and other locations as shown in the Drawings.

B. Relief valves shall be sized for the full system heating capacity, to match the makeup capacity, or as otherwise required to protect the system from over-pressure conditions. Relief valves shall be factory pre-set for maximum pressure rating shown in the Drawings, or for approximately 125% of the system operating pressure, but in no case shall the relief valve setting exceed the maximum safe operating pressure of the system and system components and equipment.

2.15 Water Temperature and Pressure Relief Valves

A. Furnish and install ASME labeled, National Board stamped water temperature and pressure relief valves, Watts or equivalent, for all domestic water heaters, domestic water storage tanks, and other locations indicated in the Drawings.

B. Water temperature and pressure relief valves shall be sized for the full system heating capacity at 210ºF maximum operating temperature and shall be furnished with the required valve thermostat tube extension length.

2.16 Solenoid Valves and Electric Modulating Valves

A. Furnish and install electric solenoid valves as shown on the Drawing and as required for the operation of the Mechanical Systems. Valves associated with safety protection of systems including freeze-protection, drain down, etc. shall be provided such that in the event of a power failure the system shall fail to a safe operating condition.

B. See Section 23 0500, Common Work Results for HVAC and Section 23 0923, Direct Digital Control System for HVAC for requirements associated with Electrical control and power wiring for valves. Furnish hazardous duty enclosure where required by the application.

2.17 Flow Switches

A. Furnish and install flow switches where required for protection and/or monitoring of Mechanical equipment including water chillers, boilers, pumps, etc. and as otherwise shown on the equipment schedule, and the Drawings.

B. Flow switches shall be either paddle type or differential pressure type as required by the application and as shown on the Drawings, except differential pressure type flow switches shall be utilized for water chillers and other applications where minor pressure fluctuation could cause nuisance tripping of equipment operation.

C. Paddle type flow switch shall be McDonnell and Miller Model FS7-4 Series designed for industrial duty, brass body and trim, 300 Psig maximum working pressure, paddle size as required for application, single pole double throw switches, with Electrical rating of 7.4 full load amps at 115 vac. Provide hazardous duty enclosure where required by the application. Flow switches shall be installed in a horizontal pipe with inlet and outlet conditions necessary to provide trouble-free operation.

D. Differential pressure flow switch shall be as specified on the Drawings.

E. Differential pressure switches shall be properly supported on the equipment controlled or wall mounted adjacent to the equipment or piping system.

2.18 Electrical Heat Tracing System

A. Furnish and install electric heat tracing system for winterizing protection for all liquid piping systems exposed to the outdoor ambient environment and piping systems in the unheated areas.

B. Heating cable shall be self-regulating rapid trace, type SRL, low temperature, heating cable rated at 150ºF maximum maintenance temperature and suitable for 185ºF maximum exposure temperature, or type SRM medium temperature heating cable rated at 250ºF maximum maintenance temperature and suitable for 375ºF maximum exposure temperature, as required by the application and as manufactured by Chromolux or equivalent. Heating cable shall be flexible, parallel circuit construction consisting of a continuous self-limiting resistance, conducive inner core material between two parallel copper bus wires, designed for cut-to-length at the job site by the Contractor and suitable for wrapping around piping valves and complex fittings. Self-regulation shall prevent overheating and burnouts even where the cable overlaps itself. Provide end seals for ends of circuits. Wire at the ends of circuits shall not be tied together.

C. Heating Tracing System shall be furnished with all accessories required for the complete installation including the power supply connection fitting and stainless steel mounting brackets with stainless steel worm gear clamp to fasten bracket to pipe, 1/2" wide fiberglass reinforced pressure sensitive cloth tape as required to fasten cable to pipe at not greater than 12" intervals. Furnish pipe surface

temperature control thermostat with capillary and copper bulb sensor, cast aluminum NEMA (water- tight) enclosure, 1/2" NPT conduit hub, SPST switch with required rating at 115 vac through 5 kW systems capacity and 480 volt single phase, 60 Hz for system heating capacities in excess of 5 kW. Set thermostat to maintain pipe surface temperature at not less than 34ºF. Furnish and install piping labels on systems with electric heat tracing, manufacturer's standard (NEC code), labeled or stamped "ELECTRICTRACED" labels shall be installed on the insulation pipe jacket at 10 foot intervals along the pipe on alternating sides.

D. Electric Heat tracing system sizing shall be provided as recommended by the manufacturer to maintain pipe surface temperature at 34ºF minimum during the winter outdoor design temperature of 0ºF with 15 mph wind velocity, and the normal system fluid operating temperature. See Section 23 0700, HVAC Insulation for insulation characteristics and thickness associated with Electrical heat traced systems. Piping system insulation shall be oversized as required to accommodate the heating cable, coordinate with Section 23 0700.

E. See Sections 23 0500, Common Work Results for HVAC and Section 23 0923, Direct Digital Control System for HVAC for requirements associated with Electrical control and power wiring.

F. Package heat tapes with integral thermostat and "press-to-test" device may be utilized for small freeze protection systems, subject to review and acceptance by the Engineer.

2.19 Expansion Joints

A. Furnish and install corrugated bellows expansion joint, Hyspan Series 1500 or equivalent, self-equalizing, 150 Psig working pressure at 850ºF, Class 150 ASA flange connections 1-1/2" size and above, single or dual center base configuration as shown on the Drawings, constructed of corrugated Type 304 or 321 stainless steel, ring controlled, with integral stainless steel or monel sleeve, and removable carbon steel external housing to protect bellows and support insulation. Furnish limit rods to prevent expansion joint from exceeding rated travel. Joint design shall be for maximum flexibility over 10,000 cycles minimum.

B. Expansion joint sizing and installation shall be as shown on the Drawing and as recommended by the manufacturer.

C. Expansion joints shall be insulated with flexible 2" minimum thickness of high temperature fiberglass blanket insulation furnished with joint and installed under the external protective housing.

D. Contractor shall carefully check expansion joint limit rods and make adjustments as required to ensure proper joint movement and operation.

2.20 Expansion Compensators

A. Furnish and install expansion compensators, Hyspan series 8500 or equivalent, stainless steel laminated bellows with stainless steel or carbon steel shroud, 175 psig pressure rating at 250º F, 2" straight line expansion and 1/2" contraction. Furnish copper tube with sweat ends for compensators installed in copper piping systems. Furnish standard wall carbon steel pipe tube for compensators installed in steel piping systems, threaded connectors for sizes 2" and smaller and Class 150 ASA flange connection for sizes 2-1/2" or larger.

B. Expansion compensators sizing and installation shall be as shown on the Drawings and as recommended by the manufacturer.

2.21 Pipe Alignment Guides

A. Furnish and install factory fabricated steel pipe alignment guides, Hyspan Series 9500 or equivalent, to maintain the longitudinal position of pipe centerline between expansion joints and compensators with axial restraint. Alignment guides shall consist of a bolted two-section outer cylinder and base with two-section guiding spider bolted tight to the pipe guide. Guide and spider shall be sized to clear pipe and pipe insulation and long enough to prevent over travel of spider and cylinder. Guides shall not be used for pipe support.

B. Alignment guides shall be arranged and installed as shown on the Drawings and as recommended by the manufacturer.

2.22 Pipe Anchors

A. Pipe anchors shall be constructed of welded steel as detailed on the Drawings. Pipe anchors shall be attached to the building structure in a manner approved by the Engineer.

B. Pipe anchors shall be arranged as shown on the Drawings and as required to properly control/piping system expansion and contraction in conjunction with system flexibility due to off-sets, bends, and loops and expansion joints and compensators.

PART 3 - EXECUTION

3.1 Installation

A. All specialties shall be installed in accordance with the best standard practices and as recommended by the manufacturer.
B. Where thermometers, gauges, vents and test fittings occur in insulated piping systems or on insulated equipment, extension necks shall be provided to extend beyond the insulation.

3.2 Air Vents

A. Manual air vents shall be installed at the high points in all heating and cooling piping systems.

B. Automatic air vents shall be installed at locations indicated on the Drawings. Automatic air vents shall be installed level and in accordance with manufacturer's directions to properly vent system, complete with individual isolation valves.

3.3 Strainers

A. All strainer screens, including basket strainers and suction diffusers, shall be removed and cleaned prior to construction testing and balancing work and shall be maintained clean through project final acceptance by the Owner. Suction diffuser start-up strainers shall be removed later by the Owner.

B. All strainers shall be installed with an adjacent union to facilitate easy removal.

3.4 Test and Adjustment

A. Contractor shall field adjust all water pressure regulating valves, flow switches, water level controls, steam pressure reducing valves and specialties to provide required system operation.

B. Contractor shall field test and verify the operation of all safety devices including water and steam relief valves and temperature and pressure relief valves.

3.5 Relief Valve Discharge

A. Water pressure relief valve and water temperature and pressure relief valve discharges shall be piped full size to the outside of the building or discharged indirectly in a properly sized building floor drain or floor sink as approved by the Engineer and allowed by the Building Mechanical and Plumbing Codes. When the operating discharge temperature is in excess of 212ºF, the discharge shall be equipped with a splash shield or centrifugal separator.

B. Water reduced pressure backflow preventer discharge shall be piped full size to the outside of the building or discharged indirectly into a properly sized building floor drain or floor sink as approved by the Engineer. Provide a bronze air gap funnel with stainless steel fasteners for installation under reduced pressure backflow prevention relief valve.

END OF SECTION

HVAC AIR DISTRIBUTION
(23 3000)

PART 1 - GENERAL

1.1 Requirements

A. Conform with applicable provisions of the General Conditions, the Special Conditions and General Requirements.

B. See Sections 23 0500 and 23 0923 for general Mechanical requirements.

1.2 Work Specified Elsewhere

A. Controls are specified under Section 23 0923.

B. Insulation and Acoustical Treatment are specified under Section 23 0700.

C. Painting of equipment is covered under "Painting" in these Specifications.

D. Electrical Work as noted in Section 23 0500, "Common Work Results for HVAC".

E. Duct chases, wall openings, and equipment foundations are under Architectural and Structural sections of these Specifications.

1.3 Sound Levels: Sound levels attributable to Mechanical equipment such as terminal units, centrifugal fans, etc. are designed to result in sound levels of NC 40 for offices, conference rooms, etc. measured within the rooms. Mechanical equipment that has been substituted for the specified equipment shall perform within the specified equipment sound limitations, or will be replaced or adjusted as required. Sound levels attributable to duct vibration that result in noticeable noise or vibration to duct hangers, lighting fixtures, ceiling tees or diffusers shall be re-supported or adjusted until the disturbing noise is brought within acceptable limits.

1.4 Dimensions

A. The Contractor shall check all Drawings furnished upon their receipt and shall promptly notify the Engineer of any discrepancies.

B. The Contractor shall compare all drawings and verify all dimensions both on the Drawings and in the field before laying-out, cutting, and fabricating the work.

C. Sheet metal work that is cut and fabricated from the Contract Drawings without dimensional verification will be at the risk of the Contractor.

D. Refer to Section 23 0500, Common Work Results for HVAC, for coordination Drawing requirements.

PART 2 - PRODUCTS

2.1 Equipment Schedules: All major items of equipment are specified in the Equipment Schedules on the Drawings and shall be furnished complete with all accessories normally supplied with the catalog item listed and all other accessories necessary for a complete and satisfactory operating system.

2.2 Ductwork

A. Materials: Construct all ducts, casings, plenums etc. from galvanized steel sheets. Sheets shall be free of blisters, slivers, pits, and imperfectly galvanized spots. Reinforcing angles and bars, and duct support materials shall be galvanized steel. No lined duct is allowed on the supply side of the Air Handler filters.

B. Low and High Velocity Supply Duct Construction and Gauges: Construct low and high velocity ductwork as specified in the current SMACNA HVAC Duct Construction Standards, for the following pressure classes:

Duct Element Description	Relative Pressure	Pressure Class
Outside air louver to Filter	Negative	1"
Discharge to terminal unit	Positive	4”
Terminal Unit to Diffuser	Positive	1”
From Return grille to Fan	Negative	1”
From exhaust register to Exhaust Fan	Negative	1”

C. Supply ductwork downstream of terminal units to be 1" static pressure duct construction.

D. All exhaust ductwork except special ductwork specified herein shall be fabricated to 1" duct construction standards.

E. Sealing: Sealing shall be as required in the SMACNA Duct Construction Standards for construction pressure classes. Minimum sealing requirements are as follows:

Seal Class	Sealing Required	Pressure Class
A	All transverse joints, longitudinal seams and duct wall penetrations	4” and over
B	All transverse joints and longitudinal seams	3”

F. Tape and sealant shall not exceed a flame spread of 25 or a smoke development of 50, and shall be UL certified for flame spread and smoke development. High velocity spiral lockseam conduit shall be joined and sealed in any of the following three (3) methods.

G. Paint inside of female and outside of male joints with high velocity sealer, join, attach with sheet metal screws, and repaint exterior with high velocity sealer.

H. Join female and male joints, attach with sheet metal screws, coat exterior joint with "Hardcast" .

I. Low velocity supply duct that is not acoustic lined, and all exhaust ductwork and return air except exposed fume hood and kitchen hood ductwork shall have both longitudinal and traverse joints sealed with "Hardcast", or with high velocity sealer. Exhaust duct leakage as measured by summing CFM at individual registers shall be limited to 10 % of the flow rate (CFM) measured at the fan. Exhaust and return air registers leaking at the ceiling joint, where air is being drawn from the ceiling cavity instead of being exhausted from die room, shall be sealed with duct tape and high velocity cement.

2.3 Flexible Ducts

A. Flexible ducts shall maintain dimensional integrity and shall be designed for the duct pressures encountered. Flexible ducts shall be insulated similar to, and with the same heat transfer coefficients, as the connected ductwork. Flexible ductwork shall not exceed a flame spread rating of 25 or a smoke development rating of 150. Flexible ducts shall not exceed 5 ft. in length. Connections to rectangular ducts may be by spin-in fittings with hand dampers.

B. Flexible ducts for connections between low, medium, or high velocity ductwork and high pressure terminal units shall be a high pressure type capable of holding 10" of static pressure with] dimensional stability and without developing leaks, and shall be equal to Technaflex 57K UL Class 1 insulated air duct. Installation of flexible duct shall ensure that the inside radius of bends shall not be less than the duct diameter.

2.4 Flexible Connections: Provide flexible connections, not less than 4" wide, constructed of heavy waterproof woven plastic coated glass fabric at locations indicated on the Drawings and at the inlet and outlet connection of each fan unit where directly connected to duct system. Flexible connections shall be securely fastened to the equipment and to the ductwork by a galvanized iron band, provided with tightening screws. Fabric for flexible connections used in special exhaust systems shall be compatible for service. Provide steel spring vibration isolators spanning across flexible connections of isolated fan housings to prevent blow-apart horizontal displacement of fan housings. Flexible connections exposed to the ultra violet rays of the sun shall be equal to Ventlon as manufactured by Ventfabrics, Inc.

2.5 Fire, Smoke and Radiation Damper Installation: Fire, smoke, and radiation dampers shall be installed in strict accordance with the latest edition of the Sheet Metal and Air Conditioning Contractors National Association's Fire, Smoke, and Radiation Damper Installation Guide for HVAC Systems. This document shall govern if different from details on Drawings. Dampers must be installed using the manufacturer's installation instructions that result from UL testing.

2.6 One and One-Half Hour Fire Dampers: Furnish and install, at the locations shown on plans, fire dampers constructed and tested in accordance with UL Safety Standard 555. Each fire damper shall have a 1-1/2 hour fire protection rating, 165ºF fusible link, and shall include a UL label in accordance with established UL labeling procedures. Damper Manufacturer's literature submitted for approval prior to installation shall include comprehensive performance data developed from testing in accordance with AMCA Standard 500 and shall illustrate pressure drops for all sizes of dampers required at all anticipated air flow rates. Fire dampers shall be equipped for vertical or horizontal installation as required by the location shown. Fire dampers shall be installed in wall and floor openings utilizing steel sleeves, angles, other materials and practices required to provide an installation equivalent to that utilized by the manufacturer when dampers were tested at UL. Installation shall be in accordance with the damper manufacturer's instructions. Fire dampers shall be Ruskin type IBD or equivalent.

2.7 Ceiling Diffuser/Fire Damper/Radiation Shields: All ceiling register and grille openings in fire rated ceilings shall be protected by UL Fire Resistance Classified ceiling fire dampers. Fire dampers with 1-1/2 or 3 hour ratings for walls or floors are not to be used in fire rated ceiling openings. Each ceiling diffuser opening shall be protected with appropriate UL fire Resistance Classified Ceiling Diffuser Radiation Shields. The UL Fire Resistance Classification shall apply to the specific ceiling system design and diffusers, grille, or register construction being installed. All installations shall be in accordance with manufacturer' s published installation instructions. Lay in ceiling diffusers shall be a minimum of 24 gage steel construction. Ceiling diffuser radiation shield shall consist of an appropriate ceiling fire damper protecting the diffuser neck and a thermal insulating blanket protecting the diffuser pan. The entire system shall be UL Classified for use in all UL fire rated floor/ceiling and roof/ceiling systems with fire resistance ratings of three hours or less. System proposed for installation must be equivalent in all respects to Ruskin Model CFD5 Ceiling Diffuser Radiation Shield or equivalent.

2.8 Combination Fire and Smoke Dampers

A. Furnish and install at locations shown on plans smoke dampers meeting or exceeding the following Specifications. Frame shall be a minimum of 16 gage galvanized steel formed into a structural hat channel shape with tabbed corners for reinforcement. Bearings shall be stainless steel turning in an extruded hole in the frame. The blades shall be airfoil shaped double skin construction with 14 gage equivalent thickness. Blade edge seals shall be silicone rubber designed to

withstand 450ºF and jamb seal shall be stainless steel flexible metal compression type. Blade action must be parallel blade or opposed as shown on the schedule.

B. Each combination fire smoke damper shall be 1-1/2 hour fire rated under UL Standard 555, and shall further be classified by Underwriters laboratories as a Leakage Rated Damper for use in smoke control systems under the latest version of UL 555S, and bear UL label attesting to same. Damper manufacturer shall have tested, and qualified with UL, a complete range of damper sizes covering all dampers required by this Specification. Testing and UL qualifying a single damper size is not acceptable. The leakage rating under UL 555S shall be no higher than leakage Class I (4 cfm/ft. at 1" w.g. and 8 cfm/ft. at 4" w.g.)

C. As part of the UL qualification, dampers shall have demonstrated a capacity to operate (to open and close) under HVAC system operating conditions, with pressures of at least 4" w.g. in the closed position, and 4000 fpm air velocity in the open position.

D. Manufacturer shall provide factory assembled sleeve or 16" minimum length (Contractor to verify requirement). Factory supplied caulked sleeve shall be 20 gage for dampers through 84" wide and 18 gage above 84" wide. Damper and actuator assembly shall be factory cycled 10 times to assure operation.

2.9 Actuators

A. In addition to the leakage ratings already specified herein, the smoke dampers and their pneumatic actuators shall be qualified under UL 555S to an elevated temperature of 250ºF, 350ºF, or 450ºF depending upon the actuator. Appropriate actuators shall be installed by the damper manufacturer at time of damper fabrication. Damper and actuator shall be supplied as a single entity that meets all applicable UL 555S qualifications for both dampers and actuators. Damper and actuator assembly shall be factory cycled 10 times to assure operation. All wiring or piping material required to interconnect the actuator with detection and/or alarm or other systems shall be furnished by others as detailed elsewhere in the Specification, Damper shall be Ruskin Model SDRS25 or equivalent.

B. Combination fire and smoke dampers shall be Ruskin FSD 60 or equivalent.

2.10 Access Doors: Access doors are required in walls and ceilings to service fire dampers. Low pressure duct access doors shall be equal to Ruskin ADH-2 with 24 gauge galvanized steel frame with foam gasket seal, hinged 24 gauge galvanized steel exterior and interior panel with foam board sandwich insulation, and cam locks. Medium and high pressure duct access doors shall be equal to Ruskin ADHP-3 with 16 gage galvanized steel frame and door, polyurethane foam gasket, sandwich insulation and capable of duct pressures up to 12" water gauge. Size of access doors in low velocity ductwork shall be 2" less than the duct height, up to a maximum size

of 12 x 24. Size of fire dampers in medium and high velocity ductwork shall be similarly sized.

2.11 Louvers

A. Description:

1. Frame and Blades:

a. Frame and blades fabricated from 6063-T52 extruded aluminum alloy with sections minimum 0.081" thick including reinforcing bosses.

b. All blades shall be "storm type" supported and aligned with heavy gauge extruded aluminum braces, positively interlocked to each blade and Mechanically secured to structural angles with aluminum and stainless steel fasteners

B. General:

1. Net open area for air passage shall be at least 50% of nominal size, or louver size shall be increased proportionally.

2. Supports to be 2" x 2" x 1/4" angles minimum, 48" on center maximum.

3. Structural supports shall be designed by louver manufacturer to carry wind load of not less than forty-five (45) pounds per square foot.

4. Accessories and Related Components:

5. All louvers shall be furnished with 1/2" mesh, 0.063" diameter wire intercrimp bird screen secured in removable extruded aluminum frames.

6. Louvers shall be furnished with vertical mullions, sills, blade stiffeners, etc. fabricated from extruded aluminum with anodized finish to match color of louver.

C. Model/Manufacturer:

1. Per plan.

2. Contractor must coordinate louver size and construction with Structural openings to assure proper fit.

2.12 Filters: Filters shall be as listed in the schedule on the Drawings. Furnish one set of 2" thick throwaway temporary filters to protect the equipment until Testing and Balancing commences or until the Owner takes beneficial occupancy when testing

and balancing commences. Furnish and install the filters specified in the Mechanical Equipment Schedule when the Owner takes beneficial occupancy. Only one set of high efficiency filters will be furnished and installed.

2.13 Filter Gauge: Not used.

2.14 Duct Thermometers: Not used.

2.15 Turning Vanes: Turning vanes shall be installed in all square elbows in low velocity supply and exhaust ductwork. Turning vanes shall be high efficiency profile type with single surfaced air-foil bladed shapes equal to Aero/Dyne Co., Airsan, Elgen, or equivalent.

2.16 Terminal Units: Terminal units shall be as listed in the schedule on the Drawings.

2.17 Fans

A. Centrifugal fans shall be as listed in the schedule on the Drawings.

B. All fans shall be rated in accordance with AMCA requirements.

2.18 Coils: Heating and cooling coils shall be ARI certified design and manufacture. Tube diameter, fin style, circuiting, and capacity requirements shall be as listed on the Equipment schedules. In no case shall specified air or water pressure drops be exceeded more than 5 percent. Piping connections shall be as shown on the Drawings. Coils shall be as specified in the equipment schedule on the Drawings. In no case shall rows or fin spacing be less than the minimum surface scheduled. Two (2) access doors shall be required at each coil with one (1) being installed, to provide access, on each side of the coil.

PART 3 - EXECUTION

3.1 Installation of Sheet Metal Work

A. General: All necessary allowance and provisions shall be made in the installation of sheet metal ducts for the structural conditions of the building, and ducts shall be transformed or divided as may be required at no change in Contract price. Whenever this is necessary, the required area shall be maintained. All of these changes, however, must be approved and installed as directed at project. During the installation the open ends of ducts shall be protected to prevent debris and dirt from entering.

B. Whenever exposed ducts pass through walls, floors, or ceilings, a flanged sheet metal collar fitting close around ducts shall be slipped along duct until flange is tight against finished surface covering edges of openings and presenting a neat appearance. Collar shall be locked to duct.

3.2 Cleaning

A. All ducts, coils, housing, registers, grilles, fans, etc., shall be clean when installed and shall be kept clean until the system is completed. As the various parts of the system are installed, they shall be wiped or blown clean and openings taped dust-tight with heavy paper or cardboard until the system is completed and ready for testing. At that time all covers and protective wrappings shall be removed. Where one has been torn or previously removed, the duct, coil, register, etc., shall be carefully cleaned of any dirt or dust that has entered the opening.

B. Before the ceiling is installed and final connections are made to the high velocity terminal units, it will be required that the fans be operated at full capacity to blow out dirt and debris from ducts. If it is not practical to use the main supply blower for this test, the ducts may be blown out in sections by a portable fan. After the ducts have been cleaned, the final connections shall be made to the high velocity units.

3.3 Acoustical Lining: The acoustical lining shall be as specified, Mechanical Systems Insulation.

3.4 Hand Dampers: Install hand operated volume dampers at locations and of sizes shown. Volume dampers shall be controlled by heavy duty locking quadrants mounted on the outside of the duct. Where ducts are insulated, the damper rod shall be extended and the operator shall be mounted on the outside of the insulation. All damper fittings must be heavy commercial items and must be approved by the Engineer before installation.

3.5 Cross Breaking

A. Low velocity rectangular sheet metal ducts shall be cross broken on the four sides of each 4-foot panel. All vertical and horizontal sheet metal barriers, duct offsets, elbows, as well as 4-foot panels of straight sections of ducts shall be cross broken. Cross breaking shall be applied to the sheet metal between the standing seams or reinforcing angles; the center of cross break shall be of the required height to assure surfaces being rigid.

B. High velocity plenum panels shall not be cross broken.

3.6 Test Holes in Ductwork: Furnish test holes in ducts at locations required, Testing and Balancing, for testing of air quantities in ducts. Close test holes with rubber plugs. Insulated ductwork is to be resealed with the same insulation material after completion of testing and balancing.

3.7 Single Wall Fan Plenums

A. Single wall field erected fan plenums and ductwork as detailed on the Drawings shall be shop fabricated of 16 ga. galvanized sheet steel. Horizontal and vertical panels are to be fabricated of 2' x 10' sheets. Unless otherwise dimensioned on the Drawings, and to prevent breaking a seam, access door frames are not to be wider than 16-3/4". Where door width exceeds 16-3/4", vertical panels shall be fabricated around 2" x 2" x 1/4" angle. If the plenum height or width exceeds 9'-0", a 2-1/2" x 1/8" continuous galvanized steel strip is to be placed between each horizontal and vertical seam. High velocity cement is to be applied at each joint during panel assembly. Panels are to be bolted as shown on the details or tack welded at the Contractor's option; however, enough panels must be bolted to allow removal of equipment from the plenums. The interior surfaces of the fan plenums shall be covered with 2" thick, 3 pound density acoustical lining.

B. Plenum Access Doors:

C. Walk-through type doors at plenums shall be provided with two fastening devices that can be operated on either side of the door; these devices to be readily operated and moving parts to have bronze pins. All parts of the door shall be constructed of galvanized iron and shall be airtight. Provide signs for access doors "CAUTION - SHUT OFF FANS BEFORE ENTERING" on return air, outside and supply air plenums and ducts. Latches shall be "Ventlock" no. 310 or equivalent.

3.8 Hangers and Supports

A. Hangers for ducts up to 18" width or diameter shall be placed on not more than 10 foot centers. Ducts 19" and over in width or diameter shall be supported on not more than 5-foot centers. Hangers shall be placed plumb and present a neat appearance. Construct hangers for high velocity boxes from uni-strut. Refer to SMACNA Table 4.2 for hanger spacing and rod or strap (no wire) hanger details for round duct and Table 4. 1 for rectangular ductwork. It is essential that all ducts shall be rigidly supported. Where vertical ducts pass through floors or roofs, heavy supporting angles shall be attached to ducts, and to structure. Angles shall be of sufficient size to support the ductwork rigidly and shall be placed on at least two sides of the duct.

B. High velocity round ducts 30" and larger in diameter are to be supported with 2" x 2" x 1/8" black steel rolled angle rings.

3.9 Gauges: All duct thermometers and filter gauges shall be installed such that they are easily readable from the floor.

3.10 Testing: The complete air tempering system will be tested and balanced as specified. If any equipment fails to produce the specified conditions due to installation, performance, or workmanship, the Contractor shall make any necessary changes to satisfy the specified conditions.

3.11 Testing for Leakage

A. The leakage amount shall not exceed the allotted amount for the pressure class or the allotted amount for that portion of the system, whichever is applicable.

DUCT CONSTRUCTION CLASS	LEAKAGE CLASS
10" W.G.	3
6" W.G.	6
4" W.G.	6
3" W.G.	12

NOTE: See Section 4 of the SMACNA leakage test manual for normal classification.
If leakage must be tested then test procedures shall follow the outlines and classifications in the SMACNA HVAC Duct Leakage Test manual
If the ductwork fails to meet allotted leakage level, the Contractor shall modify to bring it into compliance and shall retest it until acceptable leakage is demonstrated.

END OF SECTION

GENERAL PROVISIONS
(26 0100)

PART 1 GENERAL

1.1 The general provisions of the Contract, including General Conditions, Supplementary General Conditions (if any) and General Requirements apply to the work specified in this section.

1.2 ELECTRICAL DIVISION INDEX

26 0100	General Provisions
26 1100	Raceways
26 1200	Wires and Cables
26 1300	Outlet Boxes
26 1330	Cabinets
26 1400	Wiring Devices
26 1500	Motors
26 1550	Motor Starters
26 1600	Panelboards
26 1700	Motor and Circuit Disconnects
26 1810	Fuses
26 1900	Relays and Contactors
26 4500	Grounding
26 5020	Ballasts and Accessories

1.3 REQUIREMENTS

A. Furnish all labor, materials, service, equipment and appliances required to complete the installation of the complete Electrical System in accordance with the Specifications and Contract Drawings.

B. Refer to the Table in Division 23, Section 230900, 1.02 A for specific direction on items to include or exclude from this work.

1.4 REQUIREMENTS OF REGULATORY AGENCIES AND STANDARDS

A. Regulatory Agencies: Installation, materials, equipment and workmanship shall conform to the applicable provisions of the National Electrical Code (NEC), the National Electrical Safety Code (NESC) and the terms and conditions of the Electrical Utility and other authorities having lawful jurisdiction pertaining to the work required. All modifications required by these codes, rules, regulations and authorities shall be made by the Contractor without additional charge.

B. Underwriters Laboratories (UL) or Factory Mutual (FM): All materials, appliances, equipment or devices shall conform to the applicable standards of Underwriters Laboratories, Inc. or Factory Mutual, Inc. The label of, or listing by, UL or FM is required.

C. Standards: Where referenced in these Specifications or on the Drawings, the publications and standards of the following organizations shall apply: Joint Commission on Accrediation of Healthcare Organizations (JCAHO), American Society of Testing and Materials (ASTM), Insulated Power Cable Engineers Association (IPCEA), National Fire Protection Association (NFPA), American National Standards Institute (ANSI), and National Electrical Manufacturers Association (NEMA).

D. Conflicting code requirements shall be brought to the attention of the Engineer. Where two or more codes apply, the most stringent of the codes shall govern.

1.5 SUBMITTALS AND SUBSTITUTIONS

A. Material List: Within 30 days of Contract Award or Notice to Proceed and before material is ordered, the Contractor shall submit for approval a list of all proposed material and equipment, indicating manufacturer's name and general description.

B. Shop Drawings: Submit for approval a minimum of six copies of all shop drawings no later than 30 days after the material list has been approved and prior to ordering any material. Show complete outlines, dimensions, electrical services, control diagrams, electrical characteristics of special nature or critical to the installation and pertinent data required for installation. Indicate in the transmittal that submittal has been reviewed and accepted and all Contract deviations identified. In addition to specific references or requests; submit shop drawings for the following applicable items: panel boards, lighting fixtures, transformers, primary cable and gear, alarm systems and all special equipment.

C. Substitutions may be requested in accordance with the specification.

PART 2 PRODUCTS

2.1 EQUIPMENT REQUIREMENTS: The Electrical requirements for equipment specified or indicated on the Drawings are based on information available at the time of design. If equipment furnished for installation has Electrical requirements other than indicated on the Electrical Drawings, the Contractor shall make all adjustments to wire and conduit size, controls, overcurrent protection and installation as required to accommodate the equipment supplied, without additional charge to the Owner. All adjustments to the Drawings reflecting the Electrical System shall be delineated in a submittal to the Engineer immediately upon knowledge of the required adjustments. The complete responsibility and costs for such adjustments shall be assigned to the respective section of these Specifications in which the equipment is furnished.

2.2 MATERIALS

A. All similar materials and equipment shall be the product of the same manufacturer.

B. Where no specific material, apparatus or appliance is mentioned, any first-class product made by a reputable manufacturer may be used, providing it conforms to the Contract requirements and meets the approval of the Engineer.

C. Materials and equipment shall be the standard products of manufacturers regularly engaged in the production of such material and shall be the manufacturer's current and standard design.

2.3 ALTITUDE: Equipment affected by altitude shall perform satisfactorily the function intended at the altitude of the project site. The altitude of this project is 5250 feet mean sea level.

PART 3 EXECUTION

3.1 GENERAL: Fabrication, erection and installation of the complete Electrical System shall be done in a first class workmanlike manner by qualified personnel experienced in such work and shall proceed in an orderly manner so as not to hold up the progress of the project. The Contractor shall check all areas and surface where Electrical equipment or material is to be installed, removed or relocated and report any unsatisfactory conditions before starting work. Commencement of work signifies this Contractor's acceptance of the prevailing conditions.

3.2 TEMPORARY POWER AND LIGHTING: Furnish and install all temporary Electrical facilities required for construction and safety operation. No part of the permanent Electrical Systems or the existing Electrical System may be used for temporary service unless approved by the Engineer. Circuity feeding through construction area to other occupied areas to remain energized.

3.3 UTILITIES

A. GENERAL: The Drawings reflect requirements of the serving utilities based on information derived from representatives of the utilities. During the project design phase, the fact that the Engineer may undertake to show the utility(s) requirements, does not necessarily indicate that the Engineer represents the utilities or their requirements; therefore, within 10 working days after Contract Award and/or Notice to Proceed has been issued, the Contractor shall be responsible for coordinating the requirements of the utilities for the Power System. The Owner shall be responsible for coordinating the requirements for the Telephone and Television Systems.

B. Any deviations from the documents shall be brought to the attention of the Engineer no later than 10 working days after Award of Contract and/or Notice to Proceed. Failure to notify the Engineer within the 10-day time frame signifies the acceptance of documents and utility requirements by the Contractor and all associated costs therein.

3.4 EXCAVATION: Comply with Earthwork section.

3.5 PERFORMANCE TESTS

A. Thoroughly test all fixtures, services and all circuits for proper operating conditions and freedom from grounds and short circuits before acceptance is requested. All equipment appliances and devices shall be operated under load conditions.

B. After the interior-wiring system installation is complete and at such time as the Engineer may direct, conduct operating tests for approval. When requested, test

all the wire, cable, devices and equipment after installation to assure that all material continues to possess all the original characteristics as required by the governing codes and standards as listed in these Specifications.

C. After occupancy of the building has taken place and nominal building power loads have been established, make voltage readings at all panel boards. Based on these readings make final adjustments of taps on all transformers in the building as directed by the Engineer. Submit to Engineer correspondence and/or drawing delineating readings.

D. Perform such other tests as required by other sections of these Specifications or as requested by the Engineer to prove acceptability.

E. Furnish all instruments and labor for testing.

3.6 OPERATING INSTRUCTIONS AND MANUALS

A. Instructions: Without additional charge to the Owner, the Contractor shall provide an experienced and competent representative to instruct the Owner or his representative fully in the concept, theory, operations, adjustment and maintenance of all equipment furnished for the Electrical System. Contractor shall provide at least two (2) weeks' notice to the Engineer in advance of this period.

B. Manuals: Upon completion of the work, prepare and deliver to the Owner two (2) sets of complete operating and maintenance manuals for the systems and major equipment installed. Include catalog data, shop drawings, wiring diagrams, performance curves and rating data, spare parts lists and manufacturer's operating and maintenance data. Operating and maintenance manuals as required herein shall be submitted to the Engineer for review and distribution to the Owner not less than two (2) weeks prior to the scheduled final acceptance of the Project.

C. Other: The above requirements are in addition to specific instruction and manuals specified for individual systems or equipment.

3.7 DRAWINGS

A. General: The Electrical Drawings show the general arrangement of all conduit, equipment, etc. and shall be followed as closely as actual building construction and the work of other trades will permit. The Architectural and Structural Drawings shall be considered as a part of the work insofar as these Drawings furnish the Contractor with information relating to the design and construction of the building. Architectural Drawings shall take precedence over Electrical Drawings. The Contractor shall investigate the structural and finish conditions affecting the work and shall arrange his work accordingly, providing such fittings, elbows, pullboxes and accessories as may be required to meet such conditions.

B. Field Measurements: The Contractor shall verify the dimensions governing the Electrical work at the building. No extra compensation shall be claimed or allowed on account of differences between actual dimensions and those indicated on the Drawings.

3.8 LOCATION OF EQUIPMENT AND OUTLETS

A. The approximate locations of cabinets, panelboards, wiring gutters, switches, light outlets, power outlets, etc., are indicated on the Drawings; however, the exact location shall be determined after thoroughly examining the general building plans and by actual measurements during construction to avoid conflicts with any Structural, Architectural, or other trades, with all locations subject to the approval of the Engineer.

B. Verify with the Engineer all locations of conduit, boxes, etc., stubbed in the floor prior to installation.

3.9 IDENTIFICATION AND SIGNS

A. Mark each individual motor controller, disconnect switch, transformer and remote control device to identify each item with its respective service using engraved nameplates.

B. Provide nameplates with engraved lettering not less than 3/8" high where specified or noted. In general, use white core laminated plastic, attached with screws. Embossed plastic adhesive tape is not acceptable. Flush mounted devices may have identification engraved in the device plate.

C. Identify panelboards, transformers and cabinets by engraved nameplates with descriptions indicated on the Drawings together with indication of the location of the feeder overcurrent protection. Install on inside of hinged doors or panelboards and cabinets.

Example: Panel 2P
120/208V, 3-phase, 4-wire
Fed from Panel MDP/cct. #4

D. Provide warning signs on all equipment or devices operating at 300 volts or more, reading "DANGER-480 VOLTS", etc. with white letters on red background of standard code size. Signs shall be decals.

E. All underground utilities indicated on the Drawings shall have a 6" wide plastic marker installed continuously in the trench at 12" below grade. The marker shall have continuous markings embossed in the tape identifying the system installed, i.e., communications, telephone, power, and secured computer.

F. COLOR CODING STANDARD

1. Identify Raceways (Conduits) of Special Systems with Color Banding: Band exposed or accessible raceways of the following systems for identification. Bands shall be pre-tensioned, snap-around plastic sleeves, color adhesive marking tape, or a combination of the two. Make each color band 2" wide, completely encircling conduit, and place adjacent bands of two-color markings in contact side by side. Install bands at changes in direction, at penetrations of walls and floors (each side), at junction boxes and terminations, and at 40-foot maximum intervals. Apply the following colors:

Red	Fire Alarm Systems
Blue & Yellow	Access/Security Systems
Green & Blue	Mechanical & Electrical Supervisory Systems
Green & Yellow	Data Systems
Green	Closed Circuit TV
Orange	Sound/Intercom (including Bells)
Orange & Yellow	Telecommunications
Black	120/208 Volt Power
Blue	277/480 Volt Power

2. Identify Junction, Pull and Connection Boxes: Code-required caution sign for boxes shall be pressure sensitive, self-adhesive label indicating system voltage in black, preprinted on orange background. Install on outside of box cover. Also label box covers with identity of contained circuits. Use pressure-sensitive plastic labels at exposed locations and similar labels or plasticized card stock tags at concealed boxes.

3. Use conductors with color factory applied the entire length of the conductor except as follows under which conditions field applied color-coding methods may be used in lieu of factory-coded wire for sizes larger than No. 10 AWG:

   a. Apply colored, pressure-sensitive plastic tape in half-lapped turns for a distance of 6" from terminal points and in boxes where splices or taps are made. Apply the last two laps of tape with no tension to prevent possible unwinding. Use 1" wide tape in colors as specified. Do not obliterate cable identification markings by taping. Tape locations may be adjusted slightly to prevent such obliteration.

   b. In lieu of pressure-sensitive tape, colored cable ties may be used for color identification. Apply three ties of specified color to each wire at each terminal or splice point starting 3" from the terminal and spaced 3" apart. Apply with special tool or pliers, tighten for snug fit, and cut off excess length.

4. Power Circuit Identification: Securely fasten identifying metal tags or aluminum wraparound marking bands to cables, feeders, and power circuits in pull boxes, junction boxes, and switchboard rooms with 1/4" steel letter and number stamps with legend to correspond with designations on Drawings. If metal tags are provided, attach them with approximately 55-lb. test monofilament line or one-piece self-locking nylon cable ties.

5. Tag or Label Conductors as Follows:

   a. Future Connections: Tag or label conductors indicated to be for future connection or connection under another contract with identification indicating source and circuit numbers. Use tags of similar type and system

as under Item 4. Submit legend to both site administrator and Ron Gallegos and as applicable only to authorized Owner representative or FC&P project manager along with as-built record drawings.

b. Multiple Circuits: Where multiple branch circuits or control wiring or telecommunication/signal conductors are present in the same box or enclosure (except for three-circuit, four-wire home runs), label each conductor or cable. Provide legend indicating source, voltage, circuit number, and phase for branch circuit wiring. Phase and circuit of branch circuit wiring may be indicated by means of coded color of conductor insulation. For control and telecommunications/signal wiring, use color coding or wire/cable marking tape at terminations and at intermediate locations where conductors appear in wiring boxes, troughs, and control cabinets. Use consistent letter/number conductor designations throughout on wire/cable marking tapes. Submit legend to both site administrator and Ron Gallegos and as applicable only to authorized Owner representative or FC&P project manager along with as-built record drawings.

c. Fiber Optic Cable: All fiber optic cable shall bear factory printed cable identification markings indicating the cable is “fiber optic”.

6. Identify all receptacles and switch devices with the circuit and overcurrent protection device. Identification may be by waterproof, permanent marker on the rear of the device cover plate or as approved by the Engineer and Owner.

3.10 WARRANTY: Deliver originals of all guarantees and warranties on this portion of the work to the Engineer. Warrant all equipment, materials and workmanship for one year in accordance with the terms of the Contract.

3.11 PRODUCT HANDLING: Use all means necessary to protect Electrical materials and equipment before, during and after installation and to protect the installed work of other trades.

3.12 RECORD DRAWINGS: As part of this Contract, the Contractor shall provide a complete marked-up set of Contract Documents indicating all changes to the documents during the project construction phase to the Engineer. Changes to the Electrical System shall be documented on a set of "Record Drawings" on a daily basis.

END OF SECTION

RACEWAYS
(26 1100)

PART 1 GENERAL

1.1 RELATED WORK SPECIFIED ELSEWHERE

A. The general provisions of the Contract, including General Conditions, Supplementary General Conditions (if any) and General Requirements apply to the work specified in this section.

B. General Provisions: Section 260100.

C. Grounding: Section 264500.

PART 2 PRODUCTS

2.1 CONDUITS

A. Rigid Steel Conduit: Rigid, threaded, thick-wall with zinc-coated on the inside and either zinc-coated or coated with an approved corrosion-resistant coating on the outside.

B. Intermediate Metal Conduit (IMC): Rigid, threaded, lightweight steel, zinc-coated or coated on the outside and either zinc-coated or coated with an approved corrosion-resistant coating on the inside.

C. Rigid Non-Metallic Conduit: Schedule 40, high impact PVC with 7,000 psi tensile strength at 73.4 degrees Fahrenheit, 11,000 psi flexural strength, 8,600 psi compression strength, approved 90 degree conductors. Carlon, Triangle or approved equal.

D. Electrical Metallic Tubing (EMT): Mild steel, zinc-coated on the outside and either zinc-coated or coated with an approved corrosion-resistant coating on the inside.

E. Flexible Conduit: Commercial Greenfield, galvanized steel, with a separate grounding bond wire installed in the conduit in addition to other wires.

F. Liquid-Tight Flexible Conduit: Flexible galvanized steel tubing with extruded liquid-tight PVC outer jacket and a separate grounding conductor installed in the conduit.

G. Conduit Size: Minimum conduit size 1/2" except where specifically approved for equipment connections. Sizes not noted on the Drawings shall be as required by the NEC.

2.2 CONDUIT FITTINGS

A. Rigid Steel Conduit, IMC and EMT Fittings: Iron, steel, or die-cast only.

B. Rigid Aluminum Conduit Fittings: Malleable iron, steel or aluminum alloy. Ferrous fittings zinc-coated or cadmium plated. Aluminum alloy fittings shall

conform to the characteristics defined by UL for rigid aluminum metallic conduit and shall not contain more than 0.04 percent copper.

C. Rigid Non-metallic Conduit Fittings: Approved for the purpose and as recommended by the manufacturer.

D. Flexible Conduit Fittings (Commercial Greenfield): Either die-cast, steel, or malleable iron only with insulated throats and shall be of one of the following types:

1. Squeeze or clamp type with bearing surface contoured to wrap around the conduit and clamped by one or more screws.

2. Steel, multiple point type, for threading into internal wall of the conduit convolutions.

3. Wedge and screw type with angular in-edge fitting between the convolutions of the conduit.

E. Liquid-tight Flexible Conduit Fittings: With threaded grounding cone, a steel, nylon, or equal plastic compression ring and a gland for tightening. Either steel or malleable iron only with insulated throats and male thread and locknut or male bushing with or without "O" ring seal.

F. Connectors and Couplings: Compression type threadless fittings for rigid steel conduit or IMC not permitted. EMT couplings and connectors either die-cast, steel, or malleable iron only, "Concrete-tight" or "Raintight", and either the gland and ring compression type or the stainless steel multiple point locking type. Connectors to have insulated throats. EMT fittings using set-screws or indentations as a means of attachment are not permitted.

G. Bushings: Insulated type, designed to prevent abrasion of the wires without impairing the continuity of the conduit grounding system, for rigid steel conduit, IMC, and rigid aluminum conduit.

H. Expansion Fittings: Each conduit that is buried in or rigidly secured to the building construction on opposite sides of a building expansion joint and each run of 100 feet of exposed conduit shall be provided with an expansion fitting. Expansion fittings shall be hot dipped galvanized malleable iron with factory-installed packing and a grounding ring.

I. Sealing Fittings: Threaded, zinc or cadmium coated, cast or malleable iron type for steel conduits and threaded cast aluminum type for aluminum conduits. Fittings used to prevent passage of water vapor shall be of the continuous drain type.

2.3 WIREWAYS: Square D Company square duct lay in type without knockouts with lengths and fittings hinged to provide an unobstructed wireway to "lay-in" conductors, use standard lengths. Field cuts permitted where absolutely necessary. Rust-inhibiting phosphatizing coating on sheet metal parts. Blue-gray baked enamel finish. Hardware plated to prevent cross fittings, transposition section, gussett brackets, nipples, pull boxes, reducer fittings, wall flanges, panels or cabinet flanges, elbows, ceiling and wall support brackets and supporting hardware, etc.

PART 3 EXECUTION

3.1 CONDUIT INSTALLATION

A. Conduit Systems: Rigid steel conduit, IMC, rigid non-metallic conduit or EMT unless otherwise specified.

B. Rigid Non-metallic Conduit: Install in accordance with manufacturer's recommendations. Joints shall be solvent welded. Field bends shall utilize approved bending equipment. Provide rigid steel elbows and rigid steel conduit risers on underground runs or runs in concrete. Provide a suitable bond wire in each run except low voltage communications runs. Underground runs under concrete slabs may be direct buried without concrete encasement if of approved type. Rigid non-metallic conduit is not permitted to be surface mounted in ducts, plenums or other air handling spaces. All 90 degree bends shall be rigid steel conduit. Encased conduits carrying 600 volts or more, the concrete shall be colored red using a permanent dye.

C. EMT: Not permitted underground or embedded in concrete.

D. Flexible Conduits: Use flexible conduit only for motor or equipment connections and then only to the extent of minimum lengths required for connections. Length shall not exceed 5 feet without approval from the Engineer and Owner. Install flexible conduit connections at all resilient-mounted equipment. Provide liquid-tight flexible conduit in exterior, wet or damp locations and for connections to wet pipe mechanical systems.

E. Steel Conduit in Ground: Rigid steel conduit that is not completely encased in concrete but is in contact with ground or on a vapor barrier shall be wrapped with Scotchwrap 51 half-lapped, or shall have an additional outside factory coating of polyvinyl chloride with a minimum coat thickness of 20 mils. Other PVC or Phenolic-resin epoxy coating material which is equally flexible and chemically resistant may be used providing approval by the Engineer is obtained prior to the installation.

F. Exposed Conduits: Install exposed conduit systems parallel to or at right angles to the lines of the building. Right angle bends in exposed runs shall be made with standard elbows, screw jointed conduit fittings or conduit bent to radii not less than those of standard elbows.

G. Concealed Conduits: Install conduit systems concealed unless otherwise noted. Conduit systems may be exposed in unfinished utility areas, ceiling cavities, and where specifically approved by the Engineer. Install concealed conduit systems in as direct lines as possible.

H. Conduit Openings: Protect all vertical runs of conduits or EMT terminating in the bottoms of boxes or cabinets, etc., from the entrance of foreign material prior to installation of conductors.

I. Sealing Fittings: Install where required by the NEC, where conduits pass from warm to cold locations and where otherwise indicated.

J. Sleeves for Conduit: Install sleeves for conduit where shown or as required. Conduit sleeves not used shall be plugged with recessed type plugs. Sleeve

all conduit passing through walls. Sleeves that are used shall be sealed tight with rated fire and smokeproofing compounds.

3.2 CONDUIT SUPPORTS

A. Supports: Provide supports for horizontal steel conduits and EMT not more than eight feet apart with one support near each elbow or bend and one support within one foot of each coupling, including runs above suspended ceilings.

B. Straps: Install one-hole pipe straps on conduits 1-1/2" or smaller. Install individual pipe hangers for conduits larger than 1-1/2". Spring steel fasteners with hanger rods may be used in dry locations in lieu of pipe straps.

C. Trapezes: Install multiple (trapeze) pipe hangers, Uni-Strut or approved equal, where two or more horizontal conduits or EMT run parallel and at the same elevation. Secure each conduit or EMT to the horizontal hanger member by specifically designed and approved fasteners for the system used.

D. Hanger Rods: Install 1/4" diameter or larger steel rods for trapezes, spring steel fasteners, clips and clamps. Wire or perforated strapping shall not be used for the support of any conduit or EMT.

E. Fastening: Fasten pipe straps and hanger rods to concrete by means of inserts or expansion bolts, to brickwork by means of expansion bolts, and to hollow masonry by means of toggle bolts. Wooden plugs and shields shall not be used. Power-driven fasteners may be used to attach pipe straps and hanger rods to concrete where approved by the Engineer. All conduits not embedded in concrete shall be firmly secured by means of pipe clamps, hangers, etc., equal to Caddy Fasteners of ERICO Products, Inc., or approved equal. Wire wrapped around conduits and supporting members will not be accepted. Conduit fastened to the wall above the ceiling is not acceptable.

3.3 IDENTIFICATION: Identify per Section 260100-5, Paragraph 3.09F.

3.4 CLOSING OF OPENINGS: Wherever slots, sleeves or other openings are provided in floors or walls for the passage of conduits or other forms of raceway, including bus ducts, such openings, if unused, or the spaces left in such openings, shall be closed in a manner approved by the Engineer. All closure material along with installation methods shall retain the fire rating integrity of the surface being penetrated. All openings in walls or floors remaining after removal of existing conduits, raceways, or bus ducts shall be closed in a like, approved manner.

END OF SECTION

WIRES AND CABLES
(26 1200)

PART 1 GENERAL

1.1 RELATED WORK SPECIFIED ELSEWHERE

A. The general provisions of the Contract, including General Conditions, Supplementary General Conditions (if any) and General Requirements apply to the work specified in this section.

B. General Provisions: Section 260100.

C. Grounding: Section 264500.

1.2 SUBMITTALS

A. Primary Cable: Submit catalog cuts and descriptive literature, including data on conductor type, voltage rating, insulation type and thickness, jacket type and thickness (if any) and evidence of meeting respective IPCEA Standards.

PART 2 PRODUCTS

2.1 WIRES AND CABLES (600 VOLTS)

A. Type:

1. Conform to the applicable UL and IPCEA Standards for the use intended. Copper conductors with 600 volt insulation unless otherwise specified or noted on the Drawings. Stranded conductors for No. 6 and larger and where elsewhere specified or noted on the Drawings.

2. All conductors shall be copper. Aluminum conductors will be permitted only on 600 volt and above systems.

B. Insulations: Type THWN insulation unless otherwise specified or noted on the Drawings. Type THWN minimum or type XHHW filled cross-linked polyethylene 90 degree C. thermosetting insulation for conductors larger than No. 6 and elsewhere as required by NEC. 90 degrees C. minimum insulation within fixture wireways of fluorescent fixtures.

C. Size: No. 12 minimum unless otherwise specified or noted on the Drawings. Not less than NEC requirements for the system to be installed.

D. Color Coding: Phase, neutral and ground conductors color-coded in accordance with NEC. Connect all conductors of the same color to the same phase conductors.

	Phase A	Phase B	Phase C	Neutral
120/240V/1 Phase	Black	Red	-----	White
208Y/120V/3 Phase	Black	Red	Blue	White

480Y/277V/3 Phase	Brown	Orange	Yellow

*No 480/227V on site

Ground shall be Green for all systems.

E. Conductors No. 12 and 10 shall be solid color compounded for the entire length and each like color shall be connected only to the particular phase throughout the project. Conductor sizes larger than No. 10 may be color-coded at each termination and in each box or enclosure with six inches of half-lapped 3/4" pressure sensitive, plastic tape of respective colors in lieu of solid color compound.

2.2 CONTROL CONDUCTORS: Copper, minimum size No. 14 with 19/35 stranding, color-coded filled cross linked polyethylene 90 degree C. 600 volt insulation and neoprene or equal outer jacket, equal to General Electric SI-58109 or SI-58742. Multi-conductor control cables shall be provided where more than three control conductors are installed in the same conduit between common terminations. Provide two spare conductors minimum in each control cable.

2.3 COMMUNICATION AND ELECTRONIC CABLE: As required or specified in the section of these Specifications specifying the equipment. Splices shall be crimped or soldered or shall use an approved connector.

2.4 VERTICAL CABLE SUPPORTS: Split wedge type supports which clamp each individual conductor and tightens due to weight of the cable shall be used without metallic sheath.

2.5 CONNECTORS AND LUGS

A. For copper conductors No. 6 and smaller: 3M Scotch-Lok or T & B Sta-Kin, or equal compression or indent type connectors with integral or separate insulating caps.

B. For copper conductors larger than No. 6: Solderless, indent, hex screw, or bolt-type pressure connectors, properly taped or insulated.

2.6 TAPE: Plastic tape, 8.5 mils minimum thickness, 1,000,000 megohms minimum insulation resistance, oil resistant vinyl backing, oil resistant acrylic adhesive, incapable of supporting combustion per ASTM D-1000. Equal to 3-M Super 88 Tape.

2.7 FEEDER CIRCUITS: Single conductor feeder cables shall be of the size and type as indicated on the Drawings. Sizes shown are for copper conductors unless otherwise noted on Drawings.

2.8 BRANCH CIRCUITS

A. Branch circuits shall be No. 12 AWG copper minimum and shall be larger AWG size where indicated on Drawings. Where branch circuits exceed 100 ft. in length, the AWG size shall be increased to accommodate voltage drop.

B. Branch circuits to all equipment, fixtures and outlets shall include a white neutral and green wire equipment ground.

2.9 TERMINATIONS: Cold shrink stress-relief cones shall be installed at all terminations where shielded cable is used and shall be installed in strict accordance with the recommendations of Electro-Products Division/3M.

PART 3 EXECUTION

3.1 WIRE AND CABLE TESTS (600 VOLTS): Measure the insulating resistance of service entrance conductors, feeder circuit conductors and service ground. Measurements shall be taken between conductors and between conductors and ground. Resistance shall be 1,000,000 ohms or more when tested at 500 volts by megger without branch circuit loads. Tests and procedures shall meet the approval of the Engineer, and shall be in accordance with the applicable IPCEA standards for the wires and cables to be installed. Furnish all instruments, equipment and personnel required for testing, and conduct tests in the presence of the Engineer and Owners Representative. Submit written reports of the tests and results when requested by the Engineer.

3.2 SPLICES (480 VOLTS AND UNDER): Permitted only at outlets or accessible enclosures. Conductor lengths shall be continuous from termination to termination without splices unless approved by the Engineer.

3.3 PULL WIRES: In each empty conduit, except underground conduits, install a plastic line having tensile strength of not less than 200 pounds. In each empty underground conduit, install a No. 10 AWG bare, hard-drawn copper pull wire or a plastic line having a tensile strength of not less than 200 pounds.

3.4 RACEWAYS: Install in rigid conduit, EMT, or flexible metallic conduit, unless otherwise specified or noted on the Drawings.

3.5 CABLE BENDS: Radius or bends not less than ten times the outer diameter of the cable.

3.6 CONDUCTOR PULL: Conductors shall not be pulled into conduits until after all plastering or concrete work is completed and all conduits in which moisture collected have been swabbed out.

3.7 FEEDER IDENTIFICATION: Tag feeder circuits in each enclosure with wrap-around circuit designation labels.

3.8 CONNECTORS AND LUGS: Install with manufacturer's recommended tools and with the type and quantity of deformations recommended by manufacturer.

3.9 BUNDLING: Conductors No. 10 and smaller shall be neatly terminated (industry moving away from tightly bundling due to overheating interior conductors inside bundles) and conductors larger than No. 10 shall be neatly and securely cabled in individual circuits, utilizing marlin twine, two-ply lacing or nylon straps.

END OF SECTION

OUTLET BOXES
(26 1300)

PART 1 GENERAL

1.1 RELATED WORK SPECIFIED ELSEWHERE

A. The general provisions of the Contract, including General Conditions, Supplementary General Conditions (if any) and General Requirements apply to the work specified in this section.

B. General Provisions: Section 260100.

C. Grounding: Section 264500.

PART 2 PRODUCTS

2.1 OUTLET BOXES

A. Construction: Zinc-coated or cadmium plated sheet steel boxes of a class to satisfy the conditions at each outlet except where unilet or condulet bodies are required. Knockout type with knockouts removed are required. Knockout type with knockouts removed only where necessary to accommodate the conduit entering. Square cornered, straight sided gang boxes, 4" octagon concrete rings and 4" octagon hung ceiling boxes with bars may be folded type; one-piece deep-drawn for all other boxes.

B. Size: To accommodate the required number and sizes of conduits, wires and splices in accordance with NEC requirements, but not smaller than size shown or specified. Standard concrete type boxes not to exceed six inches deep except where necessary to permit entrance of conduits into sides of boxes without interference with reinforcing bars. Special purpose boxes shall be sized for the device or application indicated.

C. Fixture Studs: 3/8" malleable iron fixture stud in outlet boxes for ceiling lighting fixtures and interior bracket lighting fixtures, other than lamp receptacles and drop cords.

D. Exposed: Screw-joint type with gasketed weatherproof covers in locations exposed to the weather.

E. Tile Boxes: Rectangular in shape with square corners and straight sides for receptacles and switches mounted in furniture cabinets or in glazed tile, concrete block, marble, brick, stone or wood walls. Install without plaster rings.

F. Wall-Mounted Switch, Receptacle and Signal Boxes: Unless otherwise noted or specified not less 4" square by 1-1/2" deep for 2 devices and multi-gang boxes for more than 2 devices. Boxes for switches and receptacles on unfinished walls may be screw-joint type with covers to fit the devices.

G. Wall-mounted Telephone Outlet Boxes: 4" square by 2-1/8" deep unless otherwise noted in the Drawings.

H. Light Fixture Boxes: 4" diameter by 1-1/2" deep minimum for ceiling and interior bracket fixtures with concealed conduits. Plaster covers for bracket fixtures to have 3" diameter openings. Screw-joint boxes with canopy seat for ceiling and interior bracket fixtures with exposed conduits.

I. Grounding Terminal: Provide a grounding terminal in each box containing a green equipment ground conductor, or serving motors, lighting fixtures or receptacles. Grounding terminal shall be green colored washer-in-head machine screw or grounding bushing.

2.2 PULLBOXES: Minimum NEC requirements unless larger box is noted. As specified for outlet boxes with blank cover for pullboxes with internal volume not more than 150 cubic inches. As specified for cabinets or pullboxes with internal volume over 150 cubic inches, except covers to have same thickness as box with corrosion-resistant screw or bolt attachment.

2.3 FLOOR BOXES: Heavy duty, cast, adjustable type, suitable for the device or application intended, unless noted. Provide metal carpet flanges in carpeted areas.

PART 3 EXECUTION

3.1 OUTLET BOXES

A. Installation: Unless otherwise specified or shown on the Drawings, outlet boxes shall be flush mounted and the front edges of the boxes or plaster covers shall be flush with the finished wall or ceiling line or if installed in walls and ceiling of incombustible construction, not more than 1/4" back of same. Mount boxes with the long axes of devices vertical, unless otherwise specified. Boxes in plastered walls and ceilings shall be provided with plaster covers. Box extensions and/or covers will not be permitted. Install in a rigid and satisfactory manner with suitable metal bar hanger, box cleats, adjustable box hangers, etc. Use wood screws on wood, expansion shields on masonry and machine screws on steel work. Boxes shall be secured to metal studs with sheet metal screws. All boxes shall have far side box supports installed similar to Caddy #766.

B. Mounting Heights: The mounting height of a wall-mounted outlet box shall be construed to mean the height from the finished floor to the horizontal centerline of the cover plate. On exposed tile, block or brick construction, mount outlet boxes at the nearest bed joint to the mounting height indicated. The height of all outlets shall be at the same height when there is a secondary type wall construction along with the masonry construction. The height in the masonry construction shall be the governing factor. Verify exact height of all boxes with Engineer.

C. Wall mounted switch, receptacle and signal outlets: On columns, pilasters, etc., mount so the centers of the columns are clear for future installation of partitions. Install outlet boxes near doors or windows close to the trim. Install outlet boxes near the doors or the lock sides as shown on Architectural Drawings unless other locations are approved by the Engineer.

3.2 PULLBOXES: Provide additional pullboxes wherever necessary to meet requirements for maximum lengths of conduit runs and maximum numbers of bends as specified under "Conduit and Fittings".

3.3 FLOOR BOXES: Install level with top covers adjusted flush with finished floor or floor tile.

3.4 FIXTURE CONNECTIONS: Recessed or surface light fixtures in lay-in or accessible ceilings shall be connected with minimum 1/2" flexible metallic conduits, 4 to 6 feet long with grounding provisions.

3.5 IDENTIFICATION: Identify all exposed junction and pullboxes according to the system carried by means of painted-on stencils or labels with legible letters and contrasting colors without abbreviations. In general, use yellow color. Painting shall be in accordance with DIVISION - FINISHES.

END OF SECTION

CABINETS
(26 1330)

PART 1 GENERAL

1.1 RELATED WORK SPECIFIED ELSEWHERE

A. The general provisions of the Contract, including General Conditions, Supplementary General Conditions (if any) and General Requirements apply to the work specified in this section.

B. General Provisions

C. Grounding

PART 2 PRODUCTS

2.1 GENERAL: Sheet steel except those exposed to wet or rain conditions that shall be raintight unless otherwise noted. Cabinets without through feeder wiring shall be arranged to provide a wiring gutter not less than 4" wide for branch circuit panelboards served by feeders up to 4/0. Panelboards served by feeders in excess of 4/0, up to and including 750 MCM, shall be provided with top, bottom and side gutters 8" wide. Panelboard cabinets in all cases shall meet or exceed the minimum requirements of Article 373-6 of the National Electrical Code. Cabinets shall be of standard make and shall be equal in all respects to those bearing the Underwriters Laboratories label. Cabinets, including boxes shall be made of galvanized steel. All outside surfaces of trim and doors shall be given a factory finish coat of No. 61 ANSI gray paint, or approved manufacturer's standard. Cabinet for telephone and communications systems shall have 5/8" exterior grade, one-face B-grade or equal plywood backboard inside with maximum height and width.

2.2 FEED THROUGH GUTTERS: Where feeders go through panelboard cabinets to serve panelboards above or beyond, the wiring gutters in panelboard cabinets shall be a minimum of 8" on sides, top and bottom.

2.3 FRONTS: One piece sheet steel frame and a hinged door with catch and lock for flush cabinets. Telephone and signal cabinets for surface mounting shall be equipped with a door hinged directly to cabinet. One piece sheet steel with 3/4" flange with all edges shaped to cover edge of box. Fronts may be secured to box by means of flathead screws with captive nuts or clamps.

2.4 DOORS: Doors shall close against a rabbet placed all around the inside edge of the frame with a close fitting joint between door and frame. The doors shall be fitted with substantial flush hinges placed not over 24" apart, nor more than 6" from ends of doors, and fastened permanently to the door and frame with flat-headed rivets or spot welds, or with concealed flush piano hinges. Fastening screws of fronts shall be set not over 24" apart. Doors over 48" in height shall be equipped with a vault hinge and a three point catch.

2.5 DOOR-IN-DOOR: Both surface and flush cabinets shall be door-in-door. The door over the interior of the cabinet shall be provided with hinges and combined lock and latch. The outside door over the cabinet gutters shall have a hinge on one side, and machine screws into threaded holes in the cabinet on the other three sides. In order to insure the rigidity of the outside door, surface type cabinets shall have a 1/2" deep lip bent over all around, with the corners welded and grounded; or in the case of flush cabinets, a steel angle frame, equivalent in strength to the bent over lip, shall be welded to the inside of the door. The outside door shall be of such size as to allow a minimum of 2-3/4" opening to all four sides of the wiring gutter. All locks shall be keyed alike.

2.6 LOCKS: Furnish each cabinet with a combination catch and flat key lock. The telephone, electrical and signal cabinet locks shall be fitted to separate keying for each system. Furnish two keys for each cabinet.

2.7 GROUND BAR: Each cabinet for a panelboard shall be provided with a copper interior ground bar suitably braced or bolted to the cabinet wall. The equipment ground bar shall be equivalent in current carrying pressure connector terminations for the associated feeders, branch circuits, etc.

PART 3 EXECUTION

3.1 CABINETS: Cables installed in the wiring gutters of cabinets shall be neatly bundled, routed and supported. Minimum bending radii as recommended by the cable manufacturer shall not be reduced. Lighting and power cabinets shall be installed with tops 6'-6" above floor and bottoms not less than 12" above floor. The height above floor of the highest over current device handle shall not exceed 6'-6".

END OF SECTION

WIRING DEVICES
(26 1400)

PART 1 GENERAL

1.1 RELATED WORK SPECIFIED ELSEWHERE

A. The general provisions of the Contract, including General Conditions, Supplementary General Conditions (if any) and General Requirements apply to the work specified in this section.

B. General Provisions

C. Grounding

PART 2 PRODUCTS

2.1 SNAP SWITCHES: Unless otherwise specified each snap switch (flush tumbler-toggle) shall be of the AC general use type for mounting in a single-gang spacing, fully rated 20 amperes, 120-277 volts, conforming to minimum requirements of the latest revision of the Underwriters Laboratories, Inc., UL 20, Fifth Edition, Standard Snap Switches and further requirements herein specified. Specification grade, heavy duty, single pole, three way or four way, of the maintained momentary or lock type as indicated on the Drawings. Ivory color handles unless otherwise indicated on the drawings. Silver or silver alloy contacts, AC 120/277 volt general use snap switches shall be capable of withstanding tests as outlined in NEMA Publication WDI-1956, and shall be as follows unless otherwise noted:

20A120-277V AC	Hubbell	Bryant	P & S
1P	1221-I-IV	4901-I-IV	20-AC-1-I-IV
2P	1222-I-IV	4902-I-IV	20-AC-2-I-IV
3 way	1223-I-IV	4903-I-IV	20-AC-2-I-IV
4 way	1224-I-IV	4904-I-IV	20-AC-3-I-IV

2.2 RECEPTACLE

A. General: Configuration and requirements for all connector or outlet receptacles shall be in accordance with NEMA Publication WDI-1965, Part 3 and Part 10. Single or duplex as shown or noted on Drawings. Ivory color unless otherwise noted on the drawings. Double grip contacts for each prong.

B. Grounding Type: All receptacles shall be spec grade grounding type with a green colored hexagonal equipment ground screw of adequate size to accommodate an insulated grounding jumper (based on Table 250.122 of the NEC with minimum size No. 12 AWG). Grounding terminals of all receptacles shall be internally connected to the receptacle mounting yoke.

C. Unless otherwise noted, receptacles shall be as follows:

Type	Hubbell	Bryant	P&S
Spec. Grade Duplex - 20 amp	5362-I	5362-I	5362-I
GFCI, Spec. Grade Duplex - 20 amp	GF-5362-I	GFR53FT-I	2091-FI
Isolated Gnd., Orange, Spec. Grade Duplex - 20 amp	IG-5361	5361-IG	IG5366-SS
Safety Receptacle, Duplex	SG-62HI	SG-62	SG-62

D. Special: Receptacles for special applications shall be as indicated on the Drawings.

2.3 PLUG CAPS: Except for duplex receptacles and cleaning combination receptacles one matching plug cap shall be provided for each receptacle. No plug caps are required for duplex receptacles.

2.4 DEVICE PLATES

A. General: Provide device plates for each switch, receptacle, signal and telephone outlet and special purpose outlet. Do not use sectional gang plates. Provide multi-gang outlet plates for multi-gang boxes. Plates shall be Stainless Steel unless otherwise noted.

B. Exposed: Plates for exposed joint fittings shall match the fittings with edges of plates flush with edges of fittings. Heavy cadmium steel plates with gasket. Plates for cast type boxes at locations subject to wet or rain conditions shall be of cast, vapor tight type, in use covers. Provide hinged lift covers for devices.

C. Communication: Plates for telephone and signal outlets shall each have a 3/8" bushed opening in the center. Wall plates for push-button and buzzer outlets shall have openings to suit the push buttons and buzzers.

D. Plates for special purpose outlets shall be of a design suitable for the particular applications.

2.5 CLOCK OUTLETS: Flush, single receptacle, regressed in Stainless Steel device plate.

2.6 REMOTELY CONTROLLED SWITCHES OR RELAYS: Electro-magnetically operated, mechanically held unless otherwise required. Rugged construction, substantially made, conforming to NEMA and IEEE test standards for industrial type power relays and the requirements of UL 508, Standards for Safety Lighting Control Equipment. Ratings as indicated on the drawings, suitable for the application. Contacts shall be double break, renewable, solid wiping type, silver to silver or silver Tungsten alloy, self-aligning, quick make, quick break, with a minimum inductive load rating of 20 amps. Relays shall be as manufactured by Allen-Bradley, ASCO, Cutler-Hammer, General Electric, Square D, or Cutler-Hammer, equal to ASCO mounting and enclosure.

2.7 MOMENTARY CONTACT SWITCHES: Tumbler type single pole double throw momentary contact for 3 wire connection, with OFF position when tumbler handle is in the center, similar in appearance to the conventional snap switch. Handle or key complete as indicated on the Drawings. 20 ampere at 120-277 volts for control of 30, 60, or 100 ampere remotely controlled switches or relays rated 101 amperes and above. Provide cover plates to match the finish of other conventional snap switch plates in the area. Provide nameplate to identify the circuit or equipment controlled.

2.8 TIME SWITCHES: Automatic, electronic, solid-state, single-throw, single pole, double pole or triple pole in a supplied or NEMA-1 general-purpose enclosure as indicated on the drawings. Provide 24-hour operation with at least three ON-OFF operations per 24 hours period with provisions to eliminate operations on any day or days. 30 amperes heavy-duty contact at the voltage indicated on the Drawings. Provide battery backup power supply with automatic restoration of the normal power supply.

2.9 LIGHTING CONTROL CENTER: Photo-time control of a 7 day time switch, with electronic, solid-state, time switch preventing energization of the circuit for pre-set periods for each day of the week, with provision for omitting selected days. Each control circuit shall contain a manual selector to override automatic function. Contractor circuits shall be capable of 120 amperes in-rush at 120 volt and 55 amperes at 208/277 volt. Control center shall be capable of energizing branch circuits by photo-cell control when natural lighting falls below 25 foot candles.

PART 3 EXECUTION

3.1 DEVICE PLATES: Install with alignment tolerance of 1/16" and all edges in continuous contact with wall surfaces.

END OF SECTION

MOTORS
(26 1500)

PART 1 GENERAL

1.1 RELATED WORK SPECIFIED ELSEWHERE

A. The general provisions of the Contract, including General Conditions, Supplementary General Conditions (if any) and General Requirements apply to the work specified in this section.

B. General Provisions

C. Grounding

PART 2 PRODUCTS

2.1 GENERAL: Motors will be furnished with the equipment they are intended to operate and therefore generally will be furnished under other sections of these specifications. Furnish nameplates indicating manufacturer, horsepower, phase, cycle, voltage, RPM, type of motor windings, NEMA design and type of enclosure.

2.2 SIZE: Adequate for the duty to be performed without exceeding their full rated load or safe operating temperature when the driven equipment is operating at specified capacities with ambient temperatures and altitude compensation simulating actual job conditions.

2.3 TYPE: Suitable for the application but not less than Class A insulation and continuous duty classification, based on 40 degrees C. ambient temperature with drip proof frames and totally enclosed for exterior use. Conform to design, construction and performance requirements of NEMA and the Rotating Electrical Machinery Standards of ANSI.

2.4 VOLTAGE RATING: NEMA Standard to correspond to circuit voltage serving the motor. Motors operating on 208 volt systems shall be rated 200 volts or shall be specifically wound for the voltage. Rated and covered by the plus or minus 10% rated voltage warranty for 208 volts.

PART 3 EXECUTION

3.1 INSTALLATION: In accordance with related work specified in other sections of these Specifications and standard industry practice.

END OF SECTION

MOTOR STARTERS
(26 1550)

PART 1 GENERAL

1.1 RELATED WORK SPECIFIED ELSEWHERE

A. The general provisions of the Contract, including General Conditions, Supplementary General Conditions (if any) and General Requirements apply to the work specified in this section.

B. General Provisions

C. Grounding

1.2 SUBMITTALS: Submit complete shop drawings, control diagrams and descriptive literature.

PART 2 PRODUCTS

2.1 GENERAL: Starters shall be as specified in this section unless modified by other sections of these Specifications or by details or control diagrams on the Drawings. Provide NEMA Type I general purpose enclosures, unless otherwise noted or required, with doors arranged for padlocking. Equipment starters with contactors to break each ungrounded line to the motor. Starters shall be as manufactured by General Electric, ITE, Square D, or Cutler-Hammer.

2.2 RATING: Each starter shall have a horsepower rating not less than the rating of the motor it controls. Starters and all their related component parts shall be designed and properly coordinated for the rating and characteristics of the motors furnished under the various sections of the specifications. Motor starters and overcurrent devices shall be ambient temperature compensated.

2.3 OVERLOADS: Provide ambient temperature compensated thermal overcurrent devices in each ungrounded phase. Provide a suitable reset device for resetting over current trip on the starter front. Overcurrent device ratings shall not exceed code maximums and shall be as recommended by the motor manufacturer for the application.

2.4 CONTROLS

A. Control circuit conductors shall be grounded in accordance with the NEC and shall be arranged so that an accidental ground will not start the motor.

B. Energy for control circuits and indicating lights shall be 120 volts.

C. Provide manual start-stop pushbuttons mounted in starter case unless automatic devices are shown elsewhere on Drawings or specified.

D. Automatic control devices such as thermostats float or pressure switches may control the starting and stopping of motors directly, provided the devices used are designed for the purpose and have an adequate horsepower rating. When the automatic control device does not have such a rating, a magnetic

starter shall be used, with the automatic control device actuating the pilot control circuit.

E. Starters controlled by automatic devices shall be provided with hand-off-automatic selector switch mounted on starter case and connected so motor can be manually operated regardless of the position of the automatic control device. Selector switch shall not be connected to supersede any safety device or safety interlock.

F. Provide starters with a sufficient number of auxiliary contacts (N.O. and/or N.C.) to afford the control and interlocking required. Provide additional relays if required to obtain the correct control.

PART 3 EXECUTION

3.1 GENERAL: Provide each motor with a motor starter of proper design to meet the requirements of the motor and drive.

3.2 INSTALLATION: Install and connect in accordance with related work specified in other sections of these Specifications and standard industry practice.

END OF SECTION

PANELBOARDS
(26 1600)

PART 1 GENERAL

1.1 RELATED WORK SPECIFIED ELSEWHERE

A. The general provisions of the Contract, including General Conditions, Supplementary General Conditions (if any) and General Requirements apply to the work specified in this section.

B. General Provisions

C. Cabinets

D. Motor and Circuit Disconnects

E. Fuses: Section

F. Grounding

1.2 SUBMITTALS: Submit complete shop drawings with outline dimensions, descriptive literature and complete description of the frame size, trip setting, class and interrupting rating of all overcurrent devices. Identify available space.

PART 2 PRODUCTS

2.1 GENERAL: Dead front, safety type with voltage ratings as scheduled. Panelboards shall be of the type required for the short circuit and duty ratings indicated on the drawings. Panelboards shall be as manufactured by General Electric, ITE, Square D, or Cutler-Hammer and shall be circuit breaker or fusible type as scheduled.

2.2 CABINETS: Each panelboard shall be enclosed in a single sheet metal cabinet with front doors, catches, locks, etc., as specified in Section 261330, Cabinets.

2.3 DOOR-IN-DOOR: Both surface and flush panels shall be door-in-door. The door over the interior of the panel shall be provided with hinge and combined lock and latch. The outside door over the panel gutters shall have a hinge on one side and machine screws into threaded holes in the panelboard cabinet on the other three sides. In order to insure the rigidity of the outside door, surface type panels shall have a 1/2" deep lip bent over all around with the corners welded and ground; or, in the case of flush panels a steel angle frame, equivalent in strength to the bent over lip shall be welded to the inside of the door. The outside door shall be of such size as to allow a minimum of 2-3/4" opening to all four sides of the wiring gutter or as required by NEC All locks shall be keyed alike.

2.4 BREAKERS: Molded-case or combination molded-case and current limited fuses as scheduled or required. Provide quick make and quick break toggle mechanism, inverse time trip characteristics and trip free operation on overload or short circuit. Automatic tripping shall be indicated by a handle position between the manual

OFF and ON position. Provide a trip element for each pole, a common trip bar for all poles and a single molded insulating material handle. Handle ties will not be accepted. Adjustable magnetic trip devices shall be set at the factory to the low trip setting. Provide breaker frame sizes as required for the continuous rating or the interrupting capacity, whichever is larger.

2.5 BOLTED TYPE: Circuit breaker current-carrying connections to the bus shall be of the bolted type, factory assembled. Stab in type not permitted. Provide bus bars for three phase panelboards of the sequence phased type connection and arranged for three-phase, four wire mains, unless otherwise indicated on the Drawings.

2.6 FUSIBLE SWITCH UNITS: Quick make, quick break type with external operation handle suitable for padlocking in OFF position. Provide interlock to prevent opening cover when switch is in ON position unless interlock release is operated. Provide switch frame sizes as required for the continuous rating or the interrupting capacity, whichever is larger. Fusible panelboards shall be UL rated and listed for service entrance where applicable.

2.7 SPACE ONLY: Where "Space Only" is noted on the drawings, provide necessary connectors, mounting brackets, etc., for the future insertion of an overcurrent device.

2.8 DIRECTORIES: Provide circuit directories on the inside face of the door of each panel.

2.9 LABELS: Labels for identifying the breakers shall be engraved laminated plastic strips attached by screws or phenolic buttons or small window frame type. Adhesive stick on labels alone will not be acceptable unless specifically approved.

2.10 SKIRTS: Where noted on the Drawings panelboards shall be skirted with complete metal enclosures and barriers separating the panel interior.

PART 3 EXECUTION

3.1 DIRECTORIES: Provide typewritten circuit descriptions referencing permanent room numbering assigned in lieu of the room numbering shown on the Drawings inserted in plastic holder. Text shall be able to be read entirely without moving the card.

3.2 CIRCUIT NUMBERING: Circuit numbering shown on the Drawings is based on pole position in the panelboard and not consecutive numbering.

3.3 PHASE ROTATION: Phase A, left bus; phase B, center bus; phase C, right bus (front viewing).

END OF SECTION

MOTOR AND CIRCUIT DISCONNECTS
(26 1700)

PART 1 GENERAL

1.1 RELATED WORK SPECIFIED ELSEWHERE

A. The general provisions of the Contract, including General Conditions, Supplementary General Conditions (if any) and General Requirements apply to the work specified in this section.

B. General Provisions

C. Grounding

PART 2 PRODUCTS

2.1 DISCONNECTING MEANS

A. Safety Switches: Fusible or non-fusible Type HD quick break safety switches of the sizes and capacities indicated or required. Raintight enclosures at locations exposed to the weather.

B. Separately Enclosed Motor Snap Switches: Motor snap switches may be used for motor disconnect means, controller and motor overcurrent protection when applicable. These devices shall be horsepower rated and may contain motor running overcurrent protection.

C. Safety Type Disconnecting Switches: Heavy duty, quick make, quick break type, 250 or 600 volt rating as required for the application. Number of poles and ampacity as noted or required by code. Fusible where noted with fuse clips suitable for Buss Fusetron Class R Fuses. Short circuit rating of 200,000 RMS Amperes with CV Class R rejection feature installed in fuseholders. NEMA 1 enclosures for dry locations. NEMA 3 R enclosures for wet locations or at exposed weather locations unless otherwise noted.

2.2 MANUFACTURERS

A. General Electric, ITE, Square D, or Cutler-Hammer.

PART 3 EXECUTION

3.1 DISCONNECT MEANS: Install in each location indicated on the Drawings and elsewhere as required by NEC.

END OF SECTION

FUSES
(26 1810)

PART 1 GENERAL

1.1 RELATED WORK SPECIFIED ELSEWHERE

A. The general provisions of the Contract, including General Conditions, Supplementary General Conditions (if any) and General Requirements apply to the work specified in this section.

B. General Provisions

C. Motor and Circuit Disconnect

D. Grounding

PART 2 PRODUCTS:

2.1 FUSES

A. General: Dual element, time delay type, based on heavy service, Buss Fusetron, or equal, unless otherwise noted or required for installation.

B. Current Limiting Fuses: Provide where indicated on the Drawings. For individual motor circuit protection, provide fuse sized approximately 125 percent of full load current with 100,000 amperes interrupting capacity. For non-motor feeder protection in conjunction with fused switches, install NEMA Class L fuses sized 125 percent of load current or as required for coordination with air and molded case circuit breakers, shall be furnished by the circuit breaker manufacturer.

C. Above 600 amps; Class L, "Hi-Cap" as manufactured by Bussman or approved equivalent by Chase-Shawmut or Federal Pacific.

D. Below 600 amps, as required by short circuit duty, Class K-1, "Limitron" or class K-5, "Low Peak" or Class K-5, "Fusetron" as manufactured by Bussman or approved equivalent by Chase-Shawmut or Federal Pacific.

E. All switches having current limiting fuses installed shall have a Lamicoid nameplate with white lettering on red background reading:

WARNING, REPLACE ONLY WITH CURRENT
LIMITING FUSES AS ORIGINALLY INSTALLED

2.2 COORDINATION: Coordinate the low voltage fuses required for the project to provide basic selective protection and properly coordinate with the other associated protective equipment.

PART 3 EXECUTION

3.1 COORDINATION: Coordinate the low voltage fuses required for the project to provide basic selection protection and properly coordinate with the other associated protective equipment.

3.2 SPARE FUSES: Furnish one complete spare set of each size of fuses. Deliver to the Owner in the original boxes. It shall consist of 100% fuse replacement for all fuses required for panelboards and safety switches.

END OF SECTION

RELAYS AND CONTACTORS
(26 1900)

PART 1 GENERAL

1.1 RELATED WORK SPECIFIED ELSEWHERE

A. The general provisions of the Contract, including General Conditions, Supplementary General Conditions (if any) and General Requirements apply to the work specified in this section.

B. General Requirements

C. Grounding

PART 2 PRODUCTS

2.1 GENERAL: Electromagnetically operated, mechanically held unless otherwise required. Rugged construction substantially made conforming to NEMA and IEEE test standards for industrial type power relays and the requirements of UL 508, Standards for Safety Industrial Control Equipment. Relays and contactors shall be as manufactured by General Electric, ITE, Square D, or Cutler-Hammer.

2.2 RATINGS: As indicated on the Drawings or required, suitable for the application.

2.3 CONTACTS: Double break, renewable, solid wiping type, silver to silver or silver tungsten alloy, self-aligning, quick make, quick break, with a minimum inductive load rating adequate for the load controlled, but not less than 25 amps.

2.4 ENCLOSURES: NEMA 1 for surface mounting in dry locations. Flush mounted with hinged door and flush latch where indicated. Sound-absorbing enclosures where located in or adjacent to occupied areas.

PART 3 EXECUTION

3.1 INSTALLATION: Install and connect in accordance with related work specified in other sections of these Specifications.

END OF SECTION

GROUNDING
(26 4500)

PART 1 GENERAL

1.1 RELATED WORK SPECIFIED ELSEWHERE

A. The general provisions of the Contract, including General Conditions, Supplementary General Conditions (if any) and General Requirements apply to the work specified in this section.

B. General Provisions

C. Raceways

D. Outlet Boxes

E. Wires and Cables

F. Wiring Devices

G. Cabinets

H. Motor and Circuit Disconnects

I. Panelboards

PART 2 PRODUCTS

2.1 Materials, equipment and devices related to the grounding system are specified under other sections of these Specifications.

PART 3 EXECUTION

3.1 GENERAL: Install two separate grounding systems, a service grounding system and an equipment grounding system. The service equipment, conduit systems, supports, cabinets, equipment, and neutral conductor shall be grounded in accordance with the minimum code requirements and as further indicated on the Drawings or as specified. Connect the two grounding systems together only at the main service equipment and at the secondary terminals of transformers creating separately derived distribution systems such as dry-type transformers.

3.2 SERVICE GROUNDING SYSTEM

A. General: The service grounding system is provided for the AC service neutral ground. Current return conductors, such as neutrals of the service entrance, feeder circuits and branch circuits, shall not be used for equipment grounding. Care must be exercised to insure that neutral bars are not bonded to the enclosures of panelboards, etc., which are not part of the main service equipment. Except for separately derived systems, the neutral conductors shall be grounded only in the main service equipment.

B. Common Ground Point: Establish one common ground point in the main service equipment by interconnecting the insulated neutral bus (or bar), the uninsulated equipment ground bus (or bar), and service grounding electrode conductor.

C. Neutral Disconnecting Means: Install a neutral disconnecting means in the main service equipment for disconnecting and isolating the neutral bus from the common ground. The disconnecting means may be disconnecting links in the interconnection between the insulated neutral and uninsulated equipment ground.

D. Neutral Bars: Provide an insulated neutral bar, separate from the uninsulated equipment ground bar, in all panelboards, transformers, starters, disconnect switches, cabinets, etc., which have neutral connections.

3.3 EQUIPMENT GROUNDING SYSTEM

A. General: Provide a complete equipment grounding system in accordance with the minimum code requirements and as further indicated on the Drawings or specified. The equipment ground (green conductor) consists of metallic connections to ground of non-current-carrying metal parts of the wiring system or apparatus connected to the system. The primary purpose of equipment grounding is to provide greater safety by limiting the electrical potential between non-current-carrying parts of the system and to provide a low impedance path to ground for possible ground fault currents.

B. Common Ground Point: Establish one common ground point as specified elsewhere in this section of the specifications for interconnection of the equipment grounding system and the service grounding electrode conductor.

C. Service Equipment Enclosure: Bond the enclosure of the main service equipment to the uninsulated equipment ground box (or bar) with a conductor or bar sized for 50% of the largest service overcurrent device.

D. Ground Bar: Provide an uninsulated equipment ground bar, separate from any insulated neutral bar, in all panelboards, starters, disconnect switches, cabinets, etc. for grounding the enclosure and for connecting other equipment ground conductors. The ground bar shall be an integrally mounted and braced bus bar in panelboards or a separately mounted bar adequately braced or bolted to the enclosure after thoroughly cleaning both surfaces to assure good contact. Provide solderless pressure connectors for all conductor terminations. Number and size of pressure connectors on equipment grounding bars as required for the termination of equipment grounding conductors. In addition to the active circuits, provide pressure connectors for all three-phase spares and spaces.

E. Conduits: Where metallic conduits terminate without mechanical connection to a metallic housing of electrical equipment by means of lock nut and bushings, provide ground bushing connected with a bare copper conductor to the ground bar in the electrical equipment. Metallic conduits containing ground wiring only shall be bonded to the ground wire at both conduit entrance and exit. Install grounding conductor in each nonmetallic conduit or duct except those used for telephone, sound, or low voltage signals and in all

flexible conduit that does not have a built-in ground conductor. Bond the conductor at both ends to the equipment grounding system.

F. Feeders and Branch Circuits: Provide a separate green insulated equipment grounding conductor for each single or three phase feeder and each branch circuit with a three phase protective device. Provide a separate green insulated equipment grounding conductor for single phase branch circuits where indicated on the Drawings. Install the required grounding conductor in the common conduit or raceway with the related phase and/or neutral conductors and connect to the box or cabinet grounding terminal. Where there are parallel feeders installed in more than one raceway each raceway shall have a green insulated equipment ground conductor installed.

G. Devices: Install a minimum No. 12 green insulated equipment bonding conductor from a grounding terminal in the respective outlet or junction box to the green ground terminal of all receptacles and through flexible conduit to all light fixture housings and other fixed equipment.

H. Motors: Install a separate green insulated equipment grounding conductor from the equipment ground bar in the motor control center or separate starter through the conduit and flexible conduit to the ground terminal in the connection box mounted on the motor. Install the grounding conductor in the common conduit or raceway with the related motor circuit conductors.

3.4 SEPARATELY DERIVED SYSTEMS: Transformers creating separately derived distribution systems, such as dry type transformers, shall utilize the equipment ground bars in the transformer enclosure for both secondary equipment ground and secondary neutral ground with separate grounding conductor extended to an approved ground electrode.

3.5 GROUNDING ELECTRODES: Two service ground electrodes shall be utilized. One shall be the main cold water metallic water piping system and the other shall be a made electrode consisting of not less than twenty feet of bare copper conductor encased along the bottom of a concrete foundation footing which is in direct contact with the earth (NEC 250-H). Make the connections to the cold water pipe inside the building at the point of entrance. The grounding electrode for separately derived systems shall be approved for the application.

3.6 GROUNDING CONDUCTORS: The grounding conductors for both service ground electrodes shall be insulated or bare copper, sized in accordance with NEC 2011 250.66, including the conductor for the made electrode. The conductors shall be continuous without joint or splice and shall be installed in conduit with the conduit bonded to the conductor at each end. Install the conductor to permit the shortest and the most direct path and terminate in the main service equipment on the common ground point. Equipment grounding conductors shall be green insulated conductors equivalent to the insulation on the associated phase conductor, but not less than Type TW. The equipment grounding conductor or straps shall be sized in accordance with NEC. Where one feeder serves a series of panelboards of transformers the equipment grounding conductor shall be continuous without splices. Grounding conductors shall not be installed through metal sheathed holes. All connections shall be available for inspection and maintenance.

3.7 GROUND CONNECTIONS: Clean surfaces thoroughly before applying ground lugs or clamps. If surface is coated the coating must be removed down to the bare metal. After the coating has been removed apply a non-corrosive approved

compound to cleaned surface and install lugs or clamps. Where galvanizing is removed from metal it shall be painted or touched up with "Galvanoz", or equal.

3.8 TESTS

A. Remove all jumpers between the equipment ground busses and the service (neutral) ground busses in the main service panel and all separately derived systems. See Section 3.02.C.

B. For each grounding system, using a megger, measure the resistance between the two ground busses at the panel where the jumper was installed. The resistance shall be greater than 10 megohms.

C. Re-connect the equipment and service bus jumpers on all systems. See Section 3.02.C.

D. For each grounding system, using a megger, measure the resistance between the two ground busses at the panel farthest away (electrically) from the panel where the jumper was installed. The resistance shall be less than 5 ohms.

E. Submit a written report to the Engineer for approval. The service shall not be energized if the test shows more than 5 ohms, unless approved by the Engineer.

END OF SECTION

BALLASTS AND ACCESSORIES
(26 5020)

PART 1 GENERAL

1.1 RELATED WORK SPECIFIED ELSEWHERE

A. The general provisions of the Contract, including General Conditions, Supplementary General Conditions (if any) and General Requirements apply to the work specified in this section.

B. Grounding

C. Lighting Equipment

D. Lamps

PART 2 PRODUCTS

2.1 GENERAL: Ballast shall be supplied for the voltage that the fixture is connected to. All ballast shall be high power factor and UL listed.

A. Ballasts: Fluorescent ballasts shall be energy savings type and shall be usable with energy savings lamps so that the ballast/lamp system shall be capable of providing 6000 average initial lumens for two lamps at 75 watts of system input. Ballast performance with such lamps shall be certified by ETL or approved equal laboratory with a United States Government Registered Certification Mark for fluorescent lamp ballast. Performance certification with such lamps shall be according to component test method and appear on ballast nameplate; the relative light output shall be 95% with a tolerance of +5% to -2-1/2% and input watts shall be 78 watts with a tolerance of 5%. The ballast case temperature shall not exceed 90 degree C. Ballast shall be UL listed, Class P, Premium. Mercury vapor, metal halide, and high-pressure sodium ballasts shall be manufactured with the following features:

1. .125 minimum thickness extruded aluminum housing with heat dissipating fins.

2. Die cast aluminum end cap closure.

3. Thermally isolated capacitor enclosed in a diecast compartment with easy access for serviceability.

4. Constant auto stabilized, high-power factor.

5. Constant Wattage, auto-stabilized, high power factor. Core and coil encapsulated in a thermally conductive Class F (155 degree C.), insulation material which isolates sound attenuating vibration.

6. Stand-By feature with instant incandescent light from energizing or re-energizing of current to 70% of rated output of HID lamp.

2.2 MANUFACTURERS: Advance, General Electric, Jefferson, Universal, Halo, Prescolite, or approved equal for function specified.

PART 3 EXECUTION

3.1 All ballasts shall be installed within specific fixtures in a manner so as to assure completely silent operation with attainment of maximum ballast life as specified by the manufacturer.

END OF SECTION

CITY OF SANTA FE

PUBLIC WORKS DEPT.
FACILITIES DIVISION

GENOVEVA CHAVEZ COMMUNITY CENTER

3221 W. RODEO ROAD, SANTE FE, NM

CIP #507N

NATATORIUM DEHUMIDIFICATION SYSTEM REMODELING

BID & PERMIT SET

VICINITY MAP

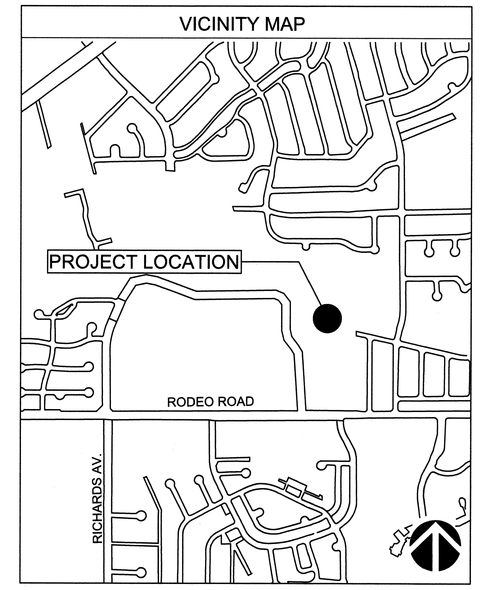

DRIVING DIRECTIONS:
FROM THE ST. FRANCIS DR. EXIT AT I-25 HEAD NORTH ON ST. FRANCIS DR. TO THE FIRST LIGHT AT SAWMILL ROAD. TAKE SAWMILL ROAD WEST TO RODEO ROAD. TAKE RODEO ROAD WEST. AFTER THE LIGHT AT AVENIDA DE LAS CAMPANAS, MERGE INTO THE RIGHT DECELERATION AT TURN NORTH INTO THE DRIVEWAY. MERGE EAST INTO THE PARKING LOT AND PROCEED STRAIGHT. TURN NORTH AT THE END OF THE LOT AND FOLLOW THE DRIVEWAY TO THE BOTTOM OF THE HILL. THE LOCATION OF WORK ON SITE IS THE FAR SOUTHEAST CORNER OF THE BUILDING.

OWNER	ENGINEER	CONTRACTOR
CITY OF SANTA FE 200 LINCOLN AVENUE PO BOX 909 SANTA FE, NM 87501 (505)955-5937	THE RESPONSE GROUP 11930 MENAUL N.E. STE. 214 ALBUQUERQUE, NM 87112 (505)323-7629	TBD

PROJECT DATA	PROJECT DATA
APPLICABLE BUILDING CODES: ***	LAND USE: CITY FACILITY – CITY OWNED LAND
CONSTRUCTION TYPE: II FR (EXISTING BLDG.)	LOCATION: 3221 W. RODEO ROAD, SANTA FE. NM
SQUARE FOOTAGE:149,487 SF	SEISMIC DESIGN CATAGORY: II–D
OCCUPANCY TYPE: ASSEMBLY (A–3)	PARKING REQ.'S: NO CHANGE
OCCUPANT LOAD: 4120	ZONING: R1
ALLOWABLE AREA: 119,600 PER FLOOR	LEGAL DESCRIPTION: SEE ATTACHED SURVEY
EXITING REQUIREMENTS: 16 – EXISTING NOT REDUCED	
PLUMBING FIXTURES: MEETS OR EXCEEDS REQUIREMENTS	
FIRE SPRINKLERS: SPRINKLERED	
HEIGHT: UL, STORIES: TWO	

*** APPLICABLE CODES
THE CONSTRUCTION INDUSTRIES DIVISION CURRENTLY ENFORCES THE FOLLOWING CODES:
- 2009 NEW MEXICO COMMERCIAL & RESIDENTIAL BUILDING CODE
- 2009 INTERNATIONAL BUILDING CODE
- 2009 INTERNATIONAL EXISTING BUILDING CODE
- 2009 INTERNATIONAL RESIDENTIAL CODE
- 2009 SOLAR ENERGY CODE (IAPMO)
- 2006 NM ENERGY CONSERVATION CODE
- ICC/ANSI A117.1–2003
- 2009 NEW MEXICO PLUMBING AND MECHANICAL CODE
- 2009 UNIFORM MECHANICAL CODE (APMO)
- 2009 UNIFORM PLUMBING CODE (IAPMO)
- 2009 UNIFORM SWIMMING POOL, SPA AND HOT TUB CODE
- 2011 NEW MEXICO ELECTRICAL CODE
- 2011 NATIONAL ELECTRICAL CODE
- 2008 NATIONAL ELECTRICAL SAFETY CODE

LIQUIFIED PETRTOLUIUM GAS STANDARDS
- 2008 NFPA 58
- 1999 NFPA 57
- 2006 NFPA 54
- 1998 NFPA 52
- 1999 NFPA 1192

APPROVALS

ROBERT CARTER, PARKS AND RECREATION DIRECTOR — DATE 2/13/15

ISAAC J. PINO P.E., PUBLIC WORKS DEPARTMENT DIRECTOR — DATE 2-16-15

DAVID PFEIFER, FACILITIES DIVISION DIRECTOR — DATE 2-13-15

JASON M. KLUCK, PUBLIC WORKS PROJECT ADMINISTRATOR — DATE 2/13/15

DAVID CHAPMAN, ADA COORDINATOR — DATE 2/16/15

INDEX OF SHEETS

SHEET NO:	DESCRIPTION
G-101	COVER SHEET, PROJECT DATA, SHEET INDEX, VICINITY MAP
S-101	STRUCTURAL FOR MECHANICAL RENOVATION PLAN
M-101	MECHANICAL DEMOLITION PLAN
M-102	MECHANICAL RENOVATION PLAN
M-601	MECHANICAL SCHEDULES AND GENERAL NOTES
E-101	ELECTRICAL POWER PLAN

THE RESPONSE GROUP, INC.
An Electrical/Mechanical Engineering Corporation
11930 Menaul N.E. Suite 214
Albuquerque, New Mexico 87112
Phone:(505) 323-7629 Fax:(505) 323-7594
E-mail: theresponsegroup@trg-inc.net

TRG JOB NO.
14129

STAMP:
PAUL A. RICKETTS
11474
REGISTERED PROFESSIONAL ENGINEER
2-12-15

G-101 - COVER SHEET

TRACT D
NORTHERN NEW MEXICO HORSEMANS ASSOC.
8.902 ACRES

1.490 AC.

ARCHEOLOGICAL SITE 386-1 WITH 30' BUFFER ZONE (EXCAVATION PENDING)

40' WIDE INGRESS & EGRESS EASEMENT PER DOC. REF. No. 16 (VACATED BY THIS INSTRUMENT)

BASIS OF BEARING
(N89°48'E 320.00')

GCCC LOT

TRACT A
SHERIFF POSSE PROPERTY
2.810 ACRES

TRACT B
RODEO DE SANTA FE
1.734 ACRES

TRACT C
COUNTY PROPERTY
9.813 ACRES

25' INGRESS EGRESS & UTILITY EASEMENT (OLD 25' TRAIL)

80' INGRESS, EGRESS & UTILITY EASEMENT (LIMITED USE) SEE NOTE No. 3

(OLD 80' WIDE MAIN ENTRANCE)

PORTION OF 5' TELEPHONE EASEMENT TO REMAIN

20' EASEMENT – A.T.&T. TRANSCONTINENTAL LINE (VACATED BY THIS INSTRUMENT)

OLD LOT LINE

BEGIN EASEMENT

TANK

FLAG POLE

20'X40' CME

DROP INLET

#4 REBAR

BLOCK WALL

CAMINO DEL BOSQUE (50' ROW)

BLOCK 22

DOC. REF. No. 8
VISTA DEL SOL UNIT No. 9

RODEO ROAD

MEDIAN

(ASPHALT SURFACE)

100' R-O-W

SECTION 4
SECTION 9

1/4 CORNER NOT FOUND

SANTA FE CONTROL MONUMENT No. 76R
ELEV. = 6682.61

HV-3 6637.02

HV-4 6648.16

HV-6 6686.12

CHISEL MARK IN CONC.

4" I.P.

SCALE : 1" = 50'

SHEET 2 of 2

HATCHED AREA INDICATES 100 YEAR FLOOD ZONE, SEE NOTE No. 6.

DENOTES SPOT ELEV. ALONG THE 100 YEAR FLOOD PLAIN

INDEXING INFORMATION FOR COUNTY CLERK				
OWNER	SECTION	TWNSHP.	RANGE	LOCATION
RODEO et.al.	4	16 NORTH	9 EAST	RODEO GROUNDS

Red Mountain Engineers, Inc.
Engineers · Surveyors · Planners
1216 PARKWAY DRIVE, SUITE A
P.O. BOX 16115, SANTA FE, NM 87506-6115
PHONE: (505) 473-7373

DRAWN BY: T. ARAGON

NAME: LOT LINE ADJUSTMENTS / RODEO GROUNDS ET.AL.

PROJECT No. 95513-101

GENERAL STRUCTURAL NOTES

1. CODES AND MANUALS:
   INTERNATIONAL BUILDING CODE, 2009 EDITION
   MINIMUM DESIGN LOADS FOR BUILDINGS AND OTHER STRUCTURES, ASCE 7-05,
   AISC MANUAL OF STEEL CONSTRUCTION, 9TH EDITION
   AWS D1.1 AND D1.3
2. GENERAL:
   A. THE CONTRACTOR SHALL VERIFY ALL DIMENSIONS IN THE FIELD.
   B. SHOP DRAWINGS, IN HARD COPY FORM, SHALL BE FURNISHED AND REVIEWED BEFORE ANY FABRICATION OR ERECTION IS STARTED.
   C. THE CONTRACTOR SHALL REVIEW AND APPROVE SHOP DRAWINGS PRIOR TO SUBMITTAL TO THE ARCHITECT FOR REVIEW. POORLY EXECUTED SHOP DRAWINGS WILL BE REJECTED AND REQUIRE RESUBMITTAL.
   D. THE CONTRACTOR SHALL BE RESPONSIBLE FOR PROVIDING SAFE AND ADEQUATE SHORING FOR ALL PARTS OF THE STRUCTURE DURING CONSTRUCTION.
   E. TEMPORARY PROVISIONS SHALL BE MADE FOR STRUCTURAL STABILITY DURING CONSTRUCTION. THE STRUCTURE SHOWN ON THE DRAWINGS HAS BEEN DESIGNED FOR STABILITY UNDER FINAL CONFIGURATION.
   F. THE CONTRACTOR SHALL COORDINATE AND VERIFY ALL OPENINGS IN FLOORS, ROOF, WALLS AND BEAMS WITH THE INDIVIDUAL TRADES.
   G. NOTCHING OR CUTTING ANY STRUCTURAL MEMBER IN THE FIELD IS PROHIBITED.
   H. NO CONCRETE PADS SHALL BE LOCATED ON ROOF UNLESS SHOWN ON STRUCTURAL DRAWINGS.
3. MATERIALS:
   A. STRUCTURAL AND MISCELLANEOUS STEEL:
      (1) ALL STRUCTURAL STEEL SHALL BE DETAILED AND FABRICATED IN ACCORDANCE WITH THE AISC "SPECIFICATION FOR THE DESIGN, FABRICATION AND ERECTION OF STRUCTURAL STEEL FOR BUILDINGS".
      (2) ALL PLATES SHALL BE ASTM A36 (Fy=36KSI).
      (3) ALL WELDING SHALL BE DONE IN ACCORDANCE WITH THE LATEST STANDARDS OF THE AWS STRUCTURAL WELDING CODE.
4. PER IBC SECTION 1704, SPECIAL INSPECTION IS REQUIRED FOR THE FOLLOWING ITEMS:
   A. WELDING:
      (1) VISUAL INSPECTION OF ALL FIELD WELDS.
      (2) NON-DESTRUCTIVE TESTING OF ALL COMPLETE PENETRATION WELDS.
   B. DUTIES AND RESPONSIBILITIES OF THE SPECIAL INSPECTOR:
      (1) THE SPECIAL INSPECTOR SHALL OBSERVE THE WORK ASSIGNED TO BE CERTAIN IT CONFORMS WITH THE APPROVED DESIGN DRAWINGS AND SPECIFICATION.
      (2) THE SPECIAL INSPECTOR SHALL FURNISH INSPECTION REPORTS TO THE BUILDING OFFICIAL, AND TO THE ENGINEER OF RECORD.
   C. SPECIAL INSPECTOR IS TO BE HIRED BY OWNER, NOT CONTRACTOR.

SCHEDULE OF STRUCTURAL SPECIAL INSPECTIONS

1. SPECIAL INSPECTIONS / TESTING - "SPECIAL STRUCTURAL INSPECTION" SHALL NOT RELIEVE THE OWNER OR THEIR AGENT FROM REQUESTING THE JURISDICTION BUILDING DEPARTMENT INSPECTIONS REQUIRED BY SECTION 110 OF THE IBC.
2. REPORTING FOR SPECIAL INSPECTION - SPECIAL INSPECTION AND TESTING REPORTS SHALL BE COMPLETED AND DISTRIBUTED AT THE COMPLETION OF EACH TASK. IF A TASK IS TO TAKE LONGER THAN (3) DAYS, PROVIDE REPORTS FOR EACH DAY. PROVIDE COPIES OF REPORTS TO: CONTRACTOR, OWNER, ARCHITECT AND STRUCTURAL ENGINEER OF RECORD. SPECIAL INSPECTOR TO KEEP A NON-COMPLIANCE LIST DOCUMENTING ITEMS INSPECTED NOT MEETING APPROVED CONSTRUCTION DOCUMENTS AND WHEN / HOW RESOLVED.
3. SEE ARCHITECTURAL, MECHANICAL, ELECTRICAL, AND PLUMBING CONSTRUCTION DOCUMENTS FOR ADDITIONAL NON-STRUCTURAL SPECIAL INSPECTION ITEMS.

IN ACCORDANCE WITH IBC CHAPTER 17, THE FOLLOWING TYPES OF WORK REQUIRE SPECIAL INSPECTIONS AND TESTING:

SPECIAL INSPECTION AND VERIFICATION OF STEEL CONSTRUCTION

SPECIAL INSPECTION REQUIRED Y/N	VERIFICATION AND INSPECTION	FREQUENCY OF INSPECTION: CONTINUOUS DURING TASK LISTED	FREQUENCY OF INSPECTION: PERIODICALLY DURING TASK LISTED	REFERENCE FOR CRITERIA: IBC SECTION	REFERENCE FOR CRITERIA: REFERENCED STANDARD
	1. MATERIAL VERIFICATION OF STRUCTURAL STEEL:				
Y	a. FOR STRUCTURAL STEEL, IDENTIFICATION MARKINGS TO CONFORM TO AISC 360	-----	X		AISC 360 SECTION M5.5
Y	b. FOR OTHER STEEL, IDENTIFICATION MARKINGS TO CONFORM TO ASTM STANDARDS SPECIFIED IN THE APPROVED CONSTRUCTION DOCUMENTS	-----	X		APPLICABLE ASTM MATERIAL STANDARDS
Y	c. MANUFACTURERS CERTIFIED TEST REPORTS	-----	X		
	2. MATERIAL VERIFICATION OF WELD FILLER MATERIALS:				
Y	a. IDENTIFICATION MARKINGS TO CONFORM TO AWS SPECIFICATION IN THE APPROVED CONSTRUCTION DOCUMENTS.	-----	-----	-----	AISC 360, SECTION A3.5
Y	b. MANUFACTURER'S CERTIFICATE OF COMPLIANCE REQUIRED.	-----	-----	-----	-----
	3. INSPECTION OF WELDING: a. STRUCTURAL STEEL :				
Y	1) COMPLETE AND PARTIAL PENETRATION GROOVE WELDS.	X	-----	1704.3.1	AWS D1.1
Y	2) MULTIPASS FILLET WELDS.	X	-----		
Y	3) SINGLE-PASS FILLET WELDS < 5/16"	-----	X		

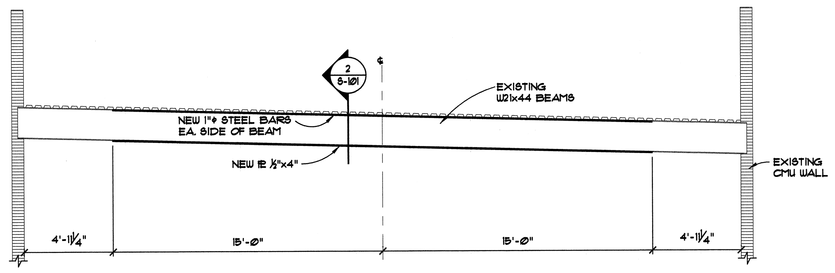

1 S-101 ELEVATION 1/4"=1'-0"

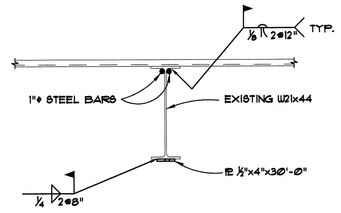

2 S-101 SECTION 3/4"=1'-0"

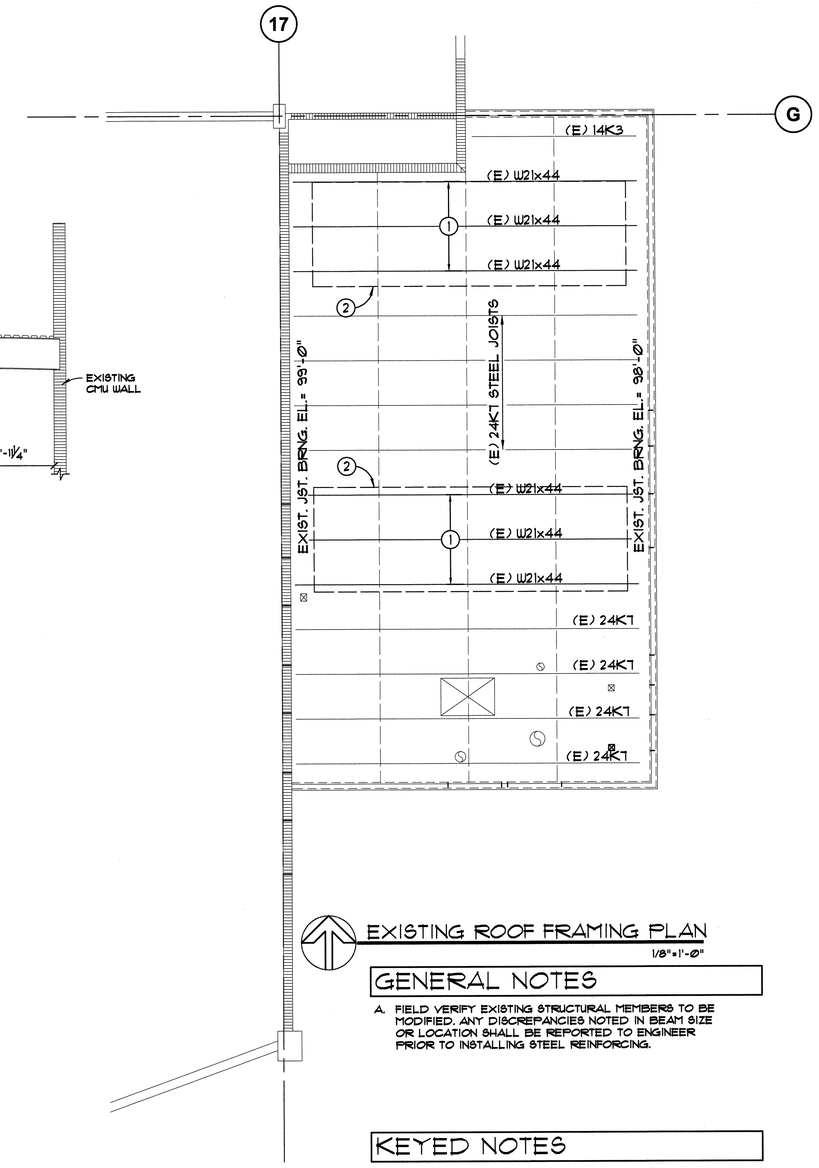

EXISTING ROOF FRAMING PLAN
1/8"=1'-0"

GENERAL NOTES

A. FIELD VERIFY EXISTING STRUCTURAL MEMBERS TO BE MODIFIED. ANY DISCREPANCIES NOTED IN BEAM SIZE OR LOCATION SHALL BE REPORTED TO ENGINEER PRIOR TO INSTALLING STEEL REINFORCING.

KEYED NOTES

1. REINFORCE EXISTING ROOF BEAM PER DETAIL 1 & 2/S-101.
2. 34,000# ALLOWABLE MECHANICAL RTU. REPLACING EXISTING UNIT.

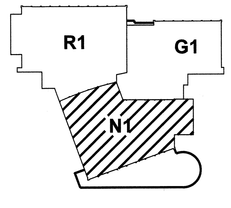

KEY PLAN

Walla ENGINEERING LTD
Structural Engineering
Civil Engineering
6501 Americas Parkway NE • Suite 301
Albuquerque • New Mexico 87110
881-3008 • Facsimile 881-4025

THE RESPONSE GROUP, INC.
An Electrical/Mechanical Engineering Corporation
11130 Menaul N.E. Suite 216
Albuquerque, New Mexico 87112
Phone:(505) 323-7400 Fax:(505) 323-7094
E-mail: thegroup@trg-inc.net

STRUCTURAL FOR MECHANICAL RENOVATION PLAN

SANTA FE COMMUNITY CENTER
NATATORIUM DEHUMIDIFICATION

	REVISION #	REVISION DATE:	PROJECT NUMBER:	14129
100% CONSTRUCTION DOCUMENTS			DRAWN BY:	BZ
			CHECK BY:	MJW
			SCALE:	AS SHOWN
			DATE:	2/20/10
14129			S-101	

S:\CLIENTS 2/19/2015 3:33 PM BZACK

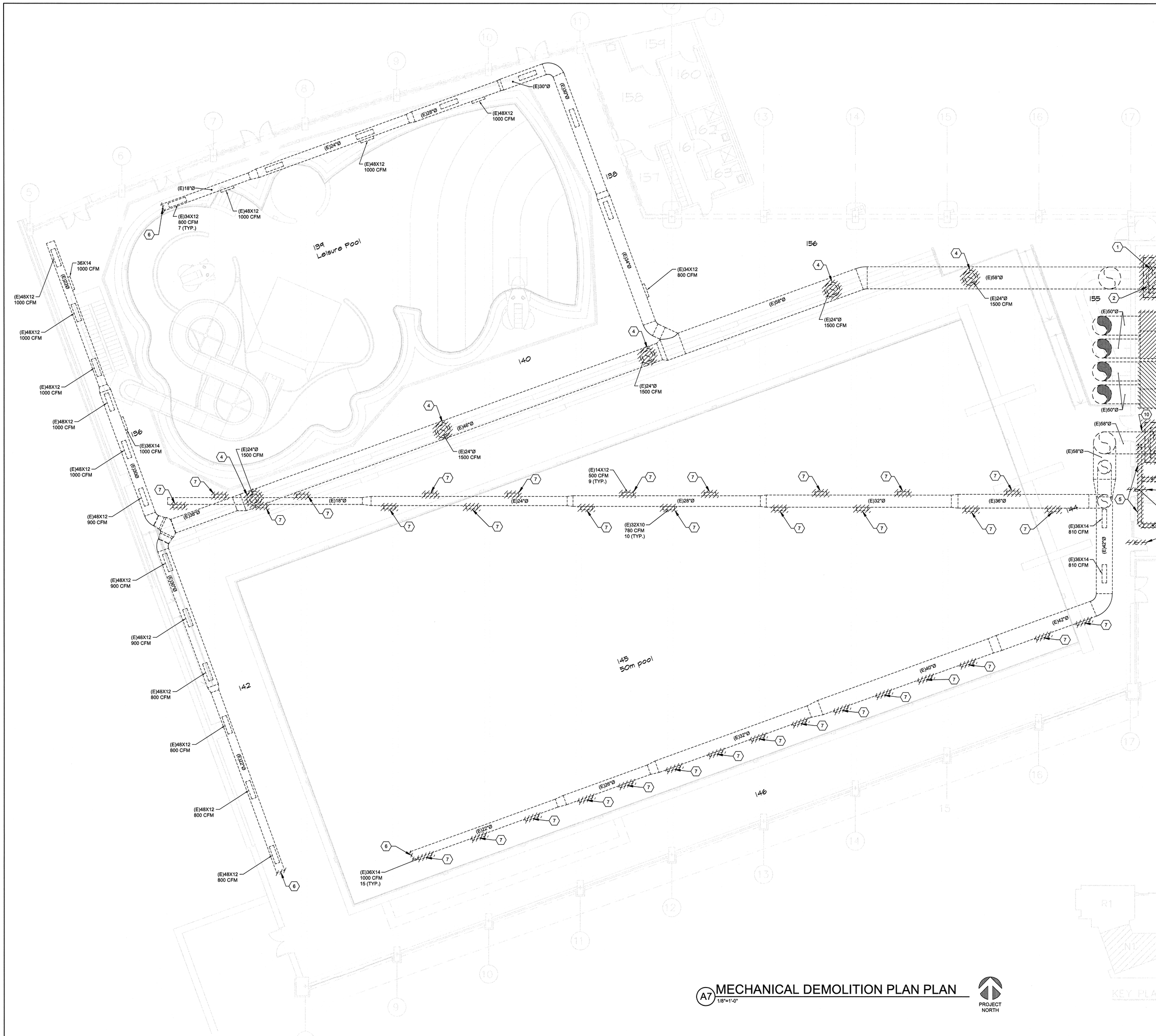

A7 MECHANICAL DEMOLITION PLAN PLAN
1/8"=1'-0"

PROJECT NORTH

MECHANICAL DEMOLITION NOTES

A. CONTRACTOR SHALL BE RESPONSIBLE FOR REPAIRING AND FINISHING SURFACES (WALLS, FLOORS, CEILINGS) DAMAGED DURING REMOVAL OF EQUIPMENT AND PIPING.

B. CONTRACTOR SHALL RETURN ALL MECHANICAL EQUIPMENT, PIPING, ETC. TO OWNER IN ACCORDANCE WITH DIRECTION OF TENANT IMPROVEMENTS. IF OWNER DOES NOT WISH TO RETAIN THE REMOVED ITEMS, CONTRACTOR SHALL THEN PROPERLY DISPOSE OF REMOVED ITEMS ACCORDINGLY.

C. EXISTING DUCT AND PIPE ROUTING, EQUIPMENT LOCATIONS ARE APPROXIMATE ONLY. EACH BIDDER SHALL SATISFY HIMSELF AS TO EXISTING BUILDING CONDITIONS BEFORE SUBMITTING THEIR BID. NO ALLOWANCE SHALL BE MADE AFTER CONTRACT IS AWARDED TO ALLOW FOR LACK OF PRE-BID INSPECTION OF BUILDING BY SUCCESSFUL BIDDER.

D. COORDINATE WORK WITH OTHER TRADES TO MINIMIZE CONFLICTS AND "DOWN TIME".

E. ALL EQUIPMENT, DUCTWORK, DIFFUSERS AND GRILLES NOT INDICATED TO BE REMOVED WITH HATCHING SHALL REMAIN.

F. FIELD VERIFY ALL DIMENSIONS AND CONDITIONS PRIOR TO COMMENCEMENT OF WORK. SHOULD ANY DISCREPANCIES BE DISCOVERED, VERIFY INTENT WITH THE ENGINEER BEFORE PROCEEDING.

G. MAINTAIN ALL MECHANICAL, ELECTRICAL, PLUMBING AND COMMUNICATION SERVICES TO OWNER'S OPERATIONAL AREAS WHILE PERFORMING WORK. PROVIDE ALL BYPASS, CROSS CONNECTS AND/OR TEMPORARY ROUTINGS AND CONNECTIONS AS REQUIRED TO INSURE FULL OPERATION OF ALL SERVICES TO ALL AREAS NOT UNDER CONSTRUCTION AT NO ADDITIONAL COST TO OWNER.

MECHANICAL GENERAL NOTES

A. REFER TO SHEET M3 FOR MECHANICAL GENERAL NOTES.

KEYED NOTES

1. EXISTING MECHANICAL POOL DEHUMIDIFIER AIR HANDLING UNIT SHALL BE REMOVED COMPLETE FOR INSTALLATION OF NEW AHU IN NEW WORK. EXISTING UNIT DRAINS SHALL BE REMOVED COMPLETE. EXISTING 2" (1320MBH) LOW PRESSURE GAS LINE CONNECTION SHALL BE DISCONNECTED AND REROUTED AND RECONNECTION TO NEW AHU UNIT IN NEW WORK.EXISTING HOT WATER SUPPLY AND HOT WATER RETURN FROM HEATING COIL SHALL BE DISCONNECTED AND ROUTED TO NEW AHU UNIT IN NEW WORK. REFER TO SHEET M2 FOR NEW WORK AND ADDITIONAL INFORMATION. FIELD VERIFY EXISTING CONDITIONS AND EXACT LOCATION OF ALL EXISTING PIPING , MECHANICAL EQUIPMENT AND DUCTWORK. COORDINATE WITH ELECTRICAL. THIS AHU UNIT SHALL REMOVED FIRST PRIOR TO REMOVING SECOND UNIT. COORDINATE WITH FACILITIES PERSONAL PRIOR TO REMOVAL AND DISCONNECTION.
2. REMOVE EXISTING SUPPLY AIR DUCTWORK AS REQUIRED FOR DEMOLITION AND FOR NEW AHU INSTALLATION REQUIREMENTS. REFER TO SHEET M2 FOR ADDITIONAL INFORMATION. THIS PORTION OF DUCT WORK SHALL BE REMOVED FIRST PRIOR TO REMOVING DUCTWORK AT SECOND UNIT. COORDINATE WITH FACILITIES PERSONAL PRIOR TO REMOVAL AND DISCONNECTION.
3. REMOVE EXISTING RETURN AIR DUCTWORK BACK TO EXTENT SHOWN AS REQUIRED FOR AHU DEMOLITION AND FOR NEW AHU UNIT INSTALLATION REQUIREMENTS. REFER TO SHEET M-102 FOR ADDITIONAL INFORMATION.THIS PORTION OF DUCT WORK SHALL BE REMOVED FIRST PRIOR TO REMOVING DUCTWORK AT SECOND UNIT. COORDINATE WITH FACILITIES PERSONAL PRIOR TO REMOVAL AND DISCONNECTION.
4. REMOVE EXISTING ROUND SUPPLY AIR DIFFUSER, AT BOTTOM OF DUCT MAIN, AND DUCT COMPLETE BACK TO MAIN SUPPLY BRANCH, CAP, AND SEAL AIRTIGHT. FIELD VERIFY EXISTING CONDITIONS AND EXACT LOCATION. PAINT DUCTWORK AS REQUIRED TO MATCH EXISTING.
5. REMOVE EXISTING SUPPLY AIR REGISTERS AND DUCT COMPLETE BACK TO MAIN SUPPLY BRANCH, CAP, AND SEAL AIRTIGHT. FIELD VERIFY EXISTING CONDITIONS AND EXACT LOCATION.
6. REMOVE END CAP OF EXISTING DUCT.
7. REMOVE EXISTING SUPPLY REGISTER, SEAL OPENING AIRTIGHT.
8. REMOVE EXISTING DOOR LOUVER. SEAL OPENING WITH NEW PANEL AND PAINT TO MATCH DOOR.
9. EXISTING MECHANICAL POOL DEHUMIDIFIER AIR HANDLING UNIT SHALL BE REMAIN OPERATIONAL DURING THE DEMOLITION OF THE FIRST AHU UNIT. CONTRACTOR SHALL PROVIDE AN ALLOWANCE FOR PRESERVATION OF BASIC FUNCTION OF THE EXISTING SOUTH AHU AND REPAIR AND REPLACE ANY INTERNAL COMPONENTS AS REQUIRED TO ENSURE THAT IT REMAINS IN OPERATION OR OPERABLE AT ALL TIMES. WITH THE EXCEPTION OF COORDINATED SHUT-DOWN PERIODS, PRIOR TO ITS REPLACEMENT. WHEN NEW EQUIPMENT IS ON SITE AND READY FOR INSTALLATION THEN THIS UNIT SHALL BE REMOVED COMPLETE FOR INSTALLATION OF NEW AHU UNIT . AT TIME OF DEMOLITION THE EXISTING UNIT DRAINS SHALL BE REMOVED COMPLETE. EXISTING 2" (1320MBH) LOW PRESSURE GAS LINE CONNECTION SHALL BE DISCONNECTED AND REROUTED AND RECONNECTION TO NEW AHU UNIT IN NEW WORK. EXISTING HOT WATER SUPPLY AND HOT WATER RETURN FROM HEATING COIL SHALL BE DISCONNECTED AND ROUTED TO NEW AHU UNIT IN NEW WORK. REFER TO SHEET M2 FOR NEW WORK AND ADDITIONAL INFORMATION. FIELD VERIFY EXISTING CONDITIONS AND EXACT LOCATION OF ALL EXISTING PIPING , MECHANICAL EQUIPMENT AND DUCTWORK. COORDINATE WITH ELECTRICAL. COORDINATE WITH FACILITIES PERSONAL PRIOR TO REMOVAL AND DISCONNECTION.
10. EXISTING SUPPLY AIR DUCTWORK SHALL REMAIN DURING THE DEMOLITION OF THE FIRST AHU UNIT. WHEN NEW EQUIPMENT IS ON SITE AND READY FOR INSTALLATION THEN THIS SUPPLY DUCTWORK SHALL BE REMOVED COMPLETE FOR INSTALLATION OF NEW AHU UNIT. REFER TO SHEET M-102 FOR ADDITIONAL INFORMATION. COORDINATE WITH FACILITIES PERSONAL PRIOR TO REMOVAL AND DISCONNECTION.

THE RESPONSE GROUP, INC.
An Electrical/Mechanical Engineering Corporation
11930 Menaul N.E. Suite 214
Albuquerque, New Mexico 87112
Phone:(505) 323-7629 Fax:(505) 323-7594
E-mail: TheResponseGroup@TRG-inc.net

MECHANICAL DEMOLITION PLAN

SANTA FE COMMUNITY CENTER
NATATORIUM DEHUMIDIFICATION

REVISION #	REVISION DATE:	PROJECT NUMBER:	14129
		DRAWN BY:	MAR
		CHECK BY:	KP/PR
		SCALE:	1/8"=1'-0"
		DATE:	02/12/15

KATHY RICKER
11474
REGISTERED PROFESSIONAL ENGINEER
14129 02/12/15

M-101

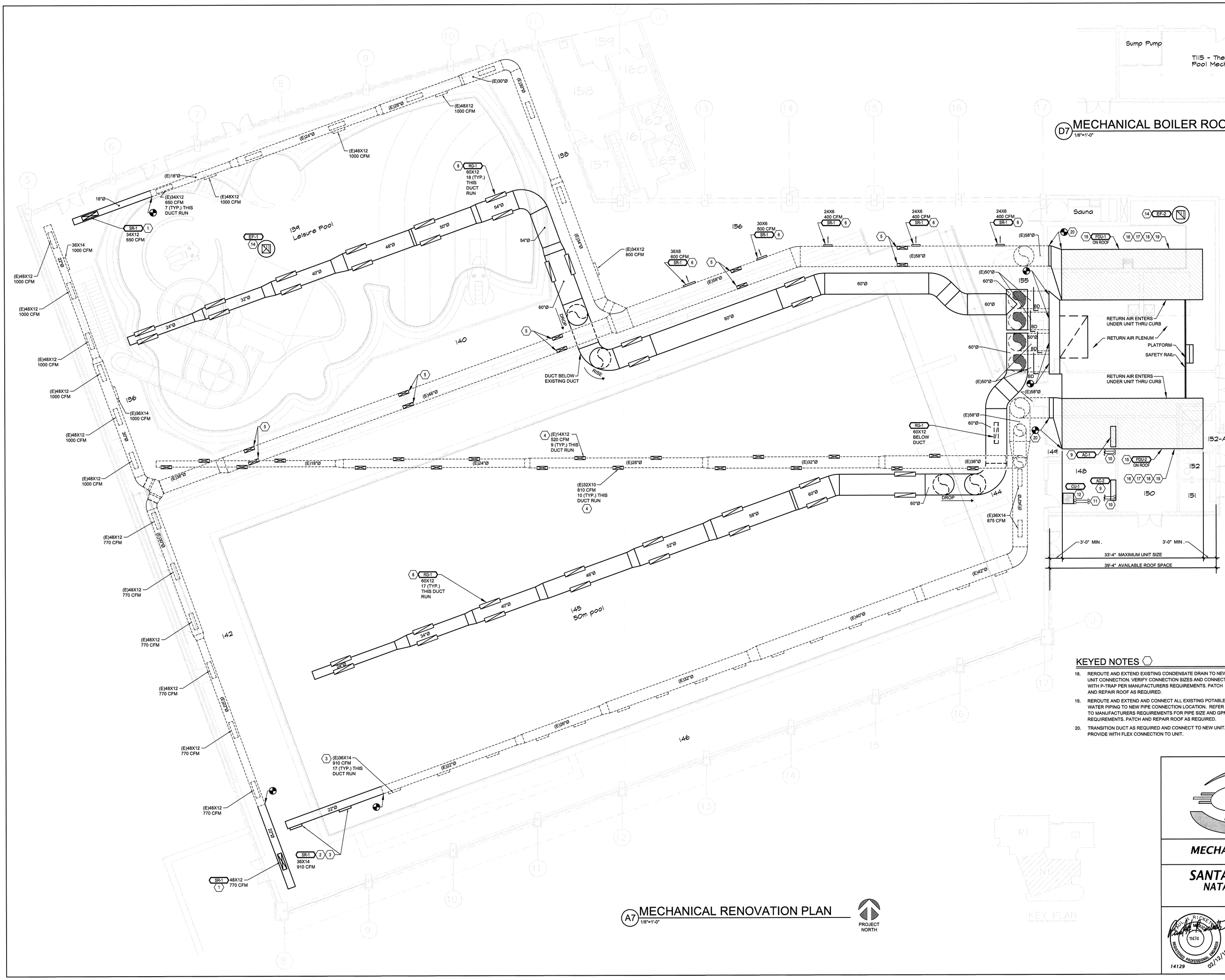

D7 MECHANICAL BOILER ROOM PLAN

1/8"=1'-0"

PROJECT NORTH

MECHANICAL GENERAL NOTES

A. REFER TO SHEET M-601 FOR MECHANICAL GENERAL NOTES.

B. BALANCE EXISTING SUPPLY REGISTERS TO CFM SHOWN.

KEYED NOTES

1. NEW SIDEWALL TYPE SUPPLY REGISTER SR-1, MOUNTED ON BOTTOM OF NEW DUCT. MOUNT AT SAME ANGLE TO MATCH EXISTING REGISTERS. SEE DETAIL ON SHEET M-601.
2. NEW SIDEWALL TYPE SUPPLY REGISTER SR-1, MOUNTED ON SIDE OF NEW DUCT. MOUNT AT SAME ANGLE TO MATCH EXISTING REGISTERS.
3. ADJUST DOWNWARD THE FACE BLADES OF REGISTER TO DISCHARGE AIR TO "WASH" THE FACE OF THE EXISTING WINDOWS.
4. NEW LOCATION OF EXISTING SIDEWALL REGISTERS ON EXISTING SUPPLY DUCT. ANGLE DISCHARGE UPWARDS AT 30 DEG., AS PER DETAIL ON SHEET M-601.
5. NEW 30"x 8" SIDEWALL SUPPLY REGISTER SR-1, 530 CFM, MOUNTED ON EXISTING SUPPLY DUCT. ANGLE DISCHARGE UPWARDS AT 30 DEG., AS PER DETAIL ON SHEET M-601.
6. NEW SIDEWALL TYPE REGISTER MOUNTED ON EXISTING SUPPLY DUCT AND SET TO DISCHARGE DOWNWARD AT 30 DEG. ANGLE. SEE DETAIL ON SHEET M-601.
7. NEW 60" DIA. RETURN AIR DUCT PLENUM. CONNECT TWO EXISTING ROUND RETURN AIR DUCTS TO BOTTOM OF PLENUM.
8. NEW 60"x 12" RETURN AIR GRILLE RG-1, MOUNTED ON TOP OF NEW DUCT AND ANGLED UPWARDS 30 DEG. SEE DETAIL ON SHEET M-601.
9. NEW AC UNIT MOUNTED 6" BELOW EXISTING CEILING.
10. REFRIGERANT PIPING, SIZED AS PER MANUFACTURER'S RECOMMENDATION, INSULATED AND ROUTED IN CEILING SPACE. SEE DETAIL ON SHEET M-601.
11. REFRIGERANT PIPING UP THROUGH EXISTING ROOF. INSULATE PIPES ON ROOF AND PROVIDE WITH ALUMINUM JACKETING. SEE DETAIL ON SHEET M-601.
12. CONDENSING UNIT CU-1 MOUNTED ON ROOF. SEE DETAIL ON SHEET M-601.
13. PROVIDE CEILING MOUNTED EXHAUST FAN. ROUTE 6"Ø EXHAUST DUCT AS SHOWN TO EXISTING ROOF PENETRATION TRANSITION AS REQUIRED AND TERMINATE WITH ROOF CAP EQUAL TO GREENHECK RC-7. COORDINATE WITH STRUCTURE. PROVIDE A ROOF JACK, STORM COLLAR AND ALL-WEATHER CAP. INTERLOCK OPERATION OF EXHAUST FAN WITH LIGHT SWITCH. REFER TO EQUIPMENT SCHEDULE, DETAILS AND ELECTRICAL DRAWINGS FOR ADDITIONAL INFORMATION. CONTRACTOR SHALL FIELD VERIFY EXACT LOCATION AND CONDITION OF EXISTING ROOF PENETRATION.
14. NEW ROOF MOUNTED EXHAUST FAN ON NEW 12" HIGH ROOF CURB. INSTALL NEW EXHAUST FAN PER POWER EXHAUST FAN DETAIL ON SHEET M3. FIELD COORDINATE AND LOCATE NEW EXHAUST FAN BETWEEN JOIST SPACING.BRACE, FLASH, SEAL AND REPAIR EXISTING ROOF AS REQUIRED FOR NEW EXHAUST FAN INSTALLATION. NEW EXHAUST FAN WILL BE INSTALLED IN NEW LOCATION A MINIMUM OF 10'-0" AWAY FROM ANY MECHANICAL AIR INTAKE. COORDINATE WITH ELECTRICAL FOR CONNECTION OF NEW FAN. ELECTRICAL TO EXTEND ELECTRICAL CONDUIT, POWER AND CONTROL WIRING AS REQUIRED TO NEW EXHAUST FAN LOCATION.
15. INSTALL NEW DEHUMIDIFICATION UNIT ON ROOF WITH MANUFACTURERS ROOF CURB. COORDINATE LOCATION WITH STRUCTURAL REINFORCEMENT. MAKE ALL REQUIRED CONNECTIONS AS REQUIRED FOR A COMPLETE OPERATING SYSTEM PER MANUFACTURERS REQUIREMENTS.
16. REROUTE AND EXTEND AND CONNECT ALL EXISTING HYDRAULIC PIPING TO NEW LOCATION OF HEATING COILS. REFER TO MANUFACTURERS REQUIREMENTS FOR PIPE SIZE AND GPM REQUIREMENTS. PATCH AND REPAIR ROOF AS REQUIRED.
17. REROUTE AND EXTEND EXISTING GAS LINE TO NEW UNIT CONNECTION. NEW UNIT IS RATED FOR 600 MBH. UPSIZE, READJUST OR REPLACE EXISTING GAS LINE/METER/REGULATOR UPSTREAM FOR A ADDITIONAL LOAD OF 1200 CFH. FIELD VERIFY EXACT METER/REGULATOR LOCATION. FOR PURPOSE OF ISOLATION AND SAFETY, AN ADDITIONAL FULL BORE GAS SHUTOFF SHALL BE INSTALLED DOWNSTREAM OF THE SERVING SUPPLIER GAS METER PRIOR TO ANY DISTRIBUTION OF GAS INTO THE PIPING SYSTEM. INCLUDING NEW AND RE-PIPE SYSTEMS. CONNECT TO UNIT WITH DIRT LEG, GAS COCK AND FLEX CONNECTION. CONNECT PER MANUFACTURERS REQUIREMENTS. PATCH AND REPAIR ROOF AS REQUIRED. COORDINATE WITH GAS COMPANY FOR EXISTING GAS LOAD.

KEYED NOTES

18. REROUTE AND EXTEND EXISTING CONDENSATE DRAIN TO NEW UNIT CONNECTION. VERIFY CONNECTION SIZES AND CONNECT WITH P-TRAP PER MANUFACTURERS REQUIREMENTS. PATCH AND REPAIR ROOF AS REQUIRED.
19. REROUTE AND EXTEND AND CONNECT ALL EXISTING POTABLE WATER PIPING TO NEW PIPE CONNECTION LOCATION. REFER TO MANUFACTURERS REQUIREMENTS FOR PIPE SIZE AND GPM REQUIREMENTS. PATCH AND REPAIR ROOF AS REQUIRED.
20. TRANSITION DUCT AS REQUIRED AND CONNECT TO NEW UNIT. PROVIDE WITH FLEX CONNECTION TO UNIT.

A7 MECHANICAL RENOVATION PLAN

1/8"=1'-0"

PROJECT NORTH

THE RESPONSE GROUP, INC.
An Electrical/Mechanical Engineering Corporation
11930 Menaul N.E. Suite 214
Albuquerque, New Mexico 87112
Phone:(505) 323-7629 Fax:(505) 323-7594
Email: TheResponseGroup@TRG-Inc.net

MECHANICAL RENOVATION PLAN

SANTA FE COMMUNITY CENTER
NATATORIUM DEHUMIDIFICATION

RALPH R. PICKE, REGISTERED PROFESSIONAL ENGINEER, 15474, 02/12/15

14129

REVISION #	REVISION DATE:	PROJECT NUMBER:	14129
		DRAWN BY:	MAR
		CHECK BY:	KP/PR
		SCALE:	1/8"=1'-0"
		DATE:	02/12/15

M-102

OF

AIR CONDITIONING UNIT SCHEDULE

MARK	SERVES	MAX CFM	COOLING CAPACITY	HEATING CAPACITY	ELECTRICAL DATA			APPROX. WT. (LBS.)	MANUFACTURER AND MODEL #
					VOLT/PHASE	HEATING POWER INPUT(KW)	MAX FUSE SIZE		
AC-1	WATER FACILITY ROOM	350	11,200 BTUH	13,700 BTUH	208/1	1KW	SEE NOTE 2	23	LG LS121HSV3
AC-2	WATER FACILITY ROOM	350	11,200 BTUH	13,700 BTUH	208/1	1KW	SEE NOTE 2	23	LG LS121HSV3

NOTES:
1. PROVIDE ALL SERVICE AND OPERATIONAL CLEARANCES AS REQUIRED, INCLUDING ALL CLEARANCES REQUIRED BY NEC ARTICLE 110.
2. ELECTRICAL DIVISION SHALL EXTEND LINE VOLTAGE ELECTRICAL SERVICE TO AC UNIT FROM ASSOCIATED CONDENSING UNIT AS REQUIRED.
3. MAXIMUM COOLING CAPACITIES ARE LISTED FOR 80°F DB / 67° F WB INDOOR, 95°F DB OUTDOOR.
4. COOLING CAPACITY LISTED FOR SEA LEVEL CONDITIONS.
5. R-410A REFRIGERANT COMPATIBLE.
6. ROUTE CONDENSATE DRAIN IN CEILING SPACE TO SINK TRAP WITH AIR GAP, AS SHOWN IN PLANS.
7. PROVIDE WITH LOCAL CONTROL SYSTEM.

ACCESSORIES:
1. 7-DAY PROGRAMMABLE WIRED CONTROLLER THERMOSTAT.
2. CLEANABLE FILTERS.
3. CONDENSATE PUMP

AIR COOLED CONDENSING UNIT SCHEDULE

MARK	SERVES	SEER	ELECTRICAL DATA			APPROX. WT. (LBS.)	MANUFACTURER AND MODEL #
			VOLT/PHASE	MCA	MOP		
CU-1	AC-1 AC-2	16	208/1	10AMP	15	75	LG LSU121HSV3

NOTES:
1. SIZE AND INSTALL REFRIGERANT PIPING BETWEEN CONDENSING UNITS AND ASSOCIATED AIR CONDITIONING UNITS ACCORDING TO MANUFACTURER'S REQUIREMENTS. PIPING SHALL NOT EXCEED LENGTH ALLOWED BY MANUFACTURER.
2. ACCESSORIES: HIGH AND LOW AMBIENT CONTROLS, WINTER START CONTROL, WIND BAFFLES, TIME DELAY RELAY, CYCLE PROTECTOR, TXV, LOW AND HIGH PRESSURE SWITCHES.
3. PROVIDE CRANKCASE HEATER AND/OR FILTER DRIER IF RECOMMENDED BY MANUFACTURER.
4. ALL CONDENSING UNIT CONTROL WIRING SHALL BE PROVIDED AND INSTALLED BY MECHANICAL DIVISION.
5. SEER RATING LISTED IS FOR CONDENSING UNIT PAIRED WITH ASSOCIATED AIR CONDITIONING OR AIR HANDLING UNIT.
6. PROVIDE ALL SERVICE AND OPERATIONAL CLEARANCES AS REQUIRED, INCLUDING ALL CLEARANCES REQUIRED BY NEC ARTICLE 110.
7. R-410A REFRIGERANT COMPATIBLE.

EXHAUST FAN SCHEDULE

MARK	SERVICE/ MOUNTING	CFM	EXT. SP.	RPM	WATTS/HP	VOLTS/ PHASE	SONES	DRIVE	MANUFACTURER AND MODEL #
CEF-1	MECHANICAL CEILING	150	0.375"	751	150 W	115/1	1.6	DIRECT	GREENHECK SP-B150
EF-1	KID POOL ROOF	5,000	0.25"	1398	1-1/2	115/1	24	DIRECT	GREENHECK CUBE-180-15
EF-2	MECHANICAL ROOM 154	500	0.25"	1445	1/2	115/1	7	DIRECT	GREENHECK G-103HP

NOTES:
1. PROVIDE ALL FANS WITH VIBRATION ISOLATION.
2. SUPPORT ALL DIRECT DRIVE FANS FROM STRUCTURE AS REQUIRED.
3. PROVIDE ALL FANS WITH BACKDRAFT DAMPERS.
4. PROVIDE EXHAUST DUCTS WITH WALL/ROOF CAPS
5. PROVIDE EACH DIRECT DRIVE FAN WITH A VARI-GREEN ECM TYPE MOTOR IF LISTED, OR WITH A SOLID-STATE SPEED CONTROLLER MOUNTED ON FAN HOUSING.
6. PROVIDE ALL INLINE FANS WITH INTERNAL SOUND ABSORBING INSULATED HOUSINGS (1/2" THICK).
7. PROVIDE ALL SERVICE AND OPERATIONAL CLEARANCES AS REQUIRED, INCLUDING ALL CLEARANCES REQUIRED BY NEC ARTICLE 110.
8. ALL FANS SHALL BE INSTALLED IN ACCESSIBLE LOCATIONS.
9. PROVIDE OVERHEAD SUPPORTS BRACKETS.

SEQUENCE OF OPERATION:
CEF-1: INTERLOCK WITH WALL THERMOSTAT
EF-1: INTERLOCK WITH WALL SWITCHES
EF-2: INTERLOCK WITH WALL SWITCHES
ELECTRICAL DIVISION SHALL PROVIDE ALL SWITCHES AND SENSORS. ELECTRICAL DIVISION SHALL BE RESPONSIBLE FOR ALL INTERLOCKS WITH OCCUPANCY SENSORS, SWITCHES AND THERMOSTATS. REFER TO ELECTRICAL DRAWINGS. CONTROLS CONTRACTOR SHALL PROVIDE AND INSTALL CONTROL WIRING. CONTROL WIRING SHALL BE PLENUM RATED OR INSIDE CONDUIT.

AIR DISTRIBUTION DEVICE SCHEDULE

SYMBOL	DESCRIPTION	MANUFACTURER AND MODEL #	MATERIAL	FINISH	REMARKS
SR-1	SIDEWALL SUPPLY REGISTER	KRUEGER 5880H OR TITUS 300FL	ALUMINUM	BAKED ENAMEL WHITE	DOUBLE DEFLECTION TYPE WITH HORIZONTAL FACE ADJUSTABLE LOUVER BLADES, 3/4" BAR SPACING, SIZE AS SHOWN ON PLANS.
RG-1	SIDEWALL RETURN AIR GRILLE	KRUEGER 5580VZ OR TITUS 3502FL	ALUMINUM	BAKED ENAMEL WHITE	FIXED HORIZONTAL BLADES ON 3/4" CENTERS, SET AT 0 DEGREES, SIZE AS SHOWN ON PLANT.

Munters — Unit Performance

General	Unit Tag	PDU-1,2		
	Unit Type	MZP		
	Model Number	PV-MZP-8730/10		
Fan Data	Type	Supply (Two Fans)	Exhaust (Two Fans)	
	Airflow (SCFM)	30,000	33,000	
	External Static Pressure (in WG)	1.8	1.8	
	Motor Horsepower (HP)	20 (each fan)	20 (each fan)	
Electrical	VOLTS/HZ/PHASE	FLA (AMPS)	MCA (AMPS)	Max Fuse (AMPS)
	460/60/3	207	216	225

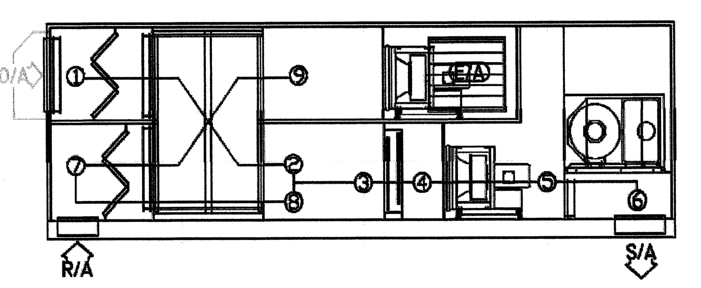

Unit layout will vary, see mechanical drawings for details.

Operating Point	Summer (DB Design)			Summer (WB Design)			Winter		
	DB (°F)	WB (°F)	CFM	DB (°F)	WB (°F)	CFM	DB (°F)	WB (°F)	CFM
1(O/A)	95	62	19,000	78.0	60.0	23,000	0	0.0	10,000
2(HX)	87.4	59.3	10,000	-	-	0	64.4	39.7	10,000
3	88.3	65.5	30,000	79.4	63.2	23,000	77.3	59.5	30,000
4(DX COIL)	71	60.6	30,000	71.8	64.9	30,000	77.3	59.5	30,000
5(FAN HEAT)	75.0	61.8	30,000	75.0	61.9	30,000	77.3	59.5	30,000
6(HEATING / S/A)	75.0	61.8	30,000	75.0	61.9	30,000	100.0	66.2	30,000
7(R/A)	84	72.4	33,000	84.0	72.4	33,000	84.0	67.2	33,000
8(RECIRC)	84	72.4	11,000	84.0	72.4	7,000	84.0	67.2	20,000
9	90	80	22,000	84	72.4	26,000	48.8	48.8	13,000

NOTES:
1. PROVIDE VIBRATION ISOLATION IN FAN SECTIONS.
2. SUPPLY FAN SHALL BE BELT DRIVE AIRFOIL PLENUM TYPE.
3. RETURN FAN SHALL BE BELT DRIVE FORWARD CURVE FAN.
4. SUPPLY AND RETURN OPENINGS SHALL BE SIZED TO MATCH SUPPLY AND RETURN DUCTS CONNECTED TO UNIT (COORDINATE).
5. MANUFACTURER SHALL PROVIDE A 6" BASE FRAME AS AN INTEGRAL PART OF THE UNIT.
6. PROVIDE UNIT DIMENSIONS ON EQUIPMENT SUBMITTAL AND COORDINATE WITH STRUCTURAL AND ARCHITECTURAL PLANS.
7. PROVIDE UNIT WITH VARIABLE FREQUENCY DRIVES ON BOTH SUPPLY AND RETURN FANS (MANUFACTURED BY ABB OR APPROVED EQUAL, FACTORY INSTALLED AND WIRED BY AIR HANDLING UNIT MANUFACTURER).
8. PROVIDE PRE FILTER SECTION ON UNIT WITH HOLDING FRAME AND MERV 8 PRE-FILTER.
9. UNIT SHALL BE OF DOUBLE WALL CONSTRUCTION WITH INSULATION (MINIMUM R-13).
10. RETURN FAN SECTION AND EXHAUST SECTION SHALL BE IN STACKED CONFIGURATION.
11. UNIT RETURN FAN/MIXING BOX SHALL HAVE MOTORIZED DAMPERS FOR BOTTOM END FRESH AIR INLET, TOP END RETURN AIR INLET, AND TOP END RELIEF.
12. RETURN AIR INLET AND OUTSIDE AIR INLET SHALL BE DUCTED.
13. RELIEF AIR OUTLET SHALL BE DUCTED TO OUTSIDE LOUVERS.
14. MOTORIZED DAMPERS TO BE FACTORY INSTALLED, DAMPER ACTUATORS TO BE PROVIDED AND INSTALLED BY CONTROLS CONTRACTOR, AND CONTROLS CONTRACTOR TO CONNECT LOW VOLTAGE POWER TO DAMPERS FROM MAIN UNIT POWER AS REQUIRED.
15. ALL DAMPERS SHALL BE ULTRA LOW LEAK AIRFOIL DESIGN.
16. PROVIDE UNIT WITH LIGHTS FOR ALL SECTIONS. LIGHTS TO BE FIELD WIRED BY ELECTRICAL DIVISION (LIGHTING POWER CONNECTION TO BE SEPARATE FROM FANS).
17. PROVIDE UNIT WITH VIEWING WINDOWS FOR MIXING BOX AND FAN SECTIONS.
18. PROVIDE UNIT WITH ACCESS DOORS FOR ALL SECTIONS. ACCESS DOORS SHALL BE HINGED AND SHALL BE OF SAME CONSTRUCTION AS THE UNIT CASING.
19. ELECTRICAL DIVISION SHALL PROVIDE SMOKE DUCT DETECTOR TO MECHANICAL DIVISION FOR INSTALLATION AT AHU SUPPLY AND RETURN DISCHARGE. DETECTORS SHALL BE INSTALLED AS REQUIRED BY CODE, WITH SMOKE DETECTION SHUTDOWN PER NFPA 90A (DETECTOR TO BE WIRED BY ELECTRICAL DIVISION TO SHUT DOWN UNIT UPON DETECTION OF SMOKE, ELECTRICAL DIVISION ALSO TO WIRE DETECTOR TO BUILDING FIRE ALARM SYSTEM AS REQUIRED).
MECHANICAL DIVISION SHALL COORDINATE DETECTOR INSTALLATION WITH AHU MANUFACTURER.
20. CONTROLS CONTRACTOR SHALL PROVIDE AND INSTALL FREEZESTAT FOR THE UNIT. WHEN FREEZESTAT TRIPS, ALLOW WATER TO CIRCULATE THROUGH THE HEATING COILS, CLOSE THE FRESH AIR DAMPER, AND STOP THE SUPPLY/RETURN FANS. FREEZESTAT SHALL BE LOCATED BETWEEN PRE HEATING COIL AND COOLING COIL SECTION.
21. PRE HEAT COIL SHALL BE NON-FREEZE TYPE.
22. CONTROLS CONTRACTOR SHALL PROVIDE UNIT WITH DDC CONTROLS PACKAGE AND CONNECT UNIT TO DDC BUILDING CONTROL SYSTEM.
23. UNIT IS SELECTED AT AN ELEVATION OF 7,500 FT ABOVE SEA LEVEL.
24. PROVIDE UNIT WITH ALL SERVICE AND OPERATIONAL CLEARANCES AS REQUIRED, INCLUDING ALL CLEARANCES REQUIRED BY NEC ARTICLE 110, AND ALL CLEARANCES TO COMBUSTIBLES (WHERE APPLICABLE).
25. DUE TO CEILING HEIGHT RESTRICTIONS, THE TOTAL HEIGHT OF THE UNIT MUST NOT EXCEED 86". IT MUST BE EQUAL TO OR LESS THAN 72" IN TOTAL HEIGHT.

MECHANICAL SYMBOL LEGEND

SYMBOL	DESCRIPTION
	EXISTING DUCTWORK
	EXISTING SUPPLY/RETURN/EXHAUST GRILLE
	EXISTING MECHANICAL EQUIPMENT
T	EXISTING THERMOSTAT
	EXISTING TO BE REMOVED
(E)	DESIGNATES EXISTING
	NEW SUPPLY/RETURN/EXHAUST GRILLE
D1, 8"Ø 200 CFM	DIFFUSER TYPE, NECK SIZE, AND CFM
	NEW SUPPLY/RETURN/EXHAUST DUCT
	NEW DUCT WITH ACOUSTICAL LINING
	NEW FLEX DUCT
	NEW MANUAL BALANCING DAMPER WITH OFFSET BRACKET AND EXTENDED PIN (OPPOSED BLADE DAMPER IN RECTANGULAR DUCT, BUTTERFLY DAMPER IN ROUND DUCT)
FSD	NEW COMBINATION FIRE/SMOKE DAMPER
12/10	DUCT WIDTH BY DUCT HEIGHT
	NEW 90 DEGREE ELBOW W/ SINGLE WIDTH TURNING VANES
r, D	NEW LONG RADIUS ELBOW (r/D = 1.5) OR NEW SHORT RADIUS ELBOW W/ TURNING VANES
	NEW MECHANICAL EQUIPMENT
T XXX	NEW ROOM THERMOSTAT
	CONNECT TO EXISTING
1	KEYED NOTE SYMBOL DESIGNATION
RTU-1	NEW EQUIPMENT SYMBOL DESIGNATION

GENERAL NOTES - MECHANICAL

A. ALL DUCT SIZES SHOWN ARE INSIDE FREE AREA DIMENSIONS. INSTALL WORK AS HIGH AS POSSIBLE AND CAREFULLY COORDINATE ALL WORK WITH STRUCTURAL, ELECTRICAL, PLUMBING, ETC.

B. PROVIDE FLEXIBLE CONNECTIONS AT ALL DUCT CONNECTIONS FOR AIR HANDLING UNITS, EXHAUST FANS, PUMPS, AND ANY OTHER EQUIPMENT WITH VIBRATION-PRODUCING COMPONENTS.

C. ALL EXHAUST FAN OUTLETS, FLUES, AND PLUMBING VENTS SHALL BE LOCATED AT LEAST 10'-0" FROM ANY OUTSIDE AIR INTAKES.

D. ALL LOW VOLTAGE CONTROL WIRING SHALL BE PROVIDED AND INSTALLED BY MECHANICAL DIVISION UNLESS NOTED OTHERWISE.

E. LOCATION OF THERMOSTATS AND ACCESS DOORS SHALL BE VERIFIED WITH ENGINEER BEFORE INSTALLATION.

F. INSULATE ALL DUCTWORK AND PIPING PER SPECIFICATIONS AND GOVERNING ENERGY CODE.

G. COORDINATE EXACT LOCATIONS AND MOUNTING HEIGHTS OF SIDEWALL GRILLES, DUCT-MOUNTED GRILLES, EXPOSED DUCTWORK, EXPOSED PIPING, LOUVERS, AND EXPOSED EXHAUST FANS WITH ENGINEER AND/OR OWNER BEFORE INSTALLATION.

H. PROVIDE INLET AND OUTLET TRANSITIONS AS REQUIRED AT EACH EXHAUST FAN, LOUVER, ROOF CAP, AIR DISTRIBUTION DEVICE, ETC.

I. PROVIDE FIRESTOP AT ALL PIPING PENETRATIONS OF FIRE RATED WALLS.

J. CLEAR SPACE ALLOWANCE FOR ALL DUCTWORK IS VERY MINIMAL AND WILL REQUIRE CAREFUL COORDINATION WITH OTHER TRADES. VERIFY ALL DIMENSIONS BOTH ON THE DRAWINGS AND ON SITE BEFORE LAYING OUT, CUTTING, AND FABRICATING THE WORK. MECHANICAL DIVISION SHALL BE RESPONSIBLE FOR ALL SHEET METAL WORK THAT IS CUT AND FABRICATED FROM THE CONTRACT DRAWINGS WITHOUT DIMENSIONAL VERIFICATION. MECHANICAL DIVISION SHALL ALSO BE RESPONSIBLE FOR ALL DUCT AND PIPE OFFSETS REQUIRED TO AVOID STRUCTURAL ELEMENTS, CHANGES IN CEILING HEIGHTS, AND ALL WORK BY OTHER TRADES.

K. VERIFY DUCT AND PIPE SIZES ON SITE PRIOR TO PURCHASING REQUIRED PRODUCTS OR PERFORMING NEW WORK. MECHANICAL CONTRACTOR SHALL BE RESPONSIBLE FOR ANY PURCHASES MADE OR WORK PERFORMED WITHOUT DIMENSIONAL VERIFICATION.

L. ALL MECHANICAL EQUIPMENT, INCLUDING (BUT NOT LIMITED TO) FAN COIL UNITS, VAV BOXES, PIPING AND COIL ACCESSORIES (SUCH AS CONTROL AND BALANCING VALVES), BALANCING DAMPERS, DUCT SMOKE DETECTORS, AND FIRE/SMOKE DAMPERS, SHALL BE ACCESSIBLE THROUGH LAY-IN CEILINGS OR ACCESS DOORS. ALL ACCESS DOORS SHALL BE PROVIDED BY MECHANICAL DIVISION TO THE GENERAL CONTRACTOR FOR INSTALLATION (LOCATIONS SHALL BE VERIFIED WITH ENGINEER PRIOR TO INSTALLATION). ACCESS DOORS TO BE INSTALLED IN RATED CHASES OR WALLS SHALL MATCH CHASE OR WALL RATINGS - VERIFY EXACT LOCATIONS REQUIRED TO PROVIDE ADEQUATE ACCESS TO ALL EQUIPMENT. ADDITIONAL ACCESS DOORS REQUIRED BEYOND THOSE INDICATED ON THE DRAWINGS SHALL BE THE RESPONSIBILITY OF MECHANICAL DIVISION.

M. PROVIDE ALL EQUIPMENT WITH ALL REQUIRED SERVICE AND OPERATIONAL CLEARANCES, INCLUDING ALL REQUIRED CLEARANCES TO COMBUSTIBLES (WHERE APPLICABLE) AND ALL CLEARANCES REQUIRED BY NEC ARTICLE 110.

N. COORDINATE WORK WITH OTHER TRADES TO MINIMIZE CONFLICTS AND "DOWN TIME".

O. ALL EQUIPMENT CAPACITIES ARE SCHEDULED FOR 6700 FT. ELEVATION.

P. ALL WORK SHALL COMPLY WITH ALL LOCAL AND NATIONAL CODES.

Q. MECHANICAL DIVISION SHALL KEEP UPDATED AS-BUILT DRAWINGS ON SITE FOR REVIEW DURING CONSTRUCTION. PROVIDE AS-BUILT DRAWINGS TO OWNER AFTER CONSTRUCTION HAS BEEN COMPLETED.

R. CONSTRUCT LOW VELOCITY/LOW PRESSURE DUCT WORK AS SPECIFIED. CONSTRUCT MED OR HIGH VELOCITY/MED OR HIGH PRESSURE DUCT WORK AS SPECIFIED.

S. CONTROLS PRICE SHALL BE INCLUDED IN MECHANICAL DIVISION PRICE.

T. ALL PIPING ROUTING IS SHOWN SCHEMATIC IN NATURE. ALL DUCT ROUTING IS SHOWN IN APPROXIMATE LOCATIONS. ALL EQUIPMENT LOCATIONS SHOWN ARE APPROXIMATE. MECHANICAL DIVISION SHALL COORDINATE ROUTING OF PIPING AND DUCTWORK AND LOCATION OF EQUIPMENT WITH ALL OTHER TRADES TO ENSURE PROPER INSTALLATION AND TO AVOID CONFLICTS.

U. MOUNT THERMOSTATS AT 48" AFF. UNLESS DEFINED OTHERWISE BY ENGINEER.

V. PROVIDE REQUIRED ACCESS TO FIRE DAMPER AND SMOKE DETECTORS. FIELD COORDINATE ACCESS LOCATION WITH ENGINEER/OWNER.

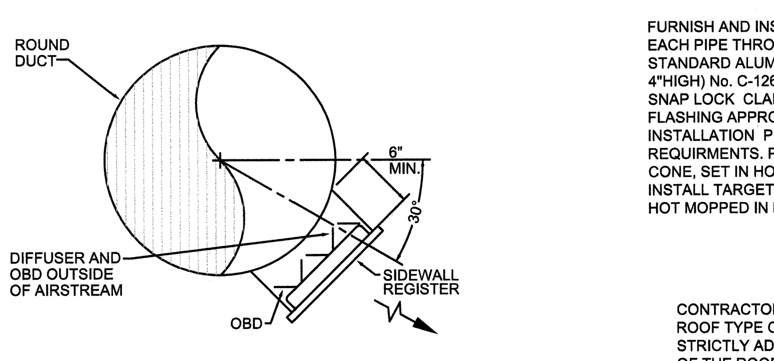

B1 ROUND DUCT DIFFUSER DETAIL
NO SCALE

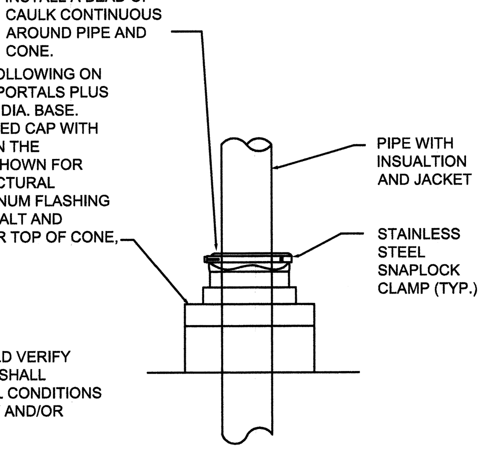

B2 PIPE THROUGH ROOF
NO SCALE

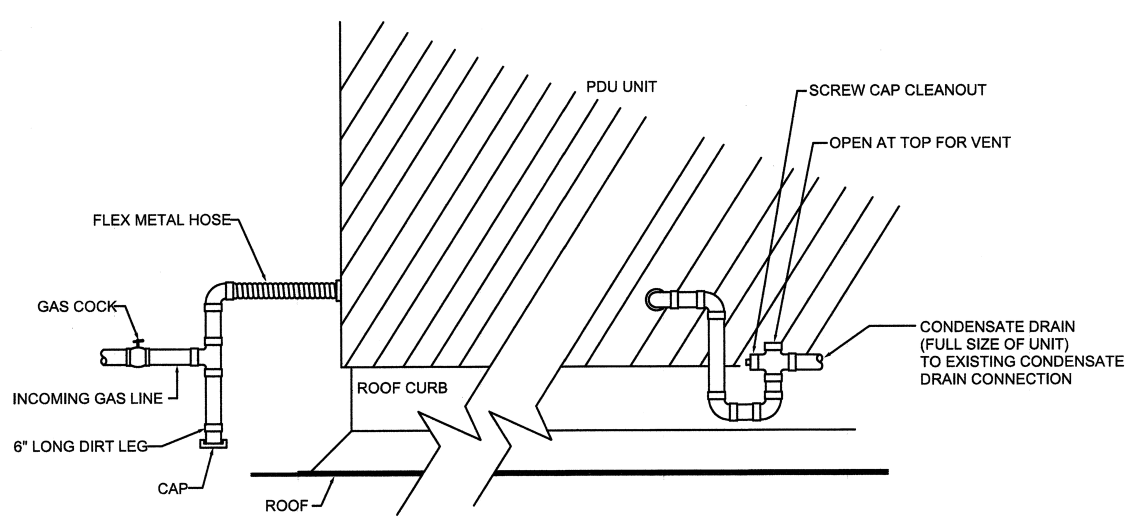

B3 UNIT PIPING DETAIL (TYPICAL ALL UNITS)
NO SCALE

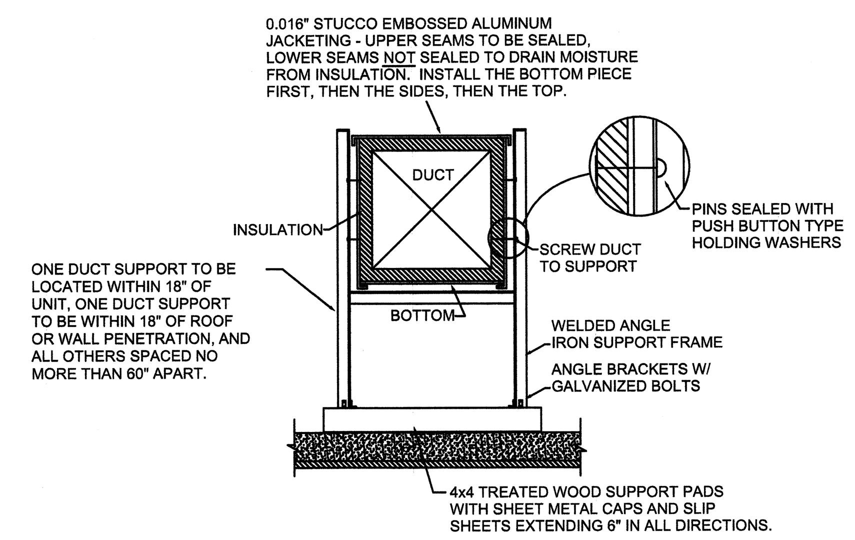

B4 DUCT SUPPORT ON ROOF DETAIL
NO SCALE

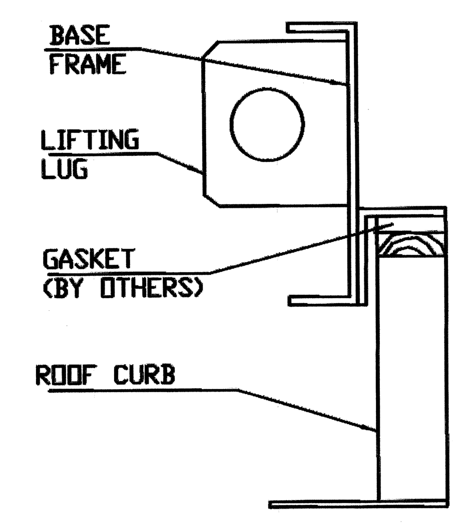

B5 POOL DEHUMIDIFIER UNIT ROOF CURB DETAIL
NO SCALE

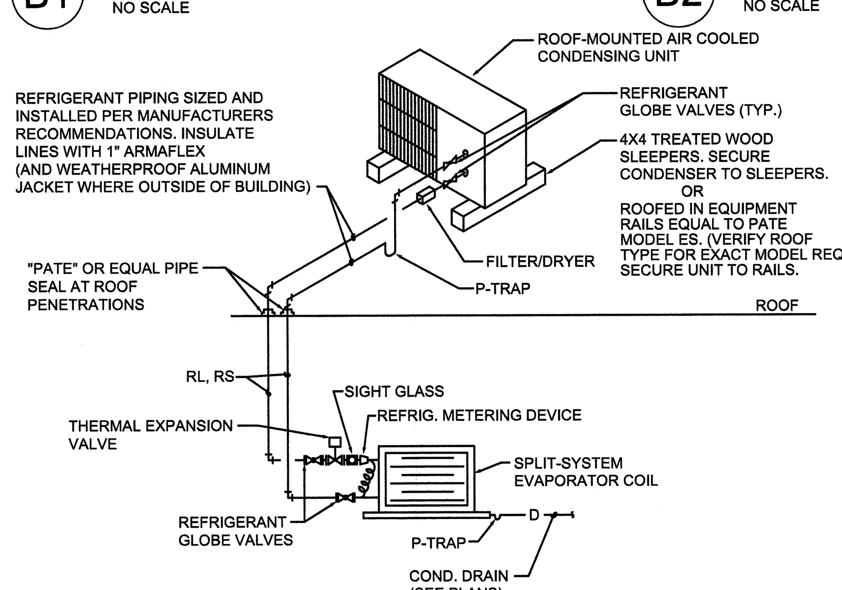

A1 CONDENSING UNIT PIPING DETAIL
NO SCALE

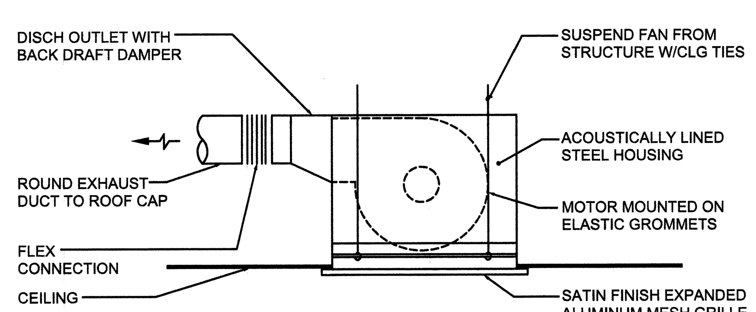

A2 CEILING EXHAUST FAN DETAIL
NO SCALE

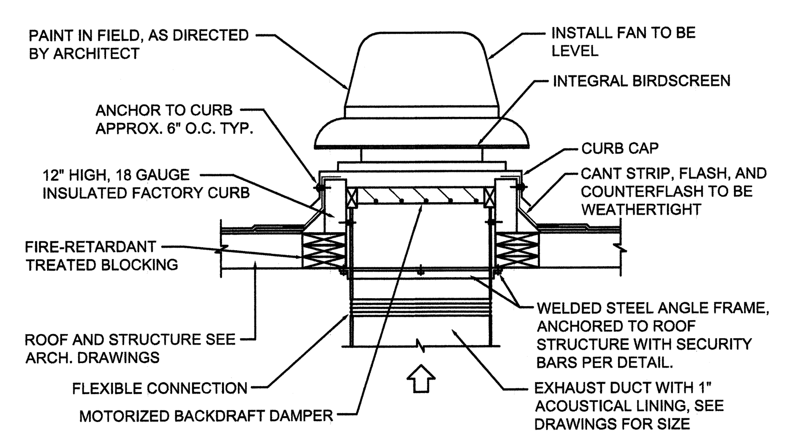

A3 POWER ROOF EXHAUST FAN DETAIL
NO SCALE

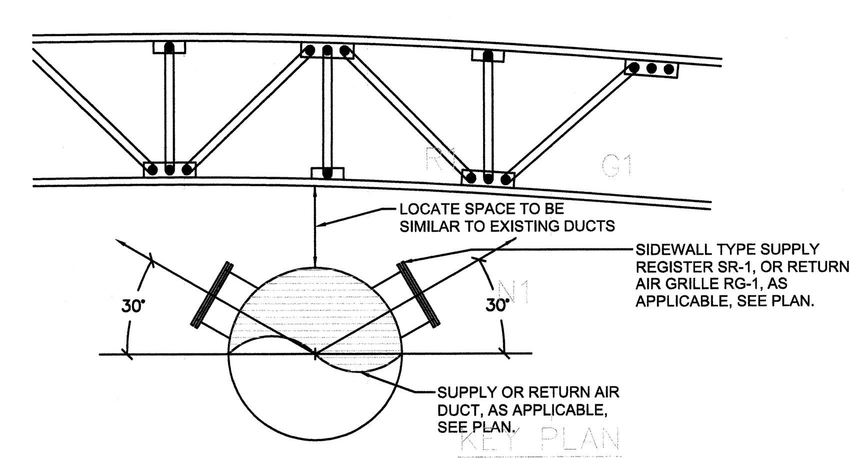

A4 POOL SUPPLY/RETURN DUCT DETAIL
NO SCALE

THE RESPONSE GROUP, INC.
An Electrical/Mechanical Engineering Corporation
11930 Menaul N.E. Suite 214
Albuquerque, New Mexico 87112
Phone:(505) 323-7629 Fax:(505) 323-7594
E-mail: TheResponseGroup@TRG-inc.net

MECHANICAL SCHEDULES AND GENERAL NOTES

SANTA FE COMMUNITY CENTER
NATATORIUM DEHUMIDIFICATION

PAUL H. RICKETTS — NEW MEXICO — 11474 — REGISTERED PROFESSIONAL ENGINEER
02/12/15
14129

REVISION #	REVISION DATE:		
		PROJECT NUMBER:	14129
		DRAWN BY:	MAR
		CHECK BY:	KP/PR
		SCALE:	1/8"=1'-0"
		DATE:	02/12/15

M-601
OF

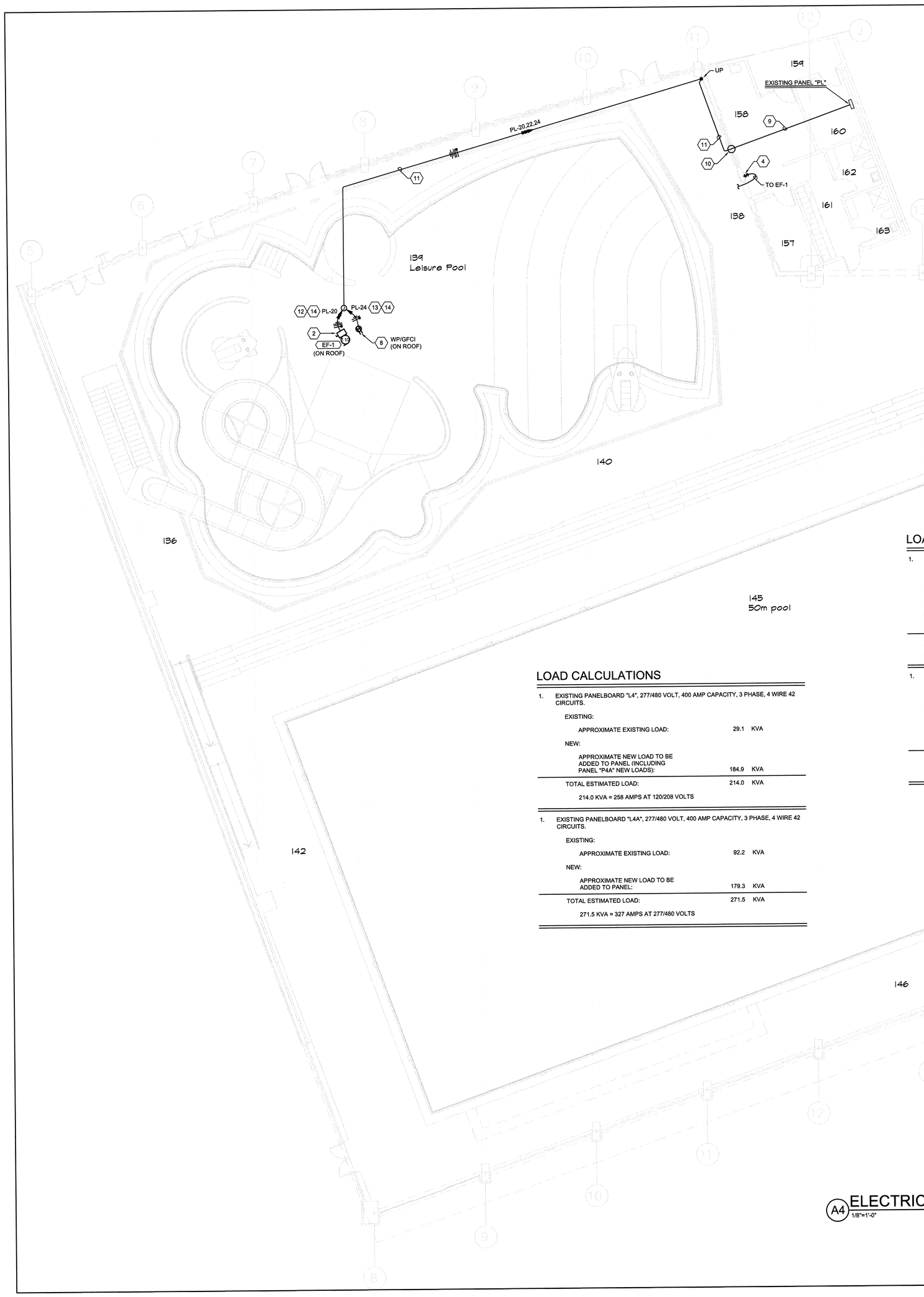

KEYED NOTES

1. PROVIDE AND INSTALL A FUSIBLE DISCONNECT SWITCH, 400 AMP, 3-POLE, 600 VOLT, SN AND GROUND LUG, RAINTIGHT ENCLOSURE. PROVIDE WITH 225 AMP FUSES. 4#4/0 AND 1#4 GROUND IN 2 1/2" CONDUIT.
2. PROVIDE AND INSTALL A FUSIBLE DISCONNECT SWITCH, 30 AMP, 2-POLE, 240 VOLT, SN AND GROUND LUG, RAINTIGHT ENCLOSURE. SIZE FUSES PER MANUFACTURER'S RECOMMENDATIONS.
3. PROVIDE AND INSTALL A FUSIBLE DISCONNECT SWITCH, 30 AMP, 2-POLE, 240 VOLT, SN AND GROUND LUG, RAINTIGHT ENCLOSURE. SIZE FUSES PER MANUFACTURER'S RECOMMENDATIONS.
4. SINGLE POLE TOGGLE SWITCH WITH PILOT LIGHT FOR CONTROL OF EXHAUST FAN. PILOT LIGHT SHALL ILLUMINATE WHEN EXHAUST FAN IS ENERGIZED. PROVIDE WITH ENGRAVED NAMEPLATE. NAMEPLATE SHALL READ "EXHAUST FAN ON-OFF".
5. JUNCTION BOX FOR THERMOSTAT(M). EXTEND 1/2" CONDUIT WITH REQUIRED CONTROL CONDUCTORS TO MECHANICAL UNIT INDICATED.
6. CONNECT TO NEAREST 120 VOLT UNSWITCHED CIRCUIT. CONTRACTOR SHALL VERIFY EXISTING CIRCUIT CAN ACCOMMODATE NEW LOAD PRIOR TO CONNECTION.
7. PROVIDE AND INSTALL A PHOTOELECTRIC TYPE DUCT DETECTOR IN THE BOTH THE SUPPLY AND RETURN DUCTS. DETECTOR SHALL BE PROVIDED BY ELECTRICAL CONTRACTOR, INSTALLED BY MECHANICAL CONTRACTOR, AND WIRED INTO THE FIRE ALARM SYSTEM BY THE ELECTRICAL CONTRACTOR. DETECTOR SHALL BE SUPPLIED WITH ANY AND ALL REQUIRED CONTROL RELAY(S) OR CONTACT(S) IN ORDER TO AUTOMATICALLY TURN-OFF THE MECHANICAL UNIT UPON RECEIPT OF ALARM SIGNAL FROM EITHER DUCT SMOKE DETECTOR. PROVIDE NEW CONDUIT AND CONTROL WIRING AS REQUIRED FOR CONNECTION TO EXISTING FIRE ALARM SYSTEM.
8. PEDESTAL MOUNT RECEPTACLE 18" ABOVE ROOF. PROVIDE STRUT SUPPORT AS REQUIRED FOR MOUNTING. SECURE STRUT SUPPORT TO ROOF STRUCTURE.
9. ROUTE CONDUIT IN CEILING SPACE.
10. CONTRACTOR SHALL CORE DRILL CONCRETE WALL FOR ROUTING OF CONDUIT.
11. SURFACE MOUNT CONDUIT TO CONCRETE WALL AND EXTEND TO CORNER. AT THE CORNER, SURFACE MOUNT THE CONDUIT UP ALONG THE COLUMN TO BUILDING ROOF STRUCTURE. AT BUILDING ROOF STRUCTURE SURFACE MOUNT CONDUIT AND EXTEND TO MECHANICAL UNIT.
12. PROVIDE AND INSTALL A NEW 20A-2P CIRCUIT BREAKER IN AVAILABLE SPACE FOR CIRCUIT INDICATED. FIELD VERIFY CIRCUIT BREAKER REQUIREMENTS.
13. PROVIDE AND INSTALL A NEW 20A-1P CIRCUIT BREAKER IN AVAILABLE SPACE FOR CIRCUIT INDICATED. FIELD VERIFY CIRCUIT BREAKER REQUIREMENTS.
14. USE #10 CONDUCTORS THROUGHOUT CIRCUIT.
15. PROVIDE AND INSTALL A NEW 30A-2P CIRCUIT BREAKER IN AVAILABLE SPACE FOR CIRCUIT INDICATED. FIELD VERIFY CIRCUIT BREAKER REQUIREMENTS.
16. DISCONNECT AND REMOVE EXISTING 200A-3P CIRCUIT BREAKER AND REPLACE WITH A NEW 225A/3P CIRCUIT BREAKER. FIELD VERIFY CIRCUIT BREAKER REQUIREMENTS.
17. EXISTING DEHUMIDIFIER UNIT IS BEING REMOVED. DISCONNECT AND REMOVE ALL CONDUIT AND CONDUCTORS FROM UNIT AND ASSOCIATED COMPONENTS BEING REMOVED. CONDUIT AND CONDUCTORS SHALL BE REMOVED BACK TO SOURCE.

LOAD CALCULATIONS

1. EXISTING PANELBOARD "PL", 120/208 VOLT, 200 AMP CAPACITY, 3 PHASE, 4 WIRE 30 CIRCUITS.

EXISTING:		
APPROXIMATE EXISTING LOAD:	22.8	KVA
NEW:		
APPROXIMATE NEW LOAD TO BE ADDED TO PANEL:	2.4	KVA
TOTAL ESTIMATED LOAD:	25.2	KVA

25.2 KVA = 70 AMPS AT 120/208 VOLTS

1. EXISTING PANELBOARD "P4A", 120/208 VOLT, 90 AMP CAPACITY, 3 PHASE, 4 WIRE 16 CIRCUITS.

EXISTING:		
APPROXIMATE EXISTING LOAD:	5.4	KVA
NEW:		
APPROXIMATE NEW LOAD TO BE ADDED TO PANEL:	5.6	KVA
TOTAL ESTIMATED LOAD:	11.0	KVA

11.0 KVA = 31 AMPS AT 120/208 VOLTS

LOAD CALCULATIONS

1. EXISTING PANELBOARD "L4", 277/480 VOLT, 400 AMP CAPACITY, 3 PHASE, 4 WIRE 42 CIRCUITS.

EXISTING:		
APPROXIMATE EXISTING LOAD:	29.1	KVA
NEW:		
APPROXIMATE NEW LOAD TO BE ADDED TO PANEL (INCLUDING PANEL "P4A" NEW LOADS):	184.9	KVA
TOTAL ESTIMATED LOAD:	214.0	KVA

214.0 KVA = 258 AMPS AT 120/208 VOLTS

1. EXISTING PANELBOARD "L4A", 277/480 VOLT, 400 AMP CAPACITY, 3 PHASE, 4 WIRE 42 CIRCUITS.

EXISTING:		
APPROXIMATE EXISTING LOAD:	92.2	KVA
NEW:		
APPROXIMATE NEW LOAD TO BE ADDED TO PANEL:	179.3	KVA
TOTAL ESTIMATED LOAD:	271.5	KVA

271.5 KVA = 327 AMPS AT 277/480 VOLTS

A4 ELECTRICAL POWER PLAN
1/8"=1'-0"

PROJECT NORTH

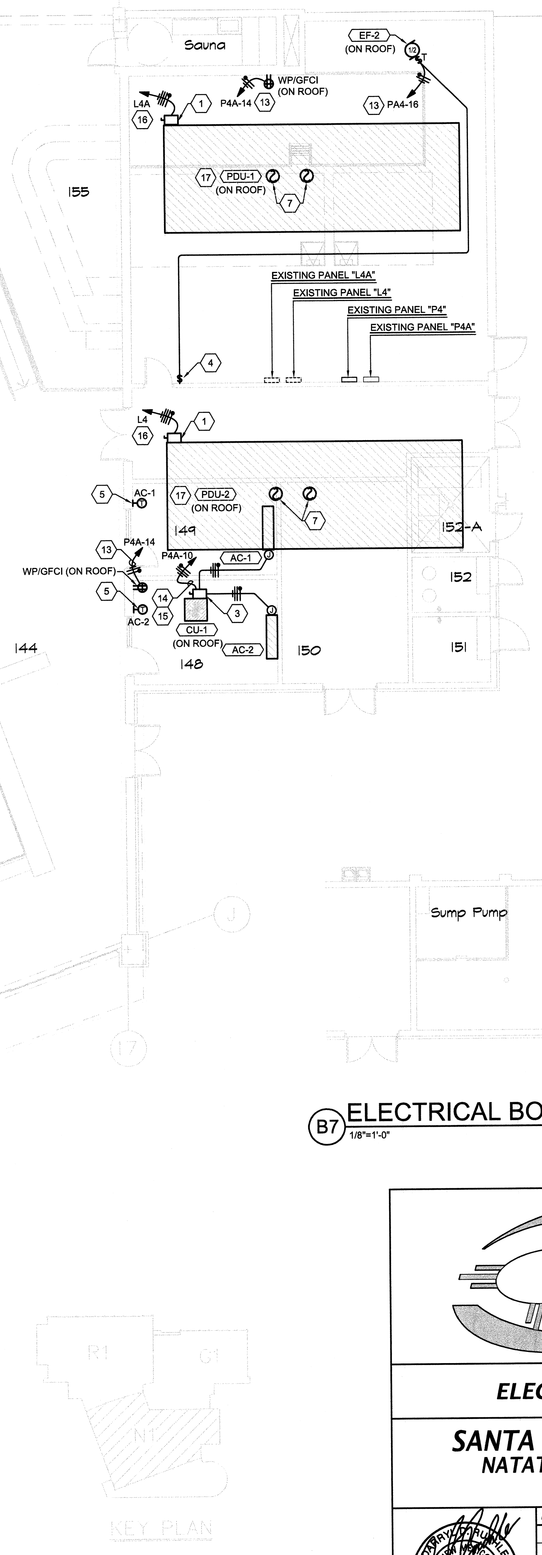

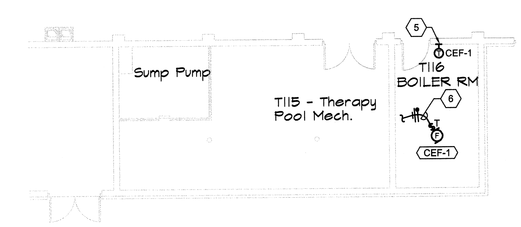

B7 ELECTRICAL BOILER ROOM PLAN
1/8"=1'-0"

PROJECT NORTH

THE RESPONSE GROUP, INC.
An Electrical/Mechanical Engineering Corporation
11930 Menaul N.E. Suite 214
Albuquerque, New Mexico 87112
Phone:(505) 323-7929 Fax:(505) 323-7394
E-mail: TheResponseGroup@TRG-inc.net

ELECTRICAL POWER PLAN

SANTA FE COMMUNITY CENTER
NATATORIUM DEHUMIDIFICATION

COPYRIGHT 2015 THE RESPONSE GROUP, INC. — NEW MEXICO 8729 — REGISTERED PROFESSIONAL ENGINEER — 02/12/15 — 14129

REVISION #	REVISION DATE:		
		PROJECT NUMBER:	14129
		DRAWN BY:	JKD
		CHECK BY:	RW / RP
		SCALE:	1/8"=1'-0"
		DATE:	02/12/15

E-101